2005 GMC Sierra Owner Manual

Seats and Restraint Systems 1-1
- Front Seats 1-3
- Rear Seats 1-9
- Safety Belts 1-11
- Child Restraints 1-33
- Airbag System 1-66
- Restraint System Check 1-82

Features and Controls 2-1
- Keys 2-3
- Doors and Locks 2-8
- Windows 2-16
- Theft-Deterrent Systems 2-19
- Starting and Operating Your Vehicle 2-21
- Mirrors 2-55
- OnStar® System 2-64
- HomeLink® Transmitter 2-66
- Storage Areas 2-70
- Sunroof 2-73
- Vehicle Personalization 2-74

Instrument Panel 3-1
- Instrument Panel Overview 3-4
- Climate Controls 3-21
- Warning Lights, Gages, and Indicators 3-31
- Driver Information Center (DIC) 3-50
- Audio System(s) 3-69

Driving Your Vehicle 4-1
- Your Driving, the Road, and Your Vehicle 4-2
- Towing 4-62

Service and Appearance Care 5-1
- Service 5-4
- Fuel 5-6
- Checking Things Under the Hood 5-12
- Rear Axle 5-58
- Four-Wheel Drive 5-58
- Front Axle 5-60
- Noise Control System 5-61
- Bulb Replacement 5-62
- Windshield Wiper Blade Replacement 5-72
- Tires 5-72
- Appearance Care 5-112
- Vehicle Identification 5-120
- Electrical System 5-121
- Capacities and Specifications 5-130

Maintenance Schedule 6-1
- Maintenance Schedule 6-2

Customer Assistance and Information 7-1
- Customer Assistance and Information 7-2
- Reporting Safety Defects 7-10

Index 1

GENERAL MOTORS, GM, the GM Emblem, GMC, the GMC Truck Emblem, and the name SIERRA are registered trademarks of General Motors Corporation.

This manual includes the latest information at the time it was printed. We reserve the right to make changes after that time without further notice. For vehicles first sold in Canada, substitute the name “General Motors of Canada Limited” for GMC whenever it appears in this manual.

Keep this manual in the vehicle, so it will be there if it is ever needed. If the vehicle is sold, leave this manual in it so the new owner can use it.

Canadian Owners

A French language copy of this manual can be obtained from your dealer or from:

Helm, Incorporated
P.O. Box 07130
Detroit, MI 48207

How to Use This Manual

Many people read the owner manual from beginning to end when they first receive their new vehicle. If this is done, it can help you learn about the features and controls for the vehicle. Pictures and words work together in the owner manual to explain things.

Index

A good place to quickly locate information about the vehicle is the Index in the back of the manual. It is an alphabetical list of what is in the manual and the page number where it can be found.

Litho in U.S.A.
Part No. 05SIERRA A First Edition

©2004 General Motors Corporation. All Rights Reserved.

Safety Warnings and Symbols

There are a number of safety cautions in this book. We use a box and the word CAUTION to tell about things that could hurt you if you were to ignore the warning.

⚠ CAUTION:

These mean there is something that could hurt you or other people.

In the caution area, we tell you what the hazard is. Then we tell you what to do to help avoid or reduce the hazard. Please read these cautions. If you do not, you or others could be hurt.

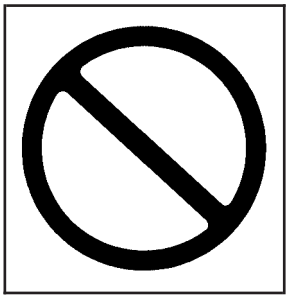

You will also find a circle with a slash through it in this book. This safety symbol means “Do Not,” “Do Not do this” or “Do Not let this happen.”

Vehicle Damage Warnings

Also, in this manual you will find these notices:

Notice: **These mean there is something that could damage your vehicle.**

A notice tells about something that can damage the vehicle. Many times, this damage would not be covered by your vehicle's warranty, and it could be costly. But the notice will tell what to do to help avoid the damage.

When you read other manuals, you might see CAUTION and NOTICE warnings in different colors or in different words.

There are also warning labels on the vehicle. They use the same words, CAUTION or NOTICE.

Vehicle Symbols

The vehicle has components and labels that use symbols instead of text. Symbols are shown along with the text describing the operation or information relating to a specific component, control, message, gage, or indicator.

If you need help figuring out a specific name of a component, gage, or indicator, reference the following topics:

- Seats and Restraint Systems in Section 1
- Features and Controls in Section 2
- Instrument Panel Overview in Section 3
- Climate Controls in Section 3
- Warning Lights, Gages, and Indicators in Section 3
- Audio System(s) in Section 3
- Engine Compartment Overview in Section 5

These are some examples of symbols that may be found on the vehicle:

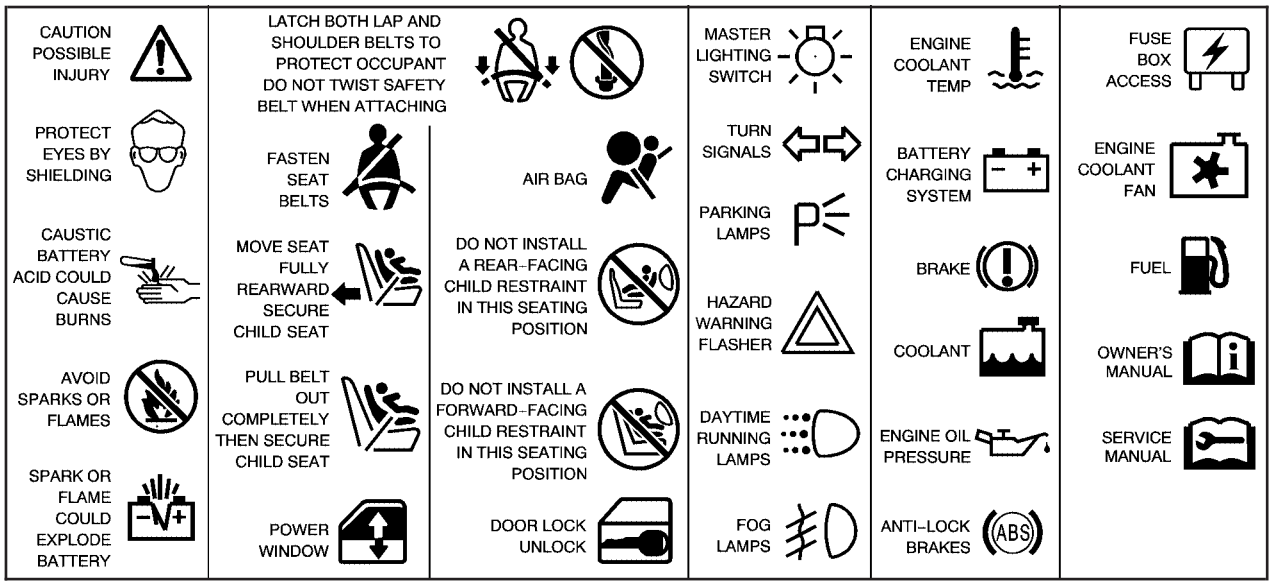

✍ NOTES

Section 1 Seats and Restraint Systems

Front Seats 1-3
Manual Seats 1-3
Power Seats 1-4
Power Lumbar 1-5
Heated Seats 1-5
Reclining Seatbacks 1-6
Head Restraints 1-8
Seatback Latches 1-8

Rear Seats 1-9
Rear Seat Operation (Extended Cab) 1-9
Rear Seat Operation (Crew Cab) 1-10

Safety Belts 1-11
Safety Belts: They Are for Everyone 1-11
Questions and Answers About Safety Belts 1-15
How to Wear Safety Belts Properly 1-16
Driver Position 1-16
Safety Belt Use During Pregnancy 1-25
Right Front Passenger Position 1-25
Center Passenger Position 1-25
Rear Seat Passengers 1-27
Rear Safety Belt Comfort Guides for Children and Small Adults 1-30
Safety Belt Extender 1-32

Child Restraints 1-33
Older Children 1-33
Infants and Young Children 1-35
Child Restraint Systems 1-39
Where to Put the Restraint 1-42
Top Strap 1-43
Top Strap Anchor Location 1-45
Lower Anchorages and Top Tethers for Children (LATCH System) 1-47
Securing a Child Restraint Designed for the LATCH System 1-49
Securing a Child Restraint in a Rear Outside Seat Position 1-50
Securing a Child Restraint in a Center Rear Seat Position 1-52
Securing a Child Restraint in the Center Front Seat Position 1-53
Securing a Child Restraint in the Right Front Seat Position (Crew Cab) 1-54
Securing a Child Restraint in the Right Front Seat Position (Regular and Extended Cab) (With Airbag Off Switch) 1-56
Securing a Child Restraint in the Right Front Seat Position (Regular and Extended Cab) (With Passenger Sensing System) 1-62

Section 1 Seats and Restraint Systems

Airbag System 1-66
Where Are the Airbags? 1-68
When Should an Airbag Inflate? 1-69
What Makes an Airbag Inflate? 1-71
How Does an Airbag Restrain? 1-71
What Will You See After an Airbag Inflates? 1-72
Airbag Off Switch 1-73
Passenger Sensing System 1-76
Servicing Your Airbag-Equipped Vehicle 1-80
Adding Equipment to Your Airbag-Equipped Vehicle 1-81

Restraint System Check 1-82
Checking Your Restraint Systems 1-82
Replacing Restraint System Parts After a Crash 1-82

Front Seats

Manual Seats

⚠ CAUTION:

You can lose control of the vehicle if you try to adjust a manual driver's seat while the vehicle is moving. The sudden movement could startle and confuse you, or make you push a pedal when you do not want to. Adjust the driver's seat only when the vehicle is not moving.

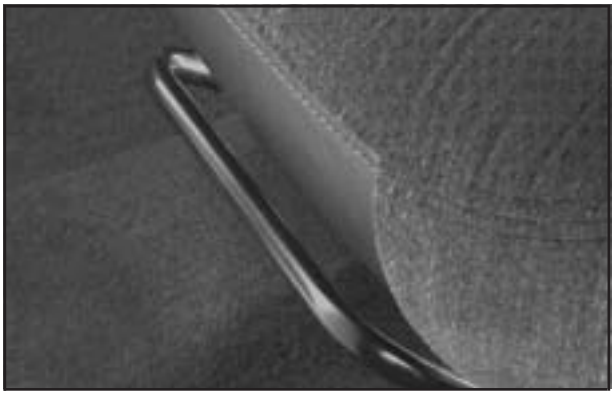

If your vehicle has a manual bucket or a split bench seat, you can adjust it with this lever located at the front of the seat.

Lift the lever to unlock the seat. Using your body, slide the seat to where you want it and release the lever. Try to move the seat with your body to make sure the seat is locked into place.

Power Seats

If your vehicle has a power seat, you can adjust it with these controls located on the outboard sides of the seats.

- Raise or lower the front of the seat cushion by raising or lowering the forward edge of the horizontal control.
- Move the seat forward or rearward by moving the whole horizontal control forward or rearward.
- Raise or lower the rear of the seat cushion by raising or lowering the rear edge of the horizontal control.
- Moving the whole horizontal control up or down raises or lowers the entire seat cushion.

If your vehicle has power reclining seats, you can use the vertical control to adjust the angle of the seatback. Move the reclining front seatback rearward or forward by moving the control toward the rear or the front of the vehicle. See *Reclining Seatbacks on page 1-6*.

Power Lumbar

Your vehicle's seats may be equipped with power lumbar.

You can increase or decrease lumbar support in an area of the lower seatback with this control, located on the outboard sides of the front seat(s).

To increase support, press and hold the front of the control. To decrease support, press and hold the rear of the control. Let go of the control when the lower seatback reaches the desired level of support.

You can also reshape the side wing area of the lower seatback for more lateral support.

To increase support, press and hold the top of the control. To decrease support, press and hold the bottom of the control. Let go of the control when the lower seatback reaches the desired level of support.

Your vehicle may have a memory function which allows seat settings to be saved and recalled. See *Memory Seat on page 2-74* for more information.

Heated Seats

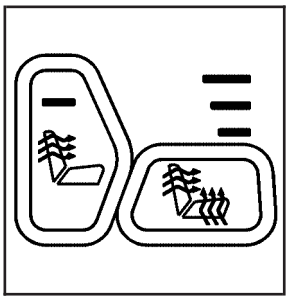

If your vehicle is equipped with this feature, the buttons are located on the front doors. The engine must be running for the heated seats to work.

To heat the entire seat, press the horizontal button with the heated seat and seatback symbol. Press the button to cycle through the temperature settings of high, medium and low and to turn the heated seat off. Indicator lights will be lit to designate the level of heat selected: three for high, two for medium, and one for low.

The low setting warms the seatback and cushion until the seat temperature is near body temperature. The medium and high settings heat the seatback and seat cushion to a slightly higher temperature. You will be able to feel heat in about two minutes.

To heat only the seatback, press the vertical button with the heated seatback symbol. An indicator light on the seatback button will be lit to designate that only the seatback is being heated. Additional presses of the seatback button will cycle through the heat levels for the seatback only. Press the horizontal button again to heat the whole seat.

The heated front seats will shut off automatically when the ignition is turned off.

Reclining Seatbacks

To adjust the front seatback, lift the manual lever located on the outboard side of the seat. Release the lever to lock the seatback where you want it. Lift the lever again without pushing on the seatback and the seatback will go to an upright position.

If your vehicle has power seats with a power recliner, see *Power Seats on page 1-4* for further information on how to operate the reclining seatback feature.

But don’t have a seatback reclined if your vehicle is moving.

⚠ CAUTION:

Sitting in a reclined position when your vehicle is in motion can be dangerous. Even if you buckle up, your safety belts can not do their job when you are reclined like this.

The shoulder belt can not do its job. In a crash, you could go into it, receiving neck or other injuries.

The lap belt can not do its job either. In a crash the belt could go up over your abdomen. The belt forces would be there, not at your pelvic bones. This could cause serious internal injuries.

For proper protection when the vehicle is in motion, have the seatback upright. Then sit well back in the seat and wear your safety belt properly.

Head Restraints

Adjust your head restraint so that the top of the restraint is closest to the top of your head. This position reduces the chance of a neck injury in a crash.

To raise the head restraint pull up on the head restraint.

Your vehicle may have rear seat head restraints that can be adjusted up and down.

Seatback Latches

⚠ CAUTION:

If the seatback is not locked, it could move forward in a sudden stop or crash. That could cause injury to the person sitting there. Always press rearward on the seatback to be sure it is locked.

The seatbacks fold forward to let you access the rear of the cab.

To fold a front seatback forward, lift the lever at the base of the seat to release the seatback.

The lever is located on the outboard side of the seat cushion.

To return the seatback to the upright position, push the seatback rearward until it latches. After returning the seatback to its upright position, push and pull on the seatback to make sure it is locked.

Rear Seats

Rear Seat Operation (Extended Cab)

Folding the Rear Seat

The extended cab's rear seat can be folded up to provide more cargo space. To fold the seat do the following:

1. Push down on the seat while pulling forward on the release strap located under the rear seat cushion.
2. Pull the seat cushion up until it latches with the seatback.
3. After latching the seat cushion up, gently pull forward on it to make sure it is locked.

The extended cab's rear seat can also be folded open for more seating space. To use the seat do the following:

1. Push rearward on the seat cushion while pulling forward on the release strap under the seat cushion. Pull the seat cushion down until it latches.
2. After latching the seat cushion down, gently pull up on it to make sure it is locked.

Rear Seat Operation (Crew Cab)

The second row rear seat has a 60/40 split seat. Either side of the rear seat may be folded down to give you more cargo space.

Make sure that nothing is under or in front of the seat and that the head restraints are completely lowered.

To fold the rear seat, do the following:

1. Pull up on the strap loop at the rear of the seat cushion. Then, pull the seat cushion up and fold it forward.
2. After folding the seat cushion fully forward, pull the seatback forward and fold the seatback down until it is flat. If the seatback cannot fold flat because it interferes with the cushion, try moving the front seat forward and/or bringing the front seat more upright. The lever at the base of the seat must be turned rearward to release the seatback.

To return the seat to the passenger position do the following:

1. Lift the seatback up and push it rearward all the way.
2. Lower the seat cushion until it latches into position.
3. Pull forward on the seatback and up on the seat cushion to make sure the seat is securely in place.

Check to see that the buckles on the driver's side seatback are accessible to the outboard and center occupant and are not under the seat cushions.

Safety Belts

Safety Belts: They Are for Everyone

This part of the manual tells you how to use safety belts properly. It also tells you some things you should not do with safety belts.

⚠ CAUTION:

Do not let anyone ride where he or she can not wear a safety belt properly. If you are in a crash and you are not wearing a safety belt, your injuries can be much worse. You can hit things inside the vehicle or be ejected from it. You can be seriously injured or killed. In the same crash, you might not be, if you are buckled up. Always fasten your safety belt, and check that your passengers' belts are fastened properly too.

⚠ CAUTION:

It is extremely dangerous to ride in a cargo area, inside or outside of a vehicle. In a collision, people riding in these areas are more likely to be seriously injured or killed. Do not allow people to ride in any area of your vehicle that is not equipped with seats and safety belts. Be sure everyone in your vehicle is in a seat and using a safety belt properly.

Your vehicle has a light that comes on as a reminder to buckle up. See *Safety Belt Reminder Light on page 3-33*.

In most states and in all Canadian provinces, the law says to wear safety belts. Here is why: *They work*.

You never know if you will be in a crash. If you do have a crash, you do not know if it will be a bad one.

A few crashes are mild, and some crashes can be so serious that even buckled up, a person would not survive. But most crashes are in between. In many of them, people who buckle up can survive and sometimes walk away. Without belts they could have been badly hurt or killed.

After more than 30 years of safety belts in vehicles, the facts are clear. In most crashes buckling up does matter...a lot!

Why Safety Belts Work

When you ride in or on anything, you go as fast as it goes.

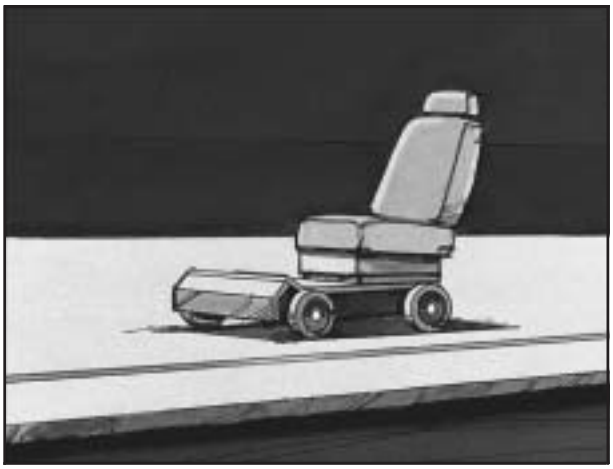

Take the simplest vehicle. Suppose it is just a seat on wheels.

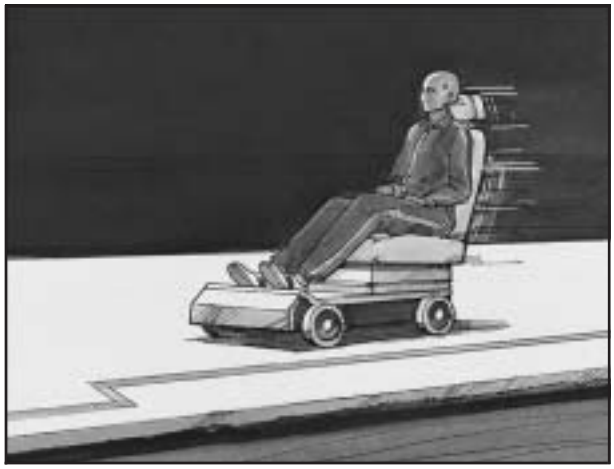

Put someone on it.

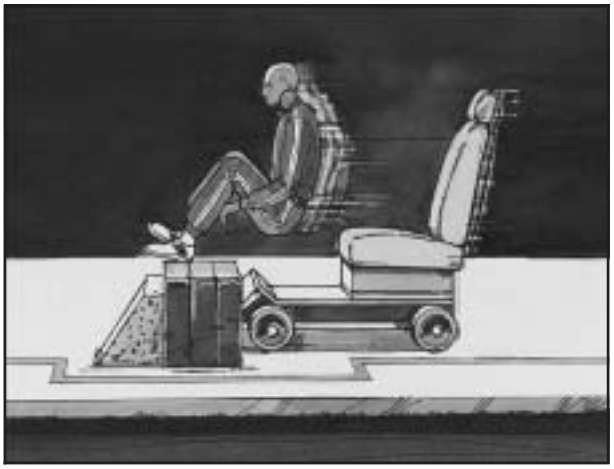

Get it up to speed. Then stop the vehicle. The rider does not stop.

The person keeps going until stopped by something. In a real vehicle, it could be the windshield...

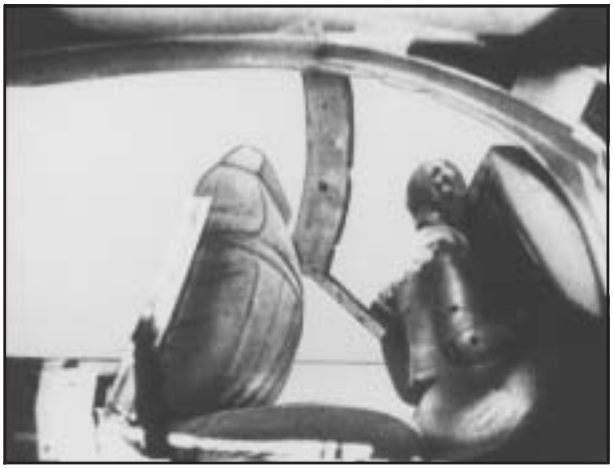

or the instrument panel...

or the safety belts!

With safety belts, you slow down as the vehicle does. You get more time to stop. You stop over more distance, and your strongest bones take the forces. That is why safety belts make such good sense.

Questions and Answers About Safety Belts

Q: Will I be trapped in the vehicle after an accident if I am wearing a safety belt?

A: You *could* be — whether you are wearing a safety belt or not. But you can unbuckle a safety belt, even if you are upside down. And your chance of being conscious during and after an accident, so you *can* unbuckle and get out, is *much* greater if you are belted.

Q: If my vehicle has airbags, why should I have to wear safety belts?

A: Airbags are in many vehicles today and will be in most of them in the future. But they are supplemental systems only; so they work *with* safety belts — not instead of them. Every airbag system ever offered for sale has required the use of safety belts. Even if you are in a vehicle that has airbags, you still have to buckle up to get the most protection. That is true not only in frontal collisions, but especially in side and other collisions.

Q: If I am a good driver, and I never drive far from home, why should I wear safety belts?

A: You may be an excellent driver, but if you are in an accident — even one that is not your fault — you and your passengers can be hurt. Being a good driver does not protect you from things beyond your control, such as bad drivers.

Most accidents occur within 25 miles (40 km) of home. And the greatest number of serious injuries and deaths occur at speeds of less than 40 mph (65 km/h).

Safety belts are for everyone.

How to Wear Safety Belts Properly

This part is only for people of adult size.

Be aware that there are special things to know about safety belts and children. And there are different rules for smaller children and babies. If a child will be riding in your vehicle, see *Older Children on page 1-33* or *Infants and Young Children on page 1-35*. Follow those rules for everyone's protection.

First, you will want to know which restraint systems your vehicle has.

We will start with the driver position.

Driver Position

Lap-Shoulder Belt

The driver has a lap-shoulder belt. Here is how to wear it properly.

1. Close and lock the door.
2. Adjust the seat so you can sit up straight. To see how, see "Seats" in the Index.

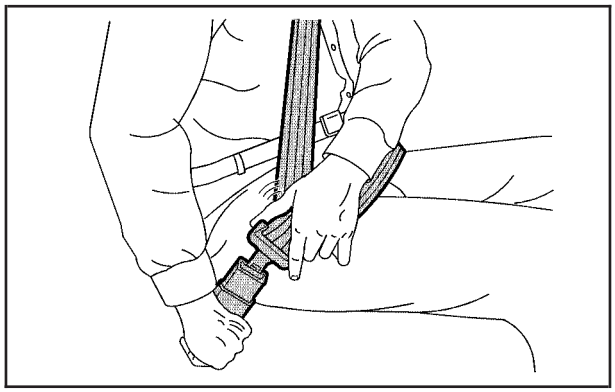

3. Pick up the latch plate and pull the belt across you. Do not let it get twisted.

   The shoulder belt may lock if you pull the belt across you very quickly. If this happens, let the belt go back slightly to unlock it. Then pull the belt across you more slowly.

4. Push the latch plate into the buckle until it clicks.

   Pull up on the latch plate to make sure it is secure. If the belt is not long enough, see *Safety Belt Extender on page 1-32*.

   Make sure the release button on the buckle is positioned so you would be able to unbuckle the safety belt quickly if you ever had to.

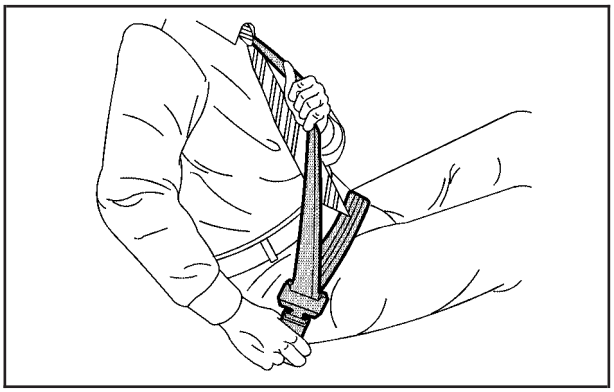

5. To make the lap part tight, pull down on the buckle end of the belt as you pull up on the shoulder belt.

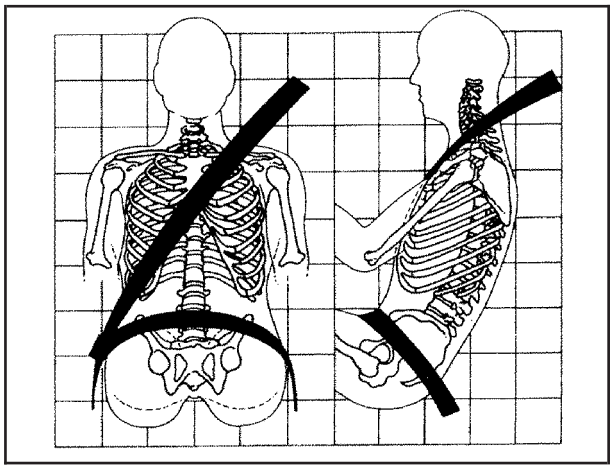

The lap part of the belt should be worn low and snug on the hips, just touching the thighs. In a crash, this applies force to the strong pelvic bones. And you would be less likely to slide under the lap belt. If you slid under it, the belt would apply force at your abdomen. This could cause serious or even fatal injuries. The shoulder belt should go over the shoulder and across the chest. These parts of the body are best able to take belt restraining forces.

The safety belt locks if there is a sudden stop or crash, or if you pull the belt very quickly out of the retractor.

Q: **What is wrong with this?**

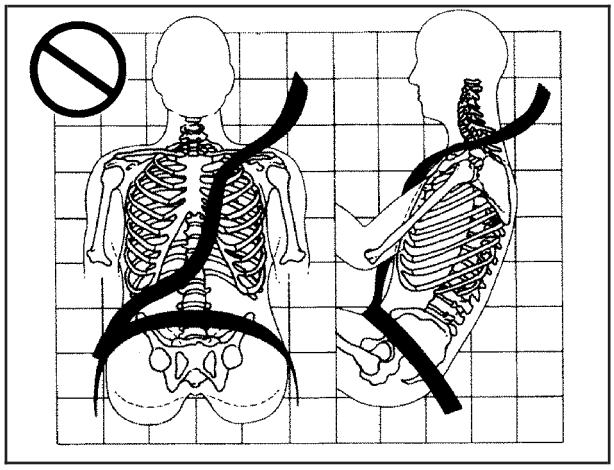

A: The shoulder belt is too loose. It will not give nearly as much protection this way.

⚠ CAUTION:

You can be seriously hurt if your shoulder belt is too loose. In a crash, you would move forward too much, which could increase injury. The shoulder belt should fit against your body.

Q: **What is wrong with this?**

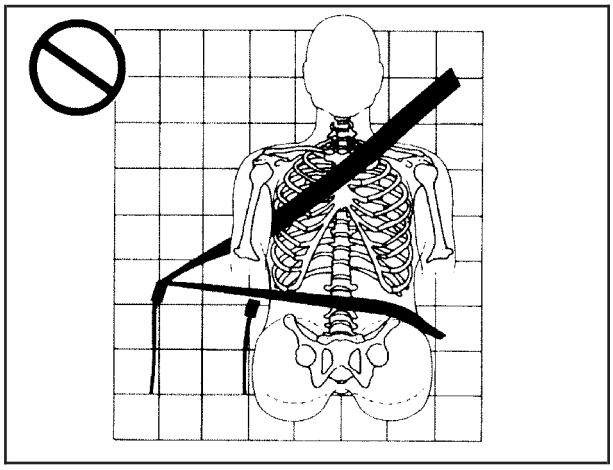

A: The belt is buckled in the wrong place.

⚠ CAUTION:

You can be seriously injured if your belt is buckled in the wrong place like this. In a crash, the belt would go up over your abdomen. The belt forces would be there, not at the pelvic bones. This could cause serious internal injuries. Always buckle your belt into the buckle nearest you.

Q: **What is wrong with this?**

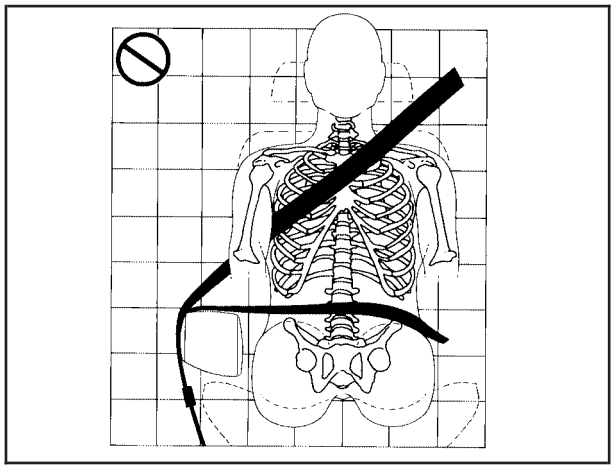

A: The belt is over an armrest.

⚠ CAUTION:

You can be seriously injured if your belt goes over an armrest like this. The belt would be much too high. In a crash, you can slide under the belt. The belt force would then be applied at the abdomen, not at the pelvic bones, and that could cause serious or fatal injuries. Be sure the belt goes under the armrests.

Q: **What is wrong with this?**

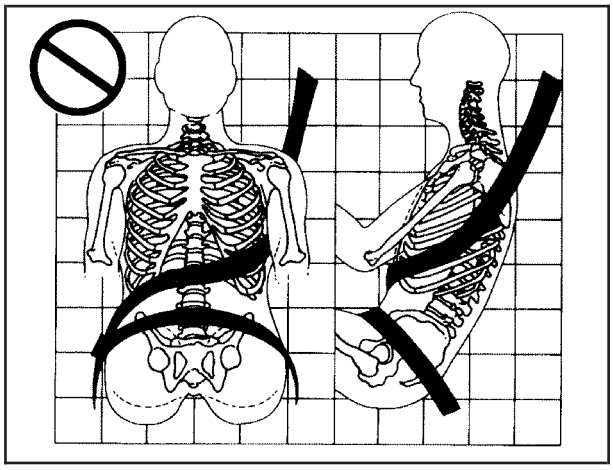

A: The shoulder belt is worn under the arm. It should be worn over the shoulder at all times.

⚠ CAUTION:

You can be seriously injured if you wear the shoulder belt under your arm. In a crash, your body would move too far forward, which would increase the chance of head and neck injury. Also, the belt would apply too much force to the ribs, which are not as strong as shoulder bones. You could also severely injure internal organs like your liver or spleen.

Q: **What is wrong with this?**

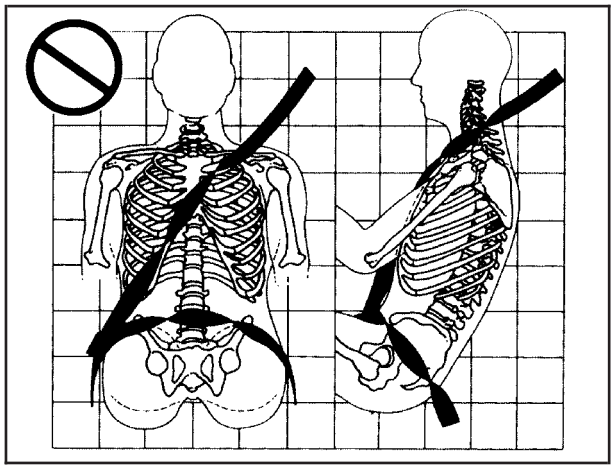

A: The belt is twisted across the body.

⚠ CAUTION:

You can be seriously injured by a twisted belt. In a crash, you would not have the full width of the belt to spread impact forces. If a belt is twisted, make it straight so it can work properly, or ask your dealer to fix it.

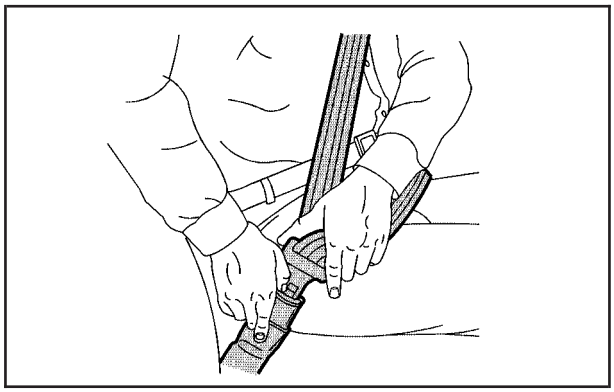

To unlatch the belt, just push the button on the buckle. The belt should go back out of the way.

Before you close the door, be sure the belt is out of the way. If you slam the door on it, you can damage both the belt and your vehicle.

Safety Belt Use During Pregnancy

Safety belts work for everyone, including pregnant women. Like all occupants, they are more likely to be seriously injured if they do not wear safety belts.

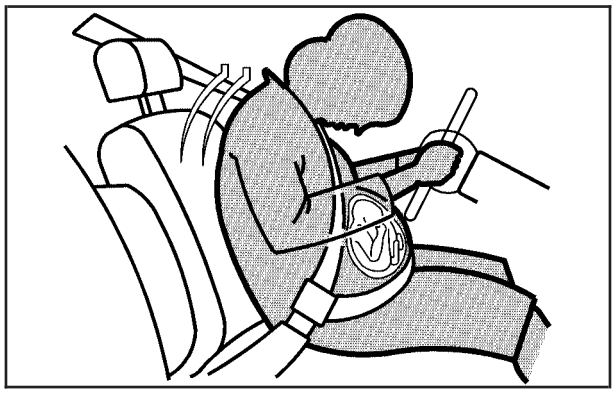

A pregnant woman should wear a lap-shoulder belt, and the lap portion should be worn as low as possible, below the rounding, throughout the pregnancy.

The best way to protect the fetus is to protect the mother. When a safety belt is worn properly, it is more likely that the fetus will not be hurt in a crash. For pregnant women, as for anyone, the key to making safety belts effective is wearing them properly.

Right Front Passenger Position

To learn how to wear the right front passenger's safety belt properly, see *Driver Position on page 1-16*.

The right front passenger's safety belt works the same way as the driver's safety belt — except for one thing. If you ever pull the shoulder portion of the belt out all the way, you will engage the child restraint locking feature which may turn off the passenger's frontal airbag. If this happens unintentionally, just let the belt go back all the way and start again.

Center Passenger Position

If your vehicle has front and rear bench seats, someone can sit in the center positions.

When you sit in the center rear seat position of a crew cab, you have a lap-shoulder belt which is similar to the rear outside seat positions. To learn how to wear this belt see "Lap-Shoulder Belt" under *Rear Seat Passengers on page 1-27*.

Lap Belt

When you sit in a center rear seat position of an extended cab or in the center front seat position of a crew cab, an extended cab, or a regular cab, you have a lap belt.

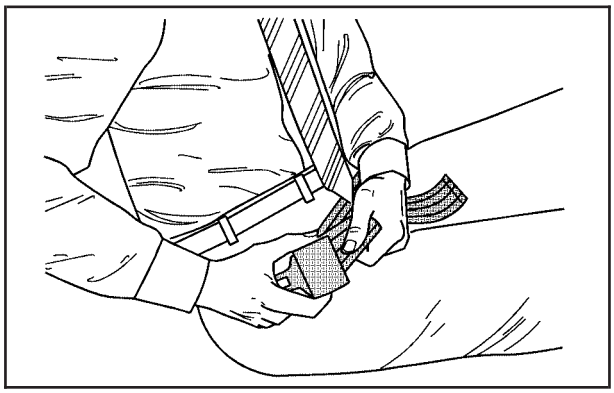

Your lap safety belt has no retractor. To make the belt longer, tilt the latch plate and pull it along the belt.

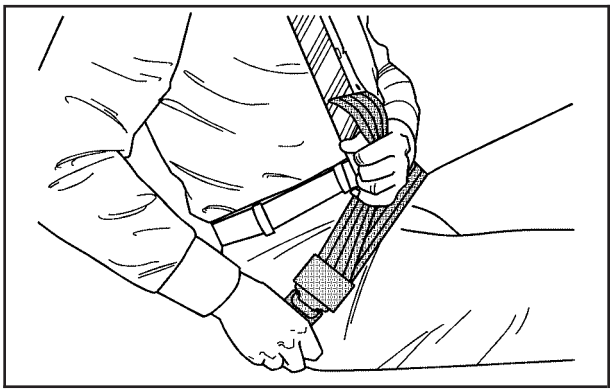

To make the belt shorter, pull its free end as shown until the belt is snug.

Buckle, position and release it the same way as the lap part of a lap-shoulder belt. If the belt is not long enough, see *Safety Belt Extender on page 1-32*.

Make sure the release button on the buckle is positioned so you would be able to unbuckle the safety belt quickly if you ever had to.

Rear Seat Passengers

It is very important for rear seat passengers to buckle up! Accident statistics show that unbelted people in the rear seat are hurt more often in crashes than those who are wearing safety belts.

Rear passengers who are not safety belted can be thrown out of the vehicle in a crash. And they can strike others in the vehicle who are wearing safety belts.

Rear Seat Outside Passenger Positions (Extended Cab and Crew Cab)

Lap-Shoulder Belt

Here is how to wear a lap-shoulder belt properly.

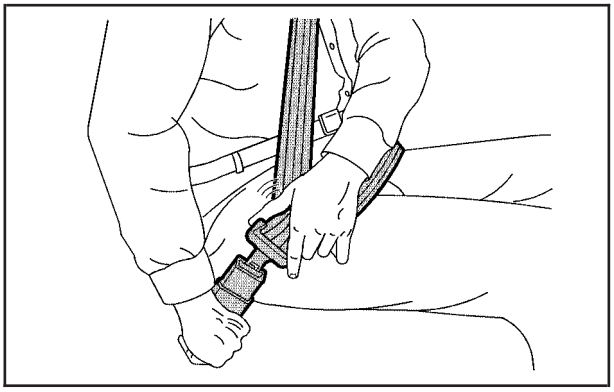

1. Pick up the latch plate and pull the belt across you. Do not let it get twisted.

   The shoulder belt may lock if you pull the belt across you very quickly. If this happens, let the belt go back slightly to unlock it. Then pull the belt across you more slowly.

2. Push the latch plate into the buckle until it clicks.

   Pull up on the latch plate to make sure it is secure.

   When the shoulder belt is pulled out all the way, it will lock. If it does, let it go back all the way and start again.

   If the belt is not long enough, see *Safety Belt Extender on page 1-32*.

   Make sure the release button on the buckle is positioned so you would be able to unbuckle the safety belt quickly if you ever had to.

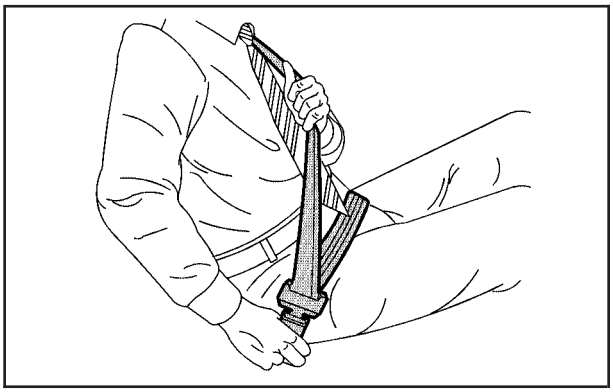

3. To make the lap part tight, pull down on the buckle end of the belt as you pull up on the shoulder part.

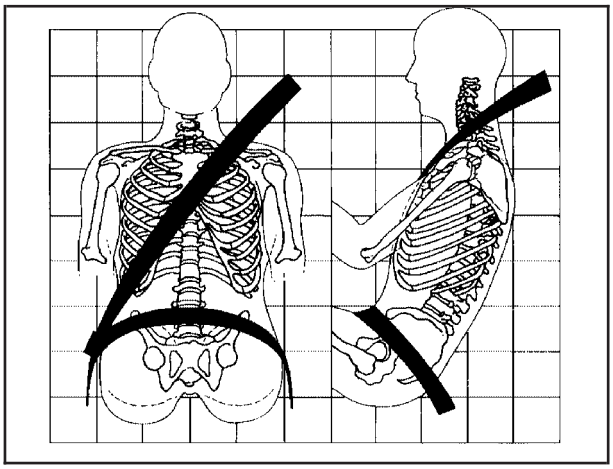

The lap part of the belt should be worn low and snug on the hips, just touching the thighs. In a crash, this applies force to the strong pelvic bones. And you would be less likely to slide under the lap belt. If you slid under it, the belt would apply force at your abdomen. This could cause serious or even fatal injuries. The shoulder belt should go over the shoulder and across the chest. These parts of the body are best able to take belt restraining forces.

The safety belt locks if there is a sudden stop or a crash. The safety belt also locks if you pull the belt very quickly out of the retractor.

⚠ CAUTION:

You can be seriously hurt if your shoulder belt is too loose. In a crash, you would move forward too much, which could increase injury. The shoulder belt should fit against your body.

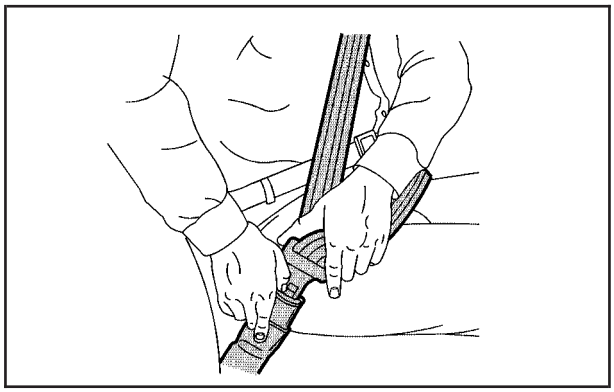

To unlatch the belt, just push the button on the buckle.

Rear Safety Belt Comfort Guides for Children and Small Adults

Rear seat comfort guides provide added safety belt comfort for older children who have outgrown booster seats and for small adults. When installed on a shoulder belt, the comfort guide better positions the belt away from the neck and head.

There is one guide for each outside passenger in the rear seat. Here is how to install a comfort guide and use the safety belt:

1. Remove the guide from its storage clip on the interior body.

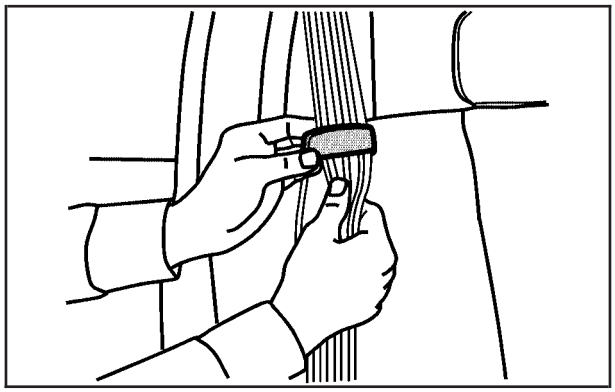

2. Place the guide over the belt and insert the two edges of the belt into the slots of the guide.

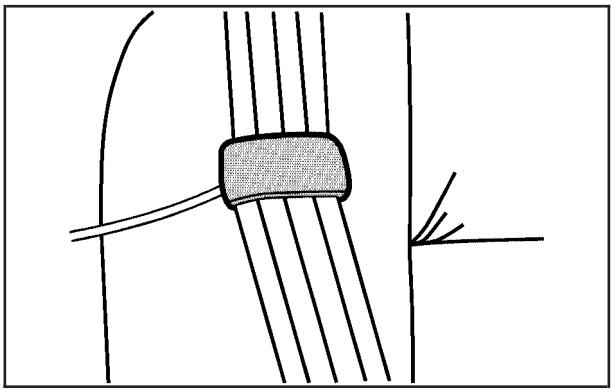

3. Be sure that the belt is not twisted and it lies flat. The guide must be on top of the belt.

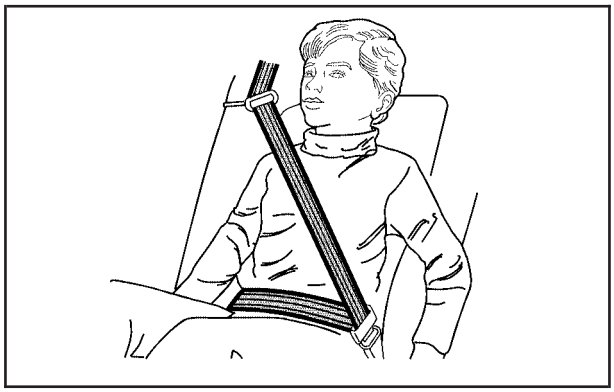

4. Buckle, position and release the safety belt as described in *Rear Seat Passengers on page 1-27*. Make sure that the shoulder belt crosses the shoulder.

To remove and store the comfort guides, squeeze the belt edges together so that you can take them out of the guides. Slide the guide onto the storage clip.

Safety Belt Extender

If the vehicle's safety belt will fasten around you, you should use it.

But if a safety belt is not long enough, your dealer will order you an extender. It is free. When you go in to order it, take the heaviest coat you will wear, so the extender will be long enough for you. To help avoid personal injury, do not let someone else use it, and use it only for the seat it is made to fit. The extender has been designed for adults. Never use it for securing child seats. To wear it, just attach it to the regular safety belt. For more information, see the instruction sheet that comes with the extender.

Child Restraints

Older Children

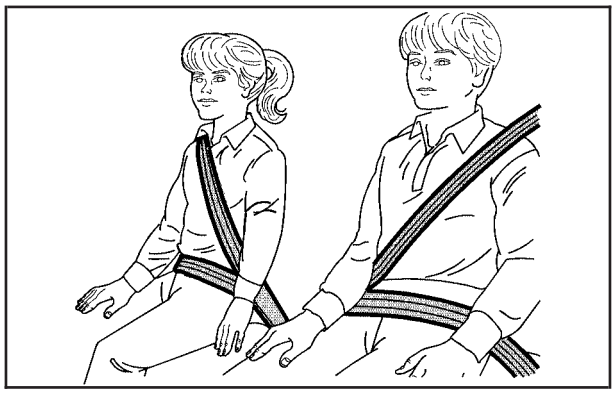

Older children who have outgrown booster seats should wear the vehicle's safety belts.

If you have the choice, a child should sit in a seat that has a lap-shoulder belt to get the additional restraint a shoulder belt can provide.

Q: What is the proper way to wear safety belts?

A: If possible, an older child should wear a lap-shoulder belt and get the additional restraint a shoulder belt can provide. The shoulder belt should not cross the face or neck. The lap belt should fit snugly below the hips, just touching the top of the thighs. It should never be worn over the abdomen, which could cause severe or even fatal internal injuries in a crash.

Accident statistics show that children are safer if they are restrained in the rear seat.

In a crash, children who are not buckled up can strike other people who are buckled up, or can be thrown out of the vehicle. Older children need to use safety belts properly.

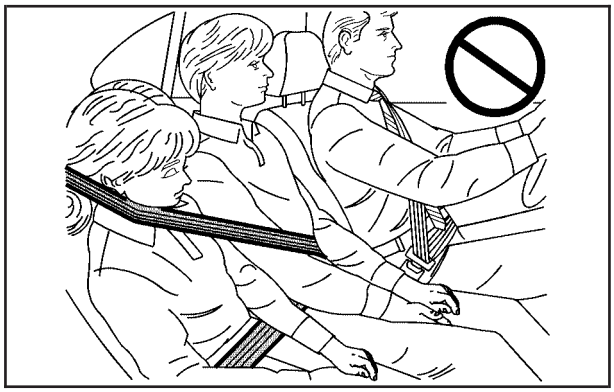

⚠ CAUTION:

Never do this.

Here two children are wearing the same belt. The belt can not properly spread the impact forces. In a crash, the two children can be crushed together and seriously injured. A belt must be used by only one person at a time.

Q: What if a child is wearing a lap-shoulder belt, but the child is so small that the shoulder belt is very close to the child's face or neck?

A: If the child is sitting in a rear outside seat position, move the child toward the center of the vehicle. See *Rear Safety Belt Comfort Guides for Children and Small Adults on page 1-30*. If the child is sitting in the center rear seat position of a crew cab, move the child toward the safety belt buckle. In either case be sure that the shoulder belt still is on the child's shoulder, so that in a crash the child's upper body would have the restraint that belts provide.

If the child is so small that the shoulder belt is still very close to the child's face or neck, you might want to place the child a seat that has a lap belt, if your vehicle has one.

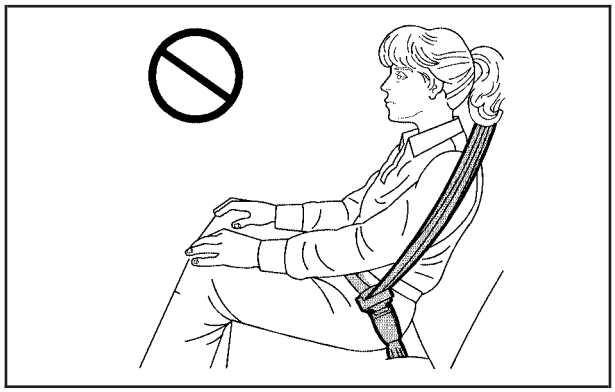

⚠ CAUTION:

Never do this.

Here a child is sitting in a seat that has a lap-shoulder belt, but the shoulder part is behind the child. If the child wears the belt in this way, in a crash the child might slide under the belt. The belt's force would then be applied right on the child's abdomen. That could cause serious or fatal injuries.

Wherever the child sits, the lap portion of the belt should be worn low and snug on the hips, just touching the child's thighs. This applies belt force to the child's pelvic bones in a crash.

Infants and Young Children

Everyone in a vehicle needs protection! This includes infants and all other children. Neither the distance traveled nor the age and size of the traveler changes the need, for everyone, to use safety restraints. In fact, the law in every state in the United States and in every Canadian province says children up to some age must be restrained while in a vehicle.

Every time infants and young children ride in vehicles, they should have the protection provided by appropriate restraints. Young children should not use the vehicle's adult safety belts alone, unless there is no other choice. Instead, they need to use a child restraint.

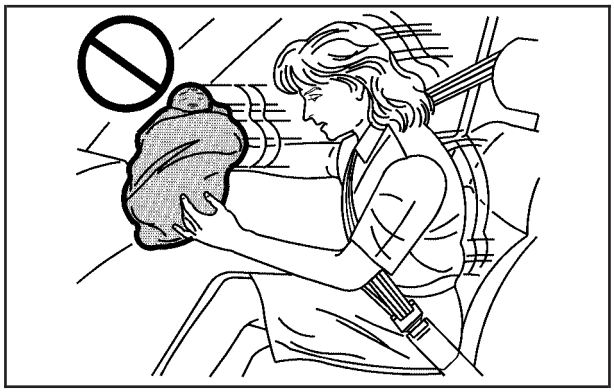

⚠ CAUTION:

People should never hold a baby in their arms while riding in a vehicle. A baby does not weigh much — until a crash. During a crash a baby will become so heavy it is not possible to hold it. For example, in a crash at only 25 mph (40 km/h), a 12 lb (5.5 kg) baby will suddenly become a 240 lb (110 kg) force on a person's arms. A baby should be secured in an appropriate restraint.

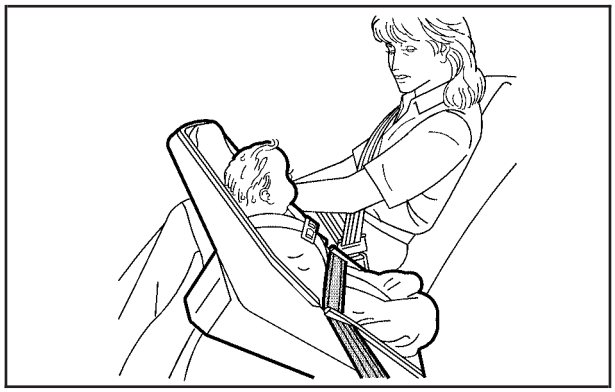

⚠ CAUTION:

Children who are up against, or very close to, any airbag when it inflates can be seriously injured or killed. Airbags plus lap-shoulder belts offer protection for adults and older children, but not for young children and infants. Neither the vehicle's safety belt system nor its airbag system is designed for them. Young children and infants need the protection that a child restraint system can provide.

Q: What are the different types of add-on child restraints?

A: Add-on child restraints, which are purchased by the vehicle's owner, are available in four basic types. Selection of a particular restraint should take into consideration not only the child's weight, height and age but also whether or not the restraint will be compatible with the motor vehicle in which it will be used.

For most basic types of child restraints, there are many different models available. When purchasing a child restraint, be sure it is designed to be used in a motor vehicle. If it is, the restraint will have a label saying that it meets federal motor vehicle safety standards.

The restraint manufacturer's instructions that come with the restraint state the weight and height limitations for a particular child restraint. In addition, there are many kinds of restraints available for children with special needs.

⚠ CAUTION:

Newborn infants need complete support, including support for the head and neck. This is necessary because a newborn infant's neck is weak and its head weighs so much compared with the rest of its body. In a crash, an infant in a rear-facing seat settles into the restraint, so the crash forces can be distributed across the strongest part of an infant's body, the back and shoulders. Infants always should be secured in appropriate infant restraints.

⚠ CAUTION:

The body structure of a young child is quite unlike that of an adult or older child, for whom the safety belts are designed. A young child's hip bones are still so small that the vehicle's regular safety belt may not remain low on the hip bones, as it should. Instead, it may settle up around the child's abdomen. In a crash, the belt would apply force on a body area that is unprotected by any bony structure. This alone could cause serious or fatal injuries. Young children always should be secured in appropriate child restraints.

Child Restraint Systems

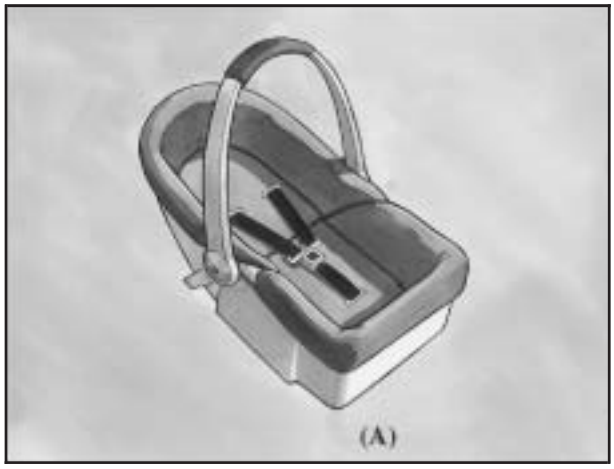

An infant car bed (A), a special bed made for use in a motor vehicle, is an infant restraint system designed to restrain or position a child on a continuous flat surface. Make sure that the infant's head rests toward the center of the vehicle.

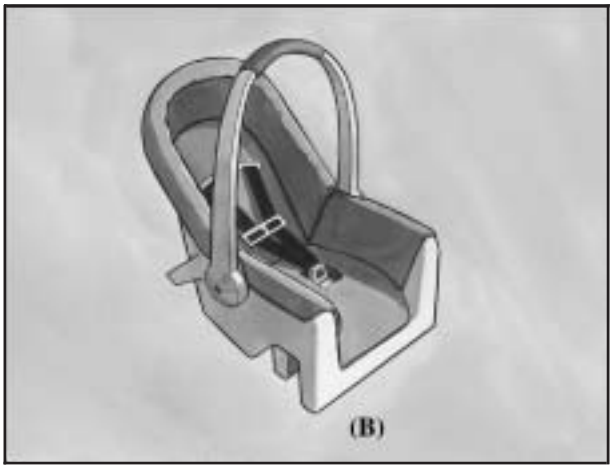

A rear-facing infant seat (B) provides restraint with the seating surface against the back of the infant. The harness system holds the infant in place and, in a crash, acts to keep the infant positioned in the restraint.

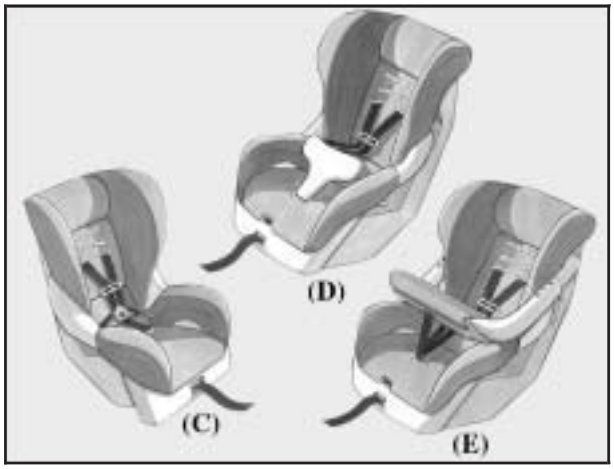

A forward-facing child seat (C-E) provides restraint for the child's body with the harness and also sometimes with surfaces such as T-shaped or shelf-like shields.

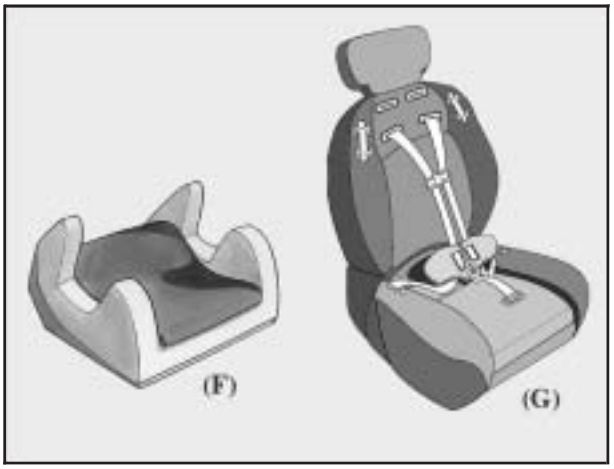

A booster seat (F-G) is a child restraint designed to improve the fit of the vehicle's safety belt system. Some booster seats have a shoulder belt positioner, and some high-back booster seats have a five-point harness. A booster seat can also help a child to see out the window.

Q: How do child restraints work?

A: A child restraint system is any device designed for use in a motor vehicle to restrain, seat, or position children. A built-in child restraint system is a permanent part of the motor vehicle. An add-on child restraint system is a portable one, which is purchased by the vehicle's owner.

For many years, add-on child restraints have used the adult belt system in the vehicle. To help reduce the chance of injury, the child also has to be secured within the restraint. The vehicle's belt system secures the add-on child restraint in the vehicle, and the add-on child restraint's harness system holds the child in place within the restraint.

One system, the three-point harness, has straps that come down over each of the infant's shoulders and buckle together at the crotch. The five-point harness system has two shoulder straps, two hip straps and a crotch strap. A shield may take the place of hip straps. A T-shaped shield has shoulder straps that are attached to a flat pad which rests low against the child's body. A shelf- or armrest-type shield has straps that are attached to a wide, shelf-like shield that swings up or to the side.

When choosing a child restraint, be sure the child restraint is designed to be used in a vehicle. If it is, it will have a label saying that it meets federal motor vehicle safety standards.

Then follow the instructions for the restraint. You may find these instructions on the restraint itself or in a booklet, or both. These restraints use the belt system or the LATCH system in your vehicle, but the child also has to be secured within the restraint to help reduce the chance of personal injury. When securing an add-on child restraint, refer to the instructions that come with the restraint which may be on the restraint itself or in a booklet, or both, and to this manual. The child restraint instructions are important, so if they are not available, obtain a replacement copy from the manufacturer.

Where to Put the Restraint

Accident statistics show that children are safer if they are restrained in the rear rather than the front seat. General Motors recommends that child restraints be secured in a rear seat including an infant riding in a rear-facing infant seat, a child riding in a forward-facing child seat and an older child riding in a booster seat. Never put a child in a rear-facing child restraint in the right front passenger seat unless your vehicle has the passenger sensing system or an airbag off switch and the passenger airbag status indicator or the airbag off light shows off. Never put a rear facing child restraint in the right front passenger seat unless the airbag is off. Here is why:

⚠ CAUTION:

A child in a rear-facing child restraint can be seriously injured or killed if the right front passenger's airbag inflates. This is because the back of the rear-facing child restraint

CAUTION: (Continued)

CAUTION: (Continued)

would be very close to the inflating airbag. Be sure the airbag is off before using a rear-facing child restraint in the right front seat position.

Even though the passenger sensing system or airbag off switch are designed to turn off the passenger's frontal airbag under certain conditions, no system is fail-safe, and no one can guarantee that an airbag will not deploy under some unusual circumstance, even though it is turned off. General Motors recommends that rear-facing child restraints be transported in vehicles with a rear seat that will accommodate a rear-facing child restraint, whenever possible.

If you need to secure a forward-facing child restraint in the right front seat, always move the front passenger seat as far back as it will go. It is better to secure the child restraint in a rear seat.

Do not use child restraints in the center front seat position. The restraints will not work properly.

There is limited space in the rear seating area of an extended cab model. If you want to secure a child restraint in a rear seating position of an extended cab model, especially in the rear center position, be sure to study the instructions that came with your child restraint to see if there is enough room to secure your seat properly.

If your vehicle has the passenger sensing system or the airbag off switch and you need to secure a rear-facing child restraint in the right front passenger's seat, the passenger's frontal airbag must be off. See *Passenger Sensing System on page 1-76*, *Airbag Off Switch on page 1-73*, *Securing a Child Restraint in the Right Front Seat Position (Regular and Extended Cab) (With Airbag Off Switch) on page 1-56* or *Securing a Child Restraint in the Right Front Seat Position (Regular and Extended Cab) (With Passenger Sensing System) on page 1-62* for more on this including important safety information.

Wherever you install it, be sure to secure the child restraint properly.

Keep in mind that an unsecured child restraint can move around in a collision or sudden stop and injure people in the vehicle. Be sure to properly secure any child restraint in your vehicle — even when no child is in it.

Top Strap

Some child restraints have a top strap or 'top tether'. It can help restrain the child restraint during a collision. For it to work, a top strap much be properly anchored to the vehicle. Some top strap-equipped child restraints are designed for use with or without the top strap being anchored. Others require the top strap always to be anchored. Be sure to read and follow the instructions for your child restraint. If yours requires that the top strap be anchored, do not use the restraint unless it is anchored properly.

If the child restraint does not have a top strap, one can be obtained, in kit form, for many child restraints. Ask the child restraint manufacturer whether or not a kit is available.

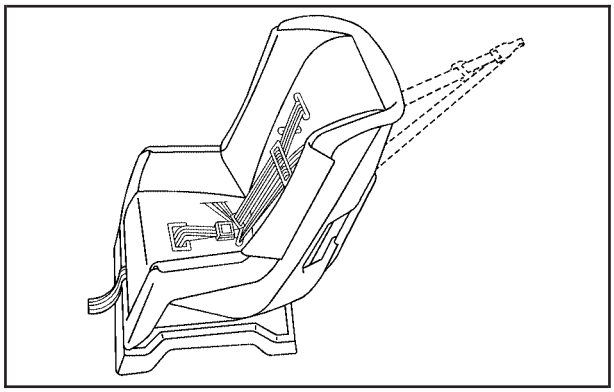

In Canada, the law requires that forward-facing child restraints have a top strap, and that the strap be anchored. In the United States, some child restraints also have a top strap. If your child restraint has a top strap, it should be anchored.

Anchor the top strap to one of the following anchor points. Be sure to use an anchor point located on the same side of the vehicle as the seating position where the child restraint will be placed. Raise the head restraint and route the top strap under it.

Once you have the top strap anchored, you will be ready to secure the child restraint itself. Tighten the top strap when and as the child restraint manufacturer's instructions say.

Top Strap Anchor Location

Regular Cab

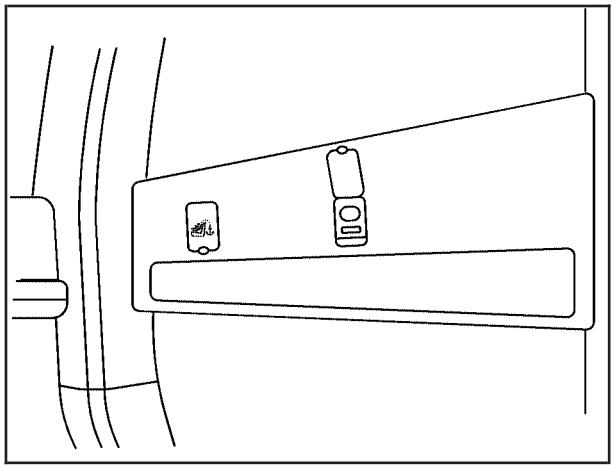

There is a top strap anchor for the right front passenger position located on the back panel of your vehicle, behind the right front passenger seat. In order to get to the anchor, you will have to remove the trim plug covering it.

Once you have the top strap anchored, you will be ready to secure the child restraint itself. Tighten the top strap when and as the child restraint manufacturer's instructions say.

Extended Cab

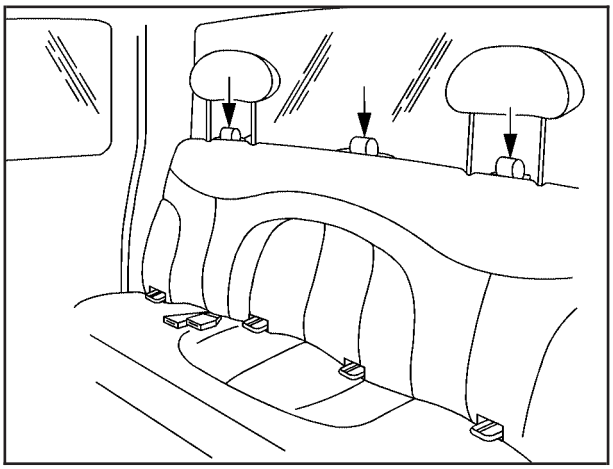

There are top strap anchors for the rear seating positions near the top of the seatback. In addition to the top strap anchors, each seating position has a fabric loop at the top of the seatback that you will use to route a top strap through.

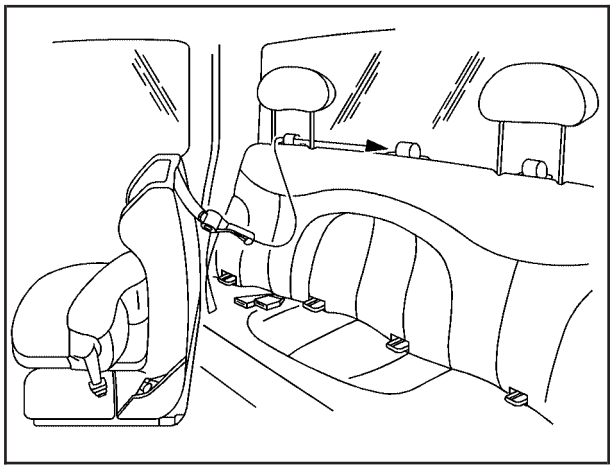

When using a child restraint with a top strap in either rear outboard position, raise the head restraint and route the top strap through the fabric loop on the seatback. Then, attach the top strap to the anchor point at the center rear seating position.

When using a child restraint with a top strap in the center rear position, route the top strap through the fabric loop on the seatback. Then, raise the head restraint and attach the top strap to the anchor point located at the closest outboard position.

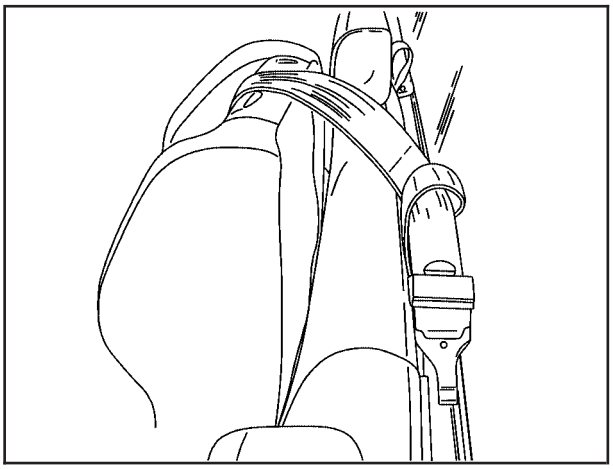

Once you have the top strap anchored, you will be ready to secure the child restraint itself. Tighten the top strap when and as the child restraint manufacturer's instructions say.

Do not secure a child restraint in the right front passenger position of an extended cab if a national or local law requires that the top strap be anchored, or if the instructions that come with the child restraint say that the top strap must be anchored. There is no place to anchor the top strap in this position.

Crew Cab

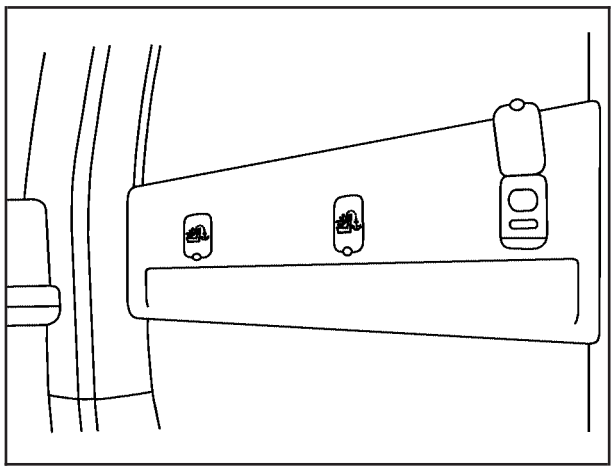

Top strap anchors for the rear seating positions are located on the back panel of your vehicle, behind the rear seat. In order to get to the brackets, you will have to remove the trim plugs covering them.

A child restraint with a top strap should only be used in the second row. Do not secure a child restraint in the right front passenger's position of a crew cab if a national or local law requires that the top strap be anchored, or if the instructions that come with the child restraint say that the top strap must be anchored. There is no place to anchor the top strap in this position.

Lower Anchorages and Top Tethers for Children (LATCH System)

Your vehicle may have the LATCH system. For extended cabs, you will find anchors for the rear outside seating positions. For crew cabs, you will find anchors for the second row center and second row right passenger seating positions. For regular cabs, there are no anchors.

This system, designed to make installation of child restraints easier, does not use the vehicle's safety belts. Instead, it uses vehicle anchors and child restraint attachments to secure the restraints. Some restraints also use another vehicle anchor to secure a top tether strap.

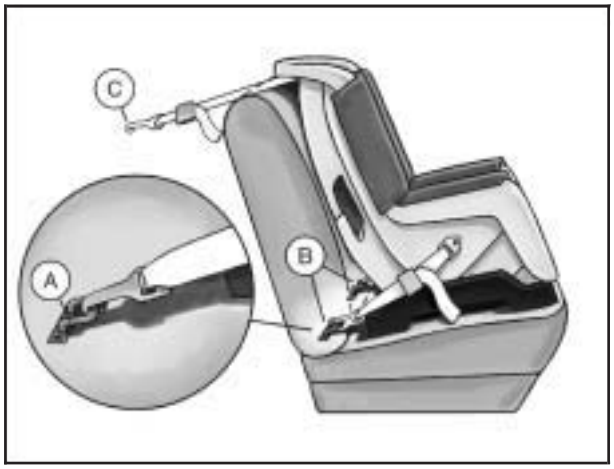

A. Lower Anchorage
B. Lower Anchorage
C. Top Tether

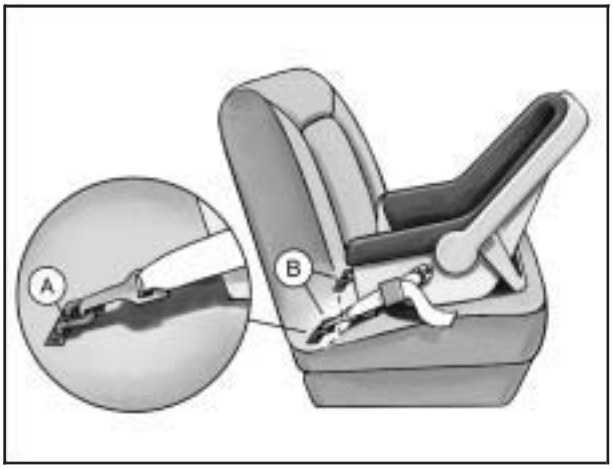

A. Lower Anchorage
B. Lower Anchorage

In order to use the LATCH system in your vehicle, you need a child restraint designed for that system.

To assist you in locating the lower anchors for this child restraint system, each seating position with the LATCH system has a visible metal anchor point in the seat where the seatback meets the seat cushion.

⚠ CAUTION:

If a LATCH-type child restraint is not attached to its anchorage points, the restraint will not be able to protect the child correctly. In a crash, the child could be seriously injured or killed. Make sure that a LATCH-type child restraint is properly installed using the anchorage points, or use the vehicle's safety belts to secure the restraint, following the instructions that came with that restraint, and also the instructions in this manual.

Securing a Child Restraint Designed for the LATCH System

1. Find the LATCH anchorages for the seating position you want to use, where the bottom of the seatback meets the back of the seat cushion. See *Lower Anchorages and Top Tethers for Children (LATCH System) on page 1-47*.
2. Put the child restraint on the seat.
3. Attach and tighten the LATCH attachments on the child restraint to the LATCH anchorages in the vehicle. The child restraint instructions will show you how.
4. If the child restraint is forward-facing, attach and tighten the top tether to the top tether anchorage. The child restraint instructions will show you how. Also see *Top Strap on page 1-43*.
5. Push and pull the child restraint in different directions to be sure it is secure.

To remove the child restraint, simply unhook the top tether from the top tether anchorage and then disconnect the LATCH attachments from the LATCH anchorages.

Securing a Child Restraint in a Rear Outside Seat Position

Extended Cab and Crew Cab

There is limited space in the rear seating of an extended cab model. If you want to secure a child restraint in a rear outside seating position, be sure to study the instructions that came with your child restraint to see if there is enough room to secure your seat properly.

If your child restraint is equipped with the LATCH system, see *Lower Anchorages and Top Tethers for Children (LATCH System) on page 1-47*. See *Top Strap on page 1-43* if the child restraint has one.

If your child restraint does not have the LATCH system, you will be using the lap-shoulder belt to secure the child restraint in this position. Be sure to follow the instructions that came with the child restraint. Secure the child in the child restraint when and as the instructions say.

1. Put the child restraint on the seat.
2. Pick up the latch plate and run the lap and shoulder portions of the vehicle's safety belt through or around the restraint. The child restraint instructions will show you how.

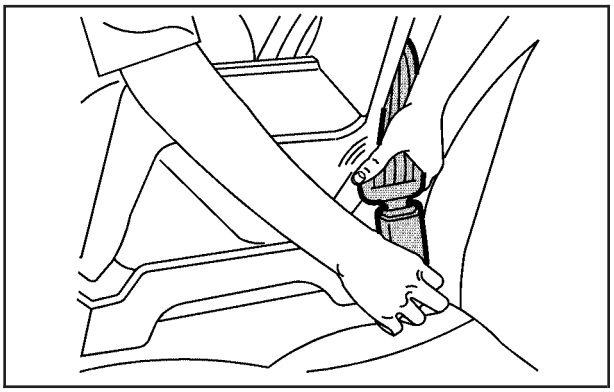

3. Buckle the belt. Make sure the release button is positioned so you would be able to unbuckle the safety belt quickly if you ever had to.

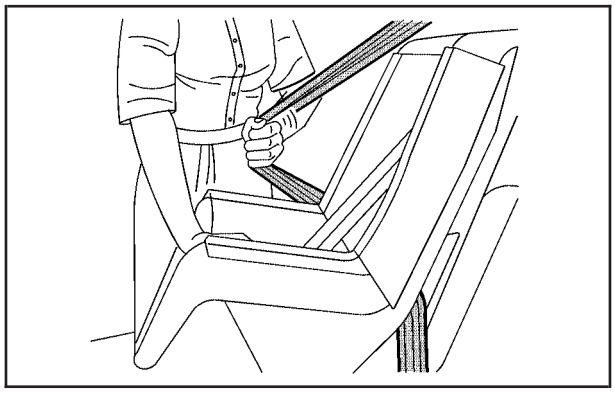

4. Pull the rest of the shoulder belt all the way out of the retractor to set the lock.

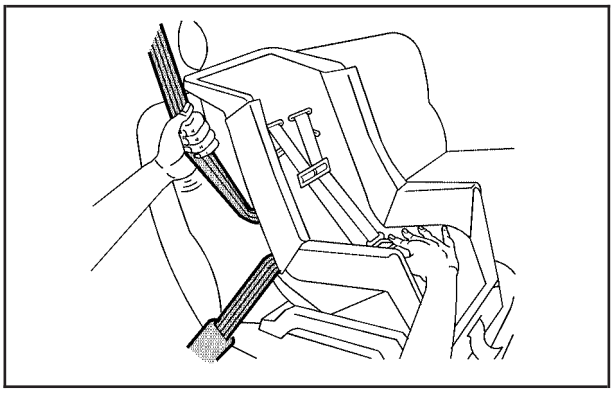

5. To tighten the belt, push down on the child restraint, pull the shoulder portion of the belt to tighten the lap portion of the belt and feed the shoulder belt back into the retractor. If you are using a forward-facing child restraint, you may find it helpful to use your knee to push down on the child restraint as you tighten the belt.
6. Push and pull the restraint in different directions to be sure it is secure.

To remove the child restraint, just unbuckle the vehicle's safety belt and let it go back all the way. The safety belt will move freely again and be ready to work for an adult or larger child passenger.

Securing a Child Restraint in a Center Rear Seat Position

If you have a extended cab or crew cab pickup, you can secure a child restraint in the center rear seat position.

Crew Cab

When you secure a child restraint in the center rear seat position of a crew cab, you will be using a lap-shoulder belt that works the same way as the safety belts in the rear outside seat positions. For instructions on how to secure a child restraint using a lap-shoulder belt see *Securing a Child Restraint in a Rear Outside Seat Position on page 1-50*.

Extended Cab

There is limited space in the rear seating area of an extended cab model. If you want to secure a child restraint in a rear seat position of an extended cab model, especially in the rear center seat position, be sure to study the instructions that came with your child restraint to see if there is enough room to secure your child restraint properly.

If your child restraint is equipped with the LATCH system, see *Lower Anchorages and Top Tethers for Children (LATCH System) on page 1-47*. See *Top Strap on page 1-43* if the child restraint has one.

If your child restraint does not have the LATCH system, you will be using the lap belt to secure a child restraint in the center rear seat position of an extended cab. Be sure to follow the instructions that came with the child restraint. Secure the child in the child restraint when and as the instructions say.

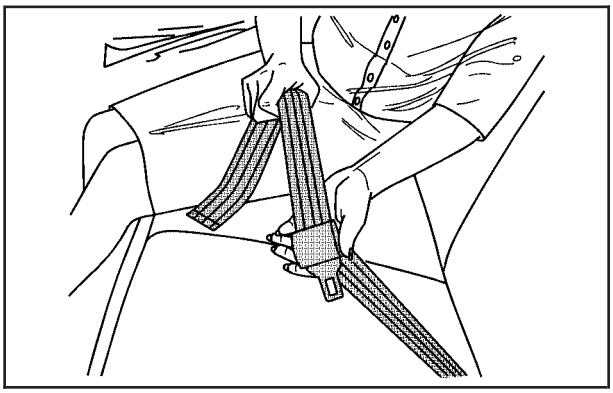

1. Make the belt as long as possible by tilting the latch plate and pulling it along the belt.
2. Put the child restraint on the seat.

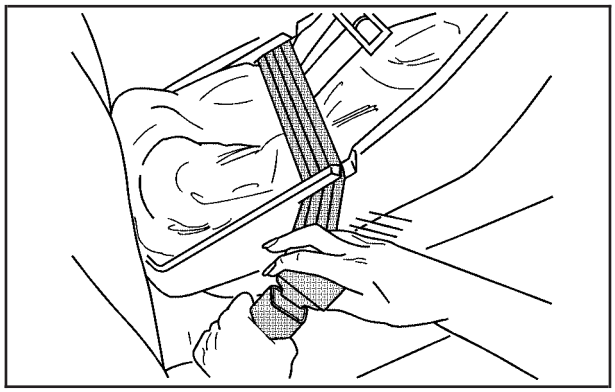

3. Run the vehicle's safety belt through or around the restraint. The child restraint instructions will show you how.
4. Buckle the belt. Make sure the release button is positioned so you would be able to unbuckle the safety belt quickly if you ever had to.
5. To tighten the belt, pull its free end while you push down on the child restraint. If you are using a forward-facing child restraint, you may find it helpful to use your knee to push the child restraint as you tighten the belt.
6. Push and pull the child restraint in different directions to be sure it is secure.

To remove the child restraint, just unbuckle the vehicle's safety belt. It will be ready to work for an adult or larger child passenger.

Securing a Child Restraint in the Center Front Seat Position

Do not use child restraints in this position. The restraints will not work properly.

Securing a Child Restraint in the Right Front Seat Position (Crew Cab)

Your vehicle has a right front passenger airbag. *Never* put a rear-facing child restraint in the right front passenger's seat. Here is why:

⚠ CAUTION:

A child in a rear-facing child restraint can be seriously injured or killed if the right front passenger's airbag inflates. This is because the back of the rear-facing child restraint would be very close to the inflating airbag. Always secure a rear-facing child restraint in a rear seat.

A rear seat is a safer place to secure a forward-facing child restraint. If you need to secure a forward-facing child restraint in the right front seat position, see *Where to Put the Restraint on page 1-42*.

If your child restraint is equipped with the LATCH system, see *Lower Anchorages and Top Tethers for Children (LATCH System) on page 1-47*. See *Top Strap on page 1-43* if your child restraint has one.

There is no top strap anchor in the right front passenger's position. Do not secure a child seat in this position if a national or local law requires that the top strap be anchored, or if the instructions that come with the child restraint say that the top strap must be anchored. See *Top Strap on page 1-43* if your child restraint has one.

You will be using the lap-shoulder belt to secure the restraint in this position. Be sure to follow the instructions that came with the child restraint. Secure the child in the child restraint when and as the instructions say.

1. Because your vehicle has a right front passenger's frontal airbag, always move the seat as far back as it will go before securing a forward-facing child restraint. See *Manual Seats on page 1-3* or *Power Seats on page 1-4*.
2. Put the child restraint on the seat.
3. Pick up the latch plate, and run the lap and shoulder portions of the vehicle's safety belt through or around the restraint. The child restraint instructions will show you how.

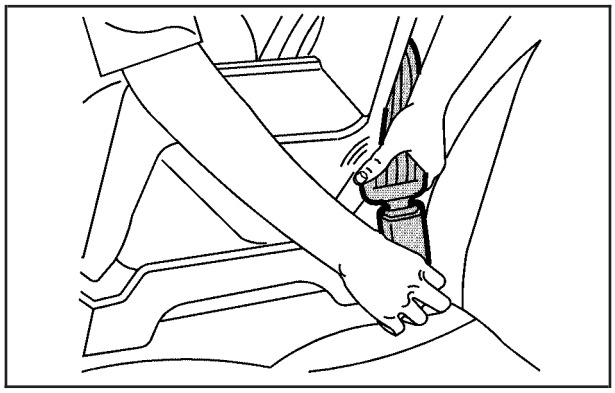

4. Buckle the belt. Make sure the release button is positioned so you would be able to unbuckle the safety belt quickly if you ever had to.

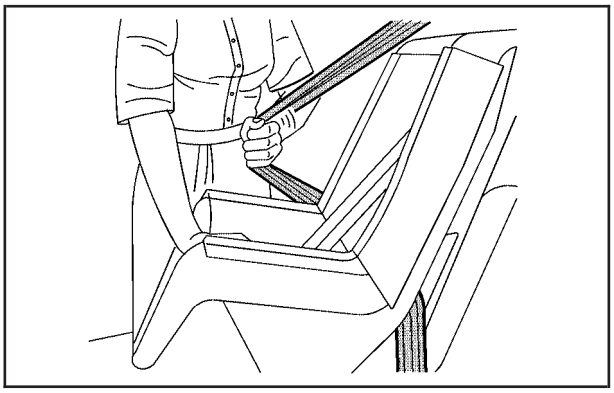

5. Pull the rest of the shoulder belt all the way out of the retractor to set the lock.

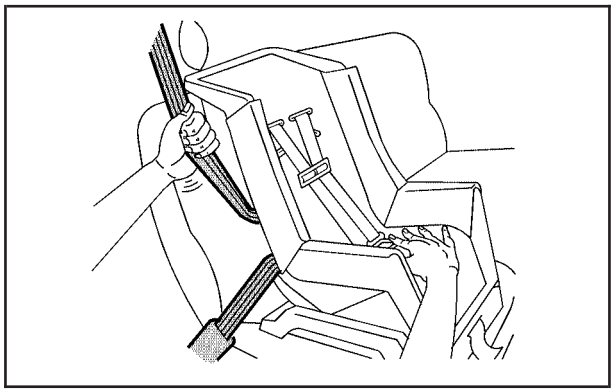

6. To tighten the belt, push down on the child restraint, pull the shoulder portion of the belt to tighten the lap portion of the belt and feed the shoulder belt back into the retractor. If you are using a forward-facing child restraint, you may find it helpful to use your knee to push down on the child restraint as you tighten the belt. You should not be able to pull more of the belt out of the retractor once the lock has been set.
7. Push and pull the child restraint in different directions to be sure it is secure.

To remove the child restraint, just unbuckle the vehicle's safety belt and let it go back all the way. The safety belt will move freely again and be ready to work for an adult or larger child passenger.

Securing a Child Restraint in the Right Front Seat Position (Regular and Extended Cab) (With Airbag Off Switch)

Your vehicle has a right front passenger airbag. There is a switch on the instrument panel that you can use to turn off the right front passenger's frontal airbag. See the following illustration. Your switch may vary slightly. See *Airbag Off Switch on page 1-73* for more on this, including important safety information and illustrations of alternate switch designs.

⚠ CAUTION:

A child in a rear-facing child restraint can be seriously injured or killed if the passenger's airbag inflates. This is because the back of the rear-facing child restraint would be very close to the inflating airbag. Do not use a rear-facing child restraint in this vehicle unless the passenger's airbag has been turned off.

Even though the airbag off switch is designed to turn off the passenger's frontal airbag, no system is fail-safe, and no one can guarantee

CAUTION: (Continued)

CAUTION: (Continued)

that an airbag will not deploy under some unusual circumstance, even though it is turned off. We recommend that rear-facing child restraints be transported in vehicles with a rear seat that will accommodate a rear-facing child restraint, whenever possible.

If you need to secure a forward-facing child restraint in the right front static seat or the right front bench seat, always move the passenger seat as far back as it will go.

United States

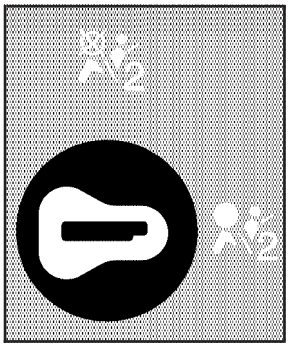

Canada

Never put a rear facing child restraint in the right front passenger's seat unless the airbag is off. Here is why:

⚠ CAUTION:

A child in a rear-facing child restraint can be seriously injured or killed if the right front passenger's airbag inflates. This is because the back of the rear-facing child restraint would be very close to the inflating airbag. Be sure the airbag is off before using a rear-facing child restraint in the right front seat position. If you secure a forward-facing child restraint in the right front seat, always move the right front passenger seat as far back as it will go.

A rear seat is a safer place to secure a forward facing child restraint. See *Where to Put the Restraint on page 1-42*. If you need to secure a forward-facing child restraint in the right front seat position, move the seat as far back as it will go before securing a forward-facing child restraint. See *Manual Seats on page 1-3* or *Power Seats on page 1-4*.

⚠ CAUTION:

If the airbag readiness light in the instrument panel cluster ever comes on when you have turned off the airbag, it means that something may be wrong with the airbag system. The right front passenger's airbag could inflate even though the switch is off. If this ever happens, have the vehicle serviced promptly. Until you have the vehicle serviced, do not let anyone whom the national government has identified as a member of a passenger airbag risk group sit in the right front passenger's position (for example, do not secure a rear-facing child restraint in the right front passenger's seat). See *Airbag Off Switch on page 1-73*.

If your vehicle is an extended cab and your child restraint is equipped with the LATCH system, see *Lower Anchorages and Top Tethers for Children (LATCH System) on page 1-47*. See *Top Strap on page 1-43* if your child restraint has one.

You will be using the lap-shoulder belt to secure the child restraint in this position. Be sure to follow the instructions that came with the child restraint. Secure the child in the child restraint when and as the instructions say.

1. Your vehicle has a right front passenger's frontal airbag. See *Airbag Off Switch on page 1-73*. If your child restraint is forward-facing, move the seat as far back as it will go before securing the restraint in this seat. See *Manual Seats on page 1-3* or *Power Seats on page 1-4*. If you need to use a rear-facing child restraint in this seat, make sure the airbag is off once the child restraint has been installed.

   When the airbag off switch has turned off the right front passenger's frontal airbag, the off indicator in the airbag off light should light and stay lit when you turn the ignition to RUN or START. See *Airbag Off Light on page 3-34*.
2. Put the child restraint on the seat.
3. Pick up the latch plate, and run the lap and shoulder portions of the vehicle's safety belt through or around the restraint. The child restraint instructions will show you how.

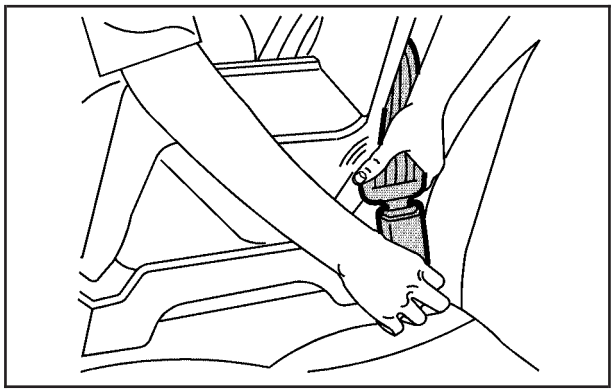

4. Buckle the belt. Make sure the release button is positioned so you would be able to unbuckle the safety belt quickly if you ever had to.

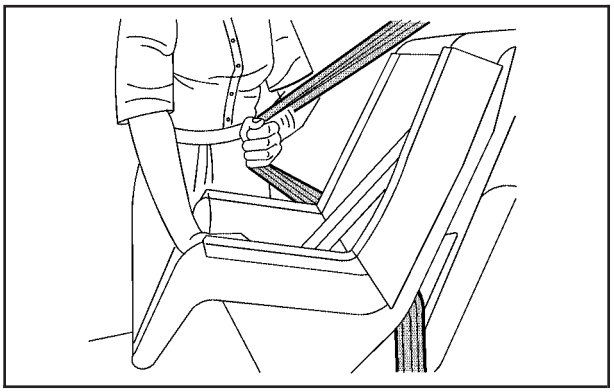

5. Pull the rest of the shoulder belt all the way out of the retractor to set the lock.

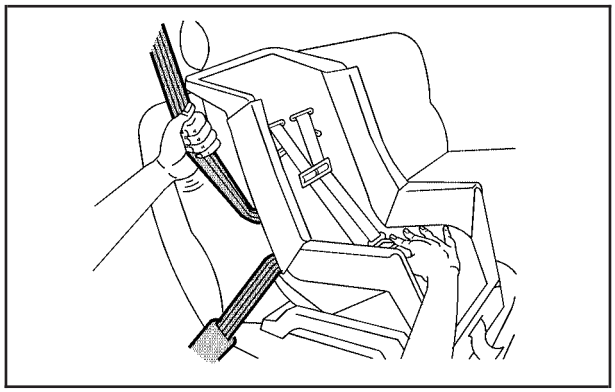

6. To tighten the belt, push down on the child restraint, pull the shoulder belt to tighten the lap belt portion and feed the shoulder belt back into the retractor. If you are using a forward-facing child restraint, you may find it helpful to use your knee to push down on the child restraint as you tighten the belt. You should not be able to pull more of the belt out of the retractor once the lock has been set.
7. Push and pull the child restraint in different directions to be sure it is secure.

To remove the child restraint, just unbuckle the vehicle's safety belt and let it go back all the way. The safety belt will move freely again and be ready to work for an adult or larger child passenger.

If you had turned the airbag off with the switch, remember to be sure to use the airbag off switch to turn on the right front passenger's airbag when you remove the child restraint from the vehicle unless the person who will be sitting there is a member of a passenger airbag risk group. See *Airbag Off Switch on page 1-73*.

⚠ CAUTION:

If the right front passenger's airbag is turned off for a person who is not in a risk group identified by the national government, that person will not have the extra protection of an airbag. In a crash, the airbag will not be able to inflate and help protect the person sitting there. Do not turn off the passenger's airbag unless the person sitting there is in a risk group. See *Airbag Off Switch on page 1-73* for more on this, including important safety information.

Securing a Child Restraint in the Right Front Seat Position (Regular and Extended Cab) (With Passenger Sensing System)

Your vehicle has a right front passenger airbag. A rear seat is a safer place to secure a forward-facing child restraint. See *Where to Put the Restraint on page 1-42*.

In addition, your vehicle has the passenger sensing system. The passenger sensing system is designed to turn off the right front passenger's frontal airbag when an infant in a rear-facing infant seat or a small child in a forward-facing child restraint or booster seat is detected. See *Passenger Sensing System on page 1-76* and *Passenger Airbag Status Indicator on page 3-36* for more information on this including important safety information.

⚠ CAUTION:

A child in a rear-facing child restraint can be seriously injured or killed if the right front passenger's airbag inflates. This is because the back of the rear facing child restraint would be very close to the inflating airbag. Be sure the airbag is off before using a rear-facing child restraint in the right front seat position.

Even though the passenger sensing system is designed to turn off the passenger's frontal airbag under certain conditions, no system is fail-safe, and no one can guarantee that an airbag will not deploy under some unusual circumstance, even though it is turned off. General Motors recommends that rear-facing child restraints be transported in vehicles with a rear seat that will accommodate a rear-facing child restraint, whenever possible.

If you need to secure a forward-facing child restraint in the right front seat position, move the seat as far back as it will go before securing the forward-facing child restraint. See *Power Seats on page 1-4* or *Manual Seats on page 1-3*.

If your vehicle is an extended cab and your child restraint is equipped with the LATCH system, see *Lower Anchorages and Top Tethers for Children (LATCH System) on page 1-47*. See *Top Strap on page 1-43* if your child restraint has one.

You will be using the lap-shoulder belt to secure the child restraint in this position. Be sure to follow the instructions that came with the child restraint. Secure the child in the child restraint when and as the instructions say.

1. Your vehicle has a right front passenger's frontal airbag. See *Passenger Sensing System on page 1-76*. General Motors recommends that rear-facing child restraints be secured in a rear seat, even if the airbag is off. If your child restraint is forward-facing, move the seat as far back as it will go before securing the child restraint in this seat. See *Power Seats on page 1-4* or *Manual Seats on page 1-3*.

   When the passenger sensing system has turned off the right front passenger's frontal airbag, the off indicator in the passenger airbag status indicator should light and stay lit when you turn the ignition to RUN or START. See *Passenger Airbag Status Indicator on page 3-36*.

2. Put the child restraint on the seat.

3. Pick up the latch plate, and run the lap and shoulder portions of the vehicle's safety belt through or around the restraint. The child restraint instructions will show you how.

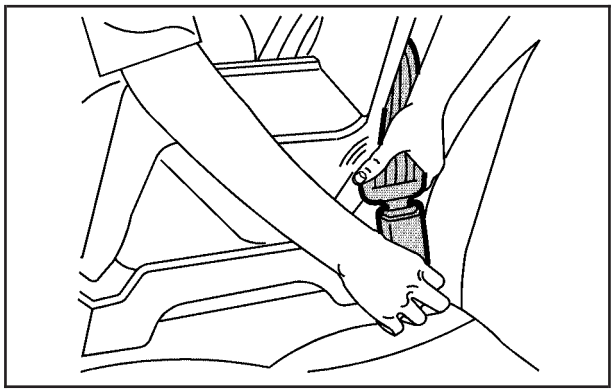

4. Buckle the belt. Make sure the release button is positioned so you would be able to unbuckle the safety belt quickly if you ever had to.

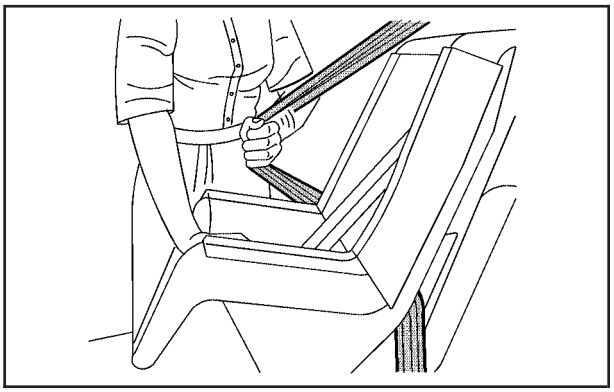

5. Pull the rest of the shoulder belt all the way out of the retractor to set the lock.

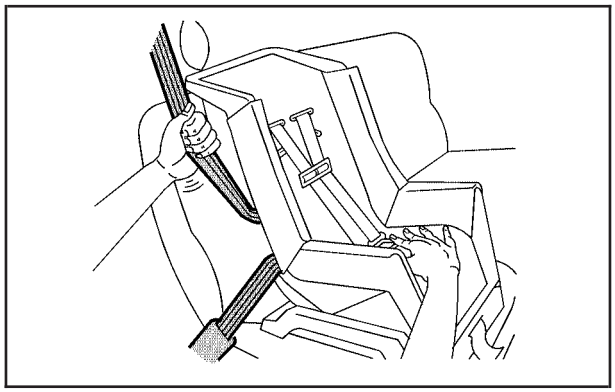

6. To tighten the belt, push down on the child restraint, pull the shoulder portion of the belt to tighten the lap portion of the belt and feed the shoulder belt back into the retractor. If you are using a forward-facing child restraint, you may find it helpful to use your knee to push down on the child restraint as you tighten the belt. You should not be able to pull more of the belt from the retractor once the lock has been set.
7. Push and pull the child restraint in different directions to be sure it is secure.
8. If the airbag is off, the off indicator in the inside rearview mirror will be lit and stay lit when the key is turned to RUN or START.

If a child restraint has been installed and the on indicator is lit, turn the vehicle off. Remove the child restraint from the vehicle and reinstall the child restraint.

If after reinstalling the child restraint and restarting the vehicle, the on indicator is still lit, check to make sure that the vehicle's seatback is not pressing the child restraint into the seat cushion. If this happens, slightly recline the vehicle's seatback and adjust the seat cushion if possible. Also make sure the child restraint is not trapped under the vehicle head restraint. If this happens, adjust the head restraint.

If the on indicator is still lit, secure the child in the child restraint in a rear seat position in the vehicle and check with your dealer.

To remove the child restraint, just unbuckle the vehicle's safety belt and let it go back all the way. The safety belt will move freely again and be ready to work for an adult or larger child passenger.

Airbag System

Your vehicle has airbags — one airbag for the driver and another airbag for the right front passenger.

Frontal airbags are designed to help reduce the risk of injury from the force of an inflating frontal airbag. But these airbags must inflate very quickly to do their job and comply with federal regulations.

Here are the most important things to know about the airbag system:

⚠ CAUTION:

You can be severely injured or killed in a crash if you are not wearing your safety belt — even if you have airbags. Wearing your safety belt during a crash helps reduce your chance of hitting things inside the vehicle or being ejected from it. Airbags are designed to work

CAUTION: (Continued)

CAUTION: (Continued)

with safety belts, but do not replace them. Airbags are designed to deploy only in moderate to severe frontal and near frontal crashes. They are not designed to inflate in rollover, rear or low-speed frontal crashes, or in many side crashes. And, for some unrestrained occupants, airbags may provide less protection in frontal crashes than more forceful airbags have provided in the past. Everyone in your vehicle should wear a safety belt properly — whether or not there is an airbag for that person.

⚠ CAUTION:

Airbags inflate with great force, faster than the blink of an eye. If you are too close to an inflating airbag, as you would be if you were leaning forward, it could seriously injure you. Safety belts help keep you in position before and during a crash. Always wear your safety belt, even with airbags. The driver should sit as far back as possible while still maintaining control of the vehicle.

⚠ CAUTION:

Anyone who is up against, or very close to, any airbag when it inflates can be seriously injured or killed. Airbags plus lap-shoulder belts offer the best protection for adults, but

CAUTION: (Continued)

CAUTION: (Continued)

not for young children and infants. Neither the vehicle's safety belt system nor its airbag system is designed for them. Young children and infants need the protection that a child restraint system can provide. Always secure children properly in your vehicle. To read how, see *Older Children on page 1-33* and *Infants and Young Children on page 1-35*.

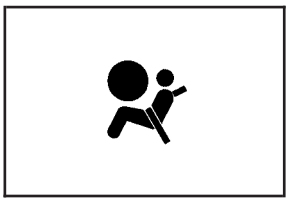

There is an airbag readiness light on the instrument panel cluster, which shows the airbag symbol.

The system checks the airbag electrical system for malfunctions. The light tells you if there is an electrical problem. See *Airbag Readiness Light on page 3-34* for more information.

Where Are the Airbags?

The driver's airbag is in the middle of the steering wheel.

The right front passenger's airbag is in the instrument panel on the passenger's side.

⚠ CAUTION:

If something is between an occupant and an airbag, the bag might not inflate properly or it might force the object into that person causing severe injury or even death. The path of an inflating airbag must be kept clear. Do not put anything between an occupant and an airbag, and do not attach or put anything on the steering wheel hub or on or near any other airbag covering.

When Should an Airbag Inflate?

The driver's and right front passenger's frontal airbags are designed to inflate in moderate to severe frontal or near-frontal crashes. But they are designed to inflate only if the impact exceeds a predetermined deployment threshold. Deployment thresholds take into account a variety of desired deployment and non-deployment events and are used to predict how severe a crash is likely to be in time for the airbags to inflate and help restrain the occupants. Whether your frontal airbags will or should deploy is not based on how fast your vehicle is traveling. It depends largely on what you hit, the direction of the impact and how quickly your vehicle slows down.

Airbags may inflate at different crash speeds. For example:

- If the vehicle hits a stationary object, the airbag could inflate at a different crash speed than if the object were moving.
- If the object deforms, the airbag could inflate at a different crash speed than if the object does not deform.
- If the vehicle hits a narrow object (like a pole) the airbag could inflate at a different crash speed than if the vehicle hits a wide object (like a wall).
- If the vehicle goes into an object at an angle the airbag could inflate at a different crash speed than if the vehicle goes straight into the object.

The frontal airbags (driver and right front passenger) are not intended to inflate during vehicle rollovers, rear impacts, or in many side impacts because inflation would not likely help the occupants.

In any particular crash, no one can say whether an airbag should have inflated simply because of the damage to a vehicle or because of what the repair costs were. Inflation is determined by the angle of the impact and how quickly the vehicle slows down in frontal or near-frontal impacts.

The airbag system is designed to work properly under a wide range of conditions, including off-road usage. Observe safe driving speeds, especially on rough terrain. As always, wear your safety belt. See *Off-Road Driving with Your Four-Wheel-Drive Vehicle on page 4-20* for more tips on off-road driving.

Single Stage vs. Dual Stage Airbags

Depending on the weight of your vehicle you will have either “Single Stage Airbags” or “Dual Stage Airbags”. Vehicles that have a passenger sensing system also have dual stage airbags. If the rearview mirror in your vehicle has a passenger airbag status indicator printed on it, your vehicle has the passenger sensing system and therefore, it has dual stage airbags. If the rearview mirror in your vehicle does not have a passenger airbag status indicator printed on it, then your vehicle does not have the passenger sensing system and it has single stage airbags. See *Passenger Airbag Status Indicator on page 3-36* or *Passenger Sensing System on page 1-76*.

Dual Stage Airbags

If your vehicle has frontal airbags with dual stage deployment, the amount of restraint will adjust according to crash severity. Your vehicle is equipped with electronic frontal sensors which help the sensing system distinguish between a moderate and a more severe frontal impact. For moderate frontal impacts, these airbags inflate at a level less than full deployment. For more severe frontal impacts, full deployment occurs. If the front of your vehicle goes straight into a wall that does not move or deform, the threshold level for the reduced deployment is about 10 to 16 mph (16 to 25 km/h), and the threshold level for a full deployment is about 20 to 25 mph (32 to 40 km/h). (The threshold level can vary, however, with specific vehicle design, so that it can be somewhat above or below this range.)

Vehicle’s with dual stage airbags are also equipped with special sensors which enable the sensing system to monitor the position of both the driver and passenger front seats. The seat position sensor provides information which is used to determine if the airbags should deploy at a reduced level or at full deployment.

Single Stage Airbags

If your vehicle has frontal airbags with single stage deployment and your vehicle goes straight into a wall that does not move or deform, the threshold level is about 13 to 16 mph (20 to 25 km/h). (The threshold level can vary, however, with specific vehicle design, so that it can be somewhat above or below this range.)

What Makes an Airbag Inflate?

In an impact of sufficient severity, the airbag sensing system detects that the vehicle is in a crash. The sensing system triggers a release of gas from the inflator, which inflates the airbag. The inflator, airbag, and related hardware are all part of the airbag modules inside the steering wheel and in the instrument panel in front of the right front passenger.

How Does an Airbag Restrain?

In moderate to severe frontal or near-frontal collisions, even belted occupants can contact the steering wheel or the instrument panel. Airbags supplement the protection provided by safety belts. Airbags distribute the force of the impact more evenly over the occupant's upper body, stopping the occupant more gradually. But airbags would not help you in many types of collisions, including rollovers, rear impacts and many side impacts, primarily because an occupant's motion is not toward those airbags. Airbags should never be regarded as anything more than a supplement to safety belts, and then only in moderate to severe frontal or near-frontal collisions.

What Will You See After an Airbag Inflates?

After an airbag inflates, it quickly deflates, so quickly that some people may not even realize the airbag inflated. Some components of the airbag module – the steering wheel hub for the driver's airbag, or the instrument panel for the right front passenger's bag – will be hot for a short time. The parts of the bag that come into contact with you may be warm, but not too hot to touch. There will be some smoke and dust coming from the vents in the deflated airbags. Airbag inflation does not prevent the driver from seeing or being able to steer the vehicle, nor does it stop people from leaving the vehicle.

⚠ CAUTION:

When an airbag inflates, there is dust in the air. This dust could cause breathing problems for people with a history of asthma or other breathing trouble. To avoid this, everyone in

CAUTION: (Continued)

CAUTION: (Continued)

the vehicle should get out as soon as it is safe to do so. If you have breathing problems but can not get out of the vehicle after an airbag inflates, then get fresh air by opening a window or a door. If you experience breathing problems following an airbag deployment, you should seek medical attention.

In many crashes severe enough to inflate the airbag, windshields are broken by vehicle deformation. Additional windshield breakage may also occur from the right front passenger airbag.

- Airbags are designed to inflate only once. After they inflate, you will need some new parts for your airbag system. If you do not get them, the airbag system will not be there to help protect you in another crash. A new system will include airbag modules and possibly other parts. The service manual for your vehicle covers the need to replace other parts.
- Your vehicle is equipped with a crash sensing and diagnostic module which records information after a crash. See *Vehicle Data Collection and Event Data Recorders on page 7-9*.

- Let only qualified technicians work on your airbag system. Improper service can mean that an airbag system will not work properly. See your dealer for service.

Notice: **If you damage the covering for the driver's or the right front passenger's airbag, the bag may not work properly. You may have to replace the airbag module in the steering wheel or both the airbag module and the instrument panel for the right front passenger's airbag. Do not open or break the airbag coverings.**

Airbag Off Switch

If your instrument panel has one of the switches pictured in the following illustrations your vehicle has an airbag off switch that you can use to turn off the right front passenger's airbag.

United States

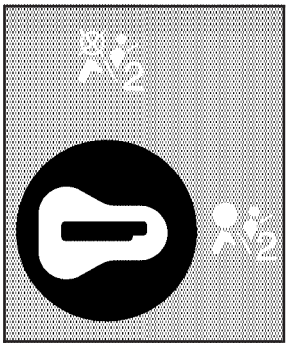

Canada

This switch should only be turned to the off position if the person in the right front passenger's position is a member of a passenger risk group identified by the national government as follows:

Infant. *An infant (less than 1 year old) must ride in the front seat because:*

- *my vehicle has no rear seat;*
- *my vehicle has a rear seat too small to accommodate a rear-facing infant seat; or*
- *the infant has a medical condition which, according to the infant's physician, makes it necessary for the infant to ride in the front seat so that the driver can constantly monitor the child's condition.*

Child age 1 to 12. *A child age 1 to 12 must ride in the front seat because:*

- *my vehicle has no rear seat;*
- *although children ages 1 to 12 ride in the rear seat(s) whenever possible, children ages 1 to 12 sometimes must ride in the front because no space is available in the rear seat(s) of my vehicle; or*
- *the child has a medical condition which, according to the child's physician, makes it necessary for the child to ride in the front seat so that the driver can constantly monitor the child's condition.*

Medical Condition. *A passenger has a medical condition which, according to his or her physician:*

- *causes the passenger airbag to pose a special risk for the passenger; and*
- *makes the potential harm from the passenger airbag in a crash greater than the potential harm from turning off the airbag and allowing the passenger, even if belted, to hit the dashboard or windshield in a crash.*

⚠ CAUTION:

If the right front passenger's airbag is turned off for a person who is not in a risk group identified by the national government, that person will not have the extra protection of an airbag. In a crash, the airbag will not be able to inflate and help protect the person sitting there. Do not turn off the passenger's airbag unless the person sitting there is in a risk group.

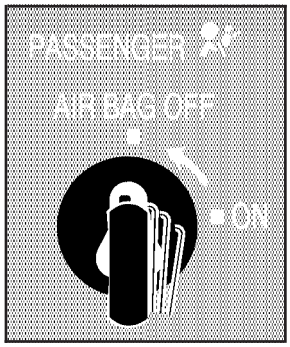

United States

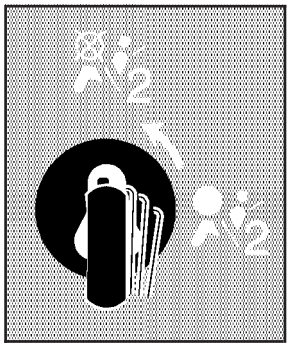

Canada

To turn off the right front passenger's airbag, insert your ignition key into the switch, push in, and move the switch to the off position.

The airbag off light will come on to let you know that the right front passenger's airbag is off. The light will stay on to remind you that the airbag is off. The right front passenger's airbag will remain off until you turn it back on.

⚠ CAUTION:

If the airbag readiness light ever comes on when you have turned off the airbag, it means that something may be wrong with the airbag system. The right front passenger's airbag could inflate even though the switch is off.

If your vehicle is a regular cab pickup or an extended cab pickup and this ever happens, do not let anyone whom the national government has identified as a member of a passenger airbag risk group sit in the right front passenger's position (for example, do not secure a rear-facing child restraint in your vehicle) until you have your vehicle serviced.

United States

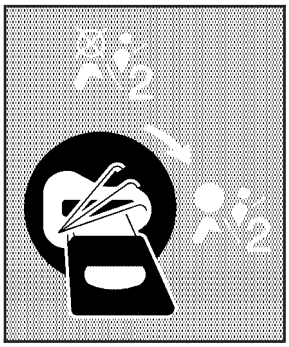

Canada

To turn the right front passenger's airbag on again, insert your ignition key into the switch, push in, and move the switch to the on position.

Passenger Sensing System

If your rearview mirror has one of the indicators pictured in the following illustrations, your vehicle has a passenger sensing system. The indicator will be visible when you turn your ignition key to RUN or START. The words ON and OFF or the symbol for on and off, will be visible on the rearview mirror during the system check. When the system check is complete, either the word ON or the word OFF, or the symbol for on or the symbol for off will be visible. See *Passenger Airbag Status Indicator on page 3-36*. If your rearview mirror does not have either of the indicators pictured below, then your vehicle does not have the passenger sensing system.

Passenger Airbag Status Indicator – United States

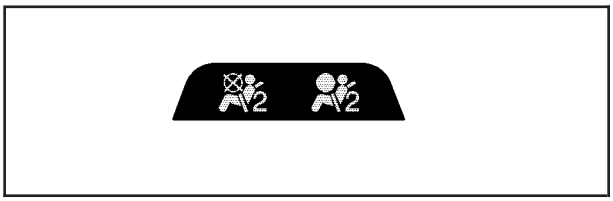

Passenger Airbag Status Indicator – Canada

The passenger sensing system will turn off the right front passenger's frontal airbag under certain conditions. The driver's airbag is not part of the passenger sensing system.

The passenger sensing system works with sensors that are part of the right front passenger's seat and safety belt. The sensors are designed to detect the presence of a properly seated occupant and determine if the passenger's frontal airbag should be enabled (may inflate) or not.

Accident statistics show that children are safer if they are restrained in the rear rather than the front seat. General Motors recommends that child restraints be secured in a rear seat, including an infant riding in a rear-facing infant seat, a child riding in a forward-facing child seat and an older child riding in a booster seat. Never put a child in a rear-facing child restraint in the right front passenger seat unless the passenger airbag status indicator shows off. Never put a rear-facing child restraint in the right front passenger seat unless the airbag is off.

⚠ CAUTION:

A child in a rear-facing child restraint can be seriously injured or killed if the right front passenger's airbag inflates. This is because the back of the rear-facing child restraint

CAUTION: (Continued)

CAUTION: (Continued)

would be very close to the inflating airbag. Be sure the airbag is off before using a rear-facing child restraint in the right front seat position.

Even though the passenger sensing system is designed to turn off the passenger's frontal airbag if the system detects a rear-facing child restraint, no system is fail-safe, and no one can guarantee that an airbag will not deploy under some unusual circumstance, even though it is turned off. General Motors recommends that rear-facing child restraints be secured in a rear seat whenever possible, even if the airbag is off.

The passenger sensing system is designed to turn off the right front passenger's frontal airbag if:

- the right front passenger seat is unoccupied
- the system determines that an infant is present in a rear-facing infant seat
- the system determines that a small child is present in a forward-facing child restraint

- the system determines that a small child is present in a booster seat
- a right front passenger takes his/her weight off of the seat for a period of time
- the right front passenger seat is occupied by a smaller person, such as a child who has outgrown child restraints
- or if there is a critical problem with the airbag system or the passenger sensing system

When the passenger's frontal airbag has been turned off by the passenger sensing system, the off indicator will light and stay lit to remind you that the airbag is off.

If a child restraint has been installed and the on indicator is lit, turn the vehicle off. Remove the child restraint from the vehicle and reinstall the child restraint following the child restraint manufacturer's directions and refer to *Securing a Child Restraint in the Right Front Seat Position (Regular and Extended Cab) (With Airbag Off Switch) on page 1-56* or *Securing a Child Restraint in the Right Front Seat Position (Regular and Extended Cab) (With Passenger Sensing System) on page 1-62*.

If after reinstalling the child restraint and restarting the vehicle, the on indicator is still lit, check to make sure that the vehicle's seatback is not pressing the child restraint into the seat cushion. If this happens, slightly recline the vehicle's seatback and adjust the seat cushion if possible. Also make sure the child restraint is not trapped under the vehicle head restraint. If this happens, adjust the head restraint.

If the on indicator is still lit, secure the child in the child restraint in a rear seat position in the vehicle if one is available and check with your dealer.

The passenger sensing system is designed to enable (may inflate) the right front passenger's frontal airbag anytime the system senses that a person of adult size is sitting properly in the right front passenger's seat. When the passenger sensing system has allowed the airbag to be enabled, the on indicator will light and stay lit to remind you that the airbag is active.

For some children who have outgrown child restraints and for very small adults, the passenger sensing system may or may not turn off the right front passenger's frontal airbag, depending upon the person's seating posture and body build. Everyone in your vehicle who has outgrown child restraints should wear a safety belt properly — whether or not there is an airbag for that person.

If a person of adult-size is sitting in the right front passenger's seat, but the off indicator is lit, it could be because that person is not sitting properly in the seat. If this happens, turn the vehicle off and ask the person to place the seatback in the fully upright position, then sit upright in the seat, centered on the seat cushion, with the person's legs comfortably extended. Restart the vehicle and have the person remain in this position for about two minutes. This will allow the system to detect that person and then enable the passenger's airbag.

⚠ CAUTION:

If the airbag readiness light in the instrument panel cluster ever comes on and stays on, it means that something may be wrong with the airbag system. If this ever happens, have the vehicle serviced promptly, because an adult-size person sitting in the right front passenger's seat may not have the protection of the frontal airbag. See *Airbag Readiness Light on page 3-34* for more on this, including important safety information.

Aftermarket equipment, such as seat covers, can affect how well the passenger sensing system operates. You may want to consider not using seat covers or other aftermarket equipment if your vehicle has the passenger sensing system. See *Adding Equipment to Your Airbag-Equipped Vehicle on page 1-81* for more information about modifications that can affect how the system operates.

⚠ CAUTION:

Stowing of articles under the passenger's seat or between the passenger's seat cushion and seatback may interfere with the proper operation of the passenger sensing system.

Servicing Your Airbag-Equipped Vehicle

Airbags affect how your vehicle should be serviced. There are parts of the airbag system in several places around your vehicle. You do not want the system to inflate while someone is working on your vehicle. Your dealer and the service manual have information about servicing your vehicle and the airbag system. To purchase a service manual, see *Service Publications Ordering Information on page 7-11*.

⚠ CAUTION:

For up to 10 seconds after the ignition key is turned off and the battery is disconnected, an airbag can still inflate during improper service. You can be injured if you are close to an airbag when it inflates. Avoid yellow connectors. They are probably part of the airbag system. Be sure to follow proper service procedures, and make sure the person performing work for you is qualified to do so.

The airbag system does not need regular maintenance.

Adding Equipment to Your Airbag-Equipped Vehicle

Q: Is there anything I might add to the front of the vehicle that could keep the airbags from working properly?

A: Yes. If you add things that change your vehicle's frame, bumper system, front end sheet metal or height, they may keep the airbag system from working properly. Also, the airbag system may not work properly if you relocate any of the airbag sensors. If you have any questions about this, you should contact Customer Assistance before you modify your vehicle. The phone numbers and addresses for Customer Assistance are in Step Two of the Customer Satisfaction Procedure in this manual. See *Customer Satisfaction Procedure on page 7-2*

Q: What if I added a snow plow? Will it keep the airbags from working properly?

A: We have designed our airbag systems to work properly under a wide range of conditions, including snow plowing with vehicles equipped with the optional Snow Plow Prep Package (RPO VYU). But do not change or defeat the snow plow's "tripping mechanism." If you do, it can damage your snow plow and your vehicle, and it may cause an airbag inflation.

Q: Because I have a disability, I have to get my vehicle modified. How can I find out whether this will affect my advanced airbag system?

A: Changing or moving any parts of the front seats, safety belts, the airbag sensing and diagnostic module (located under the driver's seat), or the inside rearview mirror can affect the operation of the advanced airbag system. If you have questions, call Customer Assistance. The phone numbers and addresses for Customer Assistance are in Step Two of the Customer Satisfaction Procedure in this manual. See *Customer Satisfaction Procedure on page 7-2*.

Restraint System Check

Checking Your Restraint Systems

Now and then, make sure the safety belt reminder light and all your belts, buckles, latch plates, retractors and anchorages are working properly. Look for any other loose or damaged safety belt system parts. If you see anything that might keep a safety belt system from doing its job, have it repaired.

Torn or frayed safety belts may not protect you in a crash. They can rip apart under impact forces. If a belt is torn or frayed, get a new one right away.

Also look for any opened or broken airbag covers, and have them repaired or replaced. (The airbag system does not need regular maintenance.)

Replacing Restraint System Parts After a Crash

⚠ CAUTION:

A crash can damage the restraint systems in your vehicle. A damaged restraint system may not properly protect the person using it, resulting in serious injury or even death in a crash. To help make sure your restraint systems are working properly after a crash, have them inspected and any necessary replacements made as soon as possible.

If you have had a crash, do you need new belts or LATCH system parts?

After a very minor collision, nothing may be necessary. But if the belts were stretched, as they would be if worn during a more severe crash, then you need new parts.

If the LATCH system was being used during a more severe crash, you may need new LATCH system parts.

If belts are cut or damaged, replace them. Collision damage also may mean you will need to have LATCH system, safety belt or seat parts repaired or replaced. New parts and repairs may be necessary even if the belt or LATCH system was not being used at the time of the collision.

If an airbag inflates, you will need to replace airbag system parts. See the part on the airbag system earlier in this section.

✍ NOTES

Section 2 Features and Controls

Keys 2-3
Remote Keyless Entry System 2-4
Remote Keyless Entry System Operation 2-5

Doors and Locks 2-8
Door Locks 2-8
Power Door Locks 2-9
Delayed Locking 2-10
Programmable Automatic Door Locks 2-10
Rear Door Security Locks (Crew Cab) 2-13
Lockout Protection 2-13
Rear Doors 2-14
Tailgate 2-15

Windows 2-16
Manual Windows 2-16
Power Windows 2-17
Swing-Out Windows 2-18
Sliding Rear Window 2-18
Sun Visors 2-18

Theft-Deterrent Systems 2-19
Content Theft-Deterrent 2-19
Passlock® 2-21

Starting and Operating Your Vehicle 2-21
New Vehicle Break-In 2-21
Ignition Positions 2-22
Retained Accessory Power (RAP) 2-23
Starting Your Engine 2-23
Engine Coolant Heater 2-25
Automatic Transmission Operation 2-26
Tow/Haul Mode 2-29
Manual Transmission Operation 2-32
Four-Wheel Drive 2-37
Parking Brake 2-48
Shifting Into Park (P)
(Automatic Transmission) 2-49
Shifting Out of Park (P)
(Automatic Transmission) 2-51
Parking Your Vehicle
(Manual Transmission) 2-52
Parking Over Things That Burn 2-52
Engine Exhaust 2-53
Running Your Engine While You Are Parked 2-54

Mirrors 2-55
Manual Rearview Mirror 2-55
Automatic Dimming Rearview Mirror
with OnStar®, Compass and
Temperature Display 2-55
Automatic Dimming Rearview Mirror with
Compass and Temperature Display 2-58
Outside Manual Mirrors 2-60
Outside Camper-Type Mirrors 2-61
Outside West Coast-Type Mirrors 2-61

Section 2 Features and Controls

Outside Power Mirrors 2-62
Outside Power Camper-Type Mirror 2-62
Outside Power Foldaway Mirrors 2-62
Outside Automatic Dimming Mirror 2-63
Outside Curb View Assist Mirrors 2-63
Outside Convex Mirror 2-64
Outside Heated Mirrors 2-64

OnStar® System 2-64

HomeLink® Transmitter 2-66
Programming the HomeLink® Transmitter 2-67

Storage Areas 2-70
Glove Box 2-70
Cupholder(s) 2-70
Coinholder(s) 2-70
Front Storage Area 2-71
Center Console Storage Area 2-71
Tonneau Cover 2-71

Sunroof 2-73

Vehicle Personalization 2-74
Memory Seat 2-74

Keys

⚠ CAUTION:

Leaving children in a vehicle with the ignition key is dangerous for many reasons. They could operate the power windows or other controls or even make the vehicle move. The children or others could be badly injured or even killed. Do not leave the keys in a vehicle with children.

Your vehicle has one double-sided key for the ignition and all door locks as well as the spare tire hoist lock, if equipped.

If you ever lose your keys, your dealer will be able to assist you with obtaining replacements.

Notice: **If you ever lock your keys in your vehicle, you may have to damage the vehicle to get in. Be sure you have spare keys.**

If you ever do get locked out of your vehicle, call the GM Roadside Assistance Center. See *Roadside Assistance Program on page 7-5*. If your vehicle is equipped with the OnStar® system with an active subscription and you lock your keys inside the vehicle, OnStar® may be able to send a command to unlock your vehicle. See *OnStar® System on page 2-64* for more information.

Remote Keyless Entry System

If equipped, the remote keyless entry system operates on a radio frequency subject to Federal Communications Commission (FCC) Rules and with Industry Canada.

This device complies with Part 15 of the FCC Rules. Operation is subject to the following two conditions:

1. This device may not cause interference, and
2. This device must accept any interference received, including interference that may cause undesired operation of the device.

This device complies with RSS-210 of Industry Canada. Operation is subject to the following two conditions:

1. This device may not cause interference, and
2. This device must accept any interference received, including interference that may cause undesired operation of the device.

Changes or modifications to this system by other than an authorized service facility could void authorization to use this equipment.

At times you may notice a decrease in range. This is normal for any remote keyless entry system. If the transmitter does not work or if you have to stand closer to your vehicle for the transmitter to work, try this:

- Check the distance. You may be too far from your vehicle. You may need to stand closer during rainy or snowy weather.
- Check the location. Other vehicles or objects may be blocking the signal. Take a few steps to the left or right, hold the transmitter higher, and try again.
- Check to determine if battery replacement or resynchronization is necessary. See “Battery Replacement” and “Resynchronization” under *Remote Keyless Entry System Operation on page 2-5*.
- If you are still having trouble, see your dealer or a qualified technician for service.

Remote Keyless Entry System Operation

You can lock and unlock your doors from about 3 feet (1 m) up to 100 feet (30 m) away using the remote keyless entry transmitter supplied with your vehicle.

(Unlock): Press this button once to unlock the driver’s door. The interior lamps will come on. Pressing unlock again within three seconds will cause the remaining doors to unlock.

You can choose different feedback options for each press of the unlock button. See “Lock Feedback” and “Unlock Feedback” under *DIC Vehicle Customization on page 3-63* for more information.

(Lock): Press this button once to lock all of the doors. Pressing lock again within three seconds may cause the horn to chirp for lock confirmation. You can choose different feedback options for each press of the lock button. See “Lock Feedback” and “Unlock Feedback” under *DIC Vehicle Customization on page 3-63* for more information.

(Panic): Press this button to sound the horn and flash the headlamps and taillamps for up to 30 seconds. Panic can be turned off by pressing the button again, by waiting for 30 seconds, or by starting the vehicle.

Matching Transmitter(s) to Your Vehicle

Each remote keyless entry transmitter is coded to prevent another transmitter from unlocking your vehicle. If a transmitter is lost or stolen, a replacement can be purchased through your dealer. Remember to bring any remaining transmitters with you when you go to your dealer. When the dealer matches the replacement transmitter to your vehicle, any remaining transmitters must also be matched. Once your dealer has coded the new transmitter, the lost transmitter will not unlock your vehicle. Each vehicle can have a maximum of four transmitters matched to it.

Battery Replacement

Under normal use, the battery in your remote keyless entry transmitter should last about two years.

You can tell the battery is weak if the transmitter will not work at the normal range in any location. If you have to get close to your vehicle before the transmitter works, it is probably time to change the battery.

Notice: **When replacing the battery, use care not to touch any of the circuitry. Static from your body transferred to these surfaces may damage the transmitter.**

To replace the battery in the keyless entry transmitter, do the following:

1. Insert a thin object, such as a coin, in the slot between the covers of the transmitter housing near the key ring hole. Remove the bottom by twisting the coin.
2. Remove and replace the battery with a three-volt CR2032 or equivalent battery, positive (+) side up.
3. Align the covers and snap them together.
4. Resynchronize the transmitter. See “Resynchronization” following this information.
5. Check the operation of the transmitter.

Resynchronization

Resynchronization may be necessary due to the security method used by this system. The transmitter does not send the same signal twice to the receiver. The receiver will not respond to a signal that has been sent previously. This prevents anyone from recording and playing back the signal from the transmitter.

To resynchronize your transmitter, stand close to your vehicle and press and hold the lock and unlock buttons on the transmitter at the same time for 15 seconds. The door locks should cycle to confirm synchronization. If the locks do not cycle, see your dealer for service.

Doors and Locks

Door Locks

⚠ CAUTION:

Unlocked doors can be dangerous.

- **Passengers — especially children — can easily open the doors and fall out of a moving vehicle. When a door is locked, the handle will not open it. You increase the chance of being thrown out of the vehicle in a crash if the doors are not locked. So, wear safety belts properly and lock the doors whenever you drive.**
- **Young children who get into unlocked vehicles may be unable to get out. A child can be overcome by extreme heat and can suffer permanent injuries or even death from heat stroke. Always lock your vehicle whenever you leave it.**
- **Outsiders can easily enter through an unlocked door when you slow down or stop your vehicle. Locking your doors can help prevent this from happening.**

There are several ways to lock and unlock your vehicle.

You can use the keyless entry system, if equipped, or you can also use your key.

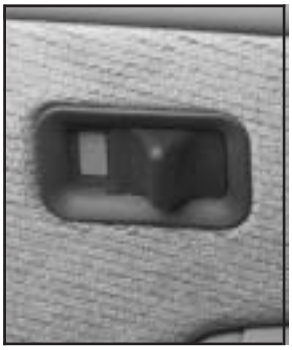

To lock the door from the inside, slide the lever rearward. To unlock the door, slide the lever forward.

Power Door Locks

If your vehicle has this power door lock switch, press the raised side of the switch, with the lock symbol, on either front door to lock all the doors at once.

Press the recessed side of the switch with the unlock symbol, to unlock all the doors at once.

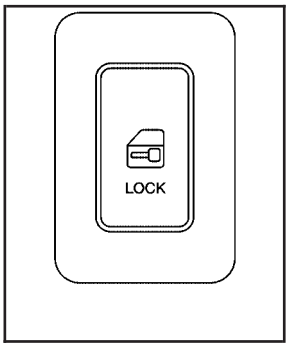

If your vehicle has this power door lock switch, press the bottom of the switch on either front door to lock all the doors at once.

Press the top of the switch to unlock all the doors at once.

The power door locks will operate at any time even when the ignition is off.

The power door locks will also automatically lock when the vehicle is out of PARK (P), or for manual transmission, when the vehicle reaches 8 mph (24 km/h).

Operating the power locks may interact with the theft-deterrent system, if equipped. See *Content Theft-Deterrent on page 2-19*.

Delayed Locking

If your vehicle is a crew cab, it may be equipped with this feature. When locking the doors with the power lock switch or the keyless entry transmitter and a door is open, the doors will not lock until five seconds after the last door is closed. You will hear three chimes to signal that the delayed locking feature is in use.

Pressing the power lock switch or the lock button on the keyless entry transmitter twice will override the delayed locking feature and immediately lock all the doors.

You can turn the delayed locking feature off or back on again by doing the following:

1. Press and hold the power door lock switch in the lock position.
2. Press unlock twice on the remote keyless entry transmitter.

This feature will not operate if the key is in the ignition.

You can also program this feature using the DIC. See *DIC Vehicle Customization on page 3-63*.

Programmable Automatic Door Locks

Your vehicle may be equipped with an automatic lock/unlock feature which enables you to program your vehicle's power door locks. You can program this feature through the Driver Information Center (DIC), or by the following method. See *DIC Vehicle Customization on page 3-63*.

Programmable Locking Feature

Following are the two available programming options:

Mode 1: All doors lock when the transmission is shifted into gear. This is the mode that is pre-programmed in the factory for your vehicle for automatic transmission vehicles.

Mode 2: All doors lock when the vehicle speed is greater than 8 mph (13 km/h). This is the mode that is pre-programmed in the factory for manual transmission vehicles.

The following instructions tell you how to change the automatic door lock mode (automatic transmission only). Choose one of the two programming options listed above before entering the program mode. To enter the program mode, do the following:

1. Begin with the ignition off. Then pull the turn signal/multifunction lever toward you and hold it there while you perform the next step.
2. Turn the key to RUN then back to LOCK twice. Then, with the key in LOCK, release the turn signal/multifunction lever. Once you do this, the doors will lock and unlock, the horn will chirp twice, and a 30-second timer will begin. You are now ready to program the automatic door lock feature.
3. Press the door lock switch once. You will hear either one or two chimes. The number of chimes tells you which lock mode is currently selected. Continue to press the door lock switch until the number of chimes that you hear matches the number of the mode that you want. If you take longer than 30 seconds, the locks will automatically lock and unlock and the horn will chirp twice to indicate that you have left the program mode. If this occurs, you can repeat the procedure beginning with Step 1 to re-enter the programming mode.

You can exit the program mode any time by turning the ignition to RUN (the doors will automatically lock and unlock and the horn will chirp twice to indicate that you are leaving the program mode). If the lock/unlock switches are not pressed while in the programming mode, the current automatic settings will not be modified.

See your dealer for more information.

Programmable Unlocking Feature

The following is the list of available programming options:

Mode 1: Driver's door unlocks when the transmission is shifted into PARK (P), for automatic transmission vehicles only.

Mode 2: All doors unlock when the transmission is shifted into PARK (P), for automatic transmission vehicles only. This is the mode that is pre-programmed in the factory for your vehicle.

Mode 3: All doors unlock when the key is removed from the ignition. This is the mode that is pre-programmed in the factory for manual transmission vehicles.

Mode 4: No automatic door unlock.

The following instructions tell you how to change the automatic door unlock mode (automatic transmission only). Choose one of the four programming options listed above before entering the program mode. To enter the program mode, do the following:

1. Begin with the ignition off. Then pull the turn signal/multifunction lever toward you and hold it there while you perform the next step.
2. Turn the key to RUN and LOCK twice. Then, with the key in LOCK, release the turn signal/multifunction lever. Once you do this, the doors will lock and unlock, the horn will chirp twice, and a 30-second timer will begin. You are now ready to program the automatic door unlock feature.
3. Press the door unlock switch once. You will hear one, two, three, or four chimes. The number of chimes tells you which unlock mode is currently selected. Continue to press the door unlock switch until the number of chimes that you hear matches the number of the mode that you want. If you take longer than 30 seconds, the locks will automatically lock and unlock and the horn will chirp twice to indicate that you have left the program mode. If this occurs, you can repeat the procedure beginning with Step 1 to re-enter the programming mode.

You can exit the program mode any time by turning the ignition to RUN. The doors will automatically lock and unlock and the horn will chirp twice to indicate that you are leaving the program mode. If the lock/unlock switches are not pressed while in the programming mode, the current automatic settings will not be modified.

See your dealer for more information.

Rear Door Security Locks (Crew Cab)

With this feature, you can lock the rear side doors so that they cannot be opened from the inside by passengers.

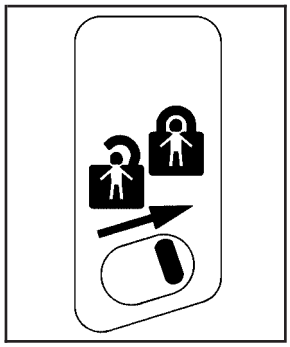

This feature is located on the inside edge of the rear doors.

To use one of the locks do the following:

1. Open one of the rear doors.
2. To engage the rear door security lock, move the lever forward.
3. To disengage the lock, move the lever rearward.
4. Close the door.
5. Do the same thing to the other rear door.

The rear doors of your vehicle cannot be opened from the inside when this feature is in use. If you want to open the rear door while the security lock is engaged, unlock the door and open the door from the outside.

Lockout Protection

This feature protects you from locking your key in the vehicle when the key is in the ignition and a door is open.

If the power lock switch is pressed when a door is open and the key is in the ignition, all of the doors will lock and then the driver's door will unlock.

Rear Doors

Extended Cab

Your vehicle may be equipped with a rear access door(s) that allows easier access to the rear area of the extended cab.

To open a rear access door from the outside, first open the front door. Then, use the handle located on the front edge of the rear access door to open it.

You must fully close a rear access door before you can close the front door.

To open a rear access door from the inside, the front door must be opened first. Then, use the handle located on the inside of the rear access door to open it.

Crew Cabs

If your vehicle is a crew cab, you can open your doors from the inside or outside. Your vehicle may also have a feature which prevents children from opening the rear doors. See *Rear Door Security Locks (Crew Cab) on page 2-13* for more information.

Tailgate

You can open the tailgate by lifting up on its handle while pulling the tailgate toward you.

To shut the tailgate, firmly push it upward until it latches.

After you put the tailgate back up, pull it back towards you to be sure it latches securely.

Tailgate Removal

The tailgate on your vehicle can be removed to allow for different loading situations. Although the tailgate can be removed without assistance, you may want someone to assist you with the removal to avoid possible damage to the vehicle.

To remove the tailgate, do the following:

1. Raise the tailgate slightly and release both retaining cable clips. To release the retaining cable clips, lift the cable so it points straight out and push the cable clip forward.

2. With the tailgate at a slight upward angle, pull back on the tailgate at the right edge and then move the tailgate to the right to release the left edge.

Reverse the above procedure to reinstall. Make sure the tailgate is secure.

Windows

⚠ CAUTION:

Leaving children, helpless adults, or pets in a vehicle with the windows closed is dangerous. They can be overcome by the extreme heat and suffer permanent injuries or even death from heat stroke. Never leave a child, a helpless adult, or a pet alone in a vehicle, especially with the windows closed in warm or hot weather.

Manual Windows

Turn the hand crank on each door to manually raise or lower the manual windows.

Power Windows

If your vehicle is equipped with power windows, the controls are located on each of the side doors in the front and rear for crew cab models.

The driver's door has a switch for the passenger's and rear windows as well, if equipped. Your power windows will work when the ignition has been turned to ACCESSORY or RUN or when Retained Accessory Power (RAP) is active. See *Retained Accessory Power (RAP) on page 2-23*.

Press the switch down to lower the window.

Pull up the front of the switch to raise the window.

Express Down Windows

The driver and front passenger windows also have an express down feature that allows the windows to be lowered without holding the switch. Press down fully on the window switch, then release, to activate the express down mode. The express down mode can be canceled at any time by pulling up on the switch. To open the window partway, press the switch to the first depression position, until the window is at the desired position.

Lock-Out Switch

If you have power windows on a crew cab, the driver's door power window switch has a lockout feature. The lockout switch is located in front of the window switches. This feature prevents all windows from operating, except from the driver's position. To engage the lock-out feature press the switch, and an indicator light on the switch will illuminate. To disengage the lock-out feature press the switch again, and the indicator light will turn off.

Swing-Out Windows

Your vehicle may have swing-out windows. To open a rear swing-out window, flip the latch open and swing the glass out.

The latch will catch when the window is fully open and it will also hold it in the open position.

Sliding Rear Window

If your vehicle has this feature, squeeze the latch in the center of the window and slide the glass to open it.

When you close the window, be sure the latch is engaged.

The sliding rear window does not have rear defogger. However, if your vehicle has outside heated mirrors, it will have a defogger button. See *Outside Heated Mirrors on page 2-64*.

Sun Visors

To block out glare, you can swing down the visors. You can also swing them out to help block glare at the front and side windows.

The passenger's side sun visor may have a vanity mirror.

Theft-Deterrent Systems

Vehicle theft is big business, especially in some cities. Although your vehicle has a number of theft-deterrent features, we know that nothing we put on it can make it impossible to steal.

Content Theft-Deterrent

Your vehicle may be equipped with a content theft-deterrent alarm system.

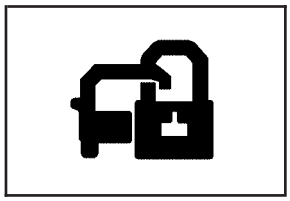

With this system, the security light will flash as you open the door, with the ignition off, to let you know that you are activating the system.

This message reminds you to activate the theft-deterrent system. Here's how to do it:

1. Open the door.
2. Lock the door with the power door lock switch or the remote keyless entry transmitter. The security light should come on and flash. If using the remote keyless entry transmitter, the door does not need to be open.

   If the delayed locking feature is active, the alarm will not be activated until all doors are closed and the security light goes off.
3. Close all doors. The security light will stop flashing and stay solid. The light should go off after approximately 30 seconds. The alarm is not armed until the security light goes off.

If a door is opened without the key or the remote keyless entry transmitter, the alarm will go off. Your vehicle's headlamps will flash and the horn will sound for about two minutes, then will turn off to save the battery power.

Remember, the theft-deterrent system won't activate if you lock the doors with a key or use the manual door lock. It activates only if you use a power door lock switch with the door open, or with the remote keyless entry transmitter. You should also remember that you can start your vehicle with the correct ignition key if the alarm has been set off.

Here's how to avoid setting off the alarm by accident:

- If you don't want to activate the theft-deterrent system, the vehicle should be locked with the door key *after* the doors are closed.
- Always unlock a door with a key, or use the remote keyless entry transmitter. Unlocking a door any other way will set off the alarm if the system has been armed.

If you set off the alarm by accident, unlock any door with the key. You can also turn off the alarm by pressing UNLOCK on the remote keyless entry transmitter or by placing the key in the ignition and turning it to START.

Testing the Alarm

The alarm can be tested by following these steps:

1. From inside the vehicle, lower the driver's window and open the driver's door.
2. Activate the system by locking the doors with the power door lock switch while the door is open, or with the remote keyless entry transmitter.
3. Get out of the vehicle, close the door and wait for the security light to go out.
4. Then reach in through the window, unlock the door with the manual door lock and open the door. This should set off the alarm.

If the alarm does not sound when it should but the vehicle's headlamps flash, check to see if the horn works. The horn fuse may be blown. To replace the fuse, see *Fuses and Circuit Breakers on page 5-122*.

If the alarm does not sound or the vehicle's headlamps do not flash, the vehicle should be serviced by an authorized service center.

Passlock®

Your vehicle is equipped with the Passlock® theft-deterrent system.

Passlock® is a passive theft-deterrent system. Passlock® enables fuel if the ignition lock cylinder is turned with a valid key. If a correct key is not used or the ignition lock cylinder is tampered with, fuel is disabled.

If the engine stalls and the security light flashes, wait until the light stops flashing before trying to restart the engine. Remember to release the key from START as soon as the engine starts.

If the engine is running and the security light comes on, you will be able to restart the engine if you turn the engine off. However, your Passlock® system is not working properly and must be serviced by your dealer. Your vehicle is not protected by Passlock® at this time. You may also want to check the fuse. See *Fuses and Circuit Breakers on page 5-122*. See your dealer for service.

In an emergency, call the GM Roadside Assistance Center. See *Roadside Assistance Program on page 7-5*.

Starting and Operating Your Vehicle

New Vehicle Break-In

Notice: **Your vehicle does not need an elaborate break-in. But it will perform better in the long run if you follow these guidelines:**

- **Keep your speed at 55 mph (88 km/h) or less for the first 500 miles (805 km).**
- **Do not drive at any one speed — fast or slow — for the first 500 miles (805 km). Do not make full-throttle starts.**
- **Avoid making hard stops for the first 200 miles (322 km) or so. During this time your new brake linings are not yet broken in. Hard stops with new linings can mean premature wear and earlier replacement. Follow this breaking-in guideline every time you get new brake linings.**
- **Do not tow a trailer during break-in. See *Towing a Trailer on page 4-68* for more information.**

Ignition Positions

With the key in the ignition switch, you can turn it to four different positions.

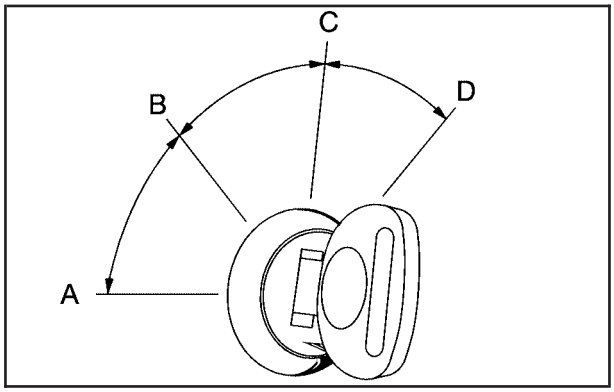

Notice: **If your key seems stuck in LOCK and you cannot turn it, be sure you are using the correct key; if so, is it all the way in? Turn the key only with your hand. Using a tool to force it could break the key or the ignition switch. If none of these works, then your vehicle needs service.**

A (Lock): This position locks your ignition when the key is removed. The steering locks when equipped with a manual transmission. It is a theft-deterrent feature. You will only be able to remove your key when the ignition is turned to LOCK.

B (Accessory): This position allows you to use things like the radio, power windows and the windshield wipers when the engine is off.

⚠ CAUTION:

On manual transmission vehicles, turning the key to LOCK will lock the steering column and result in a loss of ability to steer the vehicle. This could cause a collision. If you need to turn the engine off while the vehicle is moving, turn the key only to ACCESSORY. Do not press the key release button while the vehicle is moving.

C (Run): This is the position for driving.

D (Start): This position starts your engine.

Key Release Button (Manual Transmission)

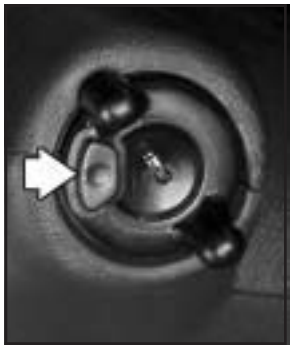

The ignition key cannot be removed from the ignition of manual transmission vehicles unless the key release button is used.

To remove the key on manual transmission vehicles, turn the key to ACCESSORY, then press the button and turn the key to LOCK. Do not hold the button in while turning the key to ACCESSORY. Pull the key straight out.

Retained Accessory Power (RAP)

If the vehicle has Retained Accessory Power (RAP), certain features will continue to operate for up to 10 minutes after the ignition key is turned to LOCK unless a door is opened.

Starting Your Engine

Your vehicle is equipped with Starter Motor Control. This feature assists in starting the engine and protects the electrical system. This feature may cause the engine to crank even after the ignition key is not in START.

Automatic Transmission

Move your shift lever to PARK (P) or NEUTRAL (N). Your engine will not start in any other position — that is a safety feature. To restart when you are already moving, use NEUTRAL (N) only. If you have a diesel engine refer to the diesel supplement for the starting procedure.

Notice: **Do not try to shift to PARK (P) if your vehicle is moving. If you do, you could damage the transmission. Shift to PARK (P) only when your vehicle is stopped.**

Manual Transmission

The gear selector should be in neutral and the parking brake engaged. Hold the clutch pedal to the floor and start the engine. Your vehicle will not start if the clutch pedal is not all the way down — that is a safety feature.

Starting Your V8 Engine

1. With your foot off the accelerator pedal, turn the ignition key to START. When the engine starts, let go of the key. The idle speed will go down as your engine gets warm.

Notice: **Holding your key in START for longer than 15 seconds at a time will disengage the starter motor, cause your battery to be drained much sooner, and add excessive heat that can damage your starter motor. Try not to hold the key in START for longer than 15 seconds and wait about 15 seconds between each try to help avoid draining your battery or damaging your starter.**

2. If it does not start within 10 seconds, push the accelerator pedal all the way to the floor, while you hold the ignition key in START. When the engine starts, let go of the key and let up on the accelerator pedal. Wait about 15 seconds between each try.

When starting your engine in very cold weather (below 0°F or –18°C), do this:

1. With your foot off the accelerator pedal, turn the ignition key to START and hold it there up to 15 seconds. When the engine starts, let go of the key.
2. If your engine still will not start, or starts but then stops, it could be flooded with too much gasoline. Try pushing your accelerator pedal all the way to the floor and holding it there as you hold the key in START for about three seconds. When the engine starts, let go of the key and accelerator. If the vehicle starts briefly but then stops again, do the same thing, but this time keep the pedal down for five or six seconds. This clears the extra gasoline from the engine.

Notice: **Your engine is designed to work with the electronics in your vehicle. If you add electrical parts or accessories, you could change the way the engine operates. Before adding electrical equipment, check with your dealer. If you do not, your engine might not perform properly.**

Engine Coolant Heater

In very cold weather, 0°F (–18°C) or colder, the engine coolant heater can help. You will get easier starting and better fuel economy during engine warm-up. Usually, the coolant heater should be plugged in a minimum of four hours prior to starting your vehicle. At temperatures above 32°F (0°C), use of the coolant heater is not required. Your vehicle may also have an internal thermostat in the plug end of the cord. This will prevent operation of the engine coolant heater when the temperature is at or above 0°F (–18 C°) as noted on the cord.

To Use the Engine Coolant Heater

1. Turn off the engine.
2. Open the hood and unwrap the electrical cord. The cord is located on the driver's side of the engine compartment, near the power steering fluid reservoir. If you have a diesel engine, refer to diesel supplement for location.
3. Plug it into a normal, grounded 110-volt AC outlet.

⚠ CAUTION:

Plugging the cord into an ungrounded outlet could cause an electrical shock. Also, the wrong kind of extension cord could overheat and cause a fire. You could be seriously injured. Plug the cord into a properly grounded three-prong 110-volt AC outlet. If the cord will not reach, use a heavy-duty three-prong extension cord rated for at least 15 amps.

4. Before starting the engine, be sure to unplug and store the cord as it was before to keep it away from moving engine parts. If you do not, it could be damaged.

How long should you keep the coolant heater plugged in? The answer depends on the outside temperature, the kind of oil you have, and some other things. Instead of trying to list everything here, we ask that you contact your dealer in the area where you will be parking your vehicle. The dealer can give you the best advice for that particular area.

Automatic Transmission Operation

If your vehicle is equipped with an automatic transmission, it features an electronic shift position indicator within the instrument panel cluster. This display must be powered anytime the shift lever is capable of being moved out of PARK (P). See *Fuses and Circuit Breakers on page 5-122*.

There are several different positions for your shift lever.

PARK (P): This position locks your rear wheels. It is the best position to use when you start your engine because your vehicle cannot move easily. If your vehicle is equipped with the Allison Transmission®, use PARK (P) for stationary operation of the Power Takeoff (PTO), if equipped. The Allison Transmission® is equipped with park pawl designed to hold the higher weight of commercial medium duty trucks. Therefore, the Allison Transmission® uses larger parts than other automatic transmission. These larger parts may sometimes make a clunk noise when the selector lever is moved from DRIVE (D) or REVERSE (R) to PARK (P). This is normal and there is no damage occurring during these shifts.

⚠ CAUTION:

It is dangerous to get out of your vehicle if the shift lever is not fully in PARK (P) with the parking brake firmly set. Your vehicle can roll.

Do not leave your vehicle when the engine is running unless you have to. If you have left the engine running, the vehicle can move suddenly. You or others could be injured. To be sure your vehicle will not move, even when you are on fairly level ground, always set your parking brake and move the shift lever to PARK (P). See *Shifting Into Park (P) (Automatic Transmission) on page 2-49*. If you are pulling a trailer, see *Towing a Trailer on page 4-68*.

⚠ CAUTION:

If you have four-wheel drive, your vehicle will be free to roll — even if your shift lever is in PARK (P) — if your transfer case is in NEUTRAL. So, be sure the transfer case is in a drive gear, two-wheel high (2H) or four-wheel high (4H) or four-wheel low (4L) — not in NEUTRAL. See *Shifting Into Park (P) (Automatic Transmission) on page 2-49*.

REVERSE (R): Use this gear to back up. If your vehicle is equipped with the Allison Transmission®, the R may blink on the PRNDL if the shift inhibitor is active.

Notice: **Shifting to REVERSE (R) while your vehicle is moving forward could damage the transmission. The repairs would not be covered by your warranty. Shift to REVERSE (R) only after your vehicle is stopped.**

To rock your vehicle back and forth to get out of snow, ice or sand without damaging your transmission, see *If You Are Stuck: In Sand, Mud, Ice or Snow on page 4-48*.

NEUTRAL (N): In this position, your engine does not connect with the wheels. To restart when you are already moving, use NEUTRAL (N) only. Also, use NEUTRAL (N) when your vehicle is being towed.

⚠ CAUTION:

Shifting into a drive gear while your engine is running at high speed is dangerous. Unless your foot is firmly on the brake pedal, your vehicle could move very rapidly. You could lose control and hit people or objects. Do not shift into a drive gear while your engine is running at high speed.

Notice: **Shifting out of PARK (P) or NEUTRAL (N) with the engine running at high speed may damage the transmission. The repairs would not be covered by your warranty. Be sure the engine is not running at high speed when shifting your vehicle.**

DRIVE (D): This position is for normal driving. If you need more power for passing, and you are:

- Going less than about 35 mph (55 km/h), push your accelerator pedal about halfway down.
- Going about 35 mph (55 km/h) or more, push the accelerator all the way down.

You will shift down to the next gear and have more power.

DRIVE (D) can be used when towing a trailer, carrying a heavy load, driving on steep hills or for off-road driving. You may want to shift the transmission to THIRD (3) or, if necessary, a lower gear selection if the transmission shifts too often.

If your vehicle is equipped with the Allison Transmission®, it will initially attain first range when DRIVE (D) is selected. As vehicle speed increases, the transmission will upshift automatically through each available range up to FIFTH (5). As the vehicle slows, the transmission will downshift automatically.

The Allison Transmission® uses a shift stabilization feature to adjust the transmission shift schedule to the current driving situation to reduce rapid upshifts and downshifts. This shift stabilization feature is designed to determine before making an upshift if the engine will be able to maintain vehicle speed by analyzing things such as throttle position, vehicle load, and hill grade. If the shift stabilization feature determines that current vehicle speed cannot be maintained, the transmission does not upshift and instead holds the current gear. In some cases, this may appear to be a hanging shift, however the transmission is operating normally.

The Allison Transmission® also uses adaptive shift controls. Adaptive shift controls continually compares key shift parameters to pre-programmed ideal shift conditions. The Allison Transmission® constantly makes adjustments to improve vehicle performance according to the way the vehicle is being used, such as with a heavy load. During this adaptive shift controls process, some shifts may feel different as the transmission determines optimum settings for a particular shift.

By using shift stabilization and adaptive shift controls, the Allison Transmission® shift schedule is variable and adjusts to how the vehicle is being used, providing improved vehicle performance.

THIRD (3): This position is also used for normal driving, however it offers more power and lower fuel economy than DRIVE (D).

SECOND (2): This position gives you more power but lower fuel economy. You can use SECOND (2) on hills. It can help control your speed as you go down steep mountain roads, but then you would also want to use your brakes off and on.

If you manually select SECOND (2) in a light duty automatic transmission, the transmission will drive in second gear. You may use this feature for reducing the speed of the rear wheels when you are trying to start your vehicle from a stop on slippery road surfaces.

FIRST (1): This position gives you even more power (but lower fuel economy) than SECOND (2). You can use it on very steep hills, or in deep snow or mud. If the selector lever is put in FIRST (1) while the vehicle is moving forward, the transmission will not shift into first gear until the vehicle is going slowly enough.

Notice: **Spinning the tires or holding the vehicle in one place on a hill using only the accelerator pedal may damage the transmission. If you are stuck, do not spin the tires. When stopping on a hill, use the brakes to hold the vehicle in place.**

On cold days, approximately 32°F (0°C) or colder, your transmission is designed to shift differently. The transmission uses a warm-up mode shift schedule until the engine reaches normal operating temperature. While the transmission is in warm-up mode it is normal for transmission upshifts to be delayed or held longer. This feature improves heater performance by giving quicker vehicle warm-ups.

Tow/Haul Mode

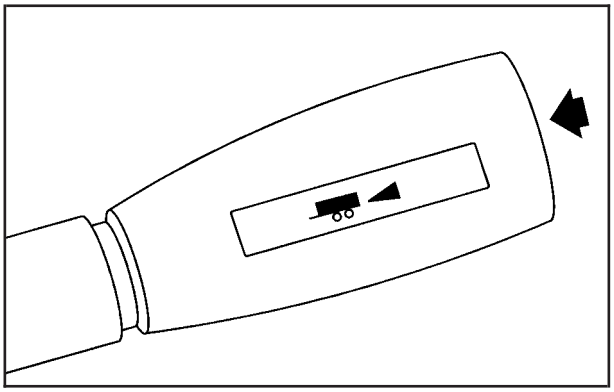

If your vehicle has an automatic transmission, it may be equipped with a Tow/Haul mode. The selector button is located on the end of the column shift lever. You can use this feature to assist when towing or hauling a heavy load. Turn Tow/Haul on and off by pressing the button until the Tow/Haul indicator light illuminates on the instrument panel.

Tow/Haul is a feature on automatic transmission equipped vehicles that assists when pulling a heavy trailer or large or heavy load. Tow/Haul mode adjusts the transmission's shift pattern to reduce shift cycling, providing increased performance, vehicle control, and transmission cooling when towing or hauling heavy loads.

If your vehicle is equipped with an Allison® transmission, you may have both Tow/Haul mode and overdrive disable. See "Tow/Haul Mode" under *Towing a Trailer on page 4-68* for more information.

Grade Braking (Allison Transmission® Only)

Grade braking uses the engine and transmission to slow a loaded vehicle on hills in addition to using the brakes, saving on brake wear and increasing vehicle stability. The Allison Transmission®, when sensing the driver's desire to slow down while driving downhill, will automatically shift to the next lower gear range to assist in slowing down the vehicle. Grade braking is active and automatic both in Tow/Haul mode and normal shift mode. Grade braking is more aggressive when in Tow/Haul mode and can automatically downshift to SECOND (2), which is different than grade braking while in normal shift mode where automatic downshifts are limited to FOURTH (4).

The tachometer for both the diesel and gasoline engine shows a dashed red zone and a solid red zone. The dashed red zone indicates where a transmission shift occurs for full engine power. When using grade braking, the transmission's shift point is adjusted to just prior to the solid red zone, providing the benefit of additional engine braking.

Grade braking driving within the dashed red zone is normal, both the diesel and gasoline engine have been designed for this grade braking feature. Do not allow the engine to go into the solid red zone. Apply the vehicle's brakes for a short time to slow down if you are driving on a long hill and the tachometer needle enters the solid red zone. See *Towing a Trailer on page 4-68* for more information.

Overdrive Disable (Allison® Transmission Only)

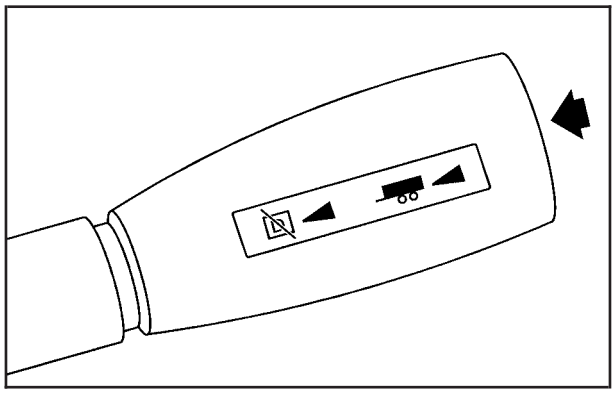

If your vehicle has an Allison Transmission®, you may have the overdrive disable feature. The overdrive disable feature prevents the transmission from shifting into FIFTH (5) gear. The selector button is located on the end of the column shift lever. You can turn overdrive disable on and off by pressing and holding the button at the end of the column shift lever until the indicator light, on the instrument panel, illuminates.

If your vehicle has both Tow/Haul and overdrive disable, tap the button once to enable or disable Tow/Haul, and press and hold the button to enable or disable overdrive disable.

Manual Transmission Operation

Five-Speed (VORTEC™ 6000 V8 Engine)

Here is how to operate your transmission.

FIRST (1) is intended only for heavy loads or trailer towing and is not recommended for normal driving.

During the first 500 miles (805 km) of vehicle use, start your vehicle moving in FIRST (1). This allows clutch components to break-in properly.

FIRST (1): Press the clutch pedal and shift into FIRST (1). Then, slowly let up on the clutch pedal as you press the accelerator pedal. Shift into FIRST (1) only when the vehicle is below 5 mph (8 km/h). If you try to shift down into FIRST (1) at excessive vehicle speeds, the shift lever will not move into FIRST (1) until vehicle speed is reduced.

SECOND (2): Press the clutch pedal and shift into SECOND (2). Then, slowly let up on the clutch pedal as you press the accelerator pedal.

You can shift into SECOND (2) when you are going less than 20 mph (32 km/h). If you have come to a complete stop and it is hard to shift into SECOND (2), put the shift lever into NEUTRAL and let up on the clutch. Press the clutch pedal back down. Then shift into SECOND (2). If you try to downshift into SECOND (2) at excessive vehicle speeds, the shift lever will not move into the SECOND (2) position until the vehicle speed is reduced.

THIRD (3): Press the clutch pedal and shift into THIRD (3). Then, slowly let up on the clutch pedal as you press the accelerator pedal.

FOURTH (4) and FIFTH (5): Shift into the higher forward gears the same way you do for THIRD (3). Slowly let up on the clutch pedal as you press the accelerator pedal.

To stop, let up on the accelerator pedal and press the brake pedal. Just before the vehicle stops, press the clutch pedal and the brake pedal, and shift to NEUTRAL.

NEUTRAL: Use this position when you start or idle your engine.

REVERSE (R): To back up, first press down the clutch pedal. Wait for the vehicle to stop moving and then, shift into REVERSE (R). Let up on the clutch pedal slowly while pressing the accelerator pedal.

Notice: **Shifting to REVERSE (R) while your vehicle is moving forward could damage the transmission. The repairs would not be covered by your warranty. Shift to REVERSE (R) only after your vehicle is stopped.**

Also, use REVERSE (R), along with the parking brake, when turning off your engine and parking your vehicle.

Five-Speed (VORTEC™ 4300 V6 and 4800 V8 Engines)

Here is how to operate your transmission:

FIRST (1): Press the clutch pedal and shift into FIRST (1). Then, slowly let up on the clutch pedal as you press the accelerator pedal.

You can shift into FIRST (1) when you are going less than 20 mph (32 km/h). If you have come to a complete stop and it is hard to shift into FIRST (1), put the shift lever into NEUTRAL and let up on the clutch. Press the clutch pedal back down. Then shift into FIRST (1).

SECOND (2): Press the clutch pedal as you let up on the accelerator pedal and shift into SECOND (2). Then, slowly let up on the clutch pedal as you press the accelerator pedal.

THIRD (3), FOURTH (4) and FIFTH (5): Shift into THIRD (3), FOURTH (4) and FIFTH (5) the same way you do for SECOND (2). Slowly let up on the clutch pedal as you press the accelerator pedal.

To stop, let up on the accelerator pedal and press the brake pedal. Just before the vehicle stops, press the clutch pedal and the brake pedal, and shift to NEUTRAL.

NEUTRAL: Use this position when you start or idle your engine.

REVERSE (R): To back up, first press down the clutch pedal. Wait for the vehicle to stop moving and then, shift into REVERSE (R). Let up on the clutch pedal slowly while pressing the accelerator pedal.

Notice: **Shifting to REVERSE (R) while your vehicle is moving forward could damage the transmission. The repairs would not be covered by your warranty. Shift to REVERSE (R) only after your vehicle is stopped.**

Also, use REVERSE (R), along with the parking brake, when turning off your engine and parking your vehicle.

Six-Speed (VORTEC™ 8100 V8 and DURAMAX™ 6600 V8 Engines)

Here is how to operate your transmission.

This six-speed pattern is unique to GM manual transmissions. The transmission always repositions the shift lever to NEUTRAL, which is located between FOURTH (4) and FIFTH (5) gear.

To prevent unintentional gear selections, additional force is required to move the shift lever into REVERSE (R) or FIRST (1). Use FIRST (1) when trailer towing, driving with payload in the pickup box or launching on a grade. Otherwise, start in SECOND (2) gear. Only shift into FIRST (1) when the vehicle has stopped moving.

During the first 500 miles (805 km) of vehicle use, start the vehicle moving in FIRST (1) gear. This allows the clutch components to wear-in properly.

FIRST (1): With the vehicle at a stop, release the brake, press the clutch pedal and shift into FIRST (1). Then, slowly let up on the clutch pedal as you press the accelerator pedal. Only downshift into FIRST (1) when the vehicle has come to a complete stop. If the shift lever will not go into FIRST (1), put the lever in NEUTRAL and let up on the clutch pedal to fully engage the clutch. Press the clutch pedal again. Then, shift into FIRST (1).

SECOND (2): With the vehicle at a stop, release the brake, press the clutch pedal and shift into SECOND (2). Then, slowly let up on the clutch pedal as you press the accelerator pedal. With the vehicle moving, press the clutch pedal and upshift into SECOND (2) from FIRST (1) while applying light pressure to the right on the shifter. Then, slowly let up on the clutch pedal as you press the accelerator pedal. If you come to a complete stop and the shift lever will not go into SECOND (2), put the lever in NEUTRAL and let up on the clutch pedal to fully engage the clutch. Press the clutch pedal again. Then, shift into SECOND (2).

THIRD (3): Press the clutch pedal and upshift into THIRD (3). Then, slowly let up on the clutch pedal as you press the accelerator pedal.

FOURTH (4), FIFTH (5) and SIXTH (6): Upshift into the higher forward gears the same way as you do THIRD (3). Slowly let up on the clutch pedal as you press the accelerator pedal.

NEUTRAL: Use this position when you start or idle your engine.

REVERSE (R): To back up, press the clutch pedal. Wait for the vehicle to stop moving and then, shift to REVERSE (R). Let up on the clutch slowly while pressing the accelerator pedal. Also, use REVERSE (R), along with the parking brake, when turning off your engine and parking your vehicle.

Shift Speeds

⚠ CAUTION:

If you skip a gear when you downshift, you could lose control of your vehicle. You could injure yourself or others. Don't shift down more than one gear at a time when you downshift.

Do not allow the engine rpm to overspeed and enter the tachometer red lines. Engine overspeed occurs when downshifting, or descending a grade, at too high a vehicle speed. When going down steep grades, always select a gear at least one position lower than you would use on climbing a grade. This will allow the vehicle's engine to provide some braking and help to slow the vehicle as it goes down the grade. Monitor your vehicle speed, acceleration and engine rpm while applying the brakes as you go down the grade to ensure you have complete control over the vehicle.

If your engine speed drops below 600 rpm, or if the engine is not running smoothly, you should downshift to the next lower gear. When operating on slippery surfaces, downshift at lower than normal vehicle speeds to prevent the tires from slipping.

In bench seat equipped vehicles, move the tallest beverage containers to the right cupholder to provide additional clearance for the shift lever.

For vehicles equipped with a center console, the front cup holder pulls out and turns 180° to provide additional clearance between tall beverage containers and the shift lever.

Up-Shift Light

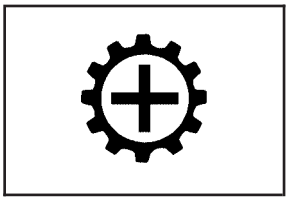

If you have a manual transmission, you may have a shift light. This light will show you when to shift to the next higher gear for best fuel economy.

When this light comes on, you can shift to the next higher gear if weather, road and traffic conditions allow. For the best fuel economy, accelerate slowly and shift when the light comes on.

While you accelerate, it is normal for the light to go on and off if you quickly change the position of the accelerator.

If your vehicle has four-wheel drive and is equipped with a manual transmission, disregard the SHIFT light when the transfer case is in 4-Wheel Low.

Ignore the SHIFT light when you downshift.

Four-Wheel Drive

If your vehicle has four-wheel drive, you can send your engine's driving power to all four wheels for extra traction. To get the most satisfaction out of four-wheel drive, you must be familiar with its operation. Read the part that follows before using four-wheel drive. See the appropriate text for the transfer case in your vehicle.

Notice: **Driving on clean, dry pavement in four-wheel drive for an extended period of time may cause premature wear on your vehicle's powertrain. Do not drive on clean, dry pavement in four-wheel drive on pavement for extended periods of time.**

Front Axle Locking Feature

The front axle locks and unlocks automatically when you shift the transfer case. Some delay for the axle to lock or unlock is normal.

Manual Transfer Case

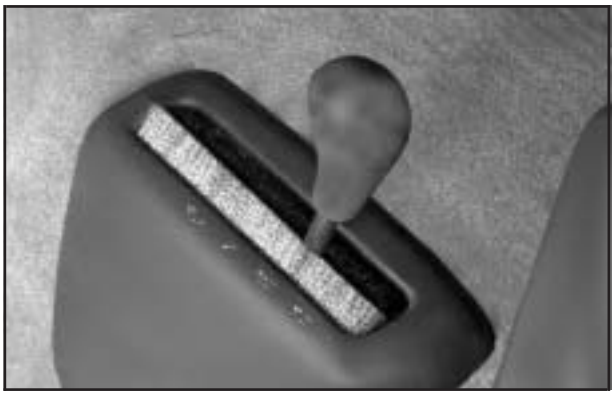

The transfer case shift lever is on the floor to the right of the driver. Use this lever to shift into and out of four-wheel drive.

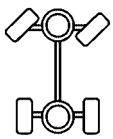

A 4WD indicator light will illuminate when you shift into four-wheel drive and the front axle engages. See *Four-Wheel-Drive Light on page 3-48*.

Some delay between shifting and the indicator's lighting is normal.

Recommended Transfer Case Settings

	Transfer Case Settings			
Driving Conditions	**2HI**	**4HI**	**4LO**	**N**
Normal	YES			
Severe		YES		
Extreme			YES	
Vehicle in Tow*				YES

*See *Recreational Vehicle Towing on page 4-62* or *Towing Your Vehicle on page 4-62* for further information.

An indicator light near the lever shows you the transfer case settings:

2-Wheel High (2HI): This setting is used for driving in most street and highway situations. Your front axle is not engaged in two-wheel drive. This setting also provides the best fuel economy.

4-Wheel High (4HI): Use 4HI when you need extra traction, such as on snowy or icy roads or in most off-road situations. This setting also engages your front axle to help drive your vehicle. This is the best setting to use when plowing snow.

⚠ CAUTION:

Shifting the transfer case to NEUTRAL can cause your vehicle to roll even if the transmission is in PARK (P), or if you have a manual transmission, even if you are in gear. You or someone else could be seriously injured. Be sure to set the parking brake before placing the transfer case in NEUTRAL. See *Parking Brake on page 2-48*.

NEUTRAL (N): Shift to this setting only when your vehicle needs to be towed. See *Recreational Vehicle Towing on page 4-62* or *Towing Your Vehicle on page 4-62*.

4-Wheel Low (4LO): This setting also engages your front axle and delivers extra torque. You may never need 4LO. It sends maximum power to all four wheels. You might choose 4LO if you are driving off-road in deep sand, deep mud, deep snow and climbing or descending steep hills. When operating in 4LO, the gear ratio is extra deep when compared to 4HI. The transmission gear shift feel will be exaggerated.

You can shift from 2-Wheel High (2HI) to 4-Wheel High (4HI) or from 4-Wheel High (4HI) to 2-Wheel High (2HI) while the vehicle is moving. Your front axle will engage faster if you take your foot off of the accelerator for a couple of seconds after you shift. In extremely cold weather, it may be necessary to stop or slow the vehicle to shift into 4-Wheel High (4HI).

When Using the Manual Transfer Case

- All shifts should be made using quick motions. Slow shifts may make it harder to shift.
- You may notice that it is harder to shift when the vehicle is cold. When the vehicle warms up the shifting will return to normal.
- While in 4-Wheel High (4HI) or 4-Wheel Low (4LO) you may experience reduced fuel economy.
- Avoid driving in 4-Wheel Drive on clean, dry pavement. It may cause your tires to wear faster, and make your transfer case harder to shift and run noisier.

Shifting from 2HI to 4HI

- Shifts between 2HI and 4HI can be made at any vehicle speed.
- It is easiest to shift the transfer case when maintaining a constant speed or a slight acceleration. If possible, avoid shifting while slowing down, as it will may make it harder to shift.
- Shift your transfer case lever in one continuous motion into either the 4HI or 2HI position.
- In extremely cold weather, it may be necessary to slow or stop the vehicle to shift into 4HI until your vehicle has warmed up.
- While in 4HI, your vehicle can be driven at any posted legal speed limit.

Shifting In or Out of 4LO

Notice: **Shifting the transfer case into 4LO while moving at speeds faster than 3 mph (5 km/h) may cause premature wear to the transfer case, and may cause the gears to grind. To avoid causing premature wear, and grinding the gears, do not shift the transfer case into 4LO while the vehicle is moving faster than 3 mph (5 km/h).**

Shifts into 4LO can be made with the vehicle at a stop, or while slowly rolling about 1 to 3 mph (2 to 5 km/h).

- Shift the automatic transmission into NEUTRAL (N), or with a manual transmission, press the clutch pedal, or shift into NEUTRAL.
- Shift the transfer case shift lever in one continuous motion into the 4LO position.
- When in 4LO do not drive faster than 45 mph. This will reduce wear and extend the life of your transfer case.

Shifting In or Out of NEUTRAL

1. With the vehicle running and the engine at an idle set the parking brake.
2. Place the transmission into NEUTRAL (N).

Shift the transfer case in one continuous motion into or out of the NEUTRAL (N) position.

Automatic Transfer Case

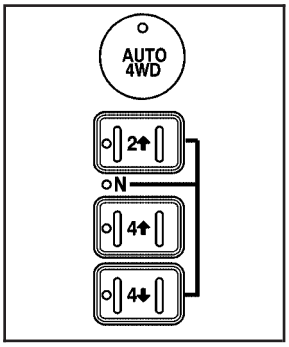

The transfer case buttons are located to the left of the instrument panel cluster.

Use these switches to shift into and out of four-wheel drive.

Recommended Transfer Case Settings

Driving Conditions	Transfer Case Settings				
	2HI	AUTO 4WD	4HI	4LO	N
Normal	YES				
Variable		YES			
Severe			YES		
Extreme				YES	
Vehicle in Tow*					YES
*See “Recreational Vehicle Towing” in the Index for further information.					

You can choose among four driving settings:

AUTO 4WD: This setting is ideal for use when road conditions are variable. When driving your vehicle in AUTO 4WD, the front axle is engaged, but the vehicle’s power is sent to the rear wheels. When the vehicle senses a loss of traction, the system will automatically engage four-wheel drive. Driving in this mode results in slightly lower fuel economy than 2HI.

(2HI): This setting is used for driving in most street and highway situations. Your front axle is not engaged in two-wheel drive. This setting also provides the best fuel economy.

(4HI): Use 4HI when you need extra traction, such a on snowy or icy roads or in most off-road situations. This setting also engages your front axle to help drive your vehicle. This is the best setting to use when plowing snow.

(4LO): This setting also engages your front axle and delivers extra torque. You may never need 4LO. It sends maximum power to all four wheels. You might choose 4LO if you are driving off-road in deep sand, deep mud, deep snow and climbing or descending steep hills. When operating in 4LO, the gear ratio is extra deep when compared to 4HI. The transmission gear shift feel will be exaggerated.

⚠ CAUTION:

Shifting the transfer case to NEUTRAL can cause your vehicle to roll even if the transmission is in PARK (P). You or someone else could be seriously injured. Be sure to set the parking brake before placing the transfer case in NEUTRAL. See *Parking Brake on page 2-48*.

NEUTRAL: Shift the vehicle's transfer case to NEUTRAL only when towing your vehicle. See *Recreational Vehicle Towing on page 4-62* or *Towing Your Vehicle on page 4-62* for more information.

Indicator lights in the switches show which setting your transfer case is in. The indicator lights will come on briefly when you turn on the ignition and one will stay on. If the lights do not come on, you should take your vehicle to your dealer for service. An indicator light will flash while the transfer case is being shifted. It will remain illuminated when the shift is complete. If for some reason the transfer case cannot make a requested shift, it will return to the last chosen setting.

If the SERVICE 4WD message stays on, you should take your vehicle to your dealer for service. See *DIC Warnings and Messages on page 3-54* for further information.

Shifting into 4HI or AUTO 4WD

Press and release the 4HI or AUTO 4WD switch. This can be done at any speed (except when shifting from 4LO), and the indicator light will flash while shifting. It will remain illuminated when the shift is completed.

Shifting into 2HI

Press and release the 2HI switch. This can be done at any speed (except when shifting from 4LO).

Shifting into 4LO

To shift to 4LO, the ignition must be in RUN and the vehicle must be stopped or moving less than 3 mph (4.8 km/h) with the transmission in NEUTRAL (N). The preferred method for shifting into 4LO is to have your vehicle moving 1 to 2 mph (1.6 to 3.2 km/h). Press and release the 4LO switch. You must wait for the 4LO indicator light to stop flashing and remain illuminated before shifting your transmission in gear.

Notice: **Shifting the transmission into gear before the 4LO indicator light has stopped flashing could damage the transfer case. To help avoid damaging your vehicle, always wait for the 4LO indicator light to stop flashing before shifting the transmission into gear.**

It is typical for your vehicle to exhibit significant engagement noise and bump when shifting between 4LO and 4HI ranges or from NEUTRAL with the engine running.

If the 4LO switch is pressed when your vehicle is in gear and/or moving, the 4LO indicator light will flash for 30 seconds and not complete the shift unless your vehicle is moving less than 3 mph (4.8 km/h) and the transmission is in NEUTRAL (N). After 30 seconds the transfer case will shift to 4HI mode.

Shifting Out of 4LO

To shift from 4LO to 4HI, AUTO 4WD or 2HI your vehicle must be stopped or moving less than 3 mph (4.8 km/h) with the transmission in NEUTRAL (N) and the ignition in RUN. The preferred method for shifting out of 4LO is to have your vehicle moving 1 to 2 mph (1.6 to 3.2 km/h). Press and release the 4HI, AUTO 4WD or 2HI switch. You must wait for the 4HI, AUTO 4WD or 2HI indicator light to stop flashing and remain illuminated before shifting your transmission into gear.

Notice: **Shifting the transmission into gear before the 4LO indicator light has stopped flashing could damage the transfer case. To help avoid damaging your vehicle, always wait for the 4LO indicator light to stop flashing before shifting the transmission into gear.**

It is typical for your vehicle to exhibit significant engagement noise and bump when shifting between 4LO and 4HI ranges or from NEUTRAL with the engine running.

If the 4HI, AUTO 4WD or 2HI switch is pressed when your vehicle is in gear and/or moving, the 4HI, AUTO 4WD or 2HI indicator light will flash for 30 seconds but will not complete the shift unless your vehicle is moving less than 3 mph (4.8 km/h) and the transmission is in NEUTRAL (N).

Shifting into NEUTRAL

To shift the transfer case to NEUTRAL do the following:

1. Start the vehicle or turn the ignition to RUN.
2. Put the transmission in NEUTRAL (N).
3. Shift the transfer case to 2HI.
4. Simultaneously press and hold the 2HI and 4LO buttons for 10 seconds. The red NEUTRAL light will come on when the transfer case shift to NEUTRAL is complete.

5. Shift the transmission to REVERSE (R) for one second, then shift the transmission to DRIVE (D) for one second, or FIRST (1) for vehicles equipped with a manual transmission.
6. Turn the ignition to LOCK.

Shifting Out of NEUTRAL

To shift out of NEUTRAL:

1. Shift the transmission to NEUTRAL (N) and turn the ignition to RUN with the engine off.
2. Press the button for the desired transfer case shift position (2HI, 4HI, AUTO 4WD or 4LO).
3. After the transfer case has shifted out of NEUTRAL the red light will go out.

Excessively shifting the transfer case into or out of the different modes may cause the transfer case to enter the shift protection mode. This will protect the transfer case from possible damage and will only allow the transfer case to respond to one shift per 10 seconds. The transfer case may stay in this mode for up to three minutes.

Electronic Transfer Case

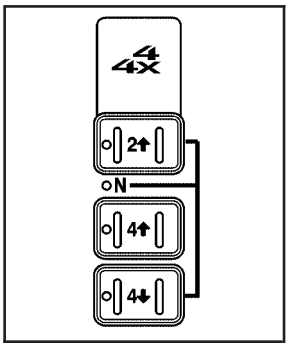

If your four-wheel-drive vehicle has the electronic transfer case, the transfer case switches are located to the left of the instrument panel cluster.

Use these switches to shift into and out of four-wheel drive.

You can choose among three driving settings:

Recommended Transfer Case Settings

Driving Conditions	Transfer Case Settings			
	2HI	4HI	4LO	N
Normal	YES			
Severe		YES		
Extreme			YES	
Vehicle in Tow*				YES
*See *Recreational Vehicle Towing on page 4-62* or *Towing Your Vehicle on page 4-62* for further information.				

(2HI): This setting is for driving in most street and highway situations. Your front axle is not engaged in two-wheel drive.

(4HI): This setting engages your front axle to help drive your vehicle. Use 4HI when you need extra traction, such as on snowy or icy roads, or in most off-road situations.

(4LO): This setting also engages your front axle to give you extra traction. You may never need 4LO. It sends the maximum power to all four wheels. You might choose 4LO if you were driving off-road in sand, mud or deep snow and climbing or descending steep hills.

When operating in 4LO, the gear ratio is extra deep when compared to 4HI. The transmission gear shift feel will be exaggerated.

Indicator lights in the switches show you which setting you are in. The indicator lights will come on briefly when you turn on the ignition and the last chosen setting will stay on. If the lights do not come on, you should take your vehicle in for service. An indicator light will flash while shifting. It will remain illuminated when the shift is completed. If for some reason the transfer cannot make a requested shift, it will return to the last chosen setting.

⚠ CAUTION:

Shifting the transfer case to NEUTRAL can cause your vehicle to roll even if the transmission is in PARK (P). You or someone else could be seriously injured. Be sure to set the parking brake before placing the transfer case in NEUTRAL. See *Parking Brake on page 2-48*.

NEUTRAL: Shift the vehicle's transfer case to NEUTRAL only when towing your vehicle. See *Recreational Vehicle Towing on page 4-62* or *Towing Your Vehicle on page 4-62* for more information.

Shifting from 2HI to 4HI

Press and release the 4HI switch. This can be done at any speed, and the front axle will lock automatically with some delay.

Shifting from 4HI to 2HI

Press and release the 2HI switch. This can be done at any speed, and the front axle will unlock automatically with some delay.

Shifting from 2HI or 4HI to 4LO

To shift from 2HI or 4HI to 4LO, the vehicle must be stopped or moving less than 3 mph (4.8 km/h) with the transmission in NEUTRAL (N). The preferred method for shifting into 4LO is to have your vehicle moving 1 to 2 mph (1.6 to 3.2 km/h). Press and release the 4LO switch. You must wait for the 4LO indicator light to stop flashing and remain illuminated before shifting your transmission into gear.

Notice: **Shifting the transmission into gear before the 4LO indicator light has stopped flashing could damage the transfer case. To help avoid damaging your vehicle, always wait for the 4LO indicator light to stop flashing before shifting the transmission into gear.**

If the 4LO switch is pressed when your vehicle is in gear and/or moving, the 4LO indicator light will flash for 30 seconds and not complete the shift unless your vehicle is moving slower than 3 mph (4.8 km/h) and the transmission is in NEUTRAL (N). The transfer case will shift to 4HI while waiting to complete the shift.

Shifting from 4LO to 4HI or 2HI

To shift from 4LO to 4HI or 2HI, your vehicle must be stopped or moving less than 3 mph (4.8 km/h) with the transmission in NEUTRAL (N). The preferred method for shifting out of 4LO is to have your vehicle moving 1 to 2 mph (1.6 to 3.2 km/h). Press and release the 4HI switch. You must wait for the 4HI indicator light to stop flashing and remain illuminated before shifting your transmission into gear.

If the 4HI switch is pressed when your vehicle is in gear and/or moving, the 4HI indicator light will flash for 30 seconds but will not complete the shift unless the vehicle is moving slower than 3 mph (4.8 km/h) and the transmission is in NEUTRAL (N).

Shifting into NEUTRAL

To shift the transfer case to NEUTRAL, first make sure the vehicle is parked so that it will not roll:

1. Start the vehicle or turn the ignition to RUN.
2. Put the transmission in NEUTRAL (N).
3. Shift the transfer case to 2HI.
4. Simultaneously press and hold the 2HI and 4LO buttons for 10 seconds. The red NEUTRAL light will come on when the transfer case shift to NEUTRAL is complete.
5. Shift the transmission to REVERSE (R) for one second, then shift the transmission to DRIVE (D) for one second, for FIRST (1) for vehicles equipped with a manual transmission.
6. Turn the ignition to LOCK.

Shifting Out of NEUTRAL

To shift out of NEUTRAL:

1. Shift the transmission to NEUTRAL (N) and turn the ignition to RUN with the engine off.
2. Press the button for the desired transfer case shift position (2HI, 4HI, or 4LO).
3. After the transfer case has shifted out of NEUTRAL the red light will go out.

Excessively shifting the transfer case into or out of the different modes may cause the transfer case to enter the shift protection mode. This will protect the transfer case from possible damage and will only allow the transfer case to respond to one shift per 10 seconds. The transfer case may stay in this mode for up to three minutes.

Parking Brake

To set the parking brake, hold the regular brake pedal down with your right foot. Push down the parking brake pedal with your left foot.

A chime will activate and the warning light will flash when the parking brake is applied and the vehicle is moving at least 3 mph (5 km/h) for at least three seconds.

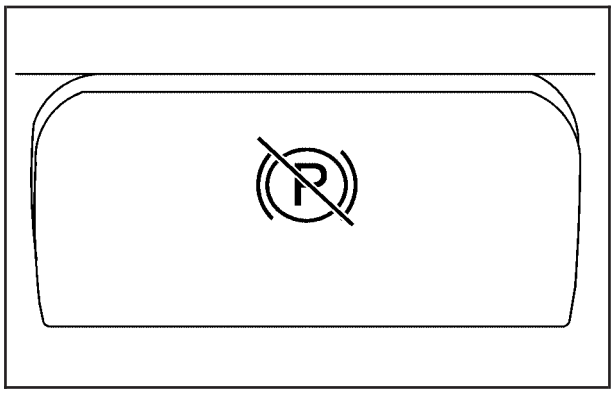

To release the parking brake, hold the regular brake pedal down. Pull the bottom edge of the lever, located above the parking brake pedal, with the parking brake symbol, to release the parking brake.

If the ignition is on when the parking brake is released, the brake system warning light will go off.

Notice: **Driving with the parking brake on can overheat the brake system and cause premature wear or damage to brake system parts. Verify that the parking brake is fully released and the brake warning light is off before driving.**

If you are towing a trailer and are parking on any hill, see *Towing a Trailer on page 4-68*.

Shifting Into Park (P) (Automatic Transmission)

⚠ CAUTION:

It can be dangerous to get out of your vehicle if the shift lever is not fully in PARK (P) with the parking brake firmly set. Your vehicle can roll. If you have left the engine running, the vehicle can move suddenly. You or others could be injured. To be sure your vehicle will not move, even when you are on fairly level ground, use the steps that follow. With four-wheel drive, if your transfer case is in NEUTRAL, your vehicle will be free to roll, even if your shift lever is in PARK (P). So, be sure the transfer case is in a drive gear — not in NEUTRAL. If you are pulling a trailer, see *Towing a Trailer on page 4-68*.

1. Hold the brake pedal down with your right foot and set the parking brake.
2. Move the shift lever into the PARK (P) position by pulling the shift lever toward you and moving it up as far as it will go.
3. If your vehicle has four-wheel drive, be sure the transfer case is in a drive gear – not in NEUTRAL (N).
4. Turn the ignition key to LOCK.
5. Remove the key and take it with you. If you can leave your vehicle with the ignition key in your hand, your vehicle is in PARK (P).

Leaving Your Vehicle With the Engine Running (Automatic Transmission)

⚠ CAUTION:

It can be dangerous to leave your vehicle with the engine running. Your vehicle could move suddenly if the shift lever is not fully in PARK (P) with the parking brake firmly set.

If you have four-wheel drive with a manual transfer case shift lever and your transfer case is in NEUTRAL, your vehicle will be free to roll, even if your shift lever is in PARK (P). So be sure the transfer case is in a drive gear — not in NEUTRAL.

And, if you leave the vehicle with the engine running, it could overheat and even catch fire. You or others could be injured. Do not leave your vehicle with the engine running unless you have to.

If you have to leave your vehicle with the engine running, be sure your vehicle is in PARK (P) and the parking brake is firmly set before you leave it. After you move the shift lever into PARK (P), hold the regular brake pedal down. Then, see if you can move the shift lever away from PARK (P) without first pulling it toward you. If you can, it means that the shift lever was not fully locked into PARK (P).

Torque Lock (Automatic Transmission)

If you are parking on a hill and you do not shift your transmission into PARK (P) properly, the weight of the vehicle may put too much force on the parking pawl in the transmission. You may find it difficult to pull the shift lever out of PARK (P). This is called “torque lock.” To prevent torque lock, set the parking brake and then shift into PARK (P) properly before you leave the driver’s seat. To find out how, see “Shifting Into PARK (P)” listed earlier in this section.

When you are ready to drive, move the shift lever out of PARK (P) before you release the parking brake.

If torque lock does occur, you may need to have another vehicle push yours a little uphill to take some of the pressure from the parking pawl in the transmission, so you can pull the shift lever out of PARK (P).

Shifting Out of Park (P) (Automatic Transmission)

Your vehicle has an automatic transmission shift lock control system which locks the shift lever in PARK (P) when the ignition is in the LOCK position. You have to fully apply your regular brakes before you can shift from PARK (P) when the ignition is in RUN. See *Automatic Transmission Operation on page 2-26*.

If your vehicle has an Allison Transmission®, the transmission is equipped with a park pawl designed to hold the higher weight of commercial medium duty trucks. Therefore, the Allison Transmission® uses larger parts than other automatic transmissions. These larger parts may sometimes make a clunk noise when the selector lever is moved from DRIVE (D) or REVERSE (R) to PARK (P). This is normal and there is no damage occurring during these shifts.

If you cannot shift out of PARK (P), ease pressure on the shift lever and push the shift lever all the way up into PARK (P) as you maintain brake application. Then, move the shift lever into the gear you want.

If you ever hold the brake pedal down but still can't shift out of PARK (P), try this:

1. Turn the key to ACCESSORY. There is no shift interlock in this key position.
2. Apply and hold the brake until the end of Step 4.
3. Shift the transmission to NEUTRAL (N).
4. Start the vehicle and then shift to the gear you want.
5. Have the system fixed as soon as you can.

Parking Your Vehicle (Manual Transmission)

⚠ CAUTION:

Shifting the transfer case to NEUTRAL can cause your vehicle to roll even if the manual transmission is in gear. Your or someone else could be seriously injured. Be sure to set the parking brake before placing the transfer case in NEUTRAL. See *Parking Brake on page 2-48* for more information.

Before you get out of your vehicle, move the shift lever into REVERSE (R), and firmly apply the parking brake. Once the shift lever has been placed into REVERSE (R) with the clutch pedal pressed in, you can turn the ignition key to LOCK, press the key release button, remove the key and release the clutch.

If you are parking on a hill, or if you are pulling a trailer, see *Towing a Trailer on page 4-68*.

Parking Over Things That Burn

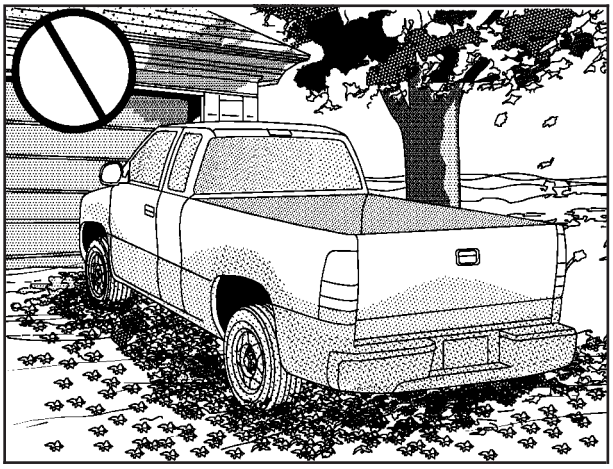

⚠ CAUTION:

Things that can burn could touch hot exhaust parts under your vehicle and ignite. Do not park over papers, leaves, dry grass or other things that can burn.

Engine Exhaust

⚠ CAUTION:

Engine exhaust can kill. It contains the gas carbon monoxide (CO), which you cannot see or smell. It can cause unconsciousness and death.

You might have exhaust coming in if:

- **Your exhaust system sounds strange or different.**
- **Your vehicle gets rusty underneath.**
- **Your vehicle was damaged in a collision.**

CAUTION: (Continued)

CAUTION: (Continued)

- **Your vehicle was damaged when driving over high points on the road or over road debris.**
- **Repairs were not done correctly.**
- **Your vehicle or exhaust system had been modified improperly.**

If you ever suspect exhaust is coming into your vehicle:

- **Drive it only with all the windows down to blow out any CO; and**
- **Have your vehicle fixed immediately.**

Running Your Engine While You Are Parked

It is better not to park with the engine running. But if you ever have to, here are some things to know.

⚠ CAUTION:

Idling the engine with the climate control system off could allow dangerous exhaust into your vehicle. See the earlier caution under *Engine Exhaust on page 2-53*.

Also, idling in a closed-in place can let deadly carbon monoxide (CO) into your vehicle even if the climate control fan is at the highest setting. One place this can happen is a garage. Exhaust — with CO — can come in easily. NEVER park in a garage with the engine running.

Another closed-in place can be a blizzard. See *Winter Driving on page 4-44*.

⚠ CAUTION:

It can be dangerous to get out of your vehicle if the automatic transmission shift lever is not fully in PARK (P) with the parking brake firmly set. Your vehicle can roll. Do not leave your vehicle when the engine is running unless you have to. If you have left the engine running, the vehicle can move suddenly. You or others could be injured. To be sure your vehicle will not move, even when you are on fairly level ground, always set your parking brake and move the automatic transmission shift lever to PARK (P), or the manual transmission shift lever to NEUTRAL.

⚠ CAUTION:

Four-wheel drive vehicles with the transfer case in NEUTRAL will allow the vehicle to roll, even if your automatic transmission shift lever is in PARK (P). So, be sure the transfer case is in a drive gear — not in NEUTRAL. Always set your parking brake.

Follow the proper steps to be sure your vehicle will not move. See *Shifting Into Park (P) (Automatic Transmission) on page 2-49*.

If you are pulling a trailer, see *Towing a Trailer on page 4-68*.

Mirrors

Manual Rearview Mirror

Pull or push the tab under the mirror to adust it to the night or daytime setting. In the nightime setting, the glare from headlamps behind the vehicle will be less intense.

Automatic Dimming Rearview Mirror with OnStar®, Compass and Temperature Display

Your vehicle may have this feature. When on, an automatic dimming mirror automatically dims to the proper level to minimize glare from lights behind you after dark.

The mirror also includes a dual display in the upper right corner of the mirror face. The compass reading and the outside temperature will both appear in the display at the same time.

⏻ **(On/Off):** This is the on/off button.

Temperature and Compass Display

Press the on/off button, located to the far left, briefly to turn the compass/temperature display on or off.

If the display reads CAL, you will need to calibrate the compass. For more information on calibration, see below.

To adjust between Fahrenheit and Celsius do the following:

1. Press and hold the on/off button for approximately four seconds until either a flashing F or C appears.
2. Press the button again to change the display to the desired unit of measurement. After approximately four seconds of inactivity, the new unit will be locked in and the compass/temperature display will return.

If an abnormal temperature reading is displayed for an extended period of time, please consult your dealer. Under certain circumstances, a delay in updating the temperature is normal.

Automatic Dimming Mirror Operation

The automatic dimming mirror function is turned on automatically each time the ignition is started. To operate the automatic dimming mirror, do the following:

1. Make sure the green indicator light, located to the left of the on/off button, is lit. If it's not, press and hold the on/off button for approximately six seconds until the green light comes on, indicating that the mirror is in automatic dimming mode.
2. Turn off the automatic dimming mirror function by pressing and holding the on/off button for approximately six seconds, until the green indicator light turns off.

Compass Variance

The mirror is set in zone eight upon leaving the factory. It will be necessary to adjust the compass to compensate for compass variance if you live outside of zone eight. Under certain circumstances, as during a long distance cross-country trip, it will be necessary to adjust for compass variance. Compass variance is the difference between earth's magnetic north and true geographic north. If not adjusted to account for compass variance, your compass could give false readings.

To adjust for compass variance do the following:

1. Find your current location and variance zone number on the following zone map.

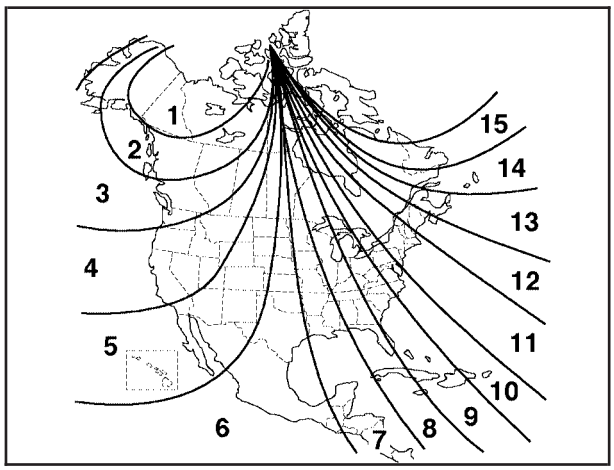

2. Press and hold the on/off button until a Z and a zone number appear in the display. The compass is now in zone mode.
3. Keep pressing the on/off button until the desired zone number appears in the display. Release the button. After approximately four seconds of inactivity, the new zone number will be locked in and the compass/temperature display will return.
4. Calibrate the compass as described below.

Compass Calibration

The compass may need calibration if one of the following occurs:

- After approximately five seconds, the display does not show a compass heading (N for North, for example), there may be a strong magnetic field interfering with the compass. Such interference may be caused by a magnetic antenna mount, magnetic note pad holder or a similar magnetic item.
- The compass does not display the correct heading and the compass zone variance is set correctly.

In order to calibrate, CAL must be displayed in the mirror compass windows. If CAL is not displayed, push the on/off button for approximately 12 seconds or until CAL is displayed.

The compass can be calibrated by driving the vehicle in circles at 5 mph (8 km/h) or less until the display reads a direction.

Passenger Airbag Indicator

The vehicle may be equipped with a passenger airbag indicator, on the mirror glass, just above the buttons. If the vehicle has this feature, the mirror will display the word ON, or an airbag symbol in Canada, when the passenger airbag is enabled. For more information, see *Passenger Sensing System on page 1-76*.

Cleaning the Mirror

When cleaning the mirror, use a paper towel or similar material dampened with glass cleaner. Do not spray glass cleaner directly on the mirror as that may cause the liquid cleaner to enter the mirror housing.

Automatic Dimming Rearview Mirror with Compass and Temperature Display

If the vehicle is equipped with an automatic mirror, it will, when on, automatically dim to the proper level to minimize glare from lights behind you after dark.

The mirror also includes a display in the upper right corner of the mirror face. The compass reading and the outside temperature will both appear in the display at the same time. The dual display can be turned on or off by briefly pressing either the TEMP or the COMP button.

Temperature Display

The temperature can be displayed by pressing the TEMP button. Pressing the TEMP button once briefly, will toggle the temperature reading on and off. To alternate the temperature reading between Fahrenheit and Celsius, press and hold the TEMP button for approximately four seconds until the display blinks F and C. Press and release the TEMP button to toggle between the Fahrenheit and Celsius readings. After approximately four seconds of inactivity, the display will stop blinking and display the last selection made.

If an abnormal reading is displayed, for an extended period of time, please consult your dealer. Under certain circumstances, a delay in updating the temperature is normal.

Automatic Dimming Mirror Operation

The time period you need to press and hold the TEMP button to turn the automatic dimming feature on or off is approximately eight seconds. The indicator light to the left of the TEMP button will still turn on or off to show you when the automatic dimming feature is activated. Once the mirror is turned off, it will remain off until it is turned back on, or until the vehicle is restarted.

Compass Operation

Press the COMP button once briefly to turn the compass on or off.

When the ignition and the compass feature are on, the compass will show two character boxes for approximately two seconds. After two seconds, the mirror will display the compass heading.

Compass Calibration

The compass may need calibration if one of the following occurs:

- If CAL is displayed while driving in the vehicle.
- After approximately five seconds, the display does not show a compass heading (N for North, for example), there may be a strong magnetic field interfering with the compass. Such interference may be caused by a magnetic antenna mount, magnetic note pad holder or a similar magnetic item.
- The compass does not display the correct heading and the compass zone variance is set correctly.

In order to calibrate, CAL must be displayed in the mirror compass windows. If CAL is not displayed, push in the COMP button for approximately eight seconds or until CAL is displayed.

The compass can be calibrated by driving the vehicle in circles at 5 mph (8 km/h) or less until the display reads a direction.

Compass Variance

The mirror is set in zone eight upon leaving the factory. It will be necessary to adjust the compass to compensate for compass variance if you live outside zone eight. Under certain circumstances, as during a long distance cross-country trip, it will be necessary to adjust for compass variance. Compass variance is the difference between earth's magnetic north and true geographic north. If not adjusted to account for compass variance, your compass could give false readings.

To adjust for compass variance:

1. Find your current location and variance zone number on the following zone map.
2. Press and hold the COMP button for five seconds until a zone number appears in the display.

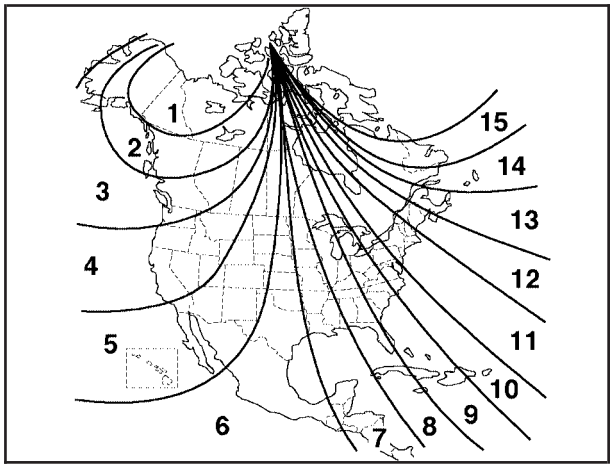

3. Press the COMP button on the bottom of the mirror until the new zone number appears in the display. After you stop pressing the button, the display will show a compass direction within a few seconds.

Passenger Air Bag Indicator

The mirror may be equipped with a passenger airbag indicator on the mirror glass, just above the buttons. If the vehicle has this feature the mirror will display the word ON, or an airbag symbol in Canada, when the passenger airbag is enabled. For more information see *Passenger Sensing System on page 1-76*

Cleaning the Mirror

When cleaning the mirror, use a paper towel or similar material dampened with glass cleaner. Do not spray glass cleaner directly on the mirror as that may cause the liquid cleaner to enter the mirror housing.

Outside Manual Mirrors

Adjust your outside mirrors so you can just see the side of your vehicle and have a clear view of objects behind you. The mirrors can be folded in to enter narrow areas.

The use of hood-mounted air deflectors and add-on convex mirror attachments may adversely affect mirror performance.

Outside Camper-Type Mirrors

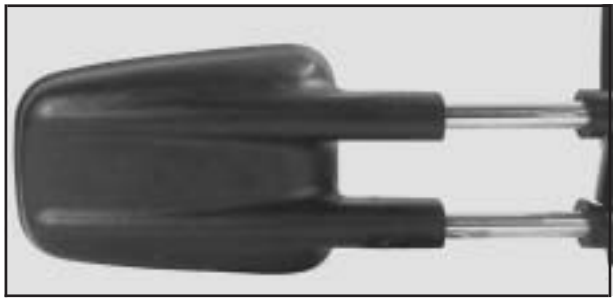

If your vehicle is equipped with camper-type mirrors, they can be adjusted so you can have a clear view of the objects behind you.

Pull out the mirror head to extend it for better visibility when towing a trailer.

Outside West Coast-Type Mirrors

If your vehicle is equipped with the west coast-type mirrors, they can be adjusted so you can have a clear view of objects behind you.

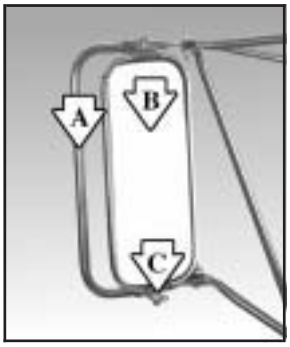

A. Outer Mirror Frame
B. Mirror Head
C. Nut

The mirrors can be adjusted by turning the mirror head (B) and moving the outer mirror frame (A) backward or forward. You can also loosen the nut (C) on the top and bottom of the outer mirror frame to tilt the mirror head.

Outside Power Mirrors

If your vehicle is equipped with power outside mirrors, the controls are located on the driver's door armrest.

Move the selector switch located above the control pad to the left or right to choose the mirror you want to adjust, then press the dots located on the four-way control pad to adjust the mirror.

Outside Power Camper-Type Mirror

If your vehicle is equipped with outside power camper-type mirrors, they can be adjusted so you can have a clear view of objects behind you.

To extend the mirrors move the selector switch, located above the mirror control, to the middle position. The mirror control will illuminate. Press the left side of the mirror control to slide the mirror heads away from the body of the vehicle. Press the right side of the mirror control to slide the mirror heads toward the body of the vehicle.

Outside Power Foldaway Mirrors

If your vehicle is equipped with this feature, the controls are located on the driver's door armrest.

Move the upper selector switch to the left or right to choose the mirror you want to adjust; then press the dots located on the four-way control pad to adjust the mirror.

The mirrors may also include a memory function which works together with the memory seats. See “Memory Seats” under *Memory Seat on page 2-74* for more information.

To fold or unfold the mirrors, move the selector switch, located above the mirror control, to the middle position. The mirror control will illuminate. Press the right or left side of the mirror control to fold or unfold the mirrors. You may notice the mirror glass adjust as the mirrors fold in; this is normal. The mirror glass will reposition itself once the mirrors are unfolded.

If the mirrors are accidentally folded/unfolded manually, they may shake or flutter at normal driving speeds and may not stay in the unfolded position. If this happens, you will need to reset the mirrors. See “Resetting the Power Foldaway Mirrors” next.

Resetting the Power Foldaway Mirrors

You will need to reset the power foldaway mirrors if the following occurs:

- They are accidentally manually folded/unfolded.
- The mirrors will not stay in the unfolded position.
- The mirrors shake and flutter at normal driving speeds.

To reset the power foldaway mirrors, fold and unfold them at least three times using the mirror controls. This will reset them to their normal position.

Outside Automatic Dimming Mirror

If your vehicle is equipped with this feature, the driver’s outside mirror will adjust for the glare of headlamps behind you. This feature is controlled by the on and off settings found on the electrochromic mirror. See *Automatic Dimming Rearview Mirror with Compass and Temperature Display on page 2-58*.

Outside Curb View Assist Mirrors

If the vehicle has the memory package, the outside mirrors are able to perform the curb view assist mirror function. This feature will cause the passenger’s and/or driver’s mirror to tilt to a preselected position when the vehicle is in REVERSE (R). This feature may be useful in allowing the driver to view the curb when parallel parking. When the vehicle is shifted out of REVERSE (R) and a short delay has occurred, the passenger’s and/or driver’s mirror will return to its original position.

To change the preselected tilt position, adjust the mirrors to the desired position while the vehicle is in REVERSE (R). When the vehicle is shifted out of REVERSE (R), this new position is saved in memory as the tilt position.

This feature can be turned on or off through the Driver Information Center (DIC).

Outside Convex Mirror

Your passenger's side mirror is convex. A convex mirror's surface is curved so you can see more from the driver's seat.

⚠ CAUTION:

A convex mirror can make things (like other vehicles) look farther away than they really are. If you cut too sharply into the right lane, you could hit a vehicle on your right. Check your inside mirror or glance over your shoulder before changing lanes.

Outside Heated Mirrors

The vehicle may have outside heated mirrors which helps clear them of condensation, snow, and ice. There is a heated mirror symbol on the driver's side mirror that indicates the feature.

When the rear window defogger button is pressed, the heated mirrors are turned on. See "Rear Window Defogger" under *Dual Automatic Climate Control System on page 3-25* for further information.

OnStar® System

OnStar® uses global positioning system (GPS) satellite technology, wireless communications, and state of the art call centers to provide you with a wide range of safety, security, information, and convenience services.

A complete OnStar® user's guide and the terms and conditions of the OnStar® Subscription Service Agreement are included in the OnStar®-equipped vehicle's glove box literature. For more information, visit www.onstar.com or www.onstarcanada.com. Contact OnStar® at 1-888-4-ONSTAR (1-888-466-7827), or press the OnStar® button to speak to an OnStar® advisor 24 hours a day, 7 days a week.

Terms and conditions of the Subscription Service Agreement can be found at www.onstar.com or www.onstarcanada.com.

OnStar® Services

For new vehicles equipped with OnStar®, the Safe and Sound Plan is included for the first year. You can extend this plan beyond the first year, or upgrade to the Directions and Connections Plan to meet your needs. For more information, press the OnStar® button to speak with an advisor.

Safe and Sound Plan

- Automatic Notification of Airbag Deployment
- Emergency Services
- Roadside Assistance
- Stolen Vehicle Tracking
- AccidentAssist
- Remote Door Unlock/Vehicle Alert
- Remote Diagnostics
- Online Concierge

Directions and Connections Plan

- All Safe and Sound Plan Services
- Driving Directions
- RideAssist
- Information and Convenience Services

OnStar® Personal Calling

As an OnStar® subscriber, the Personal Calling capability is a hands-free wireless phone that is integrated into the vehicle. Calls can be made nationwide using simple voice commands with no additional contracts and no additional roaming charges. To find out more about OnStar® Personal Calling, refer to the OnStar® user's guide in the vehicle's glove box, visit www.onstar.com or www.onstarcanada.com; or speak with an OnStar® advisor by pressing the OnStar® button or calling 1-888-4-ONSTAR (1-888-466-7827).

OnStar® Virtual Advisor

Virtual Advisor is a feature of OnStar® Personal Calling that uses minutes to access up-to-date weather and traffic reports for your area, news and sports updates, stock quotes, entertainment, and more. You are also able to listen and reply to E-mail through the vehicle's audio system. Customize your information profile at www.myonstar.com. See the OnStar® user's guide for more information.

OnStar® Steering Wheel Controls

A steering wheel control can be used to interact with the OnStar® personal calling feature.

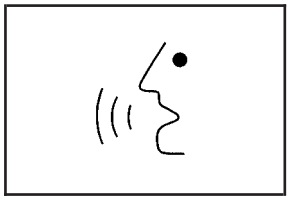

Press the control with this symbol on the steering wheel to make a phone call.

When calling into voice mail systems, or to dial directory numbers, press the control, say the number(s), then say “dial”.

See the OnStar® user’s guide for more information.

HomeLink® Transmitter

HomeLink® a combined universal transmitter and receiver, provides a way to replace up to three hand-held transmitters used to activate devices such as gate operators, garage door openers, entry door locks, security systems and home lighting. Additional HomeLink® information can be found on the internet at www.homelink.com or by calling 1-800-355-3515.

If your vehicle is equipped with the HomeLink® Transmitter, it complies with Part 15 of the FCC Rules. Operation is subject to the following two conditions:
(1) this device may not cause harmful interference, and
(2) this device must accept any interference received, including interference that may cause undesired operation.

This device complies with RSS-210 of Industry Canada. Operation is subject to the following two conditions: (1) this device may not cause interference, and (2) this device must accept any interference, including interference that may cause undesired operation of the device.

Changes and modifications to this system by other than an authorized service facility could void authorization to use this equipment.

Programming the HomeLink® Transmitter

Do not use the HomeLink® Transmitter with any garage door opener that does not have the “stop and reverse” feature. This includes any garage door opener model manufactured before April 1, 1982. If you have a newer garage door opener with rolling codes, please be sure to follow Steps 6 through 8 to complete the programming of your HomeLink® Transmitter.

Read the instructions completely before attempting to program the HomeLink® Transmitter. Because of the steps involved, it may be helpful to have another person available to assist you in programming the transmitter.

Keep the original transmitter for use in other vehicles as well as for future HomeLink® programming. It is also recommended that upon the sale of the vehicle, the programmed HomeLink® buttons should be erased for security purposes. Refer to “Erasing HomeLink® Buttons” or, for assistance, contact HomeLink® on the internet at: www.homelink.com or by calling 1-800-355-3515.

Be sure that people and objects are clear of the garage door or gate operator you are programming. When programming a garage door, it is advised to park outside of the garage.

It is recommended that a new battery be installed in your hand-held transmitter for quicker and more accurate transmission of the radio frequency.

Programming HomeLink®

Your vehicle’s engine should be turned off while programming the transmitter. Follow these steps to program up to three channels:

1. Press and hold down the two outside buttons, releasing only when the indicator light begins to flash, after 20 seconds. Do not hold down the buttons for longer than 30 seconds and do not repeat this step to program a second and/or third transmitter to the remaining two HomeLink® buttons.

2. Position the end of your hand-held transmitter about 1 to 3 inches (3 to 8 cm) away from the HomeLink® buttons while keeping the indicator light in view.
3. Simultaneously press and hold both the desired button on HomeLink® and the hand-held transmitter button. Do not release the buttons until Step 4 has been completed.

   Some entry gates and garage door openers may require you to substitute Step 3 with the procedure noted in “Gate Operator and Canadian Programming” later in this section.
4. The indicator light will flash slowly at first and then rapidly after HomeLink® successfully receives the frequency signal from the hand-held transmitter. Release both buttons.
5. Press and hold the newly-trained HomeLink® button and observe the indicator light.

   If the indicator light stays on constantly, programming is complete and your device should activate when the HomeLink® button is pressed and released.

   To program the remaining two HomeLink® buttons, begin with Step 2 under “Programming HomeLink®.” Do not repeat Step 1 as this will erase all of the programmed channels.

   If the indicator light blinks rapidly for two seconds and then turns to a constant light, continue with Steps 6 through 8 following to complete the programming of a rolling-code equipped device (most commonly, a garage door opener).
6. Locate in the garage, the garage door opener receiver (motor-head unit). Locate the “Learn” or “Smart” button. This can usually be found where the hanging antenna wire is attached to the motor-head unit.
7. Firmly press and release the “Learn” or “Smart” button. The name and color of the button may vary by manufacturer.

   You will have 30 seconds to start Step 8.
8. Return to the vehicle. Firmly press and hold the programmed HomeLink® button for two seconds, then release. Repeat the press/hold/release sequence a second time, and depending on the brand of the garage door opener (or other rolling code device), repeat this sequence a third time to complete the programming.

   HomeLink® should now activate your rolling-code equipped device.

To program the remaining two HomeLink® buttons, begin with Step 2 of “Programming HomeLink®.” You do not want to repeat Step 1, as this will erase all previous programming.

Gate Operator and Canadian Programming

Canadian radio-frequency laws require transmitter signals to “time out” or quit after several seconds of transmission. This may not be long enough for HomeLink® to pick up the signal during programming. Similarly, some U.S. gate operators are manufactured to “time out” in the same manner.

If you live in Canada, or you are having difficulty programming a gate operator by using the “Programming HomeLink®” procedures (regardless of where you live), replace Step 3 under “Programming HomeLink®” with the following:

Continue to press and hold the HomeLink® button while you press and release every two seconds (cycle) your hand-held transmitter until the frequency signal has been successfully accepted by HomeLink®. The indicator light will flash slowly at first and then rapidly. Proceed with Step 4 under “Programming HomeLink®” to complete.

Using HomeLink®

Press and hold the appropriate HomeLink® button for at least half of a second. The indicator light will come on while the signal is being transmitted.

Erasing HomeLink® Buttons

To erase programming from the three buttons do the following:

1. Press and hold down the two outside buttons until the indicator light begins to flash, after 20 seconds. Do not hold the two outside buttons for longer than 30 seconds.
2. Release both buttons.

HomeLink® is now in the train (learning) mode and can be programmed at any time beginning with Step 2 under “Programming HomeLink®” shown earlier in this section.

Individual buttons cannot be erased, but they can be reprogrammed. See “Reprogramming a Single HomeLink® Button” following this section.

Reprogramming a Single HomeLink® Button

To program a device to HomeLink® using a HomeLink® button previously trained, follow these steps:

1. Press and hold the desired HomeLink® button. Do not release the button.
2. The indicator light will begin to flash after 20 seconds. While still holding the HomeLink® button, proceed with Step 2 under “Programming HomeLink®” shown earlier in this section.

Resetting Defaults

To reset HomeLink® to default settings do the following:

1. Hold down the two outside buttons for about 20 seconds until the indicator light begins to flash.
2. Continue to hold both buttons until the HomeLink® indicator light turns off.
3. Release both buttons.

For questions or comments, contact HomeLink® at 1-800-355-3515, or on the internet at www.homelink.com.

Storage Areas

Glove Box

Open the glove box by pulling the bottom of the handle upward.

Cupholder(s)

Your vehicle may have cupholders located in the front console, or in the fold-down armrest.

Coinholder(s)

Your vehicle may have a coin holder inside the center console storage area.

Front Storage Area

Your vehicle may have a center armrest storage compartment in the front bench seat.

To open it, fold down the armrest and press the latch handle located at the front of the armrest. Then, let the lid pop up and swing open.

The storage compartment may have a cassette/compact disc holder.

Center Console Storage Area

Your vehicle may be equipped with a console compartment between the bucket seats.

To open it, press the button located on the right side of the front of the lid and swing the lid open.

Your vehicle may have a compact disc holder in the console.

Your console may have a cupholder that swings down for the rear seat passengers to use. The front cupholder pulls out and swivels 180° to provide clearance between tall beverage containers and the manual transmission shift lever (if equipped).

Tonneau Cover

If your vehicle is equipped with a tonneau cover, follow the directions below to remove the cover.

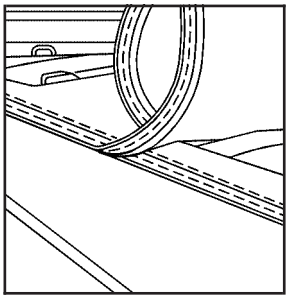

1. To remove, unsnap the cover. Roll it up and stow it using the buckle and the strap located at the front of the box.

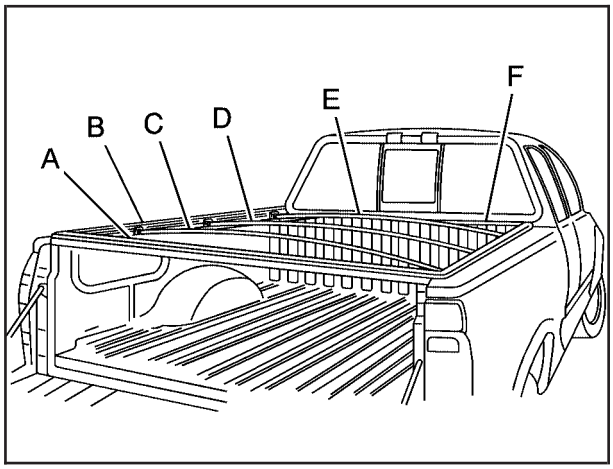

A. Back rail
B. Side rail
C. Rear bow
D. Center bow
E. Front bow
F. Front rail

2. Remove the tonneau cover from the notch in the front rail on the driver's side of the vehicle.

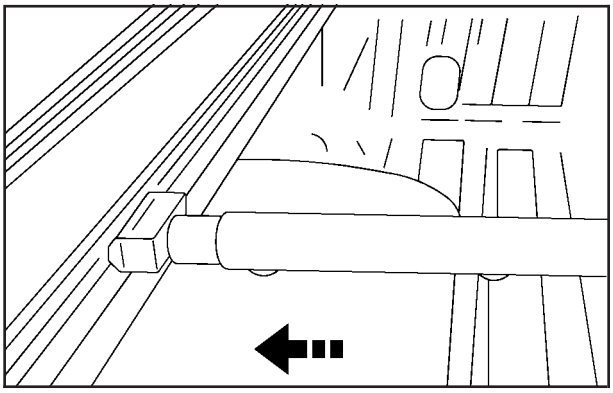

3. Remove the three bows by gently pushing them against the spring-loaded end. The three bows are labeled front, center, rear to remind you of the order in which to reinstall them.

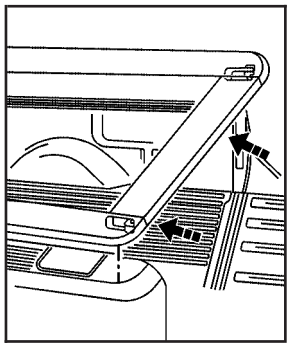

4. To add cargo to the box, remove all bows and the back rail and stow them safely.

To clean the tonneau cover, use mild soap and water. If necessary, use a soft bristle brush to remove dirt trapped in the grain of the material.

Sunroof

The vehicle may be equipped with a power sliding sunroof. To open or close your sunroof, the ignition must be on or Retained Accessory Power (RAP) must be active. See *Retained Accessory Power (RAP) on page 2-23* for more information.

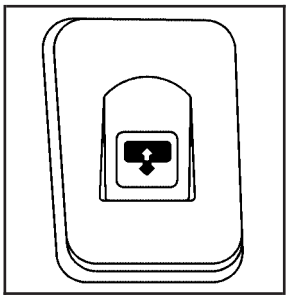

Press the rear side of the sunroof control, located on the overhead console, to open the sunroof.

To close the sunroof, press and hold the front of the control. The control must be held until the glass stops moving, so that the sunroof will be fully seated. With the sunroof closed, press the rear of the control to open the sunroof to the vent position.

The sunroof is also has a roller sunscreen that can be used to block the rays of the sun. The roller sunscreen can be manually operated with the sunroof in an open or close position. To open the sunscreen, press up to unlatch it and roll it back. To close, pull it forward and latch it to the close position.

Do not leave the sunroof open for long periods of time as debris can collect in the tracks.

Vehicle Personalization

Memory Seat

If your vehicle has this feature, the controls for the memory function are located on the driver's door.

These buttons are used to program and recall memory settings for the driver's seat and both the driver's and passenger's outside mirrors. The settings for these features can be saved for up to two drivers.

To store the memory settings, do the following:

1. If you have an automatic transmission, place the vehicle in PARK (P).

   If you have a manual transmission, set the parking brake.
2. Adjust the driver's seat, including the seatback recliner, lumbar, and side wing area, and both outside mirrors to your preference.
3. Press and hold the 1 or 2 button of the memory control for three seconds. A double chime will sound to let you know that the position has been stored.

To repeat the procedure for a second driver, follow the preceding steps, but press the other numbered memory control button.

To recall a memory position, do one of the following:

- If you have an automatic transmission, press and release the desired button 1 or 2 while the vehicle is in PARK (P). A single chime will sound and the memory position will be recalled.

  If the vehicle is not in PARK (P), the memory position will not be recalled.
- If you have a manual transmission, press and release the desired button 1 or 2 while the parking brake is set. A single chime will sound and the memory position will be recalled.

  If the parking brake is not set, the memory position will not be recalled.

To stop recall movement of the memory seat feature at any time, press one of the memory buttons or power seat controls.

Easy Exit Seat

The controls for this memory function are located on the driver's door.

(Easy Exit Seat): This button is used to program and recall the desired driver's seat position when exiting/entering the vehicle. The seat position can be saved for up to two drivers.

To store the seat exit position, do the following:

1. If you have an automatic transmission, place the vehicle in PARK (P).

   If you have a manual transmission, set the parking brake.
2. Press and release the 1 or 2 button. The seat will move to the stored memory position.
3. Adjust the seat to the desired exit position.
4. Press and hold the exit button of the memory control for three seconds. A double chime will sound to let you know that the position has been stored for the selected button 1 or 2.

   To repeat the procedure for a second driver, follow the preceding steps, but press the other numbered memory control button.

To use the seat exit position, do one of the following:

- If you have an automatic transmission, press and release the exit button on the memory control while the vehicle is in PARK (P).
- If you have a manual transmission, press and release the exit button on the memory control while the parking brake is set.
- Or, if this feature is activated in the DIC, removing the key from the ignition will move the seat to the exit position.

See "Easy Exit Seat" under *DIC Vehicle Customization on page 3-63* for more information on activating this feature in the DIC.

✍ NOTES

Section 3 Instrument Panel

Instrument Panel Overview 3-4
Hazard Warning Flashers 3-6
Other Warning Devices 3-6
Horn 3-6
Tilt Wheel 3-7
Turn Signal/Multifunction Lever 3-7
Turn and Lane-Change Signals 3-8
Headlamp High/Low-Beam Changer 3-9
Flash-to-Pass 3-9
Windshield Wipers 3-9
Windshield Washer 3-10
Cruise Control 3-10
Headlamps 3-13
Headlamps on Reminder 3-14
Daytime Running Lamps (DRL) 3-14
Automatic Headlamp System 3-15
Fog Lamps 3-16
Auxiliary Roof Mounted Lamp 3-17
Instrument Panel Brightness 3-17
Dome Lamps 3-17
Dome Lamp Override 3-18
Entry Lighting 3-18
Exit Lighting 3-18
Front Reading Lamps 3-18
Cargo Lamp 3-19
Accessory Power Outlets 3-19
Ashtrays and Cigarette Lighter 3-20

Climate Controls 3-21
Climate Control System 3-21
Dual Climate Control System 3-22
Dual Automatic Climate Control System 3-25
Outlet Adjustment 3-30

Warning Lights, Gages, and Indicators 3-31
Instrument Panel Cluster 3-32
Speedometer and Odometer 3-33
Trip Odometer 3-33
Tachometer 3-33
Safety Belt Reminder Light 3-33
Airbag Readiness Light 3-34
Airbag Off Light 3-34
Passenger Airbag Status Indicator 3-36
Battery Warning Light 3-38
Voltmeter Gage 3-38
Up-Shift Light (Manual Transmission) 3-39
Brake System Warning Light 3-39
Anti-Lock Brake System Warning Light 3-41
Traction Off Light 3-41
Engine Coolant Temperature Gage 3-42
Transmission Temperature Gage 3-43
Malfunction Indicator Lamp 3-44
Oil Pressure Gage 3-47
Security Light 3-48
Cruise Control Light 3-48
Highbeam On Light 3-48

Section 3 Instrument Panel

Four-Wheel-Drive Light 3-48
Tow/Haul Mode Light 3-49
Overdrive Disable (Allison Transmission® Only) ...3-49
Fuel Gage 3-49
Low Fuel Warning Light 3-50

Driver Information Center (DIC) 3-50
DIC Operation and Displays 3-51
DIC Warnings and Messages 3-54
DIC Vehicle Customization 3-63

Audio System(s) 3-69
Setting the Time for Radios without Radio Data Systems (RDS) 3-69
Setting the Time for Radios with Radio Data Systems (RDS) 3-70
AM-FM Radio 3-70
Radio with CD 3-73
Radio with Cassette and CD 3-83
Radio with Six-Disc CD 3-98
Rear Seat Entertainment System 3-111
Rear Seat Audio (RSA) 3-122
Theft-Deterrent Feature 3-123
Audio Steering Wheel Controls 3-124
Radio Reception 3-125
Care of Your Cassette Tape Player 3-125
Care of Your CDs and DVDs 3-126
Care of Your CD and DVD Player 3-126
Fixed Mast Antenna 3-127
XM™ Satellite Radio Antenna System 3-127
Chime Level Adjustment 3-127

✍ NOTES

Instrument Panel Overview

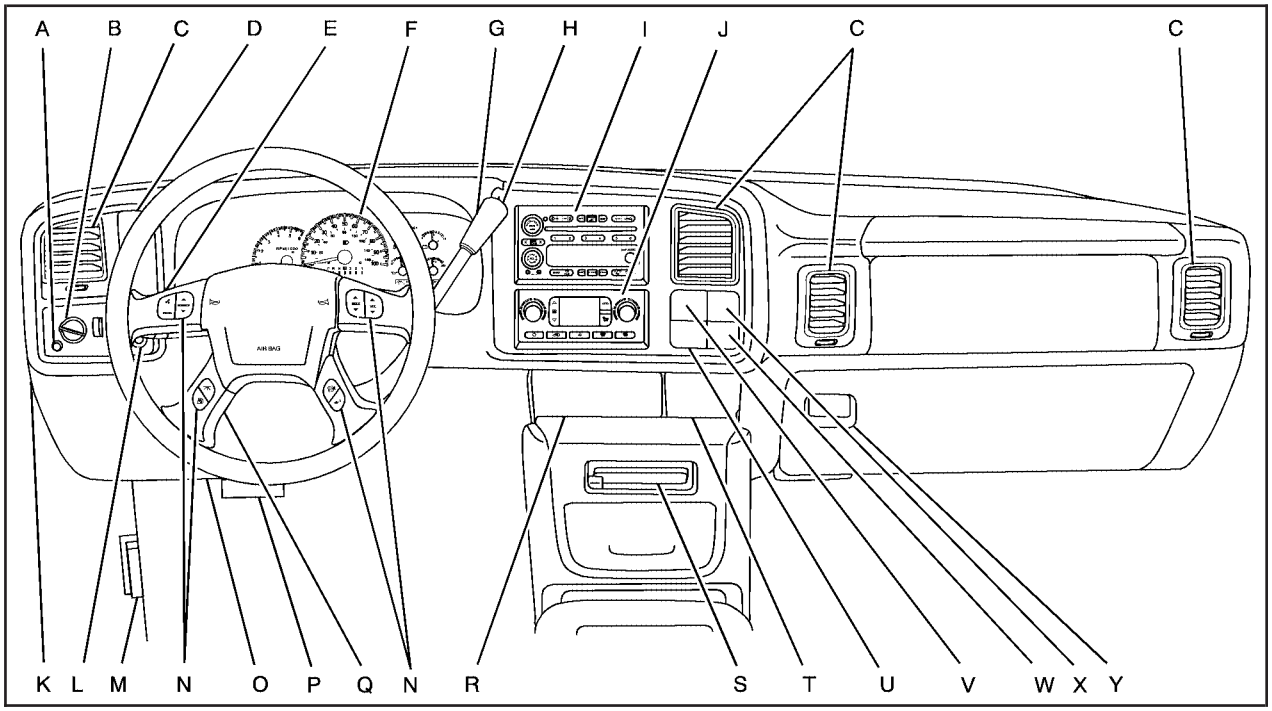

The main components of your instrument panel are the following:

A. Dome Lamp Button. See *Dome Lamps on page 3-17*.

B. Headlamp Controls. See *Headlamps on page 3-13*.

C. Air Outlets. See *Outlet Adjustment on page 3-30*.

D. Automatic Transfer Case/Electronic Transfer Case/Traction Assist System (TAS). See *Four-Wheel Drive on page 2-37*.

E. Multifunction Lever. See *Turn Signal/Multifunction Lever on page 3-7*.

F. Instrument Panel Cluster. See *Instrument Panel Cluster on page 3-32*.

G. Gearshift Lever (Automatic Transmission). See *Automatic Transmission Operation on page 2-26*.

H. Tow/Haul Selector and Overdrive Disable (Allison Transmission® Only) Button (If Equipped). See *Tow/Haul Mode on page 2-29*.

I. Audio System. See *Audio System(s) on page 3-69*.

J. Climate Control System. See *Climate Control System on page 3-21*, *Dual Climate Control System on page 3-22* and *Dual Automatic Climate Control System on page 3-25*.

K. Instrument Panel Fuse Block. *Instrument Panel Fuse Block on page 5-122*.

L. Cargo Lamp Button. See *Cargo Lamp on page 3-19*.

M. Hood Release. See *Hood Release on page 5-13*.

N. Steering Wheel Control Buttons (If Equipped). See *Driver Information Center (DIC) on page 3-50*.

O. Center Instrument Panel Block. See *Center Instrument Panel Fuse Block on page 5-124*.

P. Parking Brake Release. See *Parking Brake on page 2-48*.

Q. Tilt Wheel Lever. See *Tilt Wheel on page 3-7*.

R. Lighter and Accessory Power Outlet. See *Accessory Power Outlets on page 3-19*, and *Ashtrays and Cigarette Lighter on page 3-20*.

S. Storage Area. See *Front Storage Area on page 2-71*.

T. Ashtray. See *Ashtrays and Cigarette Lighter on page 3-20*.

U. Manual Selectable Ride Control (If Equipped). See *Manual Selectable Ride on page 4-10*.

V. 4-Wheel Steer Button (If Equipped). See *QUADRASTEER™ on page 4-14*.

W. Passenger Airbag Off Switch (If Equipped). See *Airbag Off Switch on page 1-73*.

X. Auxiliary Roof Mounted Lamp Button (If Equipped). See *Auxiliary Roof Mounted Lamp on page 3-17*.

Y. Glove Box. See *Glove Box on page 2-70*.

Hazard Warning Flashers

Your hazard warning flashers let you warn others. They also let police know you have a problem. Your front and rear turn signal lamps will flash on and off.

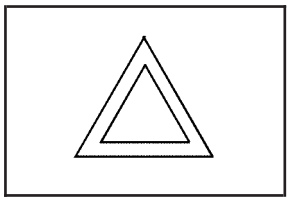

The hazard warning flasher button is located on top of the steering column.

Your hazard warning flashers work no matter what position your key is in, and even if the key is not in the ignition.

Press the button to make the front and rear turn signal lamps flash on and off. Press the button again to turn the flashers off.

When the hazard warning flashers are on, your turn signals will not work.

Other Warning Devices

If you carry reflective triangles, you can set them up at the side of the road about 300 feet (100 m) behind your vehicle.

Horn

To sound the horn, press the center pad on the steering wheel.

Tilt Wheel

If your vehicle is equipped with a tilt wheel, it will allow you to adjust the steering wheel before you drive. You can raise it to the highest level to give your legs more room when you exit and enter your vehicle.

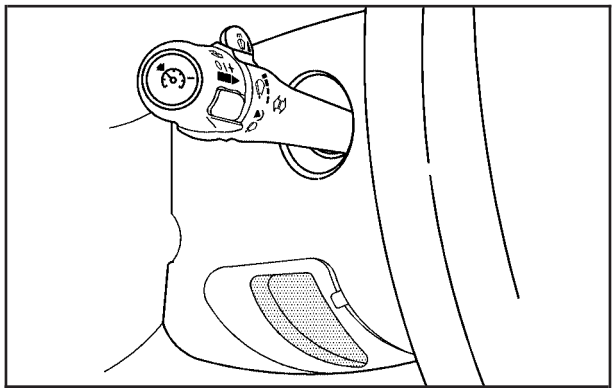

The tilt steering wheel lever is located on the lower left side of the column.

To tilt the wheel, hold the steering wheel and pull the lever. Then move the steering wheel to a comfortable position and release the lever to lock the wheel in place.

Turn Signal/Multifunction Lever

The lever on the left side of the steering column includes the following:

- Turn and Lane Change Signals. See *Turn and Lane-Change Signals on page 3-8*.
- Headlamp High/Low-Beam Changer. See *Headlamp High/Low-Beam Changer on page 3-9*.
- Flash-to-Pass. See *Flash-to-Pass on page 3-9*.
- Windshield Wipers. See *Windshield Wipers on page 3-9*.

- Windshield Washer. See *Windshield Washer on page 3-10*.
- Cruise Control. See *Cruise Control on page 3-10*.

For information on the headlamps, see *Headlamps on page 3-13*.

Turn and Lane-Change Signals

The turn signal has two upward (for right) and two downward (for left) positions. These positions allow you to signal a turn or a lane change.

To signal a turn, move the lever all the way up or down. When the turn is finished, the lever will return automatically.

To signal a lane change, just raise or lower the lever until the arrow starts to flash. Hold it there until you complete your lane change. The lever will return by itself when you release it.

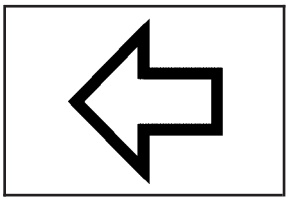

An arrow on the instrument panel cluster will flash in the direction of the turn or lane change.

As you signal a turn or a lane change, if the arrows flash more quickly than normal, a signal bulb may be burned out and other drivers won't see your turn signal.

If a bulb is burned out, replace it to help avoid an accident. If the arrows don't go on at all when you signal a turn, check for burned-out bulbs and a blown fuse. See *Fuses and Circuit Breakers on page 5-122*.

Turn Signal On Chime

If your turn signal is left on for more than 3/4 of a mile (1.2 km), a chime will sound at each flash of the turn signal and the message TURN SIGNAL ON will also appear in the DIC. To turn the chime and message off, move the turn signal lever to the off position.

Headlamp High/Low-Beam Changer

(Headlamp High/Low Beam Changer): To change the headlamps from low to high beam, push the lever toward the instrument panel. To return to low-beam headlamps, pull the multifunction lever toward you. Then release it.

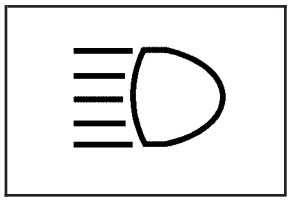

When the high beams are on, this indicator light on the instrument panel cluster will also be on.

Flash-to-Pass

This feature lets you use your high-beam headlamps to signal a driver in front of you that you want to pass. It works even if your headlamps are in the automatic position.

To use it, pull the turn signal lever toward you, then release it.

If your headlamps are in the automatic position or on low beam, your high-beam headlamps will turn on. They'll stay on as long as you hold the lever toward you. The high-beam indicator on the instrument panel cluster will come on. Release the lever to return to normal operation.

Windshield Wipers

You control the windshield wipers by turning the band with the wiper symbol on it.

(Mist): For a single wiping cycle, turn the band to mist. Hold it there until the wipers start. Then let go. The wipers will stop after one wipe. If you want more wipes, hold the band on mist longer.

(Delay): You can set the wiper speed for a long or short delay between wipes. This can be very useful in light rain or snow. Turn the band to choose the delay time. The closer to the top of the lever, the shorter the delay.

(Low Speed): For steady wiping at low speed, turn the band away from you to the first solid band past the delay settings. For high-speed wiping, turn the band further, to the second solid band past the delay settings. To stop the wipers, move the band to off.

(High Speed): For high-speed wiping, turn the band further, to the second solid band past the delay settings.

(Off): To stop the wipers, move the band to off.

Be sure to clear ice and snow from the wiper blades before using them. If they're frozen to the windshield, carefully loosen or thaw them. If your blades do become worn or damaged, get new blades or blade inserts.

Windshield Washer

(Washer Fluid): There is a paddle marked with the windshield washer symbol at the top of the multifunction lever. To spray washer fluid on the windshield, push the paddle. The wipers will clear the window and then either stop or return to your preset speed.

⚠ CAUTION:

In freezing weather, do not use your washer until the windshield is warmed. Otherwise the washer fluid can form ice on the windshield, blocking your vision.

Cruise Control

(Off): This position turns the system off.

(On): This position activates the system.

+ (Resume/Accelerate): Push the lever to this symbol to make the vehicle accelerate or resume to a previously set speed.

(Set): Press this button to set the speed.

With cruise control, you can maintain a speed of about 25 mph (40 km/h) or more without keeping your foot on the accelerator. This can really help on long trips. Cruise control does not work at speeds below about 25 mph (40 km/h).

If you apply your brakes, the cruise control will shut off.

⚠ CAUTION:

Cruise control can be dangerous where you cannot drive safely at a steady speed. So, do not use your cruise control on winding roads or in heavy traffic.

Cruise control can be dangerous on slippery roads. On such roads, fast changes in tire traction can cause needless wheel spinning, and you could lose control. Do not use cruise control on slippery roads.

Setting Cruise Control

⚠ CAUTION:

If you leave your cruise control on when you are not using cruise, you might hit a button and go into cruise when you do not want to. You could be startled and even lose control. Keep the cruise control switch off until you want to use cruise control.

1. Move the cruise control switch to on.
2. Get up to the speed you want.
3. Press in the set button at the end of the lever and release it.
4. Take your foot off the accelerator pedal.

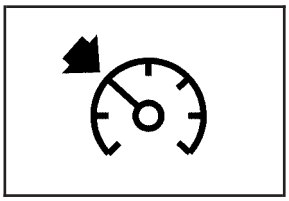

The cruise symbol on the instrument panel will illuminate when the cruise control is engaged.

Resuming a Set Speed

Suppose you set your cruise control at a desired speed and then you apply the brake. This, of course, disengages the cruise control. But you don't need to reset it.

Once you're going about 25 mph (40 km/h) or more, you can move the cruise control switch briefly from on to resume/accelerate.

You'll go right back up to your chosen speed and stay there.

If you hold the switch at resume/accelerate the vehicle will keep going faster until you release the switch or apply the brake. So unless you want to go faster, don't hold the switch at resume/accelerate.

Increasing Speed While Using Cruise Control

There are two ways to go to a higher speed:

- Use the accelerator pedal to get to the higher speed. Press the set button at the end of the lever, then release the button and the accelerator pedal. You'll now cruise at the higher speed. If the accelerator pedal is held longer than 60 seconds, cruise control will turn off.
- Move the cruise switch from on to resume/accelerate. Hold it there until you get up to the speed you want, and then release the switch. To increase your speed in very small amounts, move the switch briefly to resume/accelerate. Each time you do this, your vehicle will go about 1 mph (1.6 km/h) faster.

Reducing Speed While Using Cruise Control

- Press in the button at the end of the lever until you reach the lower speed you want, then release it.
- To slow down in very small amounts, briefly press the set button. Each time you do this, you'll go about 1 mph (1.6 km/h) slower.

Passing Another Vehicle While Using Cruise Control

Use the accelerator pedal to increase your speed. When you take your foot off the pedal, your vehicle will slow down to the cruise control speed you set earlier.

Using Cruise Control on Hills

How well your cruise control will work on hills depends upon your speed, load and the steepness of the hills. When going up steep hills, you may want to step on the accelerator pedal to maintain your speed. When going downhill, you may have to brake or shift to a lower gear to keep your speed down. Of course, applying the brake takes you out of cruise control. Many drivers find this to be too much trouble and don't use cruise control on steep hills.

Ending Cruise Control

There are four ways to turn off the cruise control:

- Step lightly on the brake pedal,
- move the cruise control switch to off, or
- shift the transmission to NEUTRAL (N).
- If your vehicle has the Stabilitrak® feature, cruise control will turn off if road conditions cause Stabilitrak® to activate.
- If the accelerator pedal is held for 60 seconds or longer, cruise control will turn off.

Erasing Speed Memory

When you turn off the cruise control or the ignition, your cruise control set speed memory is erased.

Headlamps

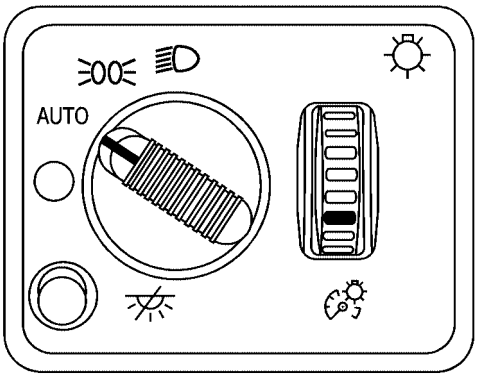

The control on the driver's side of your instrument panel operates the headlamps.

Turn the control clockwise to operate the lamps.

The headlamp control has four positions:

○ **(Off):** Turning the control to this position turns off the Daytime Running Lamps (DRL) and the automatic headlamps.

AUTO (Automatic): Turning the control to this position puts the system into automatic headlamp mode.

(Parking Lamps): Turning the control to this position turns on the parking lamps, together with the following:

- Sidemarker Lamps
- Taillamps
- License Plate Lamps
- Instrument Panel Lights
- Roof Marker Lamps (If Equipped)

(Headlamps): Turning the control to this position turns on the headlamps, together with the previously listed lamps and lights.

You can switch your headlamps from high to low-beam by pushing the turn signal/high-beam lever towards the instrument panel.

A circuit breaker protects your headlamps. If you have an electrical overload, your headlamps will flicker on and off. Have your headlamp wiring checked right away if this happens.

Headlamps on Reminder

A reminder chime will sound when your headlamps or parking lamps are manually turned on and your ignition is off, in LOCK, ACCESSORY, or your door is open. To disable the chime, turn the light off then back on.

Daytime Running Lamps (DRL)

Daytime Running Lamps (DRL) can make it easier for others to see the front of your vehicle during the day. DRL can be helpful in many different driving conditions, but they can be especially helpful in the short periods after dawn and before sunset. Fully functional daytime running lamps are required on all vehicles first sold in Canada.

The DRL system will come on when the following conditions are met:

- The ignition is on
- The exterior lamps control is AUTO
- The automatic transmission is not in PARK (P)
- The light sensor determines it is daytime

When the DRL are on, only your DRL lamps will be on. The taillamps, sidemarker and other lamps won't be on. The instrument panel won't be lit up either.

When it begins to get dark, the automatic headlamp system will switch from DRL to the headlamps.

When you turn the headlamp switch off, the headlamps will go off, and your DRL lamps will illuminate, provided it is not dark outside.

Shifting the transmission into PARK (P) will allow you to idle the vehicle with the DRL off. The DRL will stay off until you shift the transmission out of PARK (P).

This procedure applies only to vehicles first sold in the United States.

Automatic Headlamp System

When it is dark enough outside, your automatic headlamp system will turn on your headlamps at the normal brightness along with other lamps such as the taillamps, sidemarker, parking lamps and the instrument panel lights. The radio lights will also be dim.

To turn off the automatic headlamp system, turn the exterior lamps switch to the off position and then release. Turning off the automatic headlamp system with the headlamp switch is not available for vehicles first sold in Canada. For vehicles first sold in Canada, you can turn off the automatic headlamp system when parked at night by applying the parking brake before starting your vehicle. The headlamps will remain off once the vehicle is started for as long as you are parked. If you release the parking brake, the lights will turn on. If the parking brake is not released before you begin to drive, the exterior lamps will turn on above 2 mph (3.2 km/h).

Your vehicle is equipped with a light sensor located on the top of the instrument panel in the defroster grille. Be sure it is not covered, or the system will be on whenever the ignition is on.

The system may also turn on your headlamps when driving through a parking garage, heavy overcast weather or a tunnel. This is normal.

There is a delay in the transition between the daytime and nighttime operation of the Daytime Running Lamps (DRL) and the automatic headlamp systems so that driving under bridges or bright overhead street lights does not affect the system. The DRL and automatic headlamp system will only be affected when the light sensor sees a change in lighting lasting longer than the delay.

If you start your vehicle in a dark garage, the automatic headlamp system will come on immediately. Once you leave the garage, it will take approximately one minute for the automatic headlamp system to change to DRL if it is bright enough outside. During that delay, your instrument panel cluster may not be as bright as usual. Make sure your instrument panel brightness control is in the full bright position. See *Instrument Panel Brightness on page 3-17*.

To idle your vehicle with the automatic headlamp system off, turn the control to the off position.

You may be able to turn off your Automatic Headlamp System. See “Daytime Running Lamps (DRL)” later in this section for more information.

Your headlamps will also stay on after you exit the vehicle. You can program this feature using the Driver Information Center (DIC). See *Driver Information Center (DIC) on page 3-50*.

As with any vehicle, you should turn on the regular headlamp system when you need them.

Fog Lamps

If your vehicle has fog lamps, use them for better vision in foggy or misty conditions.

The fog lamp button is located on the left side of the instrument panel.

Your parking lamps and/or low-beam headlamps must be on for your fog lamps to work.

Press the button to turn the fog lamps on. Press the button again to turn them off. An indicator light will glow in the button when the fog lamps are on.

Remember, fog lamps alone will not give off as much light as your headlamps. Never use your fog lamps in the dark without turning on your headlamps.

The fog lamps will go off whenever your high-beam headlamps come on. When the high beams go off, the fog lamps will come on again.

The fog lamps will be cancelled after the ignition is turned off. If you still want to use the fog lamps after you restart the vehicle, you will need to press the fog lamp button again.

Auxiliary Roof Mounted Lamp

If your vehicle has this feature, this switch includes wiring provisions for a dealer or a qualified service center to install an auxiliary roof lamp.

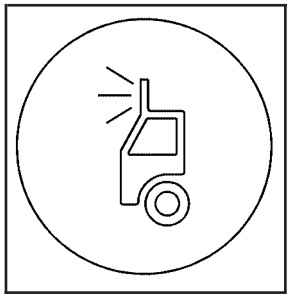

This switch is located on the center of the instrument panel near the climate controls.

When the switch wiring is connected to an auxiliary roof mounted lamp, pressing the switch will activate the lamp and illuminate an indicator light near the switch. Pressing the switch again will turn off the roof mounted lamp.

Instrument Panel Brightness

(Instrument Panel Brightness): This feature controls the brightness of the instrument panel lights.

The thumbwheel for this feature is located next to the headlamp control.

Turn the thumbwheel up to adjust the instrument panel lights. Turn the thumbwheel up to return the radio display to full brightness when the headlamps or parking lamps are on. To turn on the dome lamps, turn the thumbwheel all the way up.

Dome Lamps

The dome lamps will come on when you open a door.

You can also turn the dome lamps on by turning the thumbwheel, located next to the exterior lamps control, all the way up. In this position, the dome lamps will remain on whether a door is opened or closed.

Dome Lamp Override

(Dome Lamp Override): You can use the dome override button, located below the exterior lamps control, to set the dome lamps to come on automatically when a door is opened, or to remain off. To turn the lamps off, press the button into the in position. With the button in this position, the dome lamps will remain off when the doors are open. To return the lamps to automatic operation, press the button again and return it to the out position. With the button in this position, the dome lamps will come on when you open a door.

Entry Lighting

Your vehicle is equipped with an illuminated entry feature.

When the doors are opened, the dome lamps will come on if the dome override button is in the out position. If the dome override button is pressed in, the lamps will not come on.

Exit Lighting

With exit lighting, the interior lamps will come on when you remove the key from the ignition. The lights will not come on if the dome override button is pressed in.

Front Reading Lamps

The reading lamps are located on the overhead console.

To turn on the reading lamps, press the button located next to each lamp. To turn them off, press the button again.

The lamps can be adjusted to point in the direction you want.

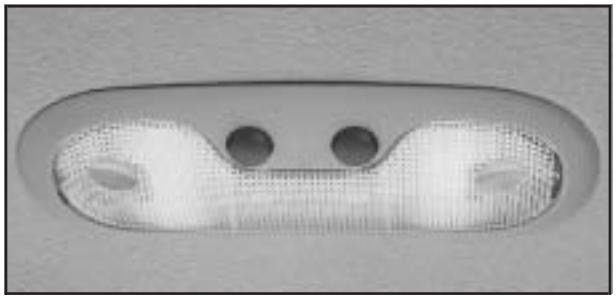

Your vehicle may also have reading lamps in other locations. To turn the lamps on or off, press the button located next to the lamp. The lamps are fixed and cannot be adjusted.

Cargo Lamp

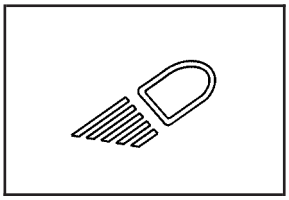

The cargo lamp button is located on the left side of the instrument panel. Press the button to turn the cargo lamp on. Press the button again to turn it off.

An indicator light on the instrument panel cluster will illuminate when the cargo lamp is turned on, and the ignition key is turned to RUN.

Accessory Power Outlets

With accessory power outlets you can plug in auxiliary electrical equipment such as a cellular telephone or CB radio.

Your vehicle may have two accessory power outlets, or may have one accessory power outlet located near the cigarette lighter, if equipped. The cigarette lighter is designed to fit only in the receptacle to the right of the accessory power outlet.

To use the outlet, lift the cover. When not using it, always close the cover.

Certain power accessory plugs may not be compatible to the accessory power outlet and could result in blown vehicle or adapter fuses. If you experience a problem, see your dealer for additional information on the accessory power plugs.

Notice: **Adding any electrical equipment to your vehicle may damage it or keep other components from working as they should. The repairs would not be covered by your warranty. Check with your dealer before adding electrical equipment.**

When adding electrical equipment, be sure to follow the proper installation instructions included with the equipment.

Notice: **Improper use of the power outlet can cause damage not covered by your warranty. Do not hang any type of accessory or accessory bracket from the plug because the power outlets are designed for accessory power plugs only.**

Ashtrays and Cigarette Lighter

Your vehicle may be equipped with a front ashtray located near the center of the instrument panel. Pull on the door to open it.

Notice: **If you put papers or other flammable items in the ashtray, hot cigarettes or other smoking materials could ignite them and possibly damage your vehicle. Never put flammable items in the ashtray.**

To remove the front ashtray, pull the ashtray toward you. To replace the ashtray, place the ashtray on the slides at the side of its location in the instrument panel. To use the cigarette lighter, push it in all the way, and let go. When it's ready, it will pop back out by itself.

Notice: **Holding a cigarette lighter in while it is heating will not allow the lighter to back away from the heating element when it is hot. Damage from overheating may occur to the lighter or heating element, or a fuse could be blown. Do not hold a cigarette lighter in while it is heating. Do not use anything other than the cigarette lighter in the heating element.**

Climate Controls

Climate Control System

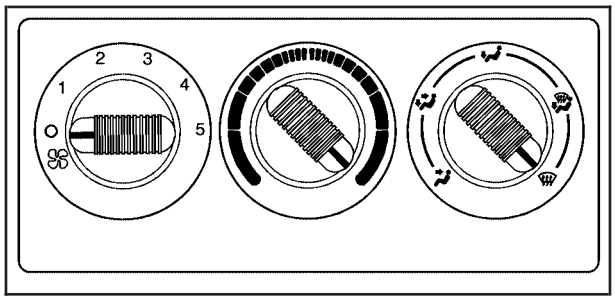

Fan Knob

The fan knob on the left side of the control panel adjusts the fan speed. To increase airflow, turn the knob clockwise. To decrease airflow, turn it counterclockwise. To turn the fan off, turn the knob to the off position.

(Off): If the fan is off, outside air will still enter the vehicle, and will be directed based on the position of the mode knob. The temperature can also be adjusted using the temperature knob.

Temperature Knob

The middle knob on the control panel lets you select the temperature of the air flowing into the passenger area. Turn the knob clockwise toward the red area for warmer air. Turn the knob counterclockwise toward the blue area for cooler air.

Mode Knob

The right knob on the control panel allows you to choose the direction of air delivery.

(Vent): This setting directs the air through the instrument panel outlets.

(Bi-Level): Air is delivered through the floor outlets as well as the instrument panel outlets. The flow can be divided between vent and floor outlets depending upon where the knob is placed between the settings.

(Floor): This setting directs most of the air through the floor outlets, and the rest of the air is divided between the windshield defroster outlets and the side window defroster outlets.

(Defog): Airflow is delivered through the floor outlets, the windshield defroster outlets and the side window defroster outlets. The air flow can be divided between floor and defrost depending upon where the knob is placed between the settings.

(Defrost): This setting directs most air through the windshield defroster outlets, side window defroster outlets and some through the floor outlets.

Dual Climate Control System

With this system you can control the heating, cooling and ventilation for your vehicle.

(Fan): Turn the left knob clockwise or counterclockwise to increase or decrease the fan speed. Turn the knob to the off position to turn off the fan. If the knob is in off, outside air will still enter the vehicle and will be directed based on the position of the mode knob. The temperature can also be adjusted using the temperature levers.

Turn the right knob clockwise or counterclockwise to direct the airflow inside of your vehicle.

To change the current mode, select one of the following:

(Vent): This mode directs air to the instrument panel vents.

(Bi-Level): This mode directs half of the air to the instrument panel vents; then directs most of the remaining air to the floor vents. A little air is directed toward the windshield and the side window vents. Cooler air is directed to the upper vents and warmer air to the floor vents.

(Floor): This mode directs most of the air to the floor vents with a little air directed to the windshield and the side window vents.

(Recirculation): The recirculation mode is used to recirculate the air inside of your vehicle. Use this mode to help prevent outside odors and/or dust from entering your vehicle or to help cool the air inside of your vehicle more quickly. Press this button to turn the recirculation mode on or off. The light on the recirculation button will illuminate. Recirculation cannot be used in floor, bi-level, defog or defrost modes. An indicator on the button will light up, flash three times and turn off when recirculation is selected in these modes. The air-conditioning compressor will also come on when this mode is activated. While in recirculation mode the windows may fog when the weather is cold and damp. To clear the fog, select either the blend or defrost mode and increase fan speed.

Temperature Control

Driver's Side: The lever on the left side of the climate control panel is used to raise or lower the temperature on the driver's side of the vehicle. This lever also adjusts the temperature to the center console outlets (if equipped).

Passenger's Side: The lever on the right side of the climate control panel is used to raise or lower the temperature on the passenger's side of the vehicle.

(Air Conditioning): Press this button to turn the air-conditioning system on or off. When the button is pressed, an indicator light will come on and the system will begin to cool and dehumidify the air inside of your vehicle. You may notice a slight change in engine performance when the air conditioning compressor shuts off and turns on again. This is normal.

Defogging and Defrosting

Fog on the inside of the windows is a result of high humidity (moisture) condensing on the cool window glass. This can be minimized if the climate control system is used properly. There are two modes to choose from to clear fog or frost from your windshield. Use the defog mode to clear the windows of fog or moisture and warm the passengers. Use the defrost mode to remove fog or frost from the windshield more quickly.

Turn the right knob to select one of the following modes:

(Defog): This mode directs the air to the floor outlets, windshield and the side window vents. The air conditioning compressor will run automatically to dehumidify the air to prevent window fogging. The recirculation mode cannot be selected while in the defog mode.

(Defrost): This mode directs most of the air to the windshield and the side window vents, with only a little air directed to the floor vents. The air conditioning compressor will run automatically to dehumidify the air to prevent window fogging. The recirculation mode cannot be selected while in defrost mode.

Do not drive the vehicle until all the windows are clear.

Rear Window Defogger

The lines you see on the rear window warm the glass. The rear window defogger uses a warming grid to remove fog from the rear window. If your vehicle has a sliding rear window, you will not have a rear window defogger, however, you will still have a rear window defogger button to activate the heated outside rearview mirrors, if equipped.

(Rear): Press this button to turn the rear window defogger on or off. An indicator light in the button will come on to let you know that the rear window defogger is activated.

The rear window defogger will automatically turn off several minutes after the button is pressed. Pressing the button while the defogger is running can also turn off the defogger.

If your vehicle is equipped with heated mirrors this button will activate them.

Notice: **Don't use anything sharp on the inside of the rear window. If you do, you could cut or damage the warming grid, and the repairs wouldn't be covered by your warranty. Do not attach a temporary vehicle license, tape, a decal or anything similar to the defogger grid.**

Dual Automatic Climate Control System

With this system, you can control the heating, cooling and ventilation in your vehicle. Your vehicle also has a flow-through ventilation system described later in this section.

You can select different climate control settings for the driver and passengers.

Driver's Side Temperature Knob

The driver's side knob is used to adjust the temperature of the air coming through the system on the driver's side. The temperature can be adjusted even if the system is turned off. This is possible since outside air will always flow through the system as the vehicle is moving forward unless it is set to recirculation mode. See "Recirculation" later in this section.

Turn the knob counterclockwise or clockwise to lower or increase the cabin temperature. The display will show the temperature setting decreasing or increasing and an arrow pointing to the driver will be displayed under and to the left of the temperature setting.

Passenger's Side Temperature Knob

The passenger's side knob can be used to change the temperature of the air coming through the system on the passenger's side of the vehicle. The temperature can be adjusted even if the system is turned off. This is possible since outside air will always flow through the system as the vehicle is moving forward unless it is set to recirculation mode. See "Recirculation" later in this section.

Turn the knob counterclockwise or clockwise to lower or increase the cabin temperature. The display will show the temperature setting decreasing or increasing and an arrow pointing to the passenger will be displayed under and to the right of the temperature setting.

The passenger's temperature setting can be set to match the driver's temperature setting by pressing and holding the AUTO button for four seconds. Both the driver and passenger arrows will be displayed.

Automatic Operation

AUTO (Automatic): When automatic operation is active the system will control the inside temperature, the air delivery, and the fan speed.

Use the steps below to place the entire system in automatic mode:

1. Press the AUTO button.

   When AUTO is selected, the display will change to show the current driver's set temperature, delivery mode and fan speed. Press the AUTO button again within five seconds to display the passenger's set temperature.

   If the driver and passenger's temperature settings are not the same, the opposite side temperature setting will be displayed for an additional five seconds. To make the passenger's temperature the same as the driver's press and hold the AUTO button for about four seconds.

   When AUTO is selected, the air conditioning operation and air inlet will be automatically controlled. The air conditioning compressor will run when the outside temperature is over about 40°F (4°C). The air inlet will normally be set to outside air. If it's hot outside, the air inlet may automatically switch to recirculate inside air to help quickly cool down your vehicle. The light on the button will illuminate in recirculation.

2. Set the driver's and passenger's temperature.

   To find your comfort setting, start with a 74°F (23°C) temperature setting and allow about 20 minutes for the system to regulate. Turn the driver's or passenger's side temperature knob to adjust the temperature setting as necessary. If you choose the temperature setting of 60°F (15°C) the system will remain at the maximum cooling setting. If you choose the temperature setting of 90°F (32°C) the system will remain at the maximum heat setting. Choosing either maximum setting will not cause the vehicle to heat or cool any faster.

   Be careful not to cover the sensor located on the top of the instrument panel near the windshield. This sensor regulates air temperature based on sun load, and also turns on your headlamps.

   To avoid blowing cold air in cold weather, the system will delay turning on the fan until warm air is available. The length of delay depends on the engine coolant temperature. Pressing the fan switch will override this delay and change the fan to a selected speed.

(Off): Press this button to turn off the entire climate control system. Outside air will still enter the vehicle, and will be directed to the floor. This direction can be changed by pressing the mode button. The temperature can also be adjusted using either temperature knob. Press the up or down arrows on the fan switch, the defrost button, the AUTO button, or the air conditioning button to turn the system on when it is off.

Manual Operation

You may manually adjust the air delivery mode or fan speed.

(Fan): The switch with the fan symbol allows you to manually adjust the fan speed. Press the up arrow to increase fan speed and the down arrow to decrease fan speed.

Pressing this button when the system is off will turn the system on.

(Mode): Press this button to manually change the direction of the airflow in your vehicle; keep pressing the button until the desired mode appears on the display.

If you press the mode button to select an air delivery mode, the display will change to show you the selected air mode delivery. The display will then show the current status of the system. When the system is turned off, the display will go blank after displaying the current status of the system.

(Panel): This setting will deliver air to the instrument panel outlets.

(Bi-Level): This setting will deliver warmer air to the floor and cooler air to the instrument panel outlets.

(Floor): This setting will deliver air to the floor outlets.

(Defog): See “Defogging and Defrosting” later in this section.

(Recirculation): Press this button to limit the amount of outside air entering your vehicle. The light on the recirculation button will glow. This is helpful when you are trying to limit odors entering your vehicle and for maximum air conditioning performance in hot weather. Press this button again to allow outside air to enter the vehicle. The light on the recirculation button will go off.

Pressing this button also cancels the auto recirculation feature. To resume the auto recirculation function, press the AUTO button. Each time the vehicle is started, the system will revert to the auto recirculation function.

If you select recirculation while in defrost, defog or floor, the light in the button will flash and then go out to let you know that this is not allowed. This is normal and helps to prevent fogging.

When the weather is cool or damp, operating the system in recirculation for extended periods of time may cause fogging of the vehicle's windows. To clear the fog, select either defog or front defrost.

You may also notice that the A/C compressor will run while in recirculation mode. This is normal and helps to prevent fogging.

◯ **(Off):** Press this button to turn off the entire climate control system. Outside air will still enter the vehicle, and will be directed to the floor. This direction can be changed by pressing the mode button. The temperature can also be adjusted using either temperature knob. Press the up or down arrows on the fan switch, the defrost button, the AUTO button, or the air conditioning button to turn the system on when it is off.

Display

If you press the MODE button to select an air delivery mode, the display will change to show you the selected air delivery mode. After ten seconds, the display will change to show the driver temperature setting and the selected mode.

If you press the up or down arrows on the fan switch, the display will change to show the selected fan speed. After ten seconds, the display will change to show the driver temperature setting and the selected mode.

Whenever you press AUTO, the display will change to show the following:

- The current driver's set temperature and an arrow for five seconds
- The current passenger's set temperature setting and an arrow for five seconds
- The automatic air delivery mode and fan speed

If the driver's and passenger's temperature settings are the same when AUTO is pressed, the temperature setting and both arrows will be displayed for five seconds along with the automatic air delivery mode and fan speed. After the five second update, the display will change to show the temperature setting, both arrows and AUTO.

Air Conditioning

(Air Conditioning): Press this button to turn the air conditioning (A/C) compressor on and off. The snowflake symbol will appear on the display when the A/C is on and will turn off when the air conditioning is off.

Pressing this button when the outside temperature is too cool for air conditioning will make the snowflake symbol flash three times and then turn off to let you know the air conditioning mode is not available. If the air conditioning is on and the outside temperature drops below a temperature which is too cool for air conditioning to be effective, the snowflake symbol will turn off to let you know the air conditioning mode has been canceled.

When air conditioning is selected or in AUTO mode, the system will run the air conditioning automatically to cool and dehumidify the air entering the vehicle. If you select A/C off while in front defrost, defog or recirculation, the A/C snowflake symbol will turn off, but the A/C compressor will still run to help prevent fogging.

On hot days, open the windows long enough to let hot inside air escape. This reduces the time it takes for your vehicle to cool down. Then keep your windows closed for the air conditioner to work its best.

On cool, but sunny days while using manual operation of the automatic system, use bi-level to deliver warm air to the floor and cooler air to the instrument panel outlets. To warm or cool the air delivered, turn the temperature knob to the desired setting.

In AUTO mode the system will cool and dehumidify the air inside the vehicle. Also while in AUTO mode, the system will maximize its performance by using recirculation as necessary.

Defogging and Defrosting

You can use either defog or front defrost to clear fog or frost from your windshield. Use the defog mode to clear the windows of fog or moisture. Use the front defrost button to defrost the front windshield.

(Defog): Use this setting to clear the windows of fog or moisture. Press the mode button to select this setting. This setting will deliver air to the floor and windshield outlets.

(Front Defrost): Press the front defrost button to defrost the windshield. The system will automatically control the fan speed if you select defrost from AUTO mode. If the outside temperature is 40°F (4°C) or warmer, your air conditioning compressor will automatically run to help dehumidify the air and dry the windshield.

Rear Window Defogger

The lines you see on the rear window warm the glass. The rear window defogger uses a warming grid to remove fog from the rear window. If your vehicle has a sliding rear window, you will not have a rear window defogger, however, you will still have a rear window defogger button to activate the heated outside rearview mirrors, if equipped.

(Rear): Press this button to turn the rear window defogger on or off. An indicator light in the button will come on to let you know that the rear window defogger is activated.

The rear window defogger will turn off about 10 minutes after the button is pressed. If you need additional warming time, press the button again.

If your vehicle is equipped with heated mirrors this button will activate them.

Notice: **Using a razor blade or sharp object to clear the inside rear window may damage the rear window defogger. Repairs would not be covered by your warranty. Do not clear the inside of the rear window with sharp objects.**

Outlet Adjustment

Use the air outlets located in the center and on the side of your instrument panel to direct the airflow.

Operation Tips

- Keep the hood and front air inlets free of ice, snow, or any other obstruction (such as leaves). The heater and defroster will work far better, reducing the chance of fogging the inside of your windows.
- When you enter a vehicle in cold weather, turn the fan knob all the way to the right for a few moments before driving. This helps clear the intake ducts of snow and moisture, and reduces the chance of fogging the inside of your window.
- Keep the air path under the front seats clear of objects. This helps air to circulate throughout your vehicle.
- Adding outside equipment to the front of your vehicle, such as hood-air deflectors, may affect the performance of the heating and air conditioning system. Check with your dealer before adding equipment to the outside of your vehicle.

Warning Lights, Gages, and Indicators

This part describes the warning lights and gages that may be on your vehicle. The pictures will help you locate them.

Warning lights and gages can signal that something is wrong before it becomes serious enough to cause an expensive repair or replacement. Paying attention to your warning lights and gages could also save you or others from injury.

Warning lights come on when there may be or is a problem with one of your vehicle's functions. As you will see in the details on the next few pages, some warning lights come on briefly when you start the engine just to let you know they're working. If you are familiar with this section, you should not be alarmed when this happens.

Gages can indicate when there may be or is a problem with one of your vehicle's functions. Often gages and warning lights work together to let you know when there's a problem with your vehicle.

When one of the warning lights comes on and stays on when you are driving, or when one of the gages shows there may be a problem, check the section that tells you what to do about it. Please follow this manual's advice. Waiting to do repairs can be costly – and even dangerous. So please get to know your warning lights and gages. They're a big help.

Your vehicle also has a driver information system that works along with the warning lights and gages. See *Driver Information Center (DIC) on page 3-50*.

Instrument Panel Cluster

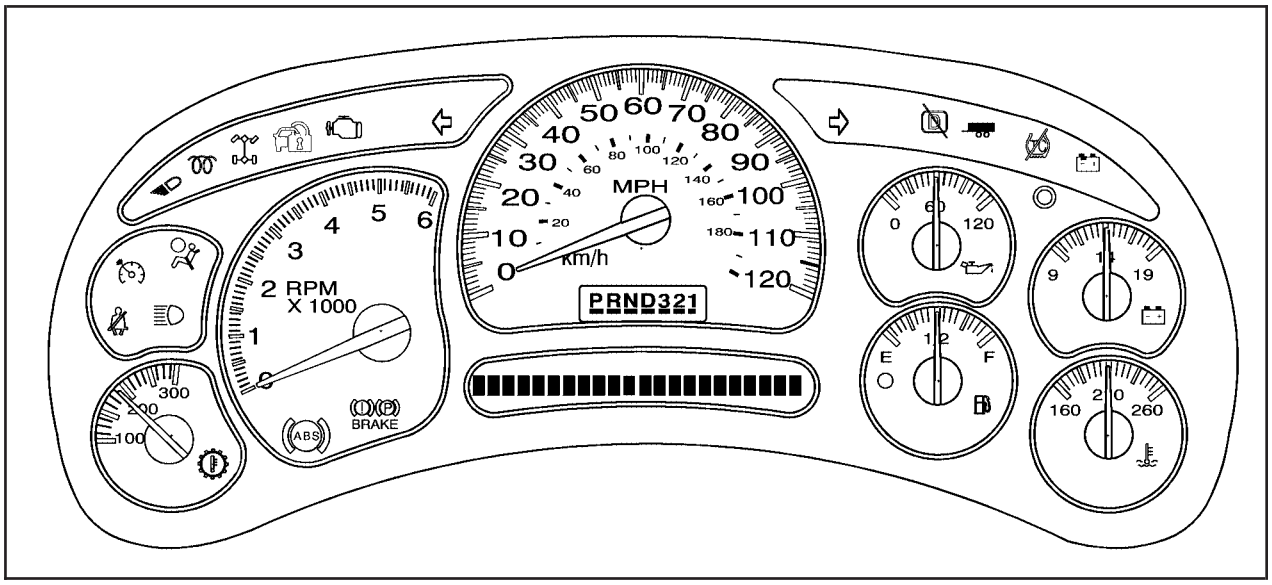

United States Heavy Duty Automatic Transmission version shown. Canada, Light Duty Automatic and Manual Transmission Clusters similar.

Your instrument cluster is designed to let you know at a glance how your vehicle is running. You'll know how fast you're going, about how much fuel you have and many other things you'll need to know to drive safely and economically.

Speedometer and Odometer

Your speedometer lets you see your speed in both miles per hour (mph) and kilometers per hour (km/h). Your odometer shows how far your vehicle has been driven, in either miles (used in the United States) or kilometers (used in Canada).

Engine Hour Meter Display

If equipped, the Driver Information Center (DIC) can also display the number of hours the engine has run. To display the hour meter, turn the ignition off, press and hold the reset button for at least four seconds. The hour meter will be displayed for up to 30 seconds, or until the ignition is turned on. See *DIC Operation and Displays on page 3-51* for more information.

Trip Odometer

The trip odometer can tell you how far your vehicle has been driven since you last set the trip odometer to zero.

Press the reset button, located on the instrument panel cluster next to the trip odometer display, to toggle between the trip odometer and the regular odometer. Holding the reset button for approximately one second while the trip odometer is displayed will reset it.

To display the odometer reading with the ignition off, press the reset button.

Tachometer

Your tachometer displays the engine speed in revolutions per minute (rpm). See “Grade Braking” under *Tow/Haul Mode on page 2-29* for more information.

Notice: **If you operate your vehicle with the tachometer above 6,000 rpm, your vehicle could be damaged. The repairs would not be covered by your warranty. Do not operate the engine with the tachometer above 6,000 rpm.**

Safety Belt Reminder Light

When the key is turned to RUN or START, a chime will be provided for several seconds to remind people to buckle their safety belts. The driver safety belt light will also be provided and stay on for several seconds, then it will flash for several more. You should buckle your seat belt.

If your vehicle is not equipped with the passenger sensing system, this chime and light will be repeated if the driver remains unbuckled and the vehicle is in motion.

See *Passenger Sensing System on page 1-76* for more information.

If the driver's belt is buckled, neither the chime nor the light will come on.

Airbag Readiness Light

There is an airbag readiness light on the instrument panel cluster, which shows the airbag symbol. The system checks the airbag's electrical system for malfunctions. The light tells you if there is an electrical problem. The system check includes the airbag sensors, the airbag modules, the passenger sensing system (if equipped), the wiring and the crash sensing and diagnostic module. For more information on the airbag system, see *Airbag System on page 1-66*.

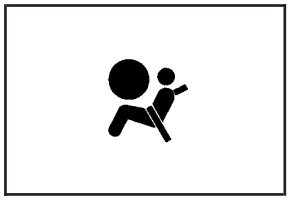

This light will come on when you start your vehicle, and it will flash for a few seconds. This means the system is ready.

If the airbag readiness light stays on after you start the vehicle or comes on when you are driving, your airbag system may not work properly. Have your vehicle serviced right away.

Airbag Off Light

United States

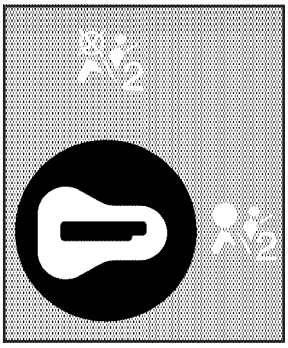

Canada

If your vehicle has an airbag off switch, it also has an airbag off light. See *Airbag Off Switch on page 1-73* for more on this, including important safety information.

When you turn the right front passenger's airbag off, this light will come on and stay on to remind you that the airbag has been turned off. This light will go off when you turn the airbag on.

⚠ CAUTION:

If the right front passenger's airbag is turned off for a person who is not in a risk group identified by the national government, that person will not have the extra protection of an airbag. In a crash, the airbag will not be able to inflate and help protect the person sitting there. Do not turn off the passenger's airbag unless the person sitting there is in a risk group. See *Airbag Off Switch on page 1-73* for more on this, including important safety information.

⚠ CAUTION:

If the airbag readiness light ever comes on when you have turned off the airbag, it means that something may be wrong with the airbag system. The right front passenger's airbag could inflate even though the switch is off.

If your vehicle is a regular cab pickup and this ever happens, do not let anyone whom the national government has identified as a member of a passenger airbag risk group sit in the right front passenger's position (for example, do not secure a rear-facing child restraint in your vehicle) until you have your vehicle serviced.

If your vehicle is an extended cab pickup and this ever happens, do not let anyone whom the national government has identified as a member of the passenger airbag risk group sit in the right front passenger's position (for example, do not secure a rear-facing child restraint in the right front passenger's seat) until you have your vehicle serviced.

Passenger Airbag Status Indicator

If your vehicle has the passenger sensing system, your rearview mirror will have a passenger airbag status indicator.

Passenger Airbag Status Indicator – United States

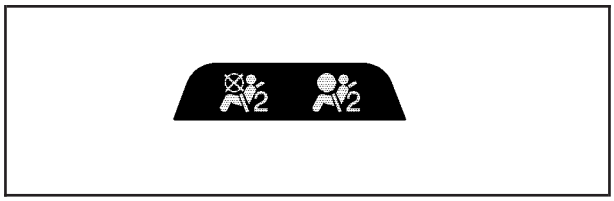

Passenger Airbag Status Indicator – Canada

When the ignition key is turned to RUN or START, the passenger airbag status indicator will light ON and OFF, or the symbol for on and off, for several seconds as a system check. Then, after several more seconds, the status indicator will light either ON or OFF, or either the on or off symbol to let you know the status of the right front passenger's frontal airbag.

If the word ON or the on symbol is lit on the passenger airbag status indicator, it means that the right front passenger's frontal airbag is enabled (may inflate).

⚠ CAUTION:

If the on indicator comes on when you have a rear-facing child restraint installed in the right front passenger's seat, it means that the passenger sensing system has not turned off the passenger's frontal airbag. A child in a rear-facing child restraint can be seriously injured or killed if the right front passenger's airbag inflates. This is because the back of the rear-facing child restraint would be very close to the inflating airbag. Do not use a rear-facing child restraint in the right front passenger's seat unless the airbag has been turned off.

If the word OFF or the off symbol is lit on the passenger airbag status indicator, it means that the passenger sensing system or the airbag off switch has turned off the right front passenger's airbag. See *Passenger Sensing System on page 1-76* or *Airbag Off Switch on page 1-73* for more on this, including important safety information.

⚠ CAUTION:

If the right front passenger's airbag is turned off for a person who is not in a risk group identified by the national government, that person will not have the extra protection of an airbag. In a crash, the airbag will not be able to inflate and help protect the person sitting there. Do not turn off the passenger's airbag unless the person sitting there is in a risk group. See *Airbag Off Switch on page 1-73* for more on this, including important safety information.

If, after several seconds, all status indicator lights remain on, or if there are no lights at all, there may be a problem with the lights or the passenger sensing system. See your dealer for service.

⚠ CAUTION:

If the airbag off indicator and the airbag readiness light ever come on together, it means that something may be wrong with the airbag system. If this ever happens, have the vehicle serviced promptly, because an adult-size person sitting in the right front passenger seat may not have the protection of the airbag. See *Airbag Readiness Light on page 3-34*.

Battery Warning Light

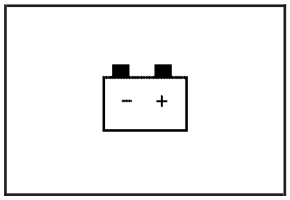

If this light is displayed when the engine is running, you may have a problem with your charging system.

The battery display will also stay on while the key is in RUN until the engine is started.

If the light stays on after starting the engine it could indicate a problem with the generator drive belt, or some other charging system problem. Have it checked right away. Driving with this light displayed could drain your battery.

If you must drive a short distance with this light displayed, it helps to turn off all your accessories, such as the radio and the air conditioner.

Voltmeter Gage

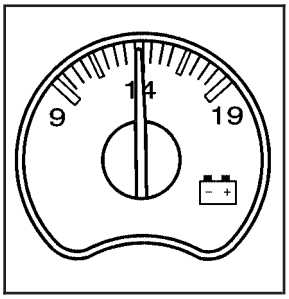

When your engine is not running, but the ignition is in RUN, this gage shows your battery's state of charge in DC volts.

When the engine is running, the gage shows the condition of the charging system. The gage may transition from a higher to lower or a lower to higher reading, this is normal. Readings between the low and high warning zones indicate the normal operating range. The voltmeter gage may also read lower when in fuel economy mode. This is normal.

Readings in the low warning zone may occur when a large number of electrical accessories are operating in the vehicle and the engine is left at an idle for an extended period. This condition is normal since the charging system is not able to provide full power at engine idle. As engine speeds are increased, this condition should correct itself as higher engine speeds allow the charging system to create maximum power.

You can only drive for a short time with the reading in either warning zone. If you must drive, turn off all unnecessary accessories.

Readings in either warning zone indicate a possible problem in the electrical system. Have the vehicle serviced as soon as possible.

Up-Shift Light (Manual Transmission)

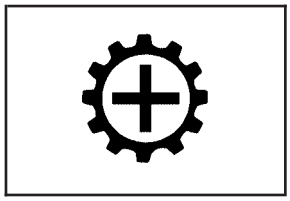

This light is used on some models with manual transmissions.

The shift indicator light will show you when to shift to the next highest gear, and will help you get the best fuel economy.

Brake System Warning Light

With the ignition on, the brake system warning light will flash when you set the parking brake. The light will flash if the parking brake doesn't release fully. If you try to drive with the parking brake engaged, a chime will sound when the vehicle speed is greater than 3 mph (5 km/h).

Your vehicle's hydraulic brake system is divided into two parts. If one part isn't working, the other part can still work and stop you. For good braking, though, you need both parts working well.

If the warning light comes on and a chime sounds there could be a brake problem. Have your brake system inspected right away.

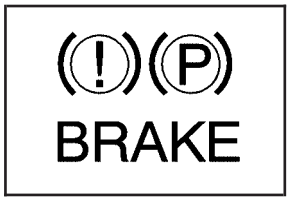

United States

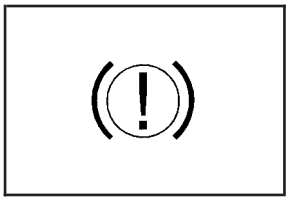

Canada

This light should come on briefly when you turn the ignition key to RUN. If it doesn't come on then, have it fixed so it will be ready to warn you if there's a problem.

If the light comes on while you are driving, pull off the road and stop carefully. You may notice that the pedal is harder to push or may go closer to the floor. It may take longer to stop. If the light is still on, have the vehicle towed for service. See *Towing Your Vehicle on page 4-62*.

⚠ CAUTION:

Your brake system may not be working properly if the brake system warning light is on. Driving with the brake system warning light on can lead to an accident. If the light is still on after you have pulled off the road and stopped carefully, have the vehicle towed for service.

Anti-Lock Brake System Warning Light

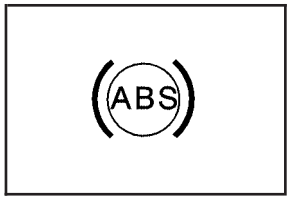

With the anti-lock brake system, this light will come on when you start your engine and may stay on for several seconds.

That's normal. If the light doesn't come on then, have it fixed so it will be ready to warn you if there is a problem.

If the light stays on, or comes on when you're driving, your vehicle needs service. You will also hear a chime sound when the light is on steady. If the regular brake system warning light isn't on, you still have brakes, but you don't have anti-lock brakes. If the regular brake system warning light is also on you don't have anti-lock brakes and there's a problem with your regular brakes. In addition to both lights, you will also hear a chime sound on the first occurrence of a problem and each time the vehicle is shut off and then restarted. See *Brake System Warning Light on page 3-39*.

Traction Off Light

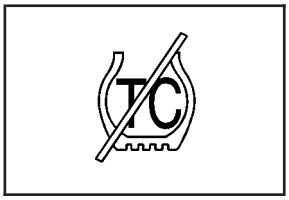

If you have the Traction Assist System, this light should come on briefly when you turn the ignition to RUN.

If the light doesn't come on then, the system may require service; have it fixed so it will be there to warn you if the system is turned off.

If the light stays on, or comes on when you're driving, there may be a problem with your Traction Assist System and your vehicle may need service. When this light is on, the system will not limit wheel spin. Adjust your driving accordingly.

The traction off light may come on for the following reasons:

- If you turn the system off by pressing the TAS on/off button located to the left of the steering wheel, the light will come on and stay on. To turn the system back on, press the button again; the light should go off.
- If you move the shift lever to FIRST (1), the light will come on and stay on to indicate that the traction system is off. This is normal operation.
  To turn the system back on, move the shift lever back to a position other than FIRST (1); the light should go off. See *Traction Assist System (TAS) on page 4-8*.
- The light will come on and stay on if the TAS automatic engagement feature has been turned off. To turn the system on, press the TAS off/on button; the light should go off. To turn the automatic engagement feature back on, see *Traction Assist System (TAS) on page 4-8*.
- If the Traction Assist System is affected by an anti-lock brake system, TAS or engine-related problem, the system will turn off and the light will come on. Have your vehicle serviced.
- If the vehicle is driven over an extremely rough road, the system will turn off and the light will come on. The light will go off a few seconds after the rough road conditions go away or when the vehicle comes to a complete stop. This is normal operation.

Engine Coolant Temperature Gage

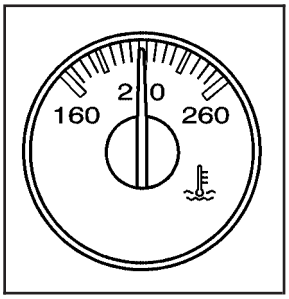

United States

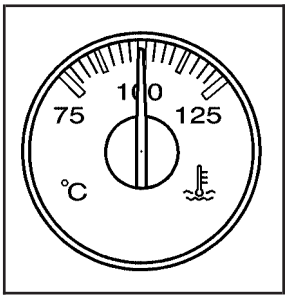

Canada

This gage shows the engine coolant temperature.

It also provides an indicator of how hard your vehicle is working. During a majority of the operation, the gage will read 210°F (100°C) or less. If you are pulling a load or going up hills, it is normal for the temperature to fluctuate and approach the 250°F (122°C) mark. If the gage reaches the 260°F (125°C) mark, it indicates that the cooling system is working beyond its capacity.

See *Engine Overheating on page 5-37*.

Transmission Temperature Gage

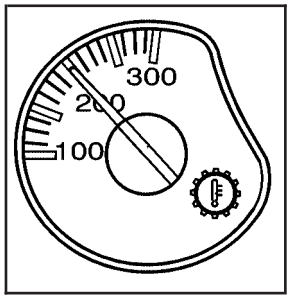

United States

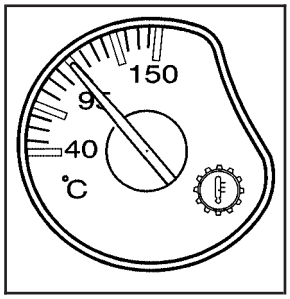

Canada

Your vehicle may be equipped with a transmission temperature gage.

When your ignition is on, the gage shows the temperature of the transmission fluid. The normal operating range is from 180°F (82°C) to about 200°F (93°C).

At approximately 265°F (130°C), the driver information center will display a TRANSMISSION HOT message and the transmission will enter a transmission protection mode. When the transmission enters the protection mode, you may notice a change in the transmission shifting patterns. The transmission will return to normal shifting patterns when the transmission fluid temperature falls below 260°F (127°C).

See *Driver Information Center (DIC) on page 3-50* for further information.

If your vehicle has an Allison transmission, and the fluid reaches temperatures of approximately 275°F (135°C) or greater, the driver information center will display a TRANS HOT IDLE ENGINE warning message and a chime will sound until the temperature falls below 265°F (129°C). Pull the vehicle off the roadway when it is safe to do so. Set the parking brake, place the transmission in PARK (P) and allow the engine to idle until the transmission temperature falls below 265°F (129°C). If the transmission continues to operate above 265°F (130°C), contact your nearest dealer or the GM Roadside Assistance Center. See *Roadside Assistance Program on page 7-5*.

Notice: **If you drive your vehicle with the transmission temperature gage above normal operating range, you can damage the transmission. This could lead to costly repairs that would not be covered by your warranty. Do not drive your vehicle while the transmission temperature gage reading is above normal. See your dealer for service.**

The following situations can cause the transmission to operate at higher temperatures:

- Towing a trailer
- Hot outside air temperatures
- Vehicle overloading
- Hauling a large or heavy load
- Low transmission fluid level
- High transmission fluid level
- Restricted air flow to the radiator and the auxiliary transmission oil cooler (if equipped).

A temporary solution to hotter transmission operating temperatures may be to let the transmission cool down. If the transmission is operated at higher temperatures on a frequent basis, see *Scheduled Maintenance on page 6-4* for the proper transmission maintenance intervals.

Malfunction Indicator Lamp

Check Engine Light

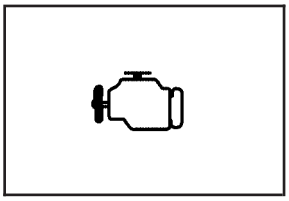

Your vehicle is equipped with a computer which monitors operation of the fuel, ignition, and emission control systems.

This system is called OBD II (On-Board Diagnostics-Second Generation) and is intended to assure that emissions are at acceptable levels for the life of the vehicle, helping to produce a cleaner environment. The check engine light comes on to indicate that there is a problem and service is required. Malfunctions often will be indicated by the system before any problem is apparent. This may prevent more serious damage to your vehicle. This system is also designed to assist your service technician in correctly diagnosing any malfunction.

Notice: **If you keep driving your vehicle with this light on, after awhile, your emission controls may not work as well, your fuel economy may not be as good, and your engine may not run as smoothly. This could lead to costly repairs that may not be covered by your warranty.**

Notice: **Modifications made to the engine, transmission, exhaust, intake, or fuel system of your vehicle or the replacement of the original tires with other than those of the same Tire Performance Criteria (TPC) can affect your vehicle's emission controls and may cause this light to come on. Modifications to these systems could lead to costly repairs not covered by your warranty. This may also result in a failure to pass a required Emission Inspection/Maintenance test.**

This light should come on, as a check to show you it is working, when the ignition is on and the engine is not running. If the light does not come on, have it repaired. This light will also come on during a malfunction in one of two ways:

- **Light Flashing** — A misfire condition has been detected. A misfire increases vehicle emissions and may damage the emission control system on your vehicle. Diagnosis and service may be required.
- **Light On Steady** — An emission control system malfunction has been detected on your vehicle. Diagnosis and service may be required.

If the Light is Flashing

The following may prevent more serious damage to your vehicle:

- Reducing vehicle speed
- Avoiding hard accelerations
- Avoiding steep uphill grades
- If you are towing a trailer, reduce the amount of cargo being hauled as soon as it is possible

If the light stops flashing and remains on steady, see "If the Light Is On Steady" following.

If the light continues to flash, when it is safe to do so, stop the vehicle. Find a safe place to park your vehicle. Turn the key off, wait at least 10 seconds and restart the engine. If the light remains on steady, see "If the Light Is On Steady" following. If the light is still flashing, follow the previous steps, and see your dealer for service as soon as possible.

If the Light Is On Steady

You may be able to correct the emission system malfunction by considering the following:

Did you recently put fuel into your vehicle?

If so, reinstall the fuel cap, making sure to fully install the cap. See *Filling Your Tank on page 5-10*. The diagnostic system can determine if the fuel cap has been left off or improperly installed. A loose or missing fuel cap will allow fuel to evaporate into the atmosphere. A few driving trips with the cap properly installed should turn the light off.

Did you just drive through a deep puddle of water?

If so, your electrical system may be wet. The condition will usually be corrected when the electrical system dries out. A few driving trips should turn the light off.

Have you recently changed brands of fuel?

If so, be sure to fuel your vehicle with quality fuel. See *Gasoline Octane on page 5-6*. Poor fuel quality will cause your engine not to run as efficiently as designed. You may notice this as stalling after start-up, stalling when you put the vehicle into gear, misfiring, hesitation on acceleration, or stumbling on acceleration. (These conditions may go away once the engine is warmed up.) This will be detected by the system and cause the light to turn on.

If you experience one or more of these conditions, change the fuel brand you use. It will require at least one full tank of the proper fuel to turn the light off.

If none of the above steps have made the light turn off, your dealer can check the vehicle. Your dealer has the proper test equipment and diagnostic tools to fix any mechanical or electrical problems that may have developed.

Emissions Inspection and Maintenance Programs

Some state/provincial and local governments have or may begin programs to inspect the emission control equipment on your vehicle. Failure to pass this inspection could prevent you from getting a vehicle registration.

Here are some things you need to know to help your vehicle pass an inspection:

Your vehicle will not pass this inspection if the check engine light is on or not working properly.

Your vehicle will not pass this inspection if the OBD (on-board diagnostic) system determines that critical emission control systems have not been completely diagnosed by the system. The vehicle would be considered not ready for inspection. This can happen if you have recently replaced your battery or if your battery has run down. The diagnostic system is designed to evaluate critical emission control systems during normal driving. This may take several days of routine driving. If you have done this and your vehicle still does not pass the inspection for lack of OBD system readiness, your GM dealer can prepare the vehicle for inspection.

Oil Pressure Gage

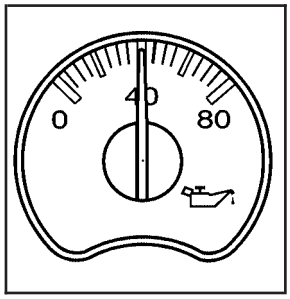

United States

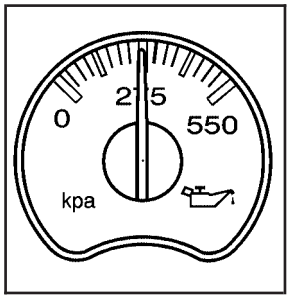

Canada

The oil pressure gage shows the engine oil pressure in psi (pounds per square inch) when the engine is running. Canadian vehicles indicate pressure in kPa (kilopascals).

Oil pressure may vary with engine speed, outside temperature and oil viscosity, but readings above the low pressure zone indicate the normal operating range.

A reading in the low pressure zone may be caused by a dangerously low oil level or some other problem causing low oil pressure. Check your oil as soon as possible. See “OIL PRESSURE LOW” under *DIC Warnings and Messages on page 3-54* and *Engine Oil (Gasoline Engine) on page 5-20*.

⚠ CAUTION:

Do not keep driving if the oil pressure is low. If you do, your engine can become so hot that it catches fire. You or others could be burned. Check your oil as soon as possible and have your vehicle serviced.

Notice: **Lack of proper engine oil maintenance may damage the engine. The repairs would not be covered by your warranty. Always follow the maintenance schedule in this manual for changing engine oil.**

Security Light

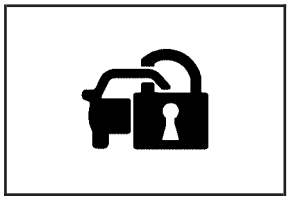

This light flashes when the vehicle security system is activated.

Cruise Control Light

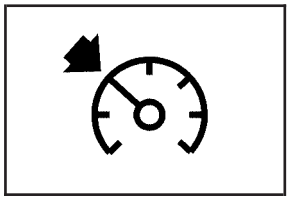

This light comes on whenever you set your cruise control.

The light will go out when the cruise control is turned off. See *Cruise Control on page 3-10* for more information.

Highbeam On Light

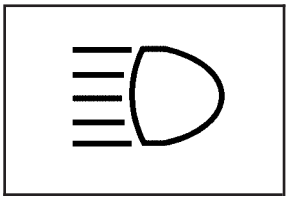

This light will illuminate when the headlamp high beams are in use.

See *Headlamp High/Low-Beam Changer on page 3-9*.

Four-Wheel-Drive Light

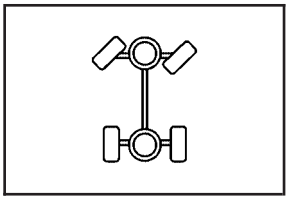

The four-wheel-drive indicator will light up when you shift a manual transfer case into four-wheel drive and the front axle engages.

Some delay between shifting and the indicator's lighting is normal.

See *Four-Wheel Drive on page 2-37* for more information.

Tow/Haul Mode Light

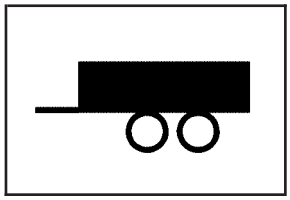

This light is displayed when the Tow/Haul mode has been activated.

For more information, see *Tow/Haul Mode on page 2-29*.

Overdrive Disable (Allison Transmission® Only)

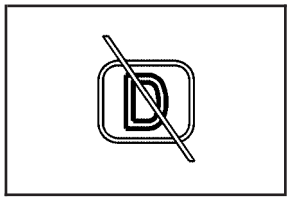

This light will illuminate when the overdrive disable feature is activated. The overdrive disable feature will prevent your vehicle from shifting into fifth (5) gear.

Fuel Gage

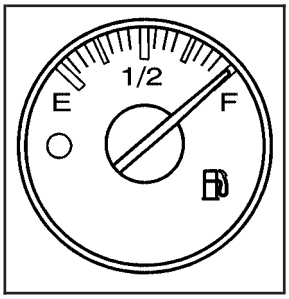

United States

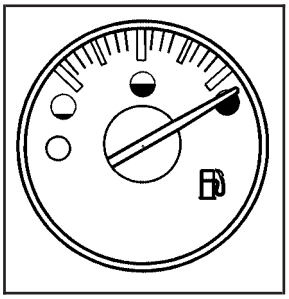

Canada

When the ignition is on, the fuel gage tells you about how much fuel you have left in your tank.

The gage will first indicate empty before you are out of fuel, and you should get more fuel as soon as possible.

When the fuel tank is low the FUEL LEVEL LOW message will appear. See *DIC Warnings and Messages on page 3-54* for more information.

Here are some situations you may experience with your fuel gage. None of these indicate a problem with the fuel gage.

- At the gas station, the fuel pump shuts off before the gage reads full.
- It takes a little more or less fuel to fill up than the fuel gage indicated. For example, the gage may have indicated the tank was half full, but it actually took a little more or less than half the tank's capacity to fill the tank.
- The gage goes back to empty when you turn off the ignition.

If you have a diesel engine, see "Fuel Gage" in the Diesel Engine Supplement.

Low Fuel Warning Light

The light next to the fuel gage will come on briefly when you are starting the engine.

This light comes on when the fuel tank is low on fuel. To turn it off, add fuel to the fuel tank. See *Fuel on page 5-6*.

Driver Information Center (DIC)

The Driver Information Center (DIC) display is located on the instrument panel cluster, below the speedometer. The DIC buttons, if equipped, are located on the steering wheel. The DIC can display information such as the trip odometer, fuel economy, customization features and warning/status messages.

If your vehicle is not equipped with the DIC steering wheel buttons, you will not have all of the features listed. You will scroll through the odometer, trip odometer and engine hours by pressing the trip odometer reset stem located on the instrument panel cluster. You will also turn off, or acknowledge, DIC messages by pressing the trip odometer reset stem. See *Speedometer and Odometer on page 3-33* for information on features for vehicles without DIC buttons.

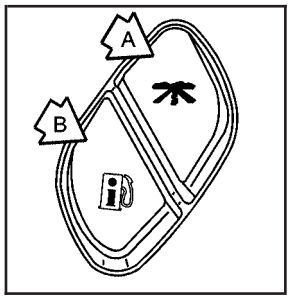

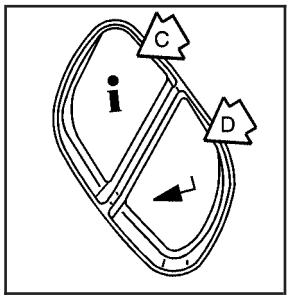

A (Trip Information): Press this button to display the odometer, trip odometers, tire pressure for vehicles equipped with a tire pressure monitor, timer and engine hours.

B (Fuel Information): Press this button to display the current range, fuel used, average fuel economy and engine oil life.

C i (Customization): Press this button to access the vehicle settings menu and customize the personal settings on your vehicle.

D (Select): Press this button to reset certain DIC functions and set your customization settings.

Pressing any of the four DIC buttons will acknowledge DIC messages and clear them from the DIC display.

DIC Operation and Displays

The Driver Information Center (DIC) comes on when the ignition is on. After a short delay, the DIC will display the information that was last displayed before the engine was turned off.

The DIC has different modes which can be accessed by pressing the four DIC buttons located on the steering wheel. These buttons are trip information, fuel information, customization and select. The button functions are detailed in the following pages.

Trip Information Button

(Trip Information): Press the trip information button to scroll through the ODOMETER, TRIP A, TRIP B, TIMER and ENGINE HOURS.

Odometer: Press the trip information button until ODOMETER appears on the display. This mode shows the total distance the vehicle has been driven in either miles or kilometers. Pressing the reset stem located on the instrument cluster with the vehicle off will also display the odometer.

Trip A: Press the trip information button until TRIP A appears on the display. This mode shows the current distance traveled since the last reset for TRIP A in either miles or kilometers.

Trip B: Press the trip information button until TRIP B appears on the display. This mode shows the current distance traveled since the last reset for TRIP B in either miles or kilometers.

To reset TRIP A or TRIP B information, press and hold the select button for one second while in one of the trip modes. This will reset the information for TRIP A or TRIP B.

You can also reset TRIP A or TRIP B while they are displayed by pressing the reset stem on the cluster. If you press and hold the reset stem or the select button for four seconds, the display will show the distance traveled since the last ignition cycle for TRIP A or TRIP B.

Timer: The DIC can be used as a timer. Press the select button while TIMER is displayed to start the timer. The display will show the amount of time that has passed since the timer was last reset, not including time the ignition is off. Time will continue to be counted as long as the ignition is on, even if another display is being shown on the DIC. The timer will record up to 99 hours, 59 minutes and 59 seconds (99:59:59) after which the display will roll back to zero.

To stop the counting of time, press the select button briefly while TIMER is displayed.

To reset the timer to zero, press and hold the select button while TIMER is displayed.

Engine Hours: Press the trip information button until ENGINE HOURS appears on the display. This mode shows the total number of hours the engine has run. Pressing and holding the reset stem located on the instrument cluster for about four seconds will also display the engine hour information after the odometer is displayed when the vehicle is off.

Fuel Information Button

(Fuel Information): Press the fuel information button to scroll through the range, fuel used, average fuel economy and the engine oil life system.

Fuel Range: Press the fuel information button until RANGE appears on the display. This mode shows the remaining distance you can drive without refueling. It is based on fuel economy and the fuel remaining in the tank. The display will show LOW if the fuel level is low.

The fuel economy data used to determine fuel range is an average of recent driving conditions. As your driving conditions change, this data is gradually updated. Fuel range cannot be reset.

Fuel Used: Press the fuel information button until FUEL USED appears on the display. This mode shows the number of gallons or liters of fuel used since the last reset of this menu item. To reset the fuel used information, press and hold the select button for one second while FUEL USED is displayed.

Average Fuel Economy: Press the fuel information button until AVG ECON appears on the display. This mode shows how many miles per gallon (MPG) or liters per 100 kilometers (L/100 km) your vehicle is getting based on current and past driving conditions.

Press and hold the select button for one second while AVG ECON is displayed to reset the average fuel economy. Average fuel economy will then be calculated starting from that point. If the average fuel economy is not reset, it will be continually updated each time you drive.

Engine Oil Life System: Press the fuel information button until ENGINE OIL LIFE appears on the display. The engine oil life system shows an estimate of the oil's remaining useful life. It will show 100% when the system is reset after an oil change. It will alert you to change your oil on a schedule consistent with your driving conditions.

Always reset the engine oil life system after an oil change. To reset the engine oil life system, use the fuel button to reach the ENGINE OIL LIFE screen and then press and hold the select button for five seconds while ENGINE OIL LIFE is displayed. OIL LIFE RESET will appear on the display for 10 seconds to let you know the system is reset. See *Engine Oil Life System (Gasoline Engine) on page 5-23* for more information.

In addition to the engine oil life system monitoring the oil life, additional maintenance is recommended in the Maintenance Schedule in this manual. See *Engine Oil (Gasoline Engine) on page 5-20* and *Scheduled Maintenance on page 6-4*.

Customization Button

i (Customization): Press the customization button to access the VEHICLE SETTINGS menu and customize the settings to your vehicle. See *DIC Vehicle Customization on page 3-63* for more information.

Select Button

◄┘ (Select): Press the select button to reset certain DIC functions and set your customization settings. For example, this button will reset the trip odometers and scroll through the languages in which you can select the DIC to display information.

DIC Warnings and Messages

Warning messages are displayed on the Driver Information Center (DIC) to notify the driver that the status of the vehicle has changed and that some action may be needed by the driver to correct the condition. If there is more than one message that needs to be displayed, they will appear one after another. Some messages may not require immediate action, but you should press any of the four DIC buttons on the steering wheel, if equipped, to acknowledge that you received the messages and clear them from the display. If your vehicle is not equipped with DIC buttons on the steering wheel, press the trip odometer reset stem located on the instrument panel cluster to acknowledge messages and clear them from the display.

Some messages cannot be cleared from the display because they are more urgent. These messages require action before they can be removed from the DIC display. You should take any messages that appear on the display seriously and remember that clearing the messages will only make the messages disappear, not correct the problem.

The following are the possible messages that can be displayed and some information about them.

BATTERY NOT CHARGING

On some vehicles, if the battery is not charging during operation, this message will appear on the DIC. Driving with this problem could drain your battery. Have the electrical system checked by your GM dealer as soon as possible. Pressing any of the four DIC buttons, if equipped, will acknowledge the message and clear it from the DIC display. If your vehicle is not equipped with the four DIC buttons, pressing the trip odometer reset stem will acknowledge the message and clear it from the DIC display. See *Battery Warning Light on page 3-38* and *Voltmeter Gage on page 3-38*.

BUCKLE PASSENGER

If your vehicle is equipped with the passenger sensing system, this message reminds you to buckle the passenger's seat belt. See *Passenger Sensing System on page 1-76*.

This message will display and a chime will sound when the ignition is on, the driver's seat belt is buckled, the passenger's seat belt is unbuckled with the passenger airbag enabled and the vehicle is in motion. You should have the passenger buckle their seat belt.

This reminder will be repeated if the ignition is on, the vehicle is in motion, the driver is buckled and the passenger is still unbuckled and the passenger airbag is enabled. If the passenger's seat belt is already buckled, this message and chime will not come on.

Pressing any of the four DIC buttons, if equipped, will acknowledge the message and clear it from the DIC display. If your vehicle is not equipped with the four DIC buttons, pressing the trip odometer reset stem will acknowledge the message and clear it from the DIC display.

BUCKLE SEATBELT

If your vehicle is equipped with the passenger sensing system, this message reminds you to buckle the driver's seat belt. See *Passenger Sensing System on page 1-76*.

This message will display and a chime will sound when the ignition is on, the driver's seat belt is unbuckled and the vehicle is in motion. You should buckle your seat belt.

If the driver remains unbuckled when the ignition is on and the vehicle is in motion, the reminder will be repeated. If the driver's seat belt is already buckled, this message and chime will not come on.

This message is an additional reminder to the Safety Belt Reminder Light in the instrument panel cluster. See *Safety Belt Reminder Light on page 3-33* for more information.

Pressing any of the four DIC buttons, if equipped, will acknowledge the message and clear it from the DIC display. If your vehicle is not equipped with the four DIC buttons, pressing the trip odometer reset stem will acknowledge the message and clear it from the DIC display.

CHARGING SYSTEM FAILURE

On some vehicles, if there is a problem with the generator and battery charging system, this message will appear on the DIC, a chime will sound and the battery warning light on the instrument panel cluster will come on. Driving with this problem could drain your battery. Turn off all unnecessary accessories. Stop and turn off the vehicle as soon as it is safe to do so. Have the electrical system checked by your GM dealer immediately. See *Battery Warning Light on page 3-38* and *Voltmeter Gage on page 3-38* for more information.

CHECK OIL LEVEL

If your vehicle is equipped with an oil level sensor, and the oil level in the vehicle is low, this message will appear on the DIC. Check the oil level and correct it as necessary. You may need to let the vehicle cool or warm up and cycle the ignition to be sure this message will clear. Once the problem is corrected, pressing any of the four DIC buttons, if equipped, will acknowledge the message and clear it from the DIC display. If your vehicle is not equipped with the four DIC buttons, pressing the trip odometer reset stem will acknowledge the message and clear it from the DIC display. See *Engine Oil (Gasoline Engine) on page 5-20* for additional information.

CHECK WASHER FLUID

If the washer fluid level is low, this message will appear on the DIC. See *Windshield Washer Fluid on page 5-48*. Adding washer fluid will clear the message. Pressing any of the four DIC buttons, if equipped, will acknowledge the message and clear it from the DIC display. If your vehicle is not equipped with the four DIC buttons, pressing the trip odometer reset stem will acknowledge the message and clear it from the DIC display.

DRIVER DOOR AJAR

If the driver's door is not fully closed, this message will appear on the display and you will hear a chime. Stop and turn off the vehicle, check the door for obstacles and close the door again. Check to see if the message still appears on the DIC. Pressing any of the four DIC buttons, if equipped, will acknowledge the message and clear it from the DIC display. If your vehicle is not equipped with the four DIC buttons, pressing the trip odometer reset stem will acknowledge the message and clear it from the DIC display.

ENGINE COOLANT HOT

If the cooling system temperature gets hot, this message will appear in the DIC. Stop the vehicle and let the engine idle in PARK (P), or FIRST (1) for manual transmissions, to allow the coolant to reach a safe temperature. This message will clear when the coolant temperature drops to safe operating temperature.

ENGINE OVERHEATED

If the engine cooling system reaches unsafe temperatures for operation, this message will appear in the DIC and you will hear a chime. Stop and turn off the vehicle as soon as it is safe to do so to avoid severe damage. This message will clear when the engine has cooled to a safe operating temperature.

Notice: **If you drive your vehicle while the engine is overheating, severe engine damage may occur. If an overheat warning appears on the instrument panel cluster and/or DIC, stop the vehicle as soon as possible. Do not increase the engine speed above normal idling speed. See *Engine Overheating on page 5-37* for more information.**

FUEL LEVEL LOW

If the fuel level is low, this message will appear on the DIC and you will hear a chime. Refuel as soon as possible. Pressing any of the four DIC buttons, if equipped, will acknowledge the message and clear it from the DIC display. If your vehicle is not equipped with the four DIC buttons, pressing the trip odometer reset stem will acknowledge the message and clear it from the DIC display. See *Fuel Gage on page 3-49* and *Fuel on page 5-6*.

KEYFOB X BATTERY LOW

If a remote keyless entry transmitter battery is low, this message will appear on the DIC. The battery needs to be replaced in the transmitter. See “Battery Replacement” under *Remote Keyless Entry System Operation on page 2-5*. Pressing any of the four DIC buttons, if equipped, will acknowledge the message and clear it from the DIC display. If your vehicle is not equipped with the four DIC buttons, pressing the trip odometer reset stem will acknowledge the message and clear it from the DIC display.

LEFT REAR DOOR AJAR (Crew Cab)

If the driver’s side rear door is not fully closed, this message will appear on the display and you will hear a chime. Stop and turn off the vehicle, check the door for obstacles and close the door again. Check to see if the message still appears on the DIC. Pressing any of the four DIC buttons, if equipped, will acknowledge the message and clear it from the DIC display. If your vehicle is not equipped with the four DIC buttons, pressing the trip odometer reset stem will acknowledge the message and clear it from the DIC display.

LOW COOLANT LEVEL

If your vehicle is equipped with a low coolant level sensor, this message will appear on the DIC if the engine coolant level is low. Adding coolant will clear the message. See *Cooling System on page 5-40*. Pressing any of the four DIC buttons, if equipped, will acknowledge the message and clear it from the DIC display. If your vehicle is not equipped with the four DIC buttons, pressing the trip odometer reset stem will acknowledge the message and clear it from the DIC display.

Notice: **Engine damage from running your engine without coolant is not covered by your warranty. See "Overheated Engine Protection Operating Mode" in the Index for information on driving to a safe place in an emergency.**

OIL LIFE RESET

This message will appear on the display for about 10 seconds after resetting the change engine oil message. See "Engine Oil Life System" under *DIC Operation and Displays on page 3-51* and *Engine Oil (Gasoline Engine) on page 5-20* for more information.

OIL PRESSURE LOW

If low oil pressure levels occur, this message will be displayed on the DIC and a chime will sound. Stop the vehicle as soon as safely possible and do not operate it until the cause of the low oil pressure has been corrected. Check your oil as soon as possible and have your vehicle serviced by your GM dealer. See *Engine Oil (Gasoline Engine) on page 5-20*.

Notice: **If you drive your vehicle while the engine oil pressure is low, severe engine damage may occur. If a low oil pressure warning appears on the Driver Information Center (DIC), stop the vehicle as soon as possible. Do not drive the vehicle until the cause of the low oil pressure is corrected. See *Engine Oil (Gasoline Engine) on page 5-20* for more information.**

PASSENGER DOOR AJAR

If the passenger's door is not fully closed, this message will appear on the display and you will hear a chime. Stop and turn off the vehicle, check the door for obstacles and close the door again. Check to see if the message still appears on the DIC. Pressing any of the four DIC buttons, if equipped, will acknowledge the message and clear it from the DIC display. If your vehicle is not equipped with the four DIC buttons, pressing the trip odometer reset stem will acknowledge the message and clear it from the DIC display.

RANGE SHIFT INHIBITED (Allison Transmission® Only)

If the transmission is unable to shift into a selected gear, this message will appear on the DIC. The electronic shift position indicator on the instrument panel cluster may blink when this occurs. To make the vehicle shift to the requested gear, you may have to shift back to PARK (P) or NEUTRAL (N) and re-select the desired gear.

REDUCED ENGINE POWER

This message is displayed when the cooling system temperature gets too hot and the engine further enters the engine coolant protection mode.

See *Engine Overheating on page 5-37* for additional information.

RIGHT REAR DOOR AJAR (Crew Cab)

If the passenger's side rear door is not fully closed, this message will appear on the display and you will hear a chime. Stop and turn off the vehicle, check the door for obstacles and close the door again. Check to see if the message still appears on the DIC.

Pressing any of the four DIC buttons, if equipped, will acknowledge the message and clear it from the DIC display. If your vehicle is not equipped with the four DIC buttons, pressing the trip odometer reset stem will acknowledge the message and clear it from the DIC display.

SERVICE 4WD

If a problem occurs with the four-wheel-drive system, this message will appear on the DIC. If this message appears, stop as soon as possible and turn off the vehicle. Restart the vehicle and check for the message on the DIC display. If the message is still displayed or appears again when you begin driving, the four-wheel-drive system needs service. See your GM dealer.

SERVICE 4 WHEEL STEER

If a problem occurs with the four-wheel steer system, this message will appear on the DIC. If this message appears, stop as soon as possible and turn off the vehicle. Restart the vehicle and check for the message on the DIC display. If the message is still displayed or appears again when you begin driving, the four-wheel steer system needs service. See your GM dealer. See *QUADRASTEER™ on page 4-14* for more information.

SERVICE AIRBAG

If there is a problem with the airbag system, this message will be displayed on the DIC. Have your GM dealer inspect the system for problems. See *Airbag Readiness Light on page 3-34* and *Airbag System on page 1-66* for more information. Pressing any of the four DIC buttons, if equipped, will acknowledge the message and clear it from the DIC display. If your vehicle is not equipped with the four DIC buttons, pressing the trip odometer reset stem will acknowledge the message and clear it from the DIC display.

SERVICE BRAKE BOOSTER

If your vehicle has vacuum assist power brakes, this message will be displayed on the DIC when there is a problem with the Supplemental Brake Assist system. If the message is displayed immediately after starting the vehicle or the message appears while driving, your Supplemental Brake Assist system needs service. See your GM dealer. See *Brake System Warning Light on page 3-39* for additional information.

⚠ CAUTION:

Your brake system may not be working properly if the SERVICE BRAKE BOOSTER message is displayed.

If the brake system warning light is also on, you should have the vehicle towed for service. See *Brake System Warning Light on page 3-39*.

If the brake system warning light is not on, you still have brakes, but the supplemental brake assist system on vehicles with rear disc brakes may not operate properly. In the event of a vacuum loss, you may not have vacuum power assist for braking. The brake pedal will be harder to push and it will take longer to stop. If you continue to drive with this message displayed it can lead to a crash. Have the brake system serviced as soon as possible.

SERVICE BRAKE SYSTEM

If there is a problem with the brake system, this message will be displayed on the DIC. If this message appears, stop as soon as possible and turn off the vehicle. Restart the vehicle and check for the message on the DIC display. If the message is still displayed or appears again when you begin driving, the brake system needs service. See your GM dealer.

SERVICE CHARGING SYSTEM

On some vehicles, if there is a problem with the battery charging system, this message will appear on the DIC. Under certain conditions, the battery warning light may also turn on in the instrument panel cluster. See *Battery Warning Light on page 3-38*. The battery will not be charging at an optimal rate and the vehicle will lose the ability to enter the fuel economy mode. The vehicle is safe to drive, however you should have the electrical system checked by your GM dealer. Pressing any of the four DIC buttons, if equipped, will acknowledge the message and clear it from the DIC display. If your vehicle is not equipped with the four DIC buttons, pressing the trip odometer reset stem will acknowledge the message and clear it from the DIC display.

SERVICE RIDE CONTROL

If a problem occurs with the suspension system, this message will appear on the DIC. If this message appears, stop and turn off the vehicle. Restart the vehicle and check for the message on the DIC display. If the message is still displayed or appears again when you begin driving, the air suspension system needs service. See your GM dealer.

TIGHTEN FUEL CAP

If the vehicle's fuel cap is not tightened properly, this message may appear along with the check engine light on the instrument panel. See *Malfunction Indicator Lamp on page 3-44*. Fully reinstall the fuel cap. See *Filling Your Tank on page 5-10*. The diagnostic system can determine if the fuel cap has been left off or improperly installed. A loose or missing fuel cap will allow fuel to evaporate into the atmosphere. A few driving trips with the cap properly installed should turn the light and message off.

TRACTION ACTIVE

When the traction control system had detected that any of the vehicle's wheels are slipping, the traction control system will activate and this message will appear on the DIC. For more information, see *Traction Assist System (TAS) on page 4-8*.

TRANS HOT IDLE ENGINE

If the transmission fluid in the vehicle gets hot, this message will appear on the DIC and you will hear a chime. The chime will stop when the transmission fluid temperature is less that 265°F (129°C). Driving with the transmission fluid temperature high can cause damage to the vehicle. Stop the vehicle and let it idle to allow the transmission to cool. This message will clear when the fluid temperature reaches a safe level. See *Transmission Temperature Gage on page 3-43*.

Notice: **If you drive your vehicle while the transmission fluid is overheating and the transmission temperature warning is displayed on the instrument panel cluster and/or DIC, you can damage the transmission. This could lead to costly repairs that would not be covered by your warranty. Do not drive your vehicle with overheated transmission fluid or while transmission temperature warning is displayed.**

TRANSMISSION HOT

If the transmission fluid temperature becomes high, this message will appear on the DIC display.

When the transmission enters the protection mode, you may notice a change in the transmission shifting patterns. When the transmission fluid temperature returns to normal, the display will turn off and the transmission shifting patterns will return to normal.

Notice: **If you drive your vehicle while the transmission fluid is overheating and the transmission temperature warning is displayed on the instrument panel cluster and/or DIC, you can damage the transmission. This could lead to costly repairs that would not be covered by your warranty. Do not drive your vehicle with overheated transmission fluid or while transmission temperature warning is displayed.**

The following situations can cause the transmission to operate at higher temperatures:

- Towing a trailer
- Hot outside air temperatures
- Hauling a large or heavy load
- Over-loading
- Low transmission fluid level
- High transmission fluid level
- Restricted air flow to the radiator and the auxiliary transmission oil cooler

A temporary solution to hotter transmission operating temperatures may be to let the transmission cool down. If the transmission is operated at higher temperatures on a frequent basis, see *Scheduled Maintenance on page 6-4* for the proper transmission maintenance intervals. Also see *Transmission Temperature Gage on page 3-43* for more information.

TURN SIGNAL ON

If a turn signal is left on for 3/4 of a mile (1.2 km), this message will appear on the display and you will hear a chime. Move the turn signal/multifunction lever to the off position. Pressing any of the four DIC buttons, if equipped, will acknowledge the message and clear it from the DIC display. If your vehicle is not equipped with the four DIC buttons, pressing the trip odometer reset stem will acknowledge the message and clear it from the DIC display.

DIC Vehicle Customization

Your vehicle may have customization capabilities that allow you to program some features to one setting based on your preference. All of the customizable options listed may not be available on your vehicle. Only the options available will be displayed on your Driver Information Center (DIC).

The default settings for the customization features were set when your vehicle left the factory, but may have been changed from their default state since then.

To change feature preferences, make sure the ignition is on and the vehicle is in PARK (P). Press the customization button to scroll through the available customizable options.

After pressing the customization button, VEHICLE SETTINGS will momentarily display before going to a customization option.

Lock Doors (Automatic Transmission only)

If you have an automatic transmission vehicle, press the customization button until LOCK DOORS appears in the display. To select your preference for automatic locking, press the select button while LOCK DOORS is displayed on the DIC. Pressing the select button will scroll through the following choices:

LOCK DOORS: IN GEAR (default): The doors will lock when the vehicle is shifted out of PARK (P).

LOCK DOORS: WITH SPEED: The doors will lock when the vehicle speed is above 8 mph (13 km/h) for three seconds.

Choose one of the available options and press the customization button while it is displayed on the DIC to select it and move on to the next feature. For more information on automatic door locks, see *Programmable Automatic Door Locks on page 2-10*.

Unlock Doors (Automatic Transmission only)

If you have an automatic transmission vehicle, press the customization button until UNLOCK DOORS appears in the display. To select your preference for automatic unlocking, press the select button while UNLOCK DOORS is displayed on the DIC. Pressing the select button will scroll through the following choices:

UNLOCK DOORS: IN PARK (default): All of the doors will unlock when the vehicle is shifted into PARK (P).

UNLOCK DRIVER: IN PARK: The driver's door will be unlocked when the vehicle is shifted into PARK (P).

UNLOCK DOORS: KEY OUT: All of the doors will unlock when the key is taken out of the ignition.

UNLOCK DOORS: MANUALLY: The doors will not be unlocked automatically.

Choose one of the available options and press the customization button while it is displayed on the DIC to select it and move on to the next feature. For more information on automatic door locks, see *Programmable Automatic Door Locks on page 2-10*.

Door Lock Delay (Crew Cab only)

If your DIC does not have this feature, you still may be able to program the delayed locking feature. See *Delayed Locking on page 2-10* for more information.

When locking the doors with the power lock switch or the keyless entry transmitter and a door is open, the delayed locking feature will delay locking the doors until five seconds after the last door is closed.

Press the customization button until DOOR LOCK DELAY appears in the display. To select your preference for delayed locking, press the select button while DOOR LOCK DELAY is displayed on the DIC. Pressing the select button will scroll through the following choices:

DOOR LOCK DELAY: OFF (default): The doors will lock immediately when pressing the power lock switch or the lock button on the keyless entry transmitter.

DOOR LOCK DELAY: ON: The doors will not lock until five seconds after the last door is closed. You will hear three chimes to signal that the delayed locking feature is in use. You can temporarily override delayed locking by pressing the lock button on the door or keyless entry transmitter a second time.

Choose one of the available options and press the customization button while it is displayed on the DIC to select it and move on to the next feature. For more information on automatic door locks, see *Programmable Automatic Door Locks on page 2-10*.

This feature will not operate if the key is in the ignition.

Lock Feedback

Press the customization button until LOCK FEEDBACK appears in the display. To select your preference for the feedback you receive when locking the vehicle with the remote keyless entry transmitter, press the select button while LOCK FEEDBACK is displayed on the DIC. Pressing the select button will scroll through the following choices:

LOCK FEEDBACK: BOTH (default): The parking lamps will flash each time you press the button with the lock symbol on the remote keyless entry transmitter and the horn will chirp the second time you press the lock button.

LOCK FEEDBACK: LAMPS: The parking lamps will flash each time you press the button with the lock symbol on the remote keyless entry transmitter.

LOCK FEEDBACK: HORN: The horn will chirp the second time you press the button with the lock symbol on the remote keyless entry transmitter.

LOCK FEEDBACK: OFF: There will be no feedback when locking the vehicle.

Choose one of the available options and press the customization button while it is displayed on the DIC to select it and move on to the next feature.

Unlock Feedback

Press the customization button until UNLOCK FEEDBACK appears in the display. To select your preference for the feedback you will receive when unlocking the vehicle with the remote keyless entry transmitter, press the select button while UNLOCK FEEDBACK is displayed on the DIC. Pressing the select button will scroll through the following choices:

UNLOCK FEEDBACK: LAMPS (default): The parking lamps will flash each time you press the button with the unlock symbol on the remote keyless entry transmitter.

UNLOCK FEEDBACK: HORN: The horn will chirp the second time you press the button with the unlock symbol on the remote keyless entry transmitter.

UNLOCK FEEDBACK: BOTH: The parking lamps will flash each time you press the button with the unlock symbol on the remote keyless entry transmitter and the horn will chirp the second time you press the unlock button.

UNLOCK FEEDBACK: OFF: There will be no feedback when unlocking the vehicle.

Choose one of the available options and press the customization button while it is displayed on the DIC to select it and move on to the next feature.

Headlamp Delay

Press the customization button until HEADLAMP DELAY appears in the display. To select your preference for how long the headlamps will stay on when you turn off the vehicle, press the select button while HEADLAMP DELAY is displayed on the DIC. Pressing the select button will scroll through the following choices:

- HEADLAMP DELAY: 10 SEC (default)
- HEADLAMP DELAY: 20 SEC
- HEADLAMP DELAY: 40 SEC
- HEADLAMP DELAY: 1 MIN
- HEADLAMP DELAY: 2 MIN
- HEADLAMP DELAY: 3 MIN
- HEADLAMP DELAY: OFF

The amount of time you choose will be the amount of time that the headlamps stay on after you turn off the vehicle. If you choose off, the headlamps will turn off as soon as you turn off the vehicle.

Choose one of the available options and press the customization button while it is displayed on the DIC to select it and move on to the next feature.

Perimeter Lights

Press the customization button until PERIMETER LIGHTS appears in the display. To select your preference for perimeter lighting, press the select button while PERIMETER LIGHTS is displayed on the DIC. Pressing the select button will scroll through the following choices:

PERIMETER LIGHTS: ON (default): The headlamps and back-up lamps will come on for 40 seconds, if it is dark enough outside, when you unlock the vehicle with the remote keyless entry transmitter.

PERIMETER LIGHTS: OFF: The perimeter lights will not come on when you unlock the vehicle with the remote keyless entry transmitter.

Choose one of the available options and press the customization button while it is displayed on the DIC to select it and move on to the next feature.

Easy Exit Seat

Press the customization button until EASY EXIT SEAT appears in the display. To select your preference for seat position exit, press the select button while EASY EXIT SEAT is displayed on the DIC. Pressing the select button will scroll through the following choices:

EASY EXIT SEAT: OFF (default): No seat exit recall will occur.

EASY EXIT SEAT: ON: The driver's seat will move to the exit position when the key is removed from the ignition.

Choose one of the available options and press the customization button while it is displayed on the DIC to select it and move on to the next feature. For more information on seat position exit, see *Memory Seat on page 2-74*.

Curb View

Press the customization button until CURB VIEW appears in the display. To select your preference for curb view, press the select button while CURB VIEW is displayed on the DIC. Pressing the select button will scroll through the following choices:

CURB VIEW: OFF (default): Neither outside mirror will be tilted down when the vehicle is shifted into REVERSE (R).

CURB VIEW: PASSENGER: The passenger's outside mirror will be tilted down when the vehicle is shifted into REVERSE (R).

CURB VIEW: DRIVER: The driver's outside mirror will be tilted down when the vehicle is shifted into REVERSE (R).

CURB VIEW: BOTH: The driver's and passenger's outside mirror will be tilted down when the vehicle is shifted into REVERSE (R).

Choose one of the available options and press the customization button while it is displayed on the DIC to select it and move on to the next feature. For more information on tilt mirror in reverse, see *Outside Curb View Assist Mirrors on page 2-63*.

Alarm Warning

Press the customization button until ALARM WARNING appears in the display. To select your preference for alarm warning, press the select button while ALARM WARNING is displayed on the DIC. Pressing the select button will scroll through the following choices:

ALARM WARNING: BOTH (default): The headlamps will flash and the horn will chirp when the alarm is active.

ALARM WARNING: OFF: There will be no alarm warning on activation.

ALARM WARNING: HORN: The horn will chirp when the alarm is active.

ALARM WARNING: LAMPS: The headlamps will flash when the alarm is active.

Choose one of the available options and press the customization button while your choice is displayed on the DIC to select it and move on to the next feature. For more information on alarm warning type, see *Content Theft-Deterrent on page 2-19*.

Elevated Idle (DURAMAX™ Diesel Engine only)

The elevated idle feature is available on diesel engine vehicles only. Press the customization button until ELEVATED IDLE appears in the display. To select your preference for elevated idle, press the select button while ELEVATED IDLE is displayed on the DIC. Pressing the select button will scroll through the following choices:

ELEVATED IDLE: OFF (default): The elevated idle/exhaust restrictor feature is turned off. See "Elevated Idle/Exhaust Restrictor" under Starting and Operating Your Vehicle in your DURAMAX™ Diesel supplement.

ELEVATED IDLE: ON: The elevated idle/exhaust restrictor feature is turned on. See "Elevated Idle/Exhaust Restrictor" under Starting and Operating Your Vehicle in your DURAMAX™ Diesel supplement.

Choose one of the available options and press the customization button while your choice is displayed on the DIC to select it and move on to the next feature.

Language

To select your preference for display language, press the select button while LANGUAGE is displayed on the DIC. Pressing the select button will scroll through the following languages:

- ENGLISH
- FRANCAIS (French)
- ESPANOL (Spanish)

Choose one of the available options and press the customization button while it is displayed on the DIC to select it.

If you accidentally choose a language that you do not want or understand, press and hold the customization button and the trip information button at the same time. The DIC will begin scrolling through the languages in their particular language. English will be in English, Francais will be in French and Espanol will be in Spanish. When you see the language that you would like, release both buttons. The DIC will then display the information in the language you chose.

You can also scroll through the different languages by pressing and holding the trip reset stem for four seconds, as long as you are in the odometer mode.

Display Units

Press the customization button until DISPLAY UNITS appears in the display. To select English or metric, press the select button while DISPLAY UNITS is displayed on the DIC. Pressing the select button will scroll through the following choices:

- DISPLAY UNITS: ENGLISH
- DISPLAY UNITS: METRIC

If you choose English, all information will be displayed in English units. For example, distance in miles and fuel economy in miles per gallon.

Choose one of the available options and press the customization button while it is displayed on the DIC to select it and end out of the customizable options.

Audio System(s)

Notice: **Before adding any sound equipment to your vehicle, like a tape player, CB radio, mobile telephone, or two-way radio, make sure that it can be added by checking with your dealer. Also, check federal rules covering mobile radio and telephone units. If sound equipment can be added, it is very important to do it properly. Added sound equipment may interfere with the operation of your vehicle's engine, radio, or other systems, and even damage them. Your vehicle's systems may interfere with the operation of sound equipment that has been added improperly.**

Figure out which audio system is in your vehicle, find out what your audio system can do, and how to operate all of its controls.

Your vehicle may have a feature called Retained Accessory Power (RAP). With RAP, the audio system can be played even after the ignition is turned off. See *Retained Accessory Power (RAP) on page 2-23* for more information.

Setting the Time for Radios without Radio Data Systems (RDS)

Press and hold HR until the correct hour appears on the display. Press and hold MIN until the correct minute appears on the display. There is an initial two-second delay before the clock goes into time-set mode. Display the time with the ignition off, by pressing RCL, HR, or MIN.

Setting the Time for Radios with Radio Data Systems (RDS)

The radio may have a button marked with an H or HR to represent hours and an M or MN to represent minutes.

Press and hold the hour button until the correct hour appears on the display. Press and hold the minute button until the correct minute appears on the display. The time can be set with the ignition on or off.

To synchronize the time with an FM station broadcasting Radio Data System (RDS) information, press and hold the hour and minute buttons at the same time until RDS TIME appears on the display. To accept this time, press and hold the hour and minute buttons, at the same time, for another two seconds. If the time is not available from the station, NO UPDAT will appear on the display.

RDS time is broadcast once a minute. After tuning to an RDS broadcast station, it may take a few minutes for the time to update.

AM-FM Radio

Playing the Radio

PWR (Power): Press this knob to turn the system on and off.

VOL (Volume): Turn this knob to increase or to decrease the volume.

RCL (Recall): Press this knob to switch the display between the radio station frequency and the time. When the ignition is off, press this knob to display the time.

Finding a Station

AM FM: Press this button to switch between FM1, FM2, or AM. The display will show the selection.

TUNE: Turn this knob to select radio stations.

◁ **SEEK** ▷ **:** Press the right or the left arrow to go to the next or to the previous station and stay there.

To scan stations, press and hold either SEEK arrow for two seconds until you hear a beep. The radio will go to a station, play for a few seconds, then go on to the next station. Press either SEEK arrow again to stop scanning.

To scan preset stations, press and hold either SEEK arrow for more than four seconds until you hear two beeps. The radio will go to the first preset station stored on the pushbuttons, play for a few seconds, then go on to the next preset station. Press either SEEK arrow again to stop scanning presets.

The radio will only seek and scan stations with a strong signal that are in the selected band.

Setting Preset Stations

Up to 18 stations (six FM1, six FM2, and six AM) can be programmed on the six numbered pushbuttons, by performing the following steps:

1. Turn the radio on.
2. Press AM FM to select FM1, FM2, or AM.
3. Tune in the desired station.
4. Press and hold one of the six numbered pushbuttons until you hear a beep. Whenever that numbered pushbutton is pressed, the station that was set will return.
5. Repeat the steps for each pushbutton.

Setting the Tone (Bass/Treble)

AUDIO: To adjust bass and treble, press and release AUDIO until BAS or TRE appears on the display. Then press and hold the up or the down arrow to increase or to decrease. If a station is weak or noisy, decrease the treble.

To adjust bass or treble to the middle position, select BAS or TRE. Then press and hold AUDIO for more than two seconds until you hear a beep. B and a zero or T and a zero will appear on the display.

To adjust both tone controls and both speaker controls to the middle position, first end out of audio mode by pressing another button, causing the radio to perform that function or by waiting five seconds for the display to return to time of day. Then press and hold AUDIO for more than two seconds until you hear a beep. CEN will appear on the display.

Adjusting the Speakers (Balance/Fade)

AUDIO: To adjust the balance between the right and the left speakers, press and release AUDIO until BAL appears on the display. Then press and hold the up or the down arrow to move the sound toward the right or the left speakers.

To adjust the fade between the front and the rear speakers, press and release AUDIO until FAD appears on the display. Then press and hold the up or the down arrow to move the sound toward the front or the rear speakers.

To adjust balance or fade to the middle position, select BAL or FAD. Then press and hold AUDIO for more than two seconds until you hear a beep. L (balance) and a zero or F and a zero will appear on the display.

To adjust both tone controls and both speaker controls to the middle position, first end out of audio mode by pressing another button, causing the radio to perform that function or by waiting five seconds for the display to return to time of day. Then press and hold AUDIO for more than two seconds until you hear a beep. CEN will appear on the display.

Fade may not be available if the vehicle is a regular cab model.

Radio Messages

CAL (Calibrated): The audio system has been calibrated for your vehicle from the factory. If CAL appears on the display it means that the radio has not been configured properly for your vehicle and must be returned to your GM dealer for service.

LOC (Locked): This message is displayed when the THEFTLOCK® system has locked up. Take the vehicle to your GM dealer for service.

If any error occurs repeatedly or if an error cannot be corrected, contact your GM dealer.

Radio with CD

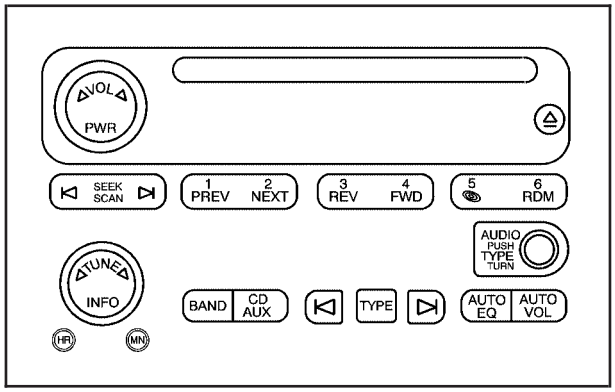

Base Radio Shown, Bose® Similar

If your vehicle has the Bose® audio system, your vehicle will have six Bose® amplified speakers.

Radio Data System (RDS)

The audio system has a Radio Data System (RDS). RDS features are available for use only on FM stations that broadcast RDS information.

With RDS, the radio can do the following:

- Seek to stations broadcasting the selected type of programming
- Receive announcements concerning local and national emergencies
- Display messages from radio stations

This system relies upon receiving specific information from these stations and will only work when the information is available. In rare cases, a radio station may broadcast incorrect information that will cause the radio features to work improperly. If this happens, contact the radio station.

While the radio is tuned to an RDS station, the station name or call letters will appear on the display instead of the frequency. RDS stations may also provide the time of day, a program type (PTY) for current programming, and the name of the program being broadcast.

XM™ Satellite Radio Service

XM™ is a satellite radio service that is based in the 48 contiguous Untied States. XM™ offers 100 coast-to-coast channels including music, news, sports, talk, and children's programming. XM™ provides digital quality audio and text information that includes song title and artist name. A service fee is required in order to receive the XM™ service. For more information, contact XM™ at www.xmradio.com or call 1-800-852-XMXM (9696).

Playing the Radio

PWR (Power): Press this knob to turn the system on and off.

◁ **VOL** ▷ **(Volume):** Turn this knob to increase or to decrease the volume.

INFO (Information): Press this knob to switch the display between the radio station frequency and the time. When the ignition is off, press this knob to display the time.

For RDS, press the INFO knob to change what appears on the display while using RDS. The display options are station name, RDS station frequency, PTY, and the name of the program (if available).

For XM™ (if equipped), press the INFO knob while in XM™ mode to retrieve four different categories of information related to the current song or channel: Artist, Song Title, Category or PTY, Channel Number/Channel Name.

To change the default on the display, press the INFO knob until you see the display you want, then hold the knob until you hear a beep. The selected display will now be the default.

AUTO VOL (Automatic Volume): With automatic volume, the audio system will adjust automatically to make up for road and wind noise as you drive by increasing the volume as vehicle speed increases.

Set the volume at the desired level. Press this button to select LOW, MEDIUM, or HIGH. AVOL will appear on the display. Each higher setting will provide more volume compensation at faster vehicle speeds. To turn automatic volume off, press this button until AVOL OFF appears on the display.

Finding a Station

BAND: Press this button to switch between FM1, FM2, AM, or XM1 or XM2 (if equipped). The display will show the selection.

◁ **TUNE** ▷ **:** Turn this knob to select radio stations.

⊳| **SEEK** |⊲ **:** Press either the SEEK or the TYPE arrows to go to the next or to the previous station and stay there.

The radio will only seek stations with a strong signal that are in the selected band.

⊳| **SCAN** |⊲ **:** Press and hold either the SCAN or the TYPE arrows for two seconds until SCAN appears on the display and you hear a beep. The radio will go to a station, play for a few seconds, then go on to the next station. Press either the SCAN or the TYPE arrows again to stop scanning.

To scan preset stations, press and hold either the SCAN or the TYPE arrows for more than four seconds. PSCN will appear on the display and you will hear a double beep. The radio will go to a preset station, play for a few seconds, then go on to the next preset station. Press either the SCAN or the TYPE arrows again to stop scanning presets.

The radio will only scan stations with a strong signal that are in the selected band.

Setting Preset Stations

Up to 30 stations (six FM1, six FM2, and six AM, six XM1 and six XM2 (if equipped)), can be programed on the six numbered pushbuttons, by performing the following steps:

1. Turn the radio on.
2. Press BAND to select FM1, FM2, AM, or XM1 or XM2.
3. Tune in the desired station.
4. Press and hold one of the six numbered pushbuttons until you hear a beep. Whenever that numbered pushbutton is pressed, the station that was set will return for that pushbutton.
5. Repeat the steps for each pushbutton.

To store an equalization setting to a preset station perform the following:

1. Tune to the preset station.
2. Press and release the AUTO EQ button to select the equalization setting.

   Once the equalization no longer appears on the display, the equalization will be set for that preset station.

Setting the Tone (Bass/Treble)

AUDIO: Push and release the AUDIO knob until BASS or TREB appears on the display. Turn the knob to increase or to decrease. The display will show the bass or treble level. If a station is weak or noisy, decrease the treble.

To adjust the bass and treble to the middle position, push and hold the AUDIO knob. The radio will produce one beep and adjust the display level to the middle position.

To adjust all tone and speaker controls to the middle position, push and hold the AUDIO knob when no tone or speaker control is displayed. ALL CENTERED will appear on the display, you will hear a beep, and the display level will be adjusted to the middle position.

AUTO EQ (Automatic Equalization): Press this button to select customized equalization settings designed for country/western, jazz, talk, pop, rock, and classical. Selecting CUSTOM or changing bass or treble, returns the EQ to the manual bass and treble settings.

The radio will save separate AUTO EQ settings for each preset and source.

If the radio is equipped with the Bose® audio system, the equalization settings are either CUSTOM or TALK.

Adjusting the Speakers (Balance/Fade)

AUDIO: To adjust the balance between the right and the left speakers, push and release the AUDIO knob until BAL appears on the display. Turn the knob to move the sound toward the right or the left speakers.

To adjust the fade between the front and the rear speakers, push and release the AUDIO knob until FADE appears on the display. Turn the knob to move the sound toward the front or the rear speakers.

To adjust the balance and fade to the middle position, push the AUDIO knob, then push it again and hold it until the radio produces one beep. The balance and fade will be adjusted to the middle position and the display will show the speaker balance.

To adjust all tone and speaker controls to the middle position, push and hold the AUDIO knob when no tone or speaker control is displayed. ALL CENTERED will appear on the display, you will hear a beep, and the display level will be adjusted to the middle position.

Finding a Program Type (PTY) Station (RDS and XM™)

To select and find a desired PTY perform the following:

1. Press the TYPE button to activate program type select mode. TYPE and a PTY will appear on the display.
2. Turn the TYPE knob or press and release the TYPE button to select a PTY.
3. Once the desired PTY is displayed, press and release either the TYPE or the SEEK arrows to select and to take you to the PTY's first station.
4. To go to another station within that PTY and the PTY is displayed, press either the TYPE or the SEEK arrows once. If the PTY is not displayed, go back to Step 1.
5. Press either the TYPE or the SEEK arrows to exit program type select mode.

If the radio cannot find the desired program type, NONE will appear on the display and the radio will return to the last station you were listening to.

SCAN: Scan the stations within a PTY by performing the following:

1. Press the TYPE button to activate program type select mode. TYPE and the last selected PTY will appear on the display.
2. Turn the TYPE knob or press and release the TYPE button to select a PTY.
3. Once the desired PTY is displayed, press and hold either the TYPE or the SCAN arrows for two seconds, and the radio will begin scanning the stations in the PTY.
4. Press either the TYPE or the SCAN arrows to stop at a station.

BAND (Alternate Frequency): Alternate frequency allows the radio to switch to a stronger station with the same program type. To turn alternate frequency on, press and hold BAND for two seconds. AF ON will appear on the display. The radio may switch to stations with a stronger frequency.

To turn alternate frequency off, press and hold BAND again for two seconds. AF OFF will appear on the display. The radio will not switch to other stations.

This function does not apply for XM™ Satellite Radio Service.

Setting Preset PTYs (RDS Only)

These buttons have factory PTY presets. Up to 12 PTYs (six FM1 and six FM2), can be programmed on the six numbered pushbuttons, by performing the following steps:

1. Press BAND to select FM1 or FM2.
2. Press the TYPE button to activate program type select mode. TYPE and the last selected PTY will appear on the display.
3. Turn the TYPE knob or press and release the TYPE button to select a PTY.
4. Press and hold one of the six numbered pushbuttons until you hear a beep. Whenever that numbered pushbutton is pressed, the PTY that was set will return.
5. Repeat the steps for each pushbutton.

RDS Messages

INFO (Information): If the current station has a message, the information symbol will appear on the display. Press this button to see the message. The message may display the artist, song title, call in phone numbers, etc.

If the entire message is not displayed, parts of the message will appear every three seconds. To scroll through the message, press and release the INFO button. A new group of words will appear on the display after every press of the button. Once the complete message has been displayed, the information symbol will disappear from the display until another new message is received. The last message can be displayed by pressing the INFO button. You can view the last message until a new message is received or a different station is tuned to.

Radio Messages

CAL ERR (Calibration Error): The audio system has been calibrated for your vehicle from the factory. If CAL ERR appears on the display, it means that the radio has not been configured properly for the vehicle and must be returned to your GM dealer for service.

LOCKED: This message is displayed when the THEFTLOCK® system has locked up. Take the vehicle to your GM dealer for service.

If any error occurs repeatedly, or if an error cannot be corrected, contact your GM dealer.

XM™ Radio Messages

Radio Display Message	Condition	Action Required
XL (Explicit Language Channels)	XL on the radio display, after the channel name, indicates content with explicit language.	These channels, or any others, can be blocked at a customer's request, by calling 1-800-852-XMXM (9696).
Updating	Updating encryption code	The encryption code in the receiver is being updated, and no action is required. This process should take no longer than 30 seconds.
No Signal	Loss of signal	The system is functioning correctly, but the vehicle is in a location that is blocking the XM™ signal. When you move into an open area, the signal should return.
Loading XM	Acquiring channel audio (after 4 second delay)	The audio system is acquiring and processing audio and text data. No action is needed. This message should disappear shortly.
CH Off Air	Channel not in service	This channel is not currently in service. Tune to another channel.
CH Unavail	Channel no longer available	This previously assigned channel is no longer assigned. Tune to another station. If this station was one of the presets, choose another station for that preset button.
No Info	Artist Name/Feature not available	No artist information is available at this time on this channel. The system is working properly.
No Info	Song/Program Title not available	No song title information is available at this time on this channel. The system is working properly.

XM™ Radio Messages (cont'd)

Radio Display Message	Condition	Action Required
No Info	Category Name not available	No category information is available at this time on this channel. The system is working properly.
No Info	No Text/Informational message available	No text or informational messages are available at this time on this channel. The system is working properly.
Not Found	No channel available for the chosen category	There are no channels available for the selected category. The system is working properly.
XM Locked	Theft lock active	The XM™ receiver in the vehicle may have previously been in another vehicle. For security purposes, XM™ receivers cannot be swapped between vehicles. If this message is received after having your vehicle serviced, check with your GM dealer.
Radio ID	Radio ID label (channel 0)	If tuned to channel 0, this message will alternate with the XM™ Radio eight digit radio ID label. This label is needed to activate the service.
Unknown	Radio ID not known (should only be if hardware failure)	If this message is received when tuned to channel 0, there may be a receiver fault. Consult with your GM dealer.
Chk XMRcvr	Hardware failure	If this message does not clear within a short period of time, the receiver may have a fault. Consult with your GM dealer.

Playing a CD

Insert a CD part way into the slot, label side up. The player will pull it in and the CD should begin playing. If you want to insert a CD with the ignition off, first press the eject button or the INFO knob.

If the ignition or radio is turned off with the CD in the player, it will stay in the player. When the ignition or radio is turned on, the CD will start playing where it stopped, if it was the last selected audio source.

When a CD is inserted, the CD symbol will appear on the display. As each new track starts to play, the track number will appear on the display.

The CD player can play the smaller 3 inch (8 cm) single CDs with an adapter ring. Full-size CDs and the smaller CDs are loaded in the same manner.

If playing a CD-R the sound quality may be reduced due to CD-R quality, the method of recording, the quality of the music that has been recorded, and the way the CD-R has been handled. There may be an increase in skipping, difficulty in finding tracks, and/or difficulty in loading and ejecting. If these problems occur try a known good CD.

Do not add paper labels to CDs, they could get caught in the CD player.

If an error appears on the display, see “CD Messages” later in this section.

1 PREV (Previous): Press this pushbutton to go to the beginning of the current track if more than eight seconds have played. TRACK and the track number will appear on the display. If this pushbutton is held or pressed more than once, the player will continue moving backward through the CD.

2 NEXT: Press this pushbutton to go to the next track. TRACK and the track number will appear on the display. If this pushbutton is held or pressed more than once, the player will continue moving forward through the CD.

3 REV (Reverse): Press and hold this pushbutton to quickly reverse within a track. Press and hold this pushbutton for less than two seconds to reverse at six times the normal playing speed. Press and hold it for more than two seconds to reverse at 17 times the normal playing speed. Release this pushbutton to play the passage. ET and the elapsed time of the track will appear on the display.

4 FWD (Forward): Press and hold this pushbutton to quickly advance within a track. Press and hold this pushbutton for less than two seconds to advance at six times the normal playing speed. Press and hold it for more than two seconds to advance at 17 times the normal playing speed. Release this pushbutton to play the passage. ET and the elapsed time of the track will appear on the display.

6 RDM (Random): Press this pushbutton to hear the tracks in random, rather than sequential, order. RDM ON will appear on the display. RDM T and the track number will appear on the display when each track starts to play. Press this pushbutton again to turn off random play. RDM OFF will appear on the display.

⏮ **SEEK** ⏭ **:** Press the left arrow to go to the start of the current or to the previous track. Press the right arrow to go to the start of the next track. If either arrow is held or pressed more than once, the player will continue moving backward or forward through the CD.

⏮ **SCAN** ⏭ **:** Press and hold either the SCAN or the TYPE arrows for more than two seconds until SCAN appears on the display and you hear a beep. The radio will go to the next track, play for 10 seconds, then go on to the next track. Press either the SCAN or the TYPE arrows again, to stop scanning.

INFO (Information): Press this knob to see how long the current track has been playing. ET and the elapsed time will appear on the display. To change the default on the display, track or elapsed time, press the knob until you see the display you want, then hold the knob for two seconds. The radio will produce one beep and the selected display will now be the default.

BAND: Press this button to listen to the radio when a CD is playing. The inactive CD will remain safely inside the radio for future listening.

CD AUX (Auxiliary): Press this button to play a CD when listening to the radio. The inactive CD will remain safely inside the radio for future listening.

⏏ **(Eject):** Press this button to stop a CD when it is playing or to eject a CD when it is not playing. Eject may be activated with either the ignition or radio off. CDs may be loaded with the radio and ignition off if this button is pressed first.

CD Messages

If the CD comes out, it could be for one of the following reasons:

- It is very hot. When the temperature returns to normal, the CD should play.
- You are driving on a very rough road. When the road becomes smoother, the CD should play.
- The CD is dirty, scratched, wet, or upside down.
- The air is very humid. If so, wait about an hour and try again.
- There may have been a problem while burning the CD.
- The label may be caught in the CD player.

If the CD is not playing correctly, for any other reason, try a known good CD.

If any error occurs repeatedly or if an error cannot be corrected, contact your GM dealer. If the radio displays an error message, write it down and provide it to your GM dealer when reporting the problem.

Radio with Cassette and CD

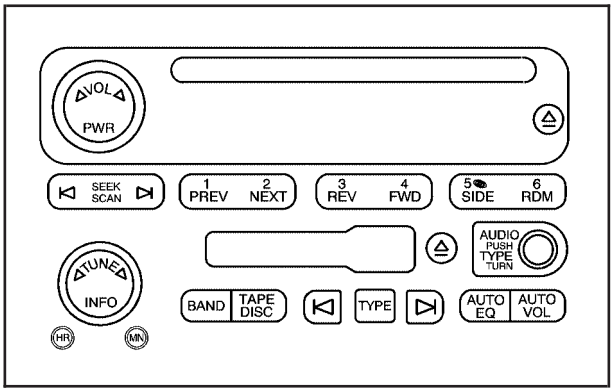

Base Radio Shown, Bose® Similar

If your vehicle has the Bose® audio system, your vehicle will have six Bose® amplified speakers.

Radio Data System (RDS)

The audio system has a Radio Data System (RDS). RDS features are available for use only on FM stations that broadcast RDS information.

With RDS, the radio can do the following:

- Seek to stations broadcasting the selected type of programming
- Receive announcements concerning local and national emergencies
- Display messages from radio stations

This system relies upon receiving specific information from these stations and will only work when the information is available. In rare cases, a radio station may broadcast incorrect information that will cause the radio features to work improperly. If this happens, contact the radio station.

While the radio is tuned to an RDS station, the station name or call letters will appear on the display instead of the frequency. RDS stations may also provide the time of day, a program type (PTY) for current programming, and the name of the program being broadcast.

XM™ Satellite Radio Service

XM™ is a satellite radio service that is based in the 48 contiguous Untied States. XM™ offers 100 coast-to-coast channels including music, news, sports, talk, and children's programming. XM™ provides digital quality audio and text information that includes song title and artist name. A service fee is required in order to receive the XM™ service. For more information, contact XM™ at www.xmradio.com or call 1-800-852-XMXM (9696).

Playing the Radio

PWR (Power): Press this knob to turn the system on and off.

◁ **VOL** ▷ **(Volume):** Turn this knob to increase or to decrease the volume.

INFO (Information): Press this knob to switch the display between the radio station frequency and the time. When the ignition is off, press this knob to display the time.

For RDS, press the INFO knob to change what appears on the display while using RDS. The display options are station name, RDS station frequency, PTY, and the name of the program (if available).

For XM™ (if equipped), press the INFO knob while in XM™ mode to retrieve four different categories of information related to the current song or channel: Artist, Song Title, Category or PTY, Channel Number/Channel Name.

To change the default on the display, press the INFO knob until you see the display you want, then hold the knob until the display flashes. The selected display will now be the default.

AUTO VOL (Automatic Volume): With automatic volume, the audio system will adjust automatically to make up for road and wind noise as you drive by increasing the volume as vehicle speed increases.

Set the volume at the desired level. Press this button to select LOW, MEDIUM, or HIGH. AVOL will appear on the display. Each higher setting will provide more volume compensation at faster vehicle speeds. To turn automatic volume off, press this button until AVOL OFF appears on the display.

Finding a Station

BAND: Press this button to switch between FM1, FM2, AM, or XM1 or XM2 (if equipped). The display will show the selection.

◁ **TUNE** ▷ **:** Turn this knob to select radio stations.

⊳| **SEEK** ⊳| **:** Press either the SEEK or the TYPE arrows to go to the next or to the previous station and stay there.

The radio will only seek stations with a strong signal that are in the selected band.

⊳| **SCAN** ⊳| **:** Press and hold either the SCAN or the TYPE arrows for two seconds until SCAN appears on the display and you hear a beep. The radio will go to a station, play for a few seconds, then go on to the next station. Press either the SCAN or the TYPE arrows again to stop scanning.

To scan preset stations, press and hold either the SCAN or the TYPE arrows for more than four seconds. PSCN will appear on the display and you will hear a double beep. The radio will go to a preset station, play for a few seconds, then go on to the next preset station. Press either the SCAN or the TYPE arrows again to stop scanning presets.

The radio will only scan stations with a strong signal that are in the selected band.

Setting Preset Stations

Up to 30 stations (six FM1, six FM2, and six AM, six XM1 and six XM2 (if equipped)), can be programed on the six numbered pushbuttons, by performing the following steps:

1. Turn the radio on.
2. Press BAND to select FM1, FM2, AM, or XM1 or XM2.
3. Tune in the desired station.
4. Press and hold one of the six numbered pushbuttons until you hear a beep. Whenever that numbered pushbutton is pressed, the station that was set will return for that pushbutton.
5. Repeat the steps for each pushbutton.

To store an equalization setting to a preset station perform the following:

1. Tune to the preset station.
2. Press and release the AUTO EQ button to select the equalization setting.

   Once the equalization no longer appears on the display, the equalization will be set for that preset station.

Setting the Tone (Bass/Treble)

AUDIO: Push and release the AUDIO knob until BASS or TREB appears on the display. Turn the knob to increase or to decrease. The display will show the bass or treble level. If a station is weak or noisy, decrease the treble.

To adjust the bass and treble to the middle position, push and hold the AUDIO knob. The radio will produce one beep and adjust the display level to the middle position.

To adjust all tone and speaker controls to the middle position, push and hold the AUDIO knob when no tone or speaker control is displayed. ALL CENTERED will appear on the display, you will hear a beep, and the display level will be adjusted to the middle position.

AUTO EQ (Automatic Equalization): Press this button to select customized equalization settings designed for country/western, jazz, talk, pop, rock, and classical. Selecting CUSTOM or changing bass or treble, returns the EQ to the manual bass and treble settings.

The radio will save separate AUTO EQ settings for each preset and source.

If the radio is equipped with the Bose® audio system, the equalization settings are either CUSTOM or TALK.

Adjusting the Speakers (Balance/Fade)

AUDIO: To adjust the balance between the right and the left speakers, push and release the AUDIO knob until BAL appears on the display. Turn the knob to move the sound toward the right or the left speakers.

To adjust the fade between the front and the rear speakers, push and release the AUDIO knob until FADE appears on the display. Turn the knob to move the sound toward the front or the rear speakers.

To adjust the balance and fade to the middle position, push the AUDIO knob, then push it again and hold it until the radio produces one beep. The balance and fade will be adjusted to the middle position and the display will show the speaker balance.

To adjust all tone and speaker controls to the middle position, push and hold the AUDIO knob when no tone or speaker control is displayed. ALL CENTERED will appear on the display, you will hear a beep, and the display level will be adjusted to the middle position.

Finding a Program Type (PTY) Station (RDS and XM™)

To select and find a desired PTY perform the following:

1. Press the TYPE button to activate program type select mode. TYPE and a PTY will appear on the display.
2. Turn the TYPE knob or press and release the TYPE button to select a PTY.
3. Once the desired PTY is displayed, press and release either the TYPE or the SEEK arrows to select and to take you to the PTY's first station.
4. To go to another station within that PTY and the PTY is displayed, press either the TYPE or the SEEK arrows once. If the PTY is not displayed, go back to Step 1.
5. Press either the TYPE or the SEEK arrows to exit program type select mode.

If the radio cannot find the desired program type, NONE will appear on the display and the radio will return to the last station you were listening to.

SCAN: Scan the stations within a PTY by performing the following:

1. Press the TYPE button to activate program type select mode. TYPE and the last selected PTY will appear on the display.
2. Turn the TYPE knob or press and release the TYPE button to select a PTY.
3. Once the desired PTY is displayed, press and hold either the TYPE or the SCAN arrows for two seconds, and the radio will begin scanning the stations in the PTY.
4. Press either the TYPE or the SCAN arrows to stop at a station.

BAND (Alternate Frequency): Alternate frequency allows the radio to switch to a stronger station with the same program type. To turn alternate frequency on, press and hold BAND for two seconds. AF ON will appear on the display. The radio may switch to stations with a stronger frequency.

To turn alternate frequency off, press and hold BAND again for two seconds. AF OFF will appear on the display. The radio will not switch to other stations.

This function does not apply for XM™ Satellite Radio Service.

Setting Preset PTYs (RDS Only)

These buttons have factory PTY presets. Up to 12 PTYs (six FM1 and six FM2), can be programmed on the six numbered pushbuttons, by performing the following steps:

1. Press BAND to select FM1 or FM2.
2. Press the TYPE button to activate program type select mode. TYPE and the last selected PTY will appear on the display.
3. Turn the TYPE knob or press and release the TYPE button to select a PTY.
4. Press and hold one of the six numbered pushbuttons until you hear a beep. Whenever that numbered pushbutton is pressed, the PTY that was set will return.
5. Repeat the steps for each pushbutton.

RDS Messages

INFO (Information): If the current station has a message, the information symbol will appear on the display. Press this button to see the message. The message may display the artist, song title, call in phone numbers, etc.

If the entire message is not displayed, parts of the message will appear every three seconds. To scroll through the message, press and release the INFO button. A new group of words will appear on the display after every press of the button. Once the complete message has been displayed, the information symbol will disappear from the display until another new message is received. The last message can be displayed by pressing the INFO button. You can view the last message until a new message is received or a different station is tuned to.

Radio Messages

CAL ERR (Calibration Error): The audio system has been calibrated for your vehicle from the factory. If CAL ERR appears on the display, it means that the radio has not been configured properly for the vehicle and must be returned to your GM dealer for service.

LOCKED: This message is displayed when the THEFTLOCK® system has locked up. Take the vehicle to your GM dealer for service.

If any error occurs repeatedly, or if an error cannot be corrected, contact your GM dealer.

XM™ Radio Messages

Radio Display Message	Condition	Action Required
XL (Explicit Language Channels)	XL on the radio display, after the channel name, indicates content with explicit language.	These channels, or any others, can be blocked at a customer's request, by calling 1-800-852-XMXM (9696).
Updating	Updating encryption code	The encryption code in the receiver is being updated, and no action is required. This process should take no longer than 30 seconds.
No Signal	Loss of signal	The system is functioning correctly, but the vehicle is in a location that is blocking the XM™ signal. When you move into an open area, the signal should return.
Loading XM	Acquiring channel audio (after 4 second delay)	The audio system is acquiring and processing audio and text data. No action is needed. This message should disappear shortly.
CH Off Air	Channel not in service	This channel is not currently in service. Tune to another channel.
CH Unavail	Channel no longer available	This previously assigned channel is no longer assigned. Tune to another station. If this station was one of the presets, choose another station for that preset button.
No Info	Artist Name/Feature not available	No artist information is available at this time on this channel. The system is working properly.
No Info	Song/Program Title not available	No song title information is available at this time on this channel. The system is working properly.

XM™ Radio Messages (cont'd)

Radio Display Message	Condition	Action Required
No Info	Category Name not available	No category information is available at this time on this channel. The system is working properly.
No Info	No Text/Informational message available	No text or informational messages are available at this time on this channel. The system is working properly.
Not Found	No channel available for the chosen category	There are no channels available for the selected category. The system is working properly.
XM Locked	Theft lock active	The XM™ receiver in the vehicle may have previously been in another vehicle. For security purposes, XM™ receivers cannot be swapped between vehicles. If this message is received after having your vehicle serviced, check with your GM dealer.
Radio ID	Radio ID label (channel 0)	If tuned to channel 0, this message will alternate with the XM™ Radio eight digit radio ID label. This label is needed to activate the service.
Unknown	Radio ID not known (should only be if hardware failure)	If this message is received when tuned to channel 0, there may be a receiver fault. Consult with your GM dealer.
Chk XMRcvr	Hardware failure	If this message does not clear within a short period of time, the receiver may have a fault. Consult with your GM dealer.

Playing a Cassette Tape

The tape player is built to work best with tapes that are up to 30 to 45 minutes long on each side. Tapes longer than that are so thin they may not work well in this player. The longer side with the tape visible should face to the right. If you hear nothing or hear a garbled sound, the tape may not be in squarely. Press the eject button to remove the tape and start over.

If the ignition and radio are off, press the eject button or the INFO knob to insert and to begin play of a tape. If the ignition is on and the radio is off, the tape can be inserted and will begin playing.

While the tape is playing, use the VOL, AUDIO, and SEEK controls just as you do for the radio. The cassette tape symbol will appear on the display and an arrow showing which side of the tape is playing. The tape player will play the other side of the tape when it reaches the end.

Cassette tape adapter kits for portable CD players will work in the cassette tape player. See “CD Adapter Kits” later for more information.

The tape bias is set automatically when a metal or chrome tape is inserted.

If an error appears on the display, see “Cassette Tape Messages” later in this section.

1 PREV (Previous): The tape must have at least three seconds of silence between each selection for previous to work. Press this pushbutton to go to the previous selection on the tape if the current selection has been playing for less than three seconds. If pressed when the current selection has been playing from three to 13 seconds, it will go to the beginning of the previous selection or the beginning of the current selection, depending on the position on the tape. If pressed when the current selection has been playing for more than 13 seconds, it will go to the beginning of the current selection.

SEEK and a negative number will appear on the display while the cassette player is in the previous mode. Pressing this pushbutton multiple times will increase the number of selections to be searched back, up to –9.

2 NEXT: The tape must have at least three seconds of silence between each selection for next to work. Press this pushbutton to go to the next selection on the tape. Pressing this pushbutton multiple times, in next mode, will increase the number of selections to be searched forward. SEEK and a positive number will appear on the display.

3 REV (Reverse): Press this pushbutton to quickly reverse the tape. The radio will play while the tape reverses. Press it again to return to playing speed. The station frequency and REV will appear on the display. Select stations during reverse operation by using TUNE and SEEK.

4 FWD (Forward): Press this pushbutton to quickly advance the tape. The radio will play while the tape advances. Press this pushbutton again to return to playing speed. The station frequency and FWD will appear on the display. Select stations during forward operation by using TUNE and SEEK.

5 ⧵ SIDE: Press this pushbutton to play the other side of the tape.

⊲ SEEK ⊳ : The right arrow is the same as the NEXT pushbutton, and the left arrow is the same as the PREV pushbutton. If either arrow is held or pressed more than once, the player will continue moving forward or backward through the tape. SEEK and a positive or negative number will appear on the display.

⊲ SCAN ⊳ : Press and hold either the SCAN or the TYPE arrows for more than two seconds until SCAN appears on the display and you hear a beep. The radio will go to the next selection, play for 10 seconds, then go on to the next selection. Press either the SCAN or the TYPE arrows again, to stop scanning. The tape must have at least three seconds of silence between each selection for scan to work.

BAND: Press this button to listen to the radio when a cassette tape or CD is playing. The inactive tape or CD will remain safely inside the radio for future listening.

TAPE DISC: Press this button to play a cassette tape or CD when listening to the radio. The inactive tape or CD will remain safely inside the radio for future listening.

⏏ (Eject): Press this button to stop a tape when it is playing or to eject a tape when it is not playing. Eject may be activated with the radio off. Cassette tapes may be loaded with the radio off if this button is pressed first.

Cassette Tape Messages

CHK TAPE (Check Tape): If this message appears on the display, the tape will not play due to one of the following errors:

- The tape is tight and the player cannot turn the tape hubs. Remove the tape. Hold the tape with the open end down and try to turn the right hub counterclockwise with a pencil. Turn the tape over and repeat. If the hubs do not turn easily, the tape may be damaged and should not be used in the player. Try a new tape to make sure your player is working properly.
- The tape is broken. Try a new tape.
- The tape is wrapped around the tape head. Attempt to get the cassette out. Try a new tape.

CLEAN: If this message appears on the display, the cassette tape player needs to be cleaned. It will still play tapes, but it should be cleaned as soon as possible to prevent damage to the tapes and player. See *Care of Your Cassette Tape Player on page 3-125*.

If the cassette tape is not playing correctly, for any other reason, try a known good cassette.

If any error occurs repeatedly or if an error cannot be corrected, contact your GM dealer. If the radio displays an error message, write it down and provide it to your GM dealer when reporting the problem.

CD Adapter Kits

It is possible to use a portable CD player with the cassette tape player after activating the bypass feature on your tape player.

To activate the bypass feature, perform the following steps:

1. Turn the ignition on.
2. Turn the radio off.
3. Press and hold the TAPE DISC button for five seconds. READY will appear on the display and the tape symbol on the display will flash, indicating the feature is active.
4. Insert the adapter into the cassette tape slot. It will power up the radio and begin playing.

The override feature will remain active until the eject button is pressed.

Playing a CD

Insert a CD part way into the slot, label side up. The player will pull it in and the CD should begin playing. If you want to insert a CD with the ignition off, first press the eject button or the INFO knob.

If the ignition or radio is turned off with the CD in the player, it will stay in the player. When the ignition or radio is turned on, the CD will start playing where it stopped, if it was the last selected audio source.

When a CD is inserted, the CD symbol will appear on the display. As each new track starts to play, the track number will appear on the display.

The CD player can play the smaller 3 inch (8 cm) single CDs with an adapter ring. Full-size CDs and the smaller CDs are loaded in the same manner.

If playing a CD-R the sound quality may be reduced due to CD-R quality, the method of recording, the quality of the music that has been recorded, and the way the CD-R has been handled. There may be an increase in skipping, difficulty in finding tracks, and/or difficulty in loading and ejecting. If these problems occur try a known good CD.

Do not add paper labels to CDs, they could get caught in the CD player.

If an error appears on the display, see “CD Messages” later in this section.

1 PREV (Previous): Press this pushbutton to go to the beginning of the current track if more than eight seconds have played. TRACK and the track number will appear on the display. If this pushbutton is held or pressed more than once, the player will continue moving backward through the CD.

2 NEXT: Press this pushbutton to go to the next track. TRACK and the track number will appear on the display. If this pushbutton is held or pressed more than once, the player will continue moving forward through the CD.

3 REV (Reverse): Press and hold this pushbutton to quickly reverse within a track. Press and hold this pushbutton for less than two seconds to reverse at six times the normal playing speed. Press and hold it for more than two seconds to reverse at 17 times the normal playing speed. Release this pushbutton to play the passage. ET and the elapsed time of the track will appear on the display.

4 FWD (Forward): Press and hold this pushbutton to quickly advance within a track. Press and hold this pushbutton for less than two seconds to advance at six times the normal playing speed. Press and hold it for more than two seconds to advance at 17 times the normal playing speed. Release this pushbutton to play the passage. ET and the elapsed time of the track will appear on the display.

6 RDM (Random): Press this pushbutton to hear the tracks in random, rather than sequential, order. RDM ON will appear on the display. RDM and the track number will appear on the display when each track starts to play. Press this pushbutton again to turn off random play. RDM OFF will appear on the display.

⏮ **SEEK** ⏭ **:** Press the left arrow to go to the start of the current or to the previous track. Press the right arrow to go to the start of the next track. If either arrow is held or pressed more than once, the player will continue moving backward or forward through the CD.

⏮ **SCAN** ⏭ **:** Press and hold either the SCAN or the TYPE arrows for more than two seconds until SCAN appears on the display and you hear a beep. The radio will go to the next track, play for 10 seconds, then go on to the next track. Press either the SCAN or the TYPE arrows again, to stop scanning.

INFO (Information): Press this knob to see how long the current track has been playing. ET and the elapsed time will appear on the display. To change the default on the display, track or elapsed time, press the knob until you see the display you want, then hold the knob for two seconds. The radio will produce one beep and the selected display will now be the default.

BAND: Press this button to listen to the radio when a cassette tape or CD is playing. The inactive tape or CD will remain safely inside the radio for future listening.

TAPE DISC: Press this button to play a cassette tape or CD when listening to the radio. The inactive tape or CD will remain safely inside the radio for future listening.

⏏ **(Eject):** Press this button to stop a CD when it is playing or to eject a CD when it is not playing. Eject may be activated with either the ignition or radio off. CDs may be loaded with the radio and ignition off if this button is pressed first.

CD Messages

If the CD comes out, it could be for one of the following reasons:

- It is very hot. When the temperature returns to normal, the CD should play.
- You are driving on a very rough road. When the road becomes smoother, the CD should play.
- The CD is dirty, scratched, wet, or upside down.
- The air is very humid. If so, wait about an hour and try again.
- There may have been a problem while burning the CD.
- The label may be caught in the CD player.

If the CD is not playing correctly, for any other reason, try a known good CD.

If any error occurs repeatedly or if an error cannot be corrected, contact your GM dealer. If the radio displays an error message, write it down and provide it to your GM dealer when reporting the problem.

Listening to a DVD

If your vehicle has the Rear Seat Entertainment (RSE) system and a DVD is playing, the DVD symbol will appear on the radio display indicating that the DVD is available and can be listened to through your vehicle's speakers. To listen to the DVD, press the TAPE DISC button until RSE appears on the radio display. The current radio source will stop and the DVD sound will come through the speakers. To stop listening to the DVD, press the TAPE DISC button, if a cassette tape or a CD is loaded, or press the BAND button to select a different source.

When the RSE system is turned off, the DVD symbol will go off of the radio display and RSE OFF will appear on the radio display. The radio will return to the last radio source that you were listening to.

See *Rear Seat Entertainment System on page 3-111* for more information.

Radio with Six-Disc CD

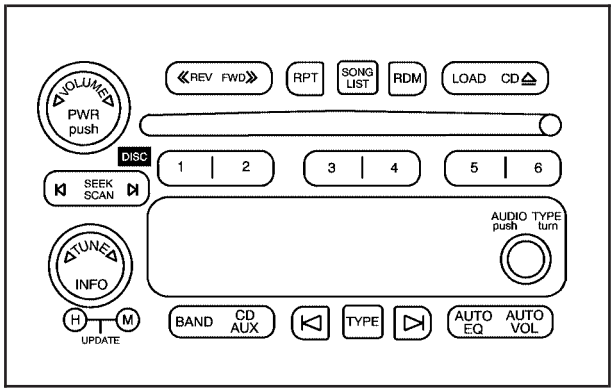

Base Radio Shown, Bose® Similar

If your vehicle has the Bose® audio system, your vehicle will have six Bose® amplified speakers.

Radio Data System (RDS)

The audio system has a Radio Data System (RDS). RDS features are available for use only on FM stations that broadcast RDS information.

With RDS, the radio can do the following:

- Seek to stations broadcasting the selected type of programming
- Receive announcements concerning local and national emergencies
- Display messages from radio stations

This system relies upon receiving specific information from these stations and will only work when the information is available. In rare cases, a radio station may broadcast incorrect information that will cause the radio features to work improperly. If this happens, contact the radio station.

While the radio is tuned to an RDS station, the station name or call letters will appear on the display instead of the frequency. RDS stations may also provide the time of day, a program type (PTY) for current programming, and the name of the program being broadcast.

XM™ Satellite Radio Service

XM™ is a satellite radio service that is based in the 48 contiguous United States. XM™ offers 100 coast-to-coast channels including music, news, sports, talk, and children's programming. XM™ provides digital quality audio and text information that includes song title and artist name. A service fee is required in order to receive the XM™ service. For more information, contact XM™ at www.xmradio.com or call 1-800-852-XMXM (9696).

Playing the Radio

PWR (Power): Push this knob to turn the system on and off.

◁ **VOLUME** ▷ **:** Turn this knob to increase or to decrease the volume.

INFO (Information): Press this knob to switch the display between the radio station frequency and the time. When the ignition is off, press this knob to display the time.

For RDS, press the INFO knob to change what appears on the display while using RDS. The display options are station name, RDS station frequency, PTY, and the name of the program (if available).

For XM™ (if equipped), press the INFO knob while in XM™ mode to retrieve four different categories of information related to the current song or channel: Artist, Song Title, Category or PTY, Channel Number/ Channel Name.

To change the default on the display, press the INFO knob until you see the display you want, then hold the knob until you hear a beep. The selected display will now be the default.

AUTO VOL (Automatic Volume): With automatic volume, the audio system will adjust automatically to make up for road and wind noise as you drive by increasing the volume as vehicle speed increases.

Set the volume at the desired level. Press this button to select MIN, MED, or MAX. AUTO VOL will appear on the display. Each higher setting will provide more volume compensation at faster vehicle speeds. To turn automatic volume off, press this button until AUTO VOL OFF appears on the display.

Finding a Station

BAND: Press this button to switch between FM1, FM2, AM, or XM1 or XM2 (if equipped). The display will show the selection.

◁ **TUNE** ▷ **:** Turn this knob to select radio stations.

⊳| **SEEK** |⊲ **:** Press either the SEEK or the TYPE arrows to go to the next or to the previous station and stay there.

The radio will only seek stations with a strong signal that are in the selected band.

⊳| **SCAN** |⊲ **:** Press and hold either the SCAN or the TYPE arrows for two seconds until SCN appears on the display and you hear a beep. The radio will go to a station, play for a few seconds, then go on to the next station. Press either the SCAN or the TYPE arrows again to stop scanning.

To scan preset stations, press and hold either the SCAN or the TYPE arrows for more than four seconds. PSC will appear on the display and you will hear a double beep. The radio will go to a preset station, play for a few seconds, then go on to the next preset station. Press either the SCAN or the TYPE arrows again to stop scanning presets.

The radio will only scan stations with a strong signal that are in the selected band.

Setting Preset Stations

Up to 30 stations (six FM1, six FM2, and six AM, six XM1 and six XM2 (if equipped)), can be programed on the six numbered pushbuttons, by performing the following steps:

1. Turn the radio on.
2. Press BAND to select FM1, FM2, AM, or XM1 or XM2.
3. Tune in the desired station.
4. Press and hold one of the six numbered pushbuttons until you hear a beep. Whenever that numbered pushbutton is pressed, the station that was set will return for that pushbutton.
5. Repeat the steps for each pushbutton.

To store an equalization setting to a preset station perform the following:

1. Tune to the preset station.
2. Press and release the AUTO EQ button to select the equalization setting.

   Once the equalization no longer appears on the display, the equalization will be set for that preset station.

Setting the Tone (Bass/Treble)

AUDIO: Push and release the AUDIO knob until BASS, MID (without Bose®), or TREB appears on the display. Turn the knob to increase or to decrease. The display will show the bass, midrange (without Bose®), or treble level. If a station is weak or noisy, decrease the treble.

To adjust the bass, midrange (without Bose®), and treble to the middle position, push and hold the AUDIO knob. The radio will produce one beep and adjust the display level to the middle position.

To adjust all tone and speaker controls to the middle position, push and hold the AUDIO knob when no tone or speaker controls are displayed. ALL CENTERED will appear on the display and you will hear a beep.

AUTO EQ (Automatic Equalization): Press this button to select customized equalization settings designed for country/western, jazz, talk, pop, rock, and classical.

The radio will save separate AUTO EQ settings for each preset and source.

If the radio is equipped with the Bose® audio system, the equalization settings are either CUSTOM or TALK.

Adjusting the Speakers (Balance/Fade)

AUDIO: To adjust the balance between the right and the left speakers, push and release the AUDIO knob until BAL appears on the display. Turn the knob to move the sound toward the right or the left speakers.

To adjust the fade between the front and rear speakers, push and release the AUDIO knob until FAD appears on the display. Turn the knob to move the sound toward the front or the rear speakers.

To adjust the balance and fade to the middle position, push and hold the AUDIO knob. The radio will produce one beep and adjust the display level to the middle position.

To adjust all tone and speaker controls to the middle position, push and hold the AUDIO knob when no tone or speaker controls are displayed. ALL CENTERED will appear on the display and you will hear a beep.

Finding a Program Type (PTY) Station (RDS and XM™)

To select and find a desired PTY perform the following:

1. Press the TYPE button to activate program type select mode. P-TYPE and the last selected PTY will appear on the display.
2. Turn the TYPE knob or press and release the TYPE button to select a PTY.
3. Once the desired PTY is displayed, press either the TYPE or the SEEK arrows to select and to take you to the PTY's first station.
4. To go to another station within that PTY and the PTY is displayed, press either the TYPE or the SEEK arrows once. If the PTY is not displayed, go back to Step 1.
5. Press either the TYPE or the SEEK arrows to exit program type select mode.

SCAN: Scan the stations within a PTY by performing the following:

1. Press the TYPE button to activate program type select mode. P-TYPE and the last selected PTY will appear on the display.
2. Turn the TYPE knob or press and release the TYPE button to select a PTY.
3. Once the desired PTY is displayed, press and hold either the TYPE or the SCAN arrows for two seconds, and the radio will begin scanning the stations in the PTY.
4. Press either the TYPE or the SCAN arrows to stop at a station.

BAND (Alternate Frequency): Alternate frequency allows the radio to switch to a stronger station with the same program type. To turn alternate frequency on, press and hold BAND for two seconds. AF ON will appear on the display. The radio may switch to stations with a stronger frequency.

To turn alternate frequency off, press and hold BAND again for two seconds. AF OFF will appear on the display. The radio will not switch to other stations.

This function does not apply for XM™ Satellite Radio Service.

Setting Preset PTYs (RDS Only)

These pushbuttons have factory PTY presets. Up to 12 PTYs (six FM1 and six FM2), can be programmed on the six numbered pushbuttons, by performing the following steps:

1. Press BAND to select FM1 or FM2.
2. Press the TYPE button to activate program type select mode. P-TYPE and the last selected PTY will appear on the display.
3. Turn the TYPE knob or press and release the TYPE button to select a PTY.
4. Press and hold one of the six numbered pushbuttons until you hear a beep. Whenever that numbered pushbutton is pressed, the PTY that was set will return.
5. Repeat the steps for each pushbutton.

RDS Messages

INFO (Information): If the current station has a message, INFO will appear on the display. Press this button to see the message. The message may display the artist, song title, call in phone numbers, etc.

If the entire message is not displayed, parts of the message will appear every three seconds. To scroll through the message, press and release the INFO button. A new group of words will appear on the display after every press of this button. Once the complete message has been displayed, INFO will disappear from the display until another new message is received. The last message can be displayed by pressing the INFO button. You can view the last message until a new message is received or a different station is tuned to.

Radio Messages

CAL ERR (Calibration Error): The audio system has been calibrated for your vehicle from the factory. If CAL ERR appears on the display, it means that the radio has not been configured properly for the vehicle and must be returned to your GM dealer for service.

LOCKED: This message is displayed when the THEFTLOCK® system has locked up. Take the vehicle to your GM dealer for service.

If any error occurs repeatedly, or if an error cannot be corrected, contact your GM dealer.

XM™ Radio Messages

Radio Display Message	Condition	Action Required
XL (Explicit Language Channels)	XL on the radio display, after the channel name, indicates content with explicit language.	These channels, or any others, can be blocked at a customer's request, by calling 1-800-852-XMXM (9696).
Updating	Updating encryption code	The encryption code in the receiver is being updated, and no action is required. This process should take no longer than 30 seconds.
No Signal	Loss of signal	The system is functioning correctly, but the vehicle is in a location that is blocking the XM™ signal. When you move into an open area, the signal should return.
Loading XM	Acquiring channel audio (after 4 second delay)	The audio system is acquiring and processing audio and text data. No action is needed. This message should disappear shortly.
CH Off Air	Channel not in service	This channel is not currently in service. Tune to another channel.
CH Unavail	Channel no longer available	This previously assigned channel is no longer assigned. Tune to another station. If this station was one of the presets, choose another station for that preset button.
No Info	Artist Name/Feature not available	No artist information is available at this time on this channel. The system is working properly.
No Info	Song/Program Title not available	No song title information is available at this time on this channel. The system is working properly.

XM™ Radio Messages (cont'd)

Radio Display Message	Condition	Action Required
No Info	Category Name not available	No category information is available at this time on this channel. The system is working properly.
No Info	No Text/Informational message available	No text or informational messages are available at this time on this channel. The system is working properly.
Not Found	No channel available for the chosen category	There are no channels available for the selected category. The system is working properly.
XM Locked	Theft lock active	The XM™ receiver in the vehicle may have previously been in another vehicle. For security purposes, XM™ receivers cannot be swapped between vehicles. If this message is received after having your vehicle serviced, check with your GM dealer.
Radio ID	Radio ID label (channel 0)	If tuned to channel 0, this message will alternate with the XM™ Radio eight digit radio ID label. This label is needed to activate the service.
Unknown	Radio ID not known (should only be if hardware failure)	If this message is received when tuned to channel 0, there may be a receiver fault. Consult with your GM dealer.
Chk XMRcvr	Hardware failure	If this message does not clear within a short period of time, your receiver may have a fault. Consult with your GM dealer.

Playing a CD

If the ignition or radio is turned off, with a CD in the player, it will stay in the player. When the ignition or radio is turned on, the CD will start playing where it stopped, if it was the last selected audio source.

When a CD is inserted, the CD symbol will appear on the display. As each new track starts to play, the track number will appear on the display.

The CD player can play the smaller 3 inch (8 cm) single CDs with an adapter ring. Full-size CDs and the smaller CDs are loaded in the same manner.

If playing a CD-R the sound quality may be reduced due to CD-R quality, the method of recording, the quality of the music that has been recorded, and the way the CD-R has been handled. There may be an increase in skipping, difficulty in finding tracks, and/or difficulty in loading and ejecting. If these problems occur try a known good CD.

Do not add paper labels to CDs, they could get caught in the CD player.

If an error appears on the display, see “CD Messages” later in this section.

LOAD: Press this button to load CDs into the CD player. This CD player will hold up to six CDs.

To insert one CD, do the following:

1. Turn the ignition on.
2. Press and release the LOAD button.
3. Wait for the indicator light, located to the right of the slot, to turn green.
4. Load a CD. Insert the CD part way into the slot, label side up. The player will pull the CD in.

To insert multiple CDs, do the following:

1. Turn the ignition on.
2. Press and hold the LOAD button for two seconds.

   You will hear a beep and the indicator light, located to the right of the slot, will begin to flash and MULTI LOAD # will appear on the display.
3. Once the light stops flashing and turns green, INSERT CD # will appear on the display, load a CD. Insert the CD part way into the slot, label side up. The player will pull the CD in.

   Once the CD is loaded, the indicator light will begin flashing again. Once the light stops flashing and turns green, you can load another CD. The CD player takes up to six CDs. Do not try to load more than six.

To load more than one CD but less than six, complete Steps 1 through 3. When finished loading CDs, press the LOAD button to cancel the loading function. The radio will begin to play the last CD loaded.

If more than one CD has been loaded, a number for each CD will appear on the display.

Playing a Specific Loaded CD

For every CD loaded, a number will appear on the display. To play a specific CD, first press the CD AUX button, then press the numbered pushbutton that corresponds to the CD. A small bar will appear under the CD number that is playing and the track number will appear on the display.

If an error appears on the display, see “CD Messages” later in this section.

CD ⏏ (Eject): Press this button to eject CD(s).

To eject the CD that is currently playing, press and release this button.

To eject multiple CDs, do the following:

1. Press and hold the CD eject button for five seconds.

   You will hear a beep and the indicator light, located to the right of the slot, will begin to flash and EJECT ALL will appear on the display.

2. Once the light stops flashing and turns green, REMOVE CD # will appear on the display. The CD will eject and can be removed.

   Once the CD is removed, the indicator light will begin flashing again and another CD will eject.

   To stop ejecting the CDs, press the LOAD or the eject button.

If the CD is not removed, after 25 seconds, the CD will be automatically pulled back into the player. If CD is pushed back into the player, before the 25-second time period is complete, the player will sense an error and will try to eject the CD several times before stopping.

Do not repeatedly press the CD eject button to eject a CD after you have tried to push it in manually. The player’s 25-second eject timer will reset at each press of eject, causing the player to not eject the CD until the 25-second time period has elapsed.

≪ **REV (Reverse):** Press and hold this button to reverse quickly within a track. You will hear sound at a reduced volume. Release the button to play the passage. The elapsed time of the track will appear on the display.

FWD ≫ (Forward): Press and hold this button to advance quickly within a track. You will hear sound at a reduced volume. Release the button to play the passage. The elapsed time of the track will appear on the display.

RPT (Repeat): With repeat, one track or an entire CD can be repeated.

To use repeat, do the following:

- To repeat the track you are listening to, press and release the RPT button. RPT will appear on the display. Press RPT again to turn off repeat play.
- To repeat the CD you are listening to, press and hold the RPT button for two seconds. RPT will appear on the display. Press RPT again to turn off repeat play.

RDM (Random): With random, you can listen to the tracks in random, rather than sequential, order, on one CD or on all of the CDs. To use random, do one of the following:

- To play the tracks on the CD you are listening to in random order, press and release the RDM button. RANDOM ONE will appear on the display. Press RDM again to turn off random play.
- To play the tracks on all of the CDs that are loaded in random order, press and hold RDM for more than two seconds. You will hear a beep and RANDOM ALL will appear on the display. Press RDM again to turn off random play.

AUTO EQ (Automatic Equalization): Press AUTO EQ to select the equalization setting while playing a CD. The equalization will be stored whenever a CD is played. For more information on AUTO EQ, see “AUTO EQ” listed previously in this section.

⊲ SEEK ⊳ : Press the left arrow to go to the start of the current track, if more than ten seconds have played. Press the right arrow to go to the next track. If either arrow is held or pressed more than once, the player will continue moving backward or forward through the CD.

⊲ SCAN ⊳ : To scan one CD, press and hold either SCAN arrow for more than two seconds until TRACK SCAN appears on the display and you hear a beep. The radio will go to the next track, play for 10 seconds, then go on to the next track. Press either SCAN arrow again, to stop scanning.

To scan all loaded CDs, press and hold either SCAN arrow for more than four seconds until ALL CD SCAN appears on the display and you hear a beep. Use this feature to listen to 10 seconds of the first track of each loaded CD. Press either SCAN arrow again, to stop scanning.

INFO (Information): Press this knob to see how long the current track has been playing. To change the default on the display, track or elapsed time, press the knob until you see the display you want, then hold the knob until you hear a beep. The selected display will now be the default.

BAND: Press this button to listen to the radio when a CD is playing. The inactive CD(s) will remain safely inside the radio for future listening.

Using Song List Mode

The six-disc CD changer has a feature called song list. This feature is capable of saving 20 track selections.

To save tracks into the song list feature, perform the following steps:

1. Turn the CD player on and load it with at least one CD. See “LOAD CD” listed previously in this section for more information.
2. Check to see that the CD changer is not in song list mode. S-LIST should not appear on the display. If S-LIST is present, press the SONG LIST button to turn it off.
3. Select the desired CD by pressing the numbered pushbutton and then use the SEEK or TYPE right arrow to locate the track to be saved. The track will begin to play.
4. Press and hold the SONG LIST button to save the track into memory. When SONG LIST is pressed, one beep will be heard immediately. After two seconds of continuously pressing the SONG LIST button, two beeps will sound to confirm the track has been saved.
5. Repeat Steps 3 and 4 for saving other selections.

S-LIST FULL will appear on the display if you try to save more than 20 selections.

To play the song list, press the SONG LIST button. One beep will be heard and S-LIST will appear on the display. The recorded tracks will begin to play in the order they were saved.

Seek through the song list by using the SEEK or TYPE arrows. Seeking past the last saved track will return to the first saved track.

To delete tracks from the song list, perform the following steps:

1. Turn the CD player on.
2. Press the SONG LIST button to turn song list on. S-LIST will appear on the display.
3. Press either SEEK or TYPE arrow to select the desired track to be deleted.

4. Press and hold the SONG LIST button for two seconds. When SONG LIST is pressed, one beep will be heard immediately. After two seconds of continuously pressing the SONG LIST button, two beeps will be heard to confirm that the track has been deleted.

After a track has been deleted, the remaining tracks are moved up the list. When another track is added to the song list, the track will be added to the end of the list.

To delete the entire song list, perform the following steps:

1. Turn the CD player on.
2. Press the SONG LIST button to turn song list on. S-LIST will appear on the display.
3. Press and hold the SONG LIST button for more than four seconds. One beep will be heard, followed by two beeps after two seconds, and a final beep will be heard after four seconds. S-LIST EMPTY will appear on the display indicating the song list has been deleted.

If a CD is ejected, and the song list contains saved tracks from that CD, those tracks are automatically deleted from the song list. Any tracks saved to the song list again are added to the bottom of the list.

To end song list mode, press the SONG LIST button. One beep will be heard and S-LIST will be removed from the display.

CD Messages

CHECK CD: If this message appears on the display and/or the CD comes out, it could be for one of the following reasons:

- It is very hot. When the temperature returns to normal, the CD should play.
- You are driving on a very rough road. When the road becomes smoother, the CD should play.
- The CD is dirty, scratched, wet, or upside down.
- The air is very humid. If so, wait about an hour and try again.
- There may have been a problem while burning the CD.
- The label may be caught in the CD player.

If the CD is not playing correctly, for any other reason, try a known good CD.

If any error occurs repeatedly or if an error cannot be corrected, contact your GM dealer. If the radio displays an error message, write it down and provide it to your GM dealer when reporting the problem.

Listening to a DVD

If your vehicle has the Rear Seat Entertainment (RSE) system and a DVD is playing, the DVD symbol will appear on the radio display indicating that the DVD is available and can be listened to through your vehicle's speakers.

To listen to the DVD, press the CD AUX button until RSE appears on the radio display. The current radio source will stop and the DVD sound will come through the speakers.

To stop listening to the DVD, press the CD AUX button, if a CD is loaded, or press the BAND button to select a different source.

When the RSE system is turned off, the DVD symbol will go off of the radio display and RSE OFF will appear on the radio display. The radio will return to the last radio source that you were listening to.

See *Rear Seat Entertainment System on page 3-111* for more information.

Rear Seat Entertainment System

Your vehicle may have a DVD Rear Seat Entertainment (RSE) system. The RSE system includes a DVD player, a video display screen, two sets of wireless headphones, and a remote control.

Parental Control

This button is located behind the video screen. Press this button while a DVD or CD is playing to freeze the video and mute the audio. The video screen will display Parental Control ON and the power indicator light on the DVD player will flash. It will also disable all other button operations from the remote control and the DVD player, with the exception of the eject button. Press this button again to restore operation of the DVD player.

This button may also be used to turn the DVD player power on and automatically resume play if the ignition is in RUN, ACCESSORY, or if RAP is active.

Before You Drive

The RSE system is for rear seat passengers only. The driver cannot safely view the video screen while driving and should not try to do so.

Headphones

The RSE system includes two sets of wireless headphones.

Each set of headphones has an ON/OFF control. An indicator light will illuminate on the headphones when they are on. If the light does not illuminate, the batteries may need to be replaced. See “Battery Replacement” following for more information.

Each set of headphones has a volume knob. To adjust the volume, adjust this knob.

The transmitters are located below the video display screen. The headphones will shut off automatically if they lose the signal from the system after about four minutes to save battery power. The signal may be lost if the system is turned off or if the headphones are out of range of the transmitters.

When using the wired headphones, if the front seat passengers play a CD in the Radio with Six-Disc CD (if equipped) or use XM™ Satellite Radio Service (if equipped), you will hear the audio for these sources, instead of the DVD or CD that is currently playing through the RSE.

Notice: **Do not store the headphones in heat or direct sunlight. This could damage the headphones and repairs would not be covered by your warranty. Keep the headphones stored in a cool, dry place.**

Battery Replacement

To change the batteries, do the following:

1. Loosen the screw on the battery compartment door located on the left side of the headphone earpiece.
2. Replace the two AAA batteries in the compartment. Make sure that they are installed correctly, using the diagram on the inside of the battery compartment.
3. Tighten the screw to close the compartment door.

If the headphones are to be stored for a long period of time, remove the batteries and keep them in a cool, dry place.

Stereo RCA Jacks

The RCA jacks are located behind the video screen. The RCA jacks allow audio and video signals to be connected from an auxiliary device such as a camcorder or a video game unit to the RSE system. Standard RCA cables, not included, are needed to connect the auxiliary device to the RCA jacks. The yellow connector inputs video and the red and white connectors input right and left audio. Refer to the manufacturer’s instructions for proper connection of the auxiliary device.

To use the auxiliary inputs on the RSE system, connect an external auxiliary device to the color-coded RCA jacks and turn both the auxiliary device and the RSE system power on. If the RSE system had been previously in the DVD player mode, pressing the SRCE button on the faceplate or the remote control will switch the RSE system between the auxiliary device and the DVD player.

How to Change the Video Format when in the Auxiliary Mode

The auxiliary input video format is preset to NTSC. In some countries, the video format may be in the PAL system. To change the video format, perform the following:

1. Press the display menu button.
2. Press the down arrow button to highlight the Video Format option.
3. Press the enter button to select Video Format.
4. Press the right or left arrow button to select the desired video format.
5. Press the enter button to accept the change.

Audio Output

Audio from the DVD player or auxiliary inputs may be heard through the following possible sources:

- Wireless Headphones
- Vehicle Speakers
- Vehicle wired headphone jacks on the Rear Seat Audio system (if equipped)

The RSE system will always transmit the audio signal by infrared to the wireless headphones, if there is audio available. See “Headphones” previously for more information.

The RSE system is capable of outputting audio to the vehicle speakers by using the radio. The RSE system may be selected as an audio source on the radio if the RSE system power is on. Once the RSE system is selected as an audio source on the radio, adjust the speaker volume on the radio, if necessary. If the RSE system power is not on, the RSE system will not be an available source on the radio. Refer to the radio information for the radio that your vehicle has for more information.

The RSE system is capable of outputting audio to the wired headphone jacks on the rear seat audio system (if equipped). The RSE system may be selected as an audio source on the rear seat audio system if the RSE system power is on. Refer to *Rear Seat Audio (RSA) on page 3-122* for more information.

Video Screen

The video screen is located in the overhead console. To use the video screen, push forward on the release latch and the screen will fold down. Adjust the screen's position as desired. When the video screen is not in use, push it up into its latched position.

The DVD player and display will continue to operate when the screen is in the up or the down position. The video screen contains the transmitters for the wireless headphones and the remote control. If the screen is in the closed position, the signals will not be available for the operation of the headphones or the remote control.

Notice: **Directly touching the video screen may damage it. Do not touch the screen. See "Cleaning the Video Screen" later in this section for more information.**

DVD Player

The DVD player is located in the overhead console. The DVD player can be controlled by the buttons on the DVD player and/or by the buttons on the remote control. See "Remote Control" later in this section for more information.

The DVD player power may be turned on when the ignition is in RUN, ACCESSORY, or when Retained Accessory Power (RAP) is active.

The RSE system DVD player is only compatible with DVDs of the appropriate region code for the country that the vehicle was sold in. The DVD region code is printed on the jacket of most DVDs.

Standard audio CDs, CD-R, CD-RW, Video CD and Photo CD/CD-R media are fully supported by this DVD player. DVD-R and DVD-RW media is supported if formatted as DVD-Video. DVD+R and DVD+RW media may or may not be supported by the DVD player. The DVD player does not support DVD-RAM, DVD-ROM, and DVD Audio media. An error message will appear on the display if this type of media is inserted into the DVD player.

When using the wired headphones, not included, if the front seat passengers play a CD in the Radio with Six-Disc CD (if equipped) or use XM™ Satellite Radio Service (if equipped), you will hear the audio for these sources, instead of the DVD or CD that is currently playing through the RSE.

If an error message appears on the video screen, see "DVD Messages" later in this section.

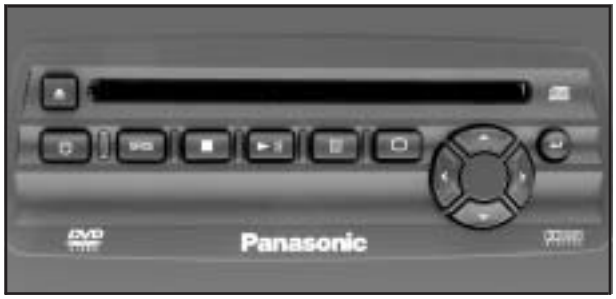

DVD Player Buttons

⏻ **(Power):** Press this button to turn the RSE system on and off. The power indicator light will illuminate when the power is on.

⏏ **(Eject):** Press this button to eject a DVD or CD.

SRCE (Source): Press this button to switch between the DVD player and an auxiliary source.

■ **(Stop):** Press this button to stop playing, rewinding, or fast forwarding a DVD or CD. Press this button twice to return to the beginning of the DVD.

►‖ **(Play/Pause):** Press this button to start play of a DVD or CD. Press this button while a DVD or CD is playing to pause it. Press this button again to continue the play of the DVD or CD.

(Main DVD Menu): Press this button to access the DVD menu. The DVD menu is different on every DVD. Use the up, down, left, and right arrow buttons to move the cursor around the DVD menu. After making a selection press the enter button. This button only operates when playing a DVD.

(Set-up Menu): Press this button to adjust the color, tint, brightness, contrast, display mode, and dynamic range compression. The dynamic range compression feature can be used to reduce loud audio and increase low audio produced by some DVDs.

To change a feature back to the factory default setting, press this button to display the feature, then press and hold this button. The default setting will appear on the display.

While playing an Audio or DVD disc, press and hold this button to display and to remove the track and time information.

▲, ▼, ◄, ► **(Menu Navigation Arrows):** Use the arrow buttons to navigate through a menu.

◄┘ **(Enter):** Press this button to select the choices that are highlighted in any menu.

Playing a Disc

To play a disc, gently insert the disc with the label side up into the loading slot. The DVD player will continue loading the disc and the player will automatically start, if the vehicle is in RUN, ACCESSORY, or when RAP is active.

If a disc is already in the player, press the play/pause button on the DVD player faceplate or on the remote control.

Some DVDs will not allow fast forwarding or skipping of the copyright information or the previews. Some DVDs will begin playing after the previews have finished. If the DVD does not begin to play the main title, refer to the on-screen instructions.

Stopping and Resuming Playback

To stop playing a disc, press and release the stop button on the DVD player faceplate or the remote control.

To resume playback, press the play/pause button on the DVD player faceplate or the remote control. The movie should resume play from where it was last stopped, if the disc has not been ejected and the stop button has not been pressed twice. If the disc has been ejected or if the stop button has been pressed twice, the disc will resume play at the beginning.

Ejecting a Disc

Press the eject button on the DVD player faceplate to eject the disc. There is not an eject button on the remote control.

If a disc is ejected from the player, but is not removed, the DVD player will reload the disc after a short period of time. The disc will be stored in the DVD player. The DVD player will not resume play of the disc automatically.

Remote Control

To use the remote control, aim it at the transmitter window below the video screen and press the desired button. Direct sunlight or very bright light may affect the ability of the RSE system to receive signals from the remote control. If the remote control does not seem to be working, the batteries may need to be replaced. See “Battery Replacement” later in this section.

Objects blocking the line of sight may also affect the function of the remote control.

Notice: **Storing the remote control in a hot area or in direct sunlight may damage it, and the repairs would not be covered by your warranty. Keep the remote control stored in a cool, dry place.**

To extend the life of the batteries, the remote control does not have a press and hold feature.

Remote Control Buttons

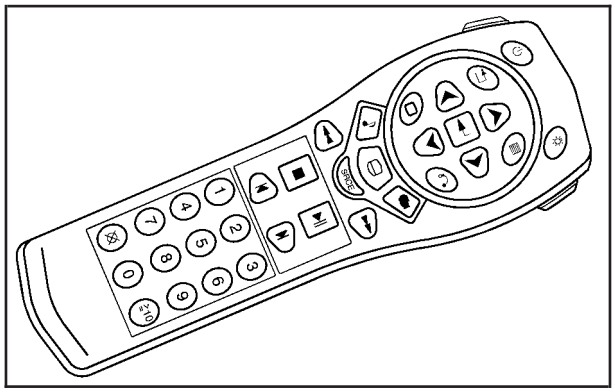

(Power): Press this button to turn the DVD player on and off.

(Title): Press this button to return the DVD to the main menu of the DVD.

▲, ▼, ◀, ▶ (Menu Navigation Arrows): Use the arrow buttons to navigate through a menu.

(Set-up Menu): Press this button to adjust the color, tint, brightness, contrast, display mode, and dynamic range compression. The dynamic range compression feature can be used to reduce loud audio and increase low audio produced by some DVDs.

(Audio): Press this button to display a menu that will only appear when a DVD is being played. The format and content of this function will vary for each disc.

(Fast Reverse): Press this button to fast reverse the DVD or CD. To stop fast reversing, press this button again. This button may not work when the DVD is playing the copyright information or the previews.

SRCE (Source): Press this button to switch between the DVD player and an auxiliary source.

(Stop): Press this button to stop playing, rewinding, or fast forwarding a DVD or CD. Press this button twice to return to the beginning of the DVD.

(Previous Track/Chapter): Press this button to return to the start of the current track or chapter. Press this button again to return to the previous track or chapter. This button may not work when the DVD is playing the copyright information or the previews.

1 through 0 (Numeric Keypad): The numeric keypad provides you with the capability of direct chapter, title, and track number selection.

≧ **10 (Double Digit Entries):** Press this button to select chapter, title, and track numbers greater than 9. Press this button before inputting the number.

⊗ **(Clear):** Press this button within three seconds after inputting a number to clear the number(s).

☼ **(Illumination):** Press this button to turn the remote control backlight on. The backlight will time out after about 7 to 10 seconds if no other button is pressed while the backlight is on.

▤ **(Main DVD Menu):** Press this button to access the DVD menu. The DVD menu is different on every DVD. Use the up, down, left, and right arrow buttons to move the cursor around the DVD menu. After making a selection press the enter button. This button only operates when playing a DVD.

◄↵ **(Enter):** Press this button to select the choices that are highlighted in any menu.

↶ **(Return):** Press this button to exit the current active menu and return to the previous menu. This button will operate only when a DVD is playing and a menu is active.

(Camera Angle): Press this button to change camera angles on DVDs that have this feature when a DVD is playing. The format and content of this function will vary for each disc.

▭ **(Subtitle):** Press this button to turn on subtitles and to move through subtitle options when a DVD is playing. The format and content of this function will vary for each disc.

▶▶ **(Fast Forward):** Press this button to fast forward the DVD or CD. To stop fast forwarding, press this button again. This button may not work when the DVD is playing the copyright information or the previews.

►‖ **(Play/Pause):** Press this button to start play of a DVD or CD. Press this button while a DVD or CD is playing to pause it. Press this button again to continue the play of the DVD or CD.

When the DVD is playing, press the pause button then press the fast forward button. The DVD will continue playing in a slow play mode. To cancel slow play mode, press the play/pause button.

▶| **(Next Track/Chapter):** Press this button to advance to the beginning of the next track or chapter. This button may not work when the DVD is playing the copyright information or the previews.

Battery Replacement

To change the batteries, do the following:

1. Remove the battery compartment door located on the bottom of the remote control.
2. Replace the two AA batteries in the compartment. Make sure that they are installed correctly, using the diagram on the inside of the battery compartment.
3. Close the battery door securely.

If the remote control is to be stored for a long period of time, remove the batteries and keep them in a cool, dry place.

Problem	Recommended Action
No power.	The ignition might not be in on or accessory. The parental control button might have been turned on. The power indicator light will flash.
Disc will not play.	The system might be off. The parental control button might have been turned on. The power indicator light will flash. The system might be in auxiliary mode. The disc is upside down or is not compatible.
The picture does not fill the screen. There are black borders on the top and bottom or on both sides or it looks stretched out.	Check the display mode settings in the display menu.
The disc was ejected, but it was pulled back into the DVD player.	The disc is being stored in the DVD player. Press the eject button again to eject the disc.
In auxiliary mode, the picture moves or scrolls.	Check the auxiliary input connections at both devices. Change the Video Format to PAL or NTSC. See “Stereo RCA Jacks” previously for how to change the video format.
The language in the audio or on the screen is wrong.	Check the audio or language selection in the main DVD menu.

Problem	Recommended Action
The remote control does not work.	Check to make sure there is no obstruction between the remote control and the transmitter window. Check the batteries to make sure they are not dead or installed incorrectly. The parental control button might have been turned on. The power indicator light will flash.
After stopping the player, I push Play but sometimes the DVD starts where I left off and sometimes at the beginning.	If the stop button was pressed one time, the DVD player will resume playing where the DVD was stopped. If the stop button was pressed two times the DVD player will begin to play from the beginning of the DVD.
The auxiliary source is running but there is no picture or sound.	Check that the DVD player is in the auxiliary source mode. Check the auxiliary input connections at both devices.

Problem	Recommended Action
My disc is stuck in the player. The Load/Eject button does not work.	Turn the DVD power off, then on, then press the load/eject button on the DVD player. Do not attempt to forcibly remove the disc from the DVD player. This could permanently damage the disc and DVD player.
Sometimes the wireless headphone audio cuts out or buzzes.	Check for obstructions, low batteries, reception range, and interference from cellular telephone towers or by using your cellular telephone in the vehicle. Check that the headphones are facing the front of the vehicle.
I lost the remote and/or the headphones.	See your dealer for assistance.
The DVD is playing, but there is no picture or sound.	Check that the DVD player is in DVD mode.

Problem	Recommended Action
The audio/video skips or jumps.	The DVD or CD could be dirty, scratched, or damaged.
The audio from the radio for the Radio with Six-Disc CD and XM™ has taken over the audio from the DVD or CD when using the wired headphones.	The RSE is working correctly. Use the wireless headphones or have the front seat passengers listen to another audio source.

DVD Messages

The following errors may be displayed on the video screen:

Disc Format Error: This message will be displayed if a disc is inserted upside down, if the disc is not readable, or if the format is not compatible with the DVD player.

Load/Eject Error: This message will be displayed if the disc is not properly loaded or ejected.

Disc Play Error: This message will be displayed if the DVD player cannot play the disc. Scratched or damaged discs will cause this error.

Region Code Error: This message will be displayed if the region code of the DVD is not compatible with the region code of the DVD player.

No Disc: This message will be displayed if any of the buttons on the DVD faceplate or remote control are pressed and no disc is present in the DVD player.

DVD Distortion

There may be an experience with audio distortion in the wireless headphones when operating cellular phones, scanners, CB radios, Global Positioning Systems (GPS)*, two-way radios, mobile fax, or walkie talkies.

It may be necessary to turn off the DVD player when operating one of these devices in or near the vehicle.

* Excludes the OnStar® System.

Cleaning the Video Screen

Pour some isopropyl or rubbing alcohol on a clean cloth and gently wipe the video screen. Do not spray directly onto the screen and do not press too hard or too long on the video screen.

Rear Seat Audio (RSA)

This feature allows rear seat passengers to listen to any of the sources: radio, cassette tapes, CDs, or DVDs. However, the rear seat passengers can only control the sources that the front seat passengers are not listening to. For example, rear seat passengers may listen to and control cassette tapes, CDs, or DVDs through the headphones while the driver listens to the radio through the front speakers. The rear seat passengers have control of the volume for each set of headphones.

The front seat audio controls always have priority over the RSA controls. If the front seat passengers switch the source for the main radio to a remote source, the RSA will not be able to control the source. You can operate the rear seat audio when the main radio is off.

(Power): Press this button to turn the system on or off. The rear speakers will be muted when the power is turned on unless your vehicle is equipped with the Bose® audio system.

(Volume): Turn this knob to increase or to decrease the volume. The left knob controls the left headphones and the right knob controls the right headphones.

SRC (Source): Press this button to select a source: radio, cassette tapes, CDs, or DVDs.

▽ **SEEK △:** When listening to FM1, FM2, or AM, press the up or the down arrow to go to the next or to the previous station and stay there. This function is inactive if the front seat passengers are listening to the radio.

When a cassette tape is playing, press the up or the down arrow to go to the next or the previous selection. This function is inactive if the front seat passengers are listening to a cassette tape.

When a CD is playing, press the up arrow to go to the next track on the CD. Press the down arrow to go to the start of the current track if more than eight seconds have played. This function is inactive if the front seat passengers are listening to a CD.

PROG (Program): Press this button to go to the next preset radio station set on the pushbuttons on the main radio. This function is inactive if the front seat passengers are listening to the radio.

When a cassette tape is playing, press this button to go to the other side of the tape. This function is inactive if the front seat passengers are listening to a cassette tape.

When a CD is playing, press this button to go to the beginning of the CD. This function is inactive if the front seat passengers are listening to a CD.

When a CD is playing in the six-disc CD changer, press this button to select the next CD, if multiple CDs are loaded. This function is inactive if the front seat passengers are listening to a CD.

Theft-Deterrent Feature

THEFTLOCK® is designed to discourage theft of your vehicle's radio. The feature works automatically by learning a portion of the Vehicle Identification Number (VIN). If the radio is moved to a different vehicle, it will not operate and LOCKED will appear on the display.

When the radio and vehicle are turned off, the blinking red light indicates that THEFTLOCK® is armed.

With THEFTLOCK® activated, the radio will not operate if stolen.

Audio Steering Wheel Controls

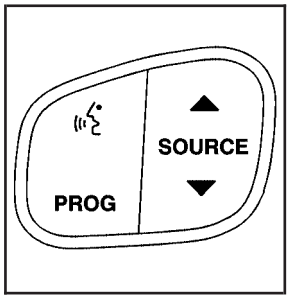

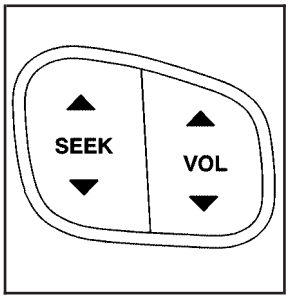

If your vehicle has this feature, some audio controls can be adjusted at the steering wheel. They include the following:

(OnStar/Voice Recognition): If your vehicle has OnStar®, press this button to interact with the OnStar® system. See the OnStar® manual provided with your vehicle for more information.

If your vehicle does not have OnStar®, press this button to silence the system. Press it again, or any other radio button, to turn on the sound.

PROG (Program): Press this button to play a station you have programmed on the radio preset pushbuttons. The radio will only seek preset stations with a strong signal that are in the selected band.

When a cassette tape is playing, press this button to play the other side of the tape.

When a CD is playing in the CD changer, press this button to go to the next available CD, if multiple CDs are loaded.

▲ SOURCE ▼: Press this button to switch between FM1, FM2, AM, or XM1 or XM2 (if equipped), or a cassette tape or CD. The cassette or CD must be loaded to play. Available loaded sources are shown on the display as a tape or a CD symbol.

▲ SEEK ▼: Press the up or the down arrow to go to the next or to the previous radio station and stay there. The radio will only seek stations with a strong signal that are in the selected band.

When a cassette tape or CD is playing, press the up or the down arrow to fast forward or reverse.

▲ VOL▼ (Volume): Press the up or the down arrow to increase or to decrease the volume.

Radio Reception

AM

The range for most AM stations is greater than for FM, especially at night. The longer range can cause station frequencies to interfere with each other. Static can occur on AM stations caused by things like storms and power lines. Try reducing the treble to reduce this noise.

FM Stereo

FM stereo will give the best sound, but FM signals will reach only about 10 to 40 miles (16 to 65 km). Tall buildings or hills can interfere with FM signals, causing the sound to fade in and out.

XM™ Satellite Radio Service

XM™ Satellite Radio Service gives digital radio reception from coast to coast. Just as with FM, tall buildings or hills can interfere with satellite radio signals, causing the sound to fade in and out. The radio may display NO SIGNAL to indicate interference.

Care of Your Cassette Tape Player

A tape player that is not cleaned regularly can cause reduced sound quality, ruined cassettes, or a damaged mechanism. Cassette tapes should be stored in their cases away from contaminants, direct sunlight, and extreme heat. If they are not, they may not operate properly or may cause failure of the tape player.

The tape player should be cleaned regularly after every 50 hours of use. The radio may display CLEAN to indicate that the tape player has been used for 50 hours without resetting the tape clean timer. If this message appears on the display, the cassette tape player needs to be cleaned. It will still play tapes, but it should be cleaned as soon as possible to prevent damage to the tapes and player. If there is a reduction in sound quality, try a known good cassette to see if the tape or the tape player is at fault. If this other cassette has no improvement in sound quality, clean the tape player.

For best results, use a scrubbing action, non-abrasive cleaning cassette with pads which scrub the tape head as the hubs of the cleaner cassette turn. The recommended cleaning cassette is available through your dealer.

When cleaning the cassette tape player with the recommended non-abrasive cleaning cassette, it is possible that the cassette may eject, because the cut tape detection feature on the radio may recognize it as a broken tape, in error. To prevent the cleaning cassette from being ejected, use the following steps:

1. Turn the ignition on.
2. Turn the radio off.
3. Press and hold the TAPE DISC button for five seconds. READY will appear on the display and the cassette symbol will flash for five seconds.
4. Insert the scrubbing action cleaning cassette.
5. Eject the cleaning cassette after the manufacturer's recommended cleaning time.

   When the cleaning cassette has been ejected, the cut tape detection feature will be active again.

A non-scrubbing action, wet-type cleaner which uses a cassette with a fabric belt to clean the tape head can be used. This type of cleaning cassette will not eject on its own. A non-scrubbing action cleaner may not clean as thoroughly as the scrubbing type cleaner. The use of a non-scrubbing action, dry-type cleaning cassette is not recommended.

After the player is cleaned, press and hold the eject button for five seconds to reset the CLEAN indicator. The radio will display --- or CLEANED to show the indicator was reset.

Cassettes are subject to wear and the sound quality may degrade over time. Always make sure the cassette tape is in good condition before the tape player is serviced.

Care of Your CDs and DVDs

Handle discs carefully. Store them in their original cases or other protective cases and away from direct sunlight and dust. If the surface of a disc is soiled, dampen a clean, soft cloth in a mild, neutral detergent solution and clean it, wiping from the center to the edge.

Be sure never to touch the side without writing when handling discs. Pick up discs by grasping the outer edges or the edge of the hole and the outer edge.

Care of Your CD and DVD Player

The use of CD lens cleaners for CDs is not advised, due to the risk of contaminating the lens of the CD optics with lubricants internal to the CD mechanism.

Fixed Mast Antenna

The fixed mast antenna can withstand most car washes without being damaged. If the mast should ever become slightly bent, straighten it out by hand. If the mast is badly bent, replace it.

Check occasionally to make sure the mast is still tightened to the cowl. If tightening is required, tighten by hand, then with a wrench one quarter turn.

XM™ Satellite Radio Antenna System

The XM™ Satellite Radio antenna is located on the roof of your vehicle. Keep this antenna clear of snow and ice build up for clear radio reception.

The performance of the XM™ system may be affected if the sunroof is open.

Loading items onto the roof of your vehicle can interfere with the performance of the XM™ system. Make sure that the XM™ satellite antenna is not obstructed.

Chime Level Adjustment

The radio is the vehicle chime producer. To change the volume level, press and hold pushbutton 6 with the ignition on and the radio power off. The chime volume level will change from the normal level to loud, and LOUD will appear on the radio display. To change back to the default or normal setting, press and hold pushbutton 6 again. The chime level will change from the loud level to normal, and NORMAL will appear on the radio display. Each time the chime volume is changed, three chimes will sound as an example of the new volume selected. Removing the radio and not replacing it with a factory radio or chime module will disable vehicle chimes.

✍ NOTES

Section 4 Driving Your Vehicle

Your Driving, the Road, and Your Vehicle 4-2
Defensive Driving 4-2
Drunken Driving 4-2
Control of a Vehicle 4-5
Braking 4-5
Anti-Lock Brake System (ABS) 4-6
Braking in Emergencies 4-8
Traction Assist System (TAS) 4-8
Manual Selectable Ride 4-10
Locking Rear Axle 4-11
Steering 4-12
QUADRASTEER™ 4-14
Off-Road Recovery 4-17
Passing 4-17
Loss of Control 4-19
Off-Road Driving with Your Four-Wheel-Drive Vehicle 4-20
Driving at Night 4-35
Driving in Rain and on Wet Roads 4-36
City Driving 4-39
Freeway Driving 4-40
Before Leaving on a Long Trip 4-41
Highway Hypnosis 4-42
Hill and Mountain Roads 4-42
Winter Driving 4-44
If You Are Stuck: In Sand, Mud, Ice or Snow 4-48
Rocking Your Vehicle to Get It Out 4-48
Recovery Hooks 4-49
Loading Your Vehicle 4-50
Adding a Snow Plow or Similar Equipment 4-56
Truck-Camper Loading Information 4-60
Pickup Conversion to Chassis Cab 4-62

Towing 4-62
Towing Your Vehicle 4-62
Recreational Vehicle Towing 4-62
Trailer Recommendations 4-67
Towing a Trailer 4-68
Power Take-Off (PTO) 4-98

Your Driving, the Road, and Your Vehicle

Defensive Driving

The best advice anyone can give about driving is: Drive defensively.

Please start with a very important safety device in your vehicle: Buckle up. See *Safety Belts: They Are for Everyone on page 1-11*.

Defensive driving really means “be ready for anything.” On city streets, rural roads, or freeways, it means “always expect the unexpected.”

Assume that pedestrians or other drivers are going to be careless and make mistakes. Anticipate what they might do. Be ready for their mistakes.

Rear-end collisions are about the most preventable of accidents. Yet they are common. Allow enough following distance. It is the best defensive driving maneuver, in both city and rural driving. You never know when the vehicle in front of you is going to brake or turn suddenly.

Defensive driving requires that a driver concentrate on the driving task. Anything that distracts from the driving task — such as concentrating on a cellular telephone call, reading, or reaching for something on the floor — makes proper defensive driving more difficult and can even cause a collision, with resulting injury. Ask a passenger to help do things like this, or pull off the road in a safe place to do them yourself. These simple defensive driving techniques could save your life.

Drunken Driving

Death and injury associated with drinking and driving is a national tragedy. It is the number one contributor to the highway death toll, claiming thousands of victims every year.

Alcohol affects four things that anyone needs to drive a vehicle:

- Judgment
- Muscular Coordination
- Vision
- Attentiveness

Police records show that almost half of all motor vehicle-related deaths involve alcohol. In most cases, these deaths are the result of someone who was drinking and driving. In recent years, more than 16,000 annual motor vehicle-related deaths have been associated with the use of alcohol, with more than 300,000 people injured.

Many adults — by some estimates, nearly half the adult population — choose never to drink alcohol, so they never drive after drinking. For persons under 21, it is against the law in every U.S. state to drink alcohol. There are good medical, psychological and developmental reasons for these laws.

The obvious way to eliminate the leading highway safety problem is for people never to drink alcohol and then drive. But what if people do? How much is “too much” if someone plans to drive? It is a lot less than many might think. Although it depends on each person and situation, here is some general information on the problem.

The Blood Alcohol Concentration (BAC) of someone who is drinking depends upon four things:

- The amount of alcohol consumed
- The drinker’s body weight
- The amount of food that is consumed before and during drinking
- The length of time it has taken the drinker to consume the alcohol

According to the American Medical Association, a 180 lb (82 kg) person who drinks three 12 ounce (355 ml) bottles of beer in an hour will end up with a BAC of about 0.06 percent. The person would reach the same BAC by drinking three 4 ounce (120 ml) glasses of wine or three mixed drinks if each had 1-1/2 ounces (45 ml) of liquors like whiskey, gin, or vodka.

It is the amount of alcohol that counts. For example, if the same person drank three double martinis (3 ounces or 90 ml of liquor each) within an hour, the person’s BAC would be close to 0.12 percent. A person who consumes food just before or during drinking will have a somewhat lower BAC level.

There is a gender difference, too. Women generally have a lower relative percentage of body water than men. Since alcohol is carried in body water, this means that a woman generally will reach a higher BAC level than a man of her same body weight will when each has the same number of drinks.

The law in most U.S. states, and throughout Canada, sets the legal limit at 0.08 percent. In some other countries, the limit is even lower. For example, it is 0.05 percent in both France and Germany. The BAC limit for all commercial drivers in the United States is 0.04 percent.

The BAC will be over 0.10 percent after three to six drinks (in one hour). Of course, as we have seen, it depends on how much alcohol is in the drinks, and how quickly the person drinks them.

But the ability to drive is affected well below a BAC of 0.10 percent. Research shows that the driving skills of many people are impaired at a BAC approaching 0.05 percent, and that the effects are worse at night. All drivers are impaired at BAC levels above 0.05 percent. Statistics show that the chance of being in a collision increases sharply for drivers who have a BAC of 0.05 percent or above. A driver with a BAC level of 0.06 percent has doubled his or her chance of having a collision. At a BAC level of 0.10 percent, the chance of this driver having a collision is 12 times greater; at a level of 0.15 percent, the chance is 25 times greater!

The body takes about an hour to rid itself of the alcohol in one drink. No amount of coffee or number of cold showers will speed that up. “I will be careful” is not the right answer. What if there is an emergency, a need to take sudden action, as when a child darts into the street? A person with even a moderate BAC might not be able to react quickly enough to avoid the collision.

There is something else about drinking and driving that many people do not know. Medical research shows that alcohol in a person’s system can make crash injuries worse, especially injuries to the brain, spinal cord, or heart. This means that when anyone who has been drinking — driver or passenger — is in a crash, that person’s chance of being killed or permanently disabled is higher than if the person had not been drinking.

⚠ CAUTION:

Drinking and then driving is very dangerous. Your reflexes, perceptions, attentiveness, and judgment can be affected by even a small amount of alcohol. You can have a serious — or even fatal — collision if you drive after drinking. Please do not drink and drive or ride with a driver who has been drinking. Ride home in a cab; or if you are with a group, designate a driver who will not drink.

Control of a Vehicle

You have three systems that make your vehicle go where you want it to go. They are the brakes, the steering, and the accelerator. All three systems have to do their work at the places where the tires meet the road.

Sometimes, as when you are driving on snow or ice, it is easy to ask more of those control systems than the tires and road can provide. That means you can lose control of your vehicle. See *Traction Assist System (TAS) on page 4-8*.

Braking

Braking action involves perception time and reaction time.

First, you have to decide to push on the brake pedal. That is perception time. Then you have to bring up your foot and do it. That is reaction time.

Average reaction time is about three-fourths of a second. But that is only an average. It might be less with one driver and as long as two or three seconds or more with another. Age, physical condition, alertness, coordination and eyesight all play a part. So do alcohol, drugs and frustration. But even in three-fourths of a second, a vehicle moving at 60 mph (100 km/h) travels 66 feet (20 m). That could be a lot of distance in an emergency, so keeping enough space between your vehicle and others is important.

And, of course, actual stopping distances vary greatly with the surface of the road (whether it is pavement or gravel); the condition of the road (wet, dry, icy); tire tread; the condition of your brakes; the weight of the vehicle and the amount of brake force applied.

Avoid needless heavy braking. Some people drive in spurts — heavy acceleration followed by heavy braking — rather than keeping pace with traffic. This is a mistake. Your brakes may not have time to cool between hard stops. Your brakes will wear out much faster if you do a lot of heavy braking.
If you keep pace with the traffic and allow realistic following distances, you will eliminate a lot of unnecessary braking. That means better braking and longer brake life.

If your engine ever stops while you are driving, brake normally but do not pump your brakes. If you do, the pedal may get harder to push down. If your engine stops, you will still have some power brake assist. But you will use it when you brake. Once the power assist is used up, it may take longer to stop and the brake pedal will be harder to push.

Anti-Lock Brake System (ABS)

Your vehicle has anti-lock brakes. ABS is an advanced electronic braking system that will help prevent a braking skid.

When you start your engine and begin to drive away, your anti-lock brake system will check itself. You may hear a momentary motor or clicking noise while this test is going on. This is normal.

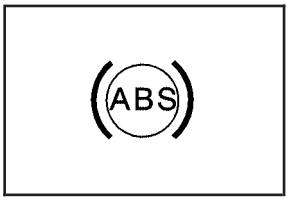

If there is a problem with the anti-lock brake system, this warning light will stay on. See *Anti-Lock Brake System Warning Light on page 3-41*.

Along with ABS, your vehicle has a Dynamic Rear Proportioning (DRP) system. If there is a DRP problem, both the brake and ABS warning lights will come on accompanied by a 10-second chime. The lights and chime will come on each time the ignition is turned on until the problem is repaired. See your dealer for service.

Let us say the road is wet and you are driving safely. Suddenly, an animal jumps out in front of you. You slam on the brakes and continue braking. Here is what happens with ABS:

A computer senses that wheels are slowing down. If one of the wheels is about to stop rolling, the computer will separately work the brakes at each front wheel and at both rear wheels.

The anti-lock system can change the brake pressure faster than any driver could. The computer is programmed to make the most of available tire and road conditions. This can help you steer around the obstacle while braking hard.

As you brake, your computer keeps receiving updates on wheel speed and controls braking pressure accordingly.

Remember: Anti-lock does not change the time you need to get your foot up to the brake pedal or always decrease stopping distance. If you get too close to the vehicle in front of you, you will not have time to apply your brakes if that vehicle suddenly slows or stops. Always leave enough room up ahead to stop, even though you have anti-lock brakes.

Using Anti-Lock

Do not pump the brakes. Just hold the brake pedal down firmly and let anti-lock work for you. You may feel the brakes vibrate, or you may notice some noise, but this is normal.

Braking in Emergencies

With anti-lock, you can steer and brake at the same time. In many emergencies, steering can help you more than even the very best braking.

Traction Assist System (TAS)

Your vehicle may have a Traction Assist System (TAS) that limits wheel spin. This is especially useful in slippery road conditions. The system operates only if it senses that one or both of the rear wheels are spinning or beginning to lose traction. When this happens, the system reduces engine power to limit wheel spin.

The traction control system is enabled every time your vehicle is started. The system will activate if it senses that any of the wheels are spinning or beginning to lose traction.

You may hear or feel the system working or notice a lack of accelerator response, but this is normal.

The Traction Assist System may operate on dry roads under some conditions. When this happens, you may notice a reduction in acceleration. This is normal and doesn't mean there's a problem with your vehicle. Examples of these conditions include a hard acceleration in a turn, an abrupt upshift or downshift of the transmission or driving on rough roads.

If your vehicle is in cruise control when the TAS begins to limit wheel spin, the cruise control will automatically disengage. When road conditions allow you to safely use it again, you may re-engage the cruise control. See *Cruise Control on page 3-10*.

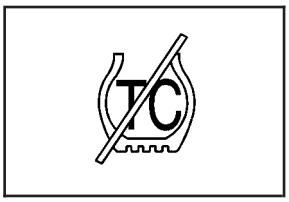

When the traction off light is on, the TAS is off and will not limit wheel spin. Adjust your driving accordingly.

The traction off light will come on under the following conditions:

- The Traction Assist System is turned off, either by pressing the TAS on/off button, located on the instrument panel, or by turning off the automatic engagement feature of the TAS.
- The transmission is in FIRST (1); TAS will not operate in this gear. This is normal.
- The vehicle is driven on an extremely rough road. When the vehicle leaves the rough surface, slows down or stops, the light will go off and TAS will turn on again. This is normal.
- A Traction Assist System, Anti-Lock Brake System or engine-related problem has been detected and the vehicle needs service.
- If the vehicle has been driven with the TAS system on for long periods of time, or if the vehicle has gone through many several high speed braking maneuvers the system may be automatically disabled. The system will automatically re-enable after approximately two minutes of not using the brakes.

See *Traction Off Light on page 3-41*.

The Traction Assist System, as delivered from the factory, will automatically come on whenever you start your vehicle. To limit wheel spin, especially in slippery road conditions, you should always leave the system on. But you can turn the TAS off if you ever need to. You should turn the TAS off if your vehicle ever gets stuck in sand, mud or snow and rocking the vehicle is required. See *Rocking Your Vehicle to Get It Out on page 4-48* and *If You Are Stuck: In Sand, Mud, Ice or Snow on page 4-48*.

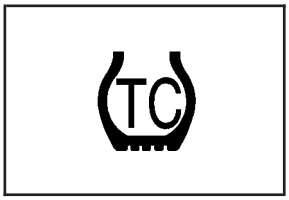

To turn the system on or off press the TAS on/off button located on the instrument panel.

If you used the button to turn the system off, the traction off light will come on and stay on. You can turn the system back on at any time by pressing the button again. The traction off light should go off.

If desired, for a vehicle with QUADRASTEER™, you can change the TAS automatic engagement feature so that the system will not come on automatically when the engine is started. To do so:

1. Park the vehicle with the ignition off and the transmission in PARK (P) for an automatic transmission, or in gear for a manual transmission.
2. Turn the ignition to RUN; do not start the engine.
3. Apply the brake pedal, shift into NEUTRAL (N), press the accelerator pedal to the floor, then press the TAS on/off button and hold it down for at least six seconds.
4. Release the TAS button and both pedals.
5. Turn off the ignition and wait a few seconds.

The next time you start your vehicle, the TAS will not automatically come on. You can restore the automatic feature by repeating the same procedure. Whether the TAS is set to come on automatically or not, you can always turn the system on or off by pressing the TAS on/off button.

Manual Selectable Ride

The main function of this system is to provide superior ride comfort while trailering or fully loaded, as well as for unloaded driving. This system also helps to provide:

- Improved trailering stability
- Improved handling response when trailering or fully loaded

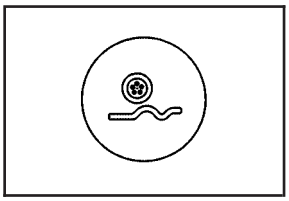

This button is located on the center of the instrument panel near the radio.

Press it to activate the selectable ride setting as desired. An indicator light near the button will illuminate whenever the system is active.

It is recommended to use this system as follows:

- For optimum ride comfort in an unloaded vehicle the button should be out. The indicator light will not be lit. This button position indicates NORMAL levels of ride control or damping.
- For optimum ride comfort when trailering, fully loaded, driving off-road, or when personal preferences demand more control, the button should be pressed in with the indicator light lit. This switch position indicates FIRM levels of ride control or damping.

The following guide can also be used to help determine the best setting.

NORMAL: The indicator light will not be lit when the system is in this setting. Use for normal city and highway driving. This setting provides a smooth, soft ride when the vehicle is unloaded.

FIRM (Unloaded): Press the button to activate this setting, the indicator light will be lit. Use this setting when road conditions or personal preference demand more control. This setting provides more “feel” or response to the road conditions.

FIRM (Loaded): Press the button to activate this setting, the indicator light will be lit. Use this setting to minimize trailer inputs to the vehicle or when the vehicle is fully loaded. This setting is also appropriate for off-road driving.

You can select a setting at any time based on road and trailering conditions to provide the best ride and handling. Select a new setting whenever driving conditions change.

Locking Rear Axle

If your vehicle has this feature, your locking rear axle can give you additional traction on snow, mud, ice, sand or gravel. It works like a standard axle most of the time, but when one of the rear wheels has no traction and the other does, this feature will allow the wheel with traction to move the vehicle.

Steering

Power Steering

If you lose power steering assist because the engine stops or the system is not functioning, you can steer but it will take much more effort.

Steering Tips

Driving on Curves

It is important to take curves at a reasonable speed.

A lot of the “driver lost control” accidents mentioned on the news happen on curves. Here is why:

Experienced driver or beginner, each of us is subject to the same laws of physics when driving on curves. The traction of the tires against the road surface makes it possible for the vehicle to change its path when you turn the front wheels. If there is no traction, inertia will keep the vehicle going in the same direction. If you have ever tried to steer a vehicle on wet ice, you will understand this.

The traction you can get in a curve depends on the condition of your tires and the road surface, the angle at which the curve is banked, and your speed. While you are in a curve, speed is the one factor you can control.

Suppose you are steering through a sharp curve. Then you suddenly accelerate. Both control systems — steering and acceleration — have to do their work where the tires meet the road. Adding the sudden acceleration can demand too much of those places. You can lose control. See *Traction Assist System (TAS) on page 4-8*.

What should you do if this ever happens? Ease up on the accelerator pedal, steer the vehicle the way you want it to go, and slow down.

Speed limit signs near curves warn that you should adjust your speed. Of course, the posted speeds are based on good weather and road conditions. Under less favorable conditions you will want to go slower.

If you need to reduce your speed as you approach a curve, do it before you enter the curve, while your front wheels are straight ahead.

Try to adjust your speed so you can “drive” through the curve. Maintain a reasonable, steady speed. Wait to accelerate until you are out of the curve, and then accelerate gently into the straightaway.

Steering in Emergencies

There are times when steering can be more effective than braking. For example, you come over a hill and find a truck stopped in your lane, or a car suddenly pulls out from nowhere, or a child darts out from between parked cars and stops right in front of you. You can avoid these problems by braking — if you can stop in time. But sometimes you cannot; there is not room. That is the time for evasive action — steering around the problem.

Your vehicle can perform very well in emergencies like these. First apply your brakes.

See *Braking on page 4-5*. It is better to remove as much speed as you can from a possible collision. Then steer around the problem, to the left or right depending on the space available.

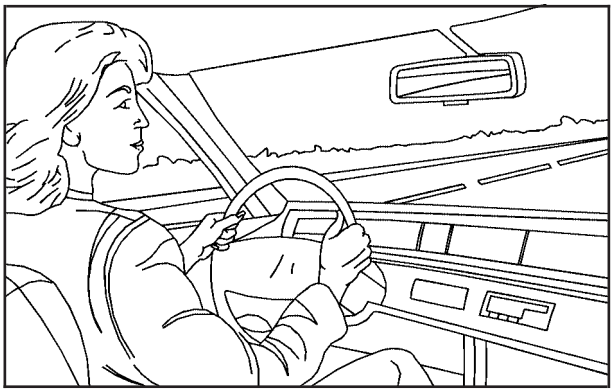

An emergency like this requires close attention and a quick decision. If you are holding the steering wheel at the recommended 9 and 3 o'clock positions, you can turn it a full 180 degrees very quickly without removing either hand. But you have to act fast, steer quickly, and just as quickly straighten the wheel once you have avoided the object.

The fact that such emergency situations are always possible is a good reason to practice defensive driving at all times and wear safety belts properly.

QUADRASTEER™

The QUADRASTEER™ System has a control and diagnostic module that monitors and records current system status and operational information.

If your vehicle is equipped with the 4-Wheel Steer system, it has the ability to steer the vehicle with all four wheels.

Once the 4-Wheel Steer mode is selected, it is recommended to leave the vehicle in this mode at all times, and during all driving and weather conditions.

You can select this mode at any speed, however, if you are turning, the system will not engage until the turn is complete.

The 4-Wheel Steer system is equipped with three different driving modes:

2: Two-wheel steering

4: Four-wheel steering

: Four-wheel steering with a trailer mode

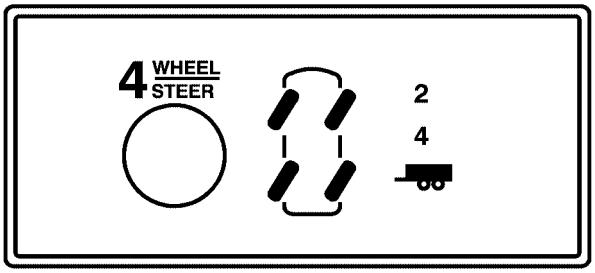

The switch is located on the instrument panel.

2: In this mode, the vehicle will operate like any other vehicle with two-wheel steering. If you want to use 2-wheel steer mode and your vehicle is not in this mode, press the button until the 2 indicator, located to the right of the 4-Wheel Steer button, lights up. If the 2 indicator is flashing, you will have to center the steering wheel by turning it to the left or right.

Your vehicle will return to 2 when the transmission is shifted into NEUTRAL (N), for example when entering a car wash.

If you want to use tire chains, the vehicle needs to be in 2-wheel steer mode. For more information see *Tire Chains on page 5-90*.

4: In this mode, all four wheels will help steer the vehicle. If you want to use 4, and your vehicle is not in this mode, press the button, until the 4 indicator, located to the right of the 4-Wheel Steer button, comes on and stays on. If the 4 indicator is flashing, you will have to center the steering wheel by turning it to the left or right.

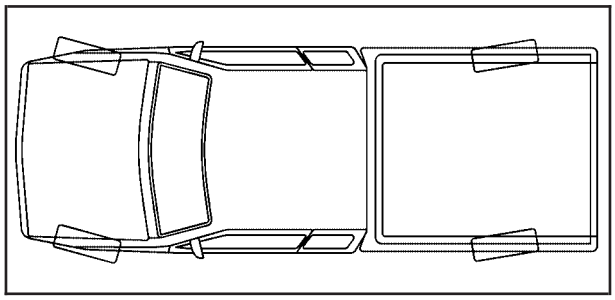

Slower Speeds (below 40 mph (64 km/h))

At slower speeds the front and rear wheels will turn in opposite directions. This helps the vehicle make tighter turns, such as during parking, cornering and turning into tight spaces.

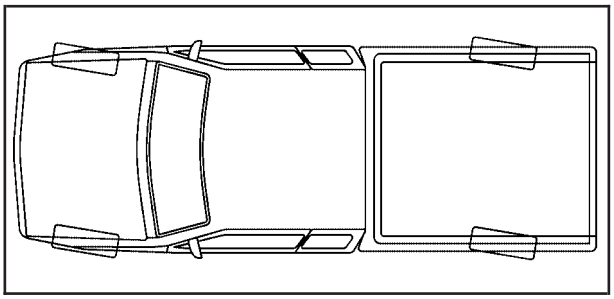

Higher Speeds (40 mph (64 km/h), and above)

At higher speeds the front and rear wheels will turn in the same direction. This improves stability of the vehicle during lane changes and sweeping turns.

(4-Wheel Steer Tow Mode): When towing a trailer, the 4-wheel steer tow mode provides enhanced stability allowing the trailer to follow the path of the tow vehicle more closely, especially during lane changes.

In this mode the system operates much like the 4 mode, but is enhanced for trailer towing. It is recommended for all types and weights of trailers.

To engage the 4-Wheel Steer tow mode, press the button until the 4 and tow mode indicators light up on the instrument panel. If the tow indicator is flashing, you will have to center the steering wheel by turning it to the left or right. While in the 4-wheel steer tow mode, it is possible the steering wheel may be slightly off center. For more information, see *Towing a Trailer on page 4-68*.

Car Washes for QUADRASTEER™ Equipped Vehicles

Notice: **Because your vehicle has a wider rear track a small number of older car washes may be too narrow for your vehicle. Conveyor systems on some automatic car washes may damage your vehicle. Only use conveyor system car washes with 13-inch (33 cm) wide conveyor rails and/or stationary washes with at least 82 inches (208 cm) between the rails. Before using the car wash check with the manager.**

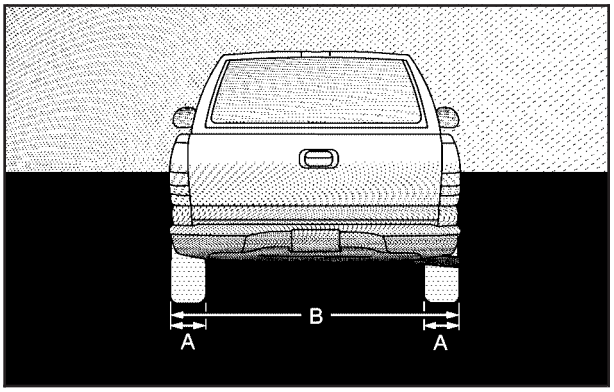

A. 13 inches (33 cm)
B. 82 inches (208 cm)

Off-Road Recovery

You may find that your right wheels have dropped off the edge of a road onto the shoulder while you are driving.

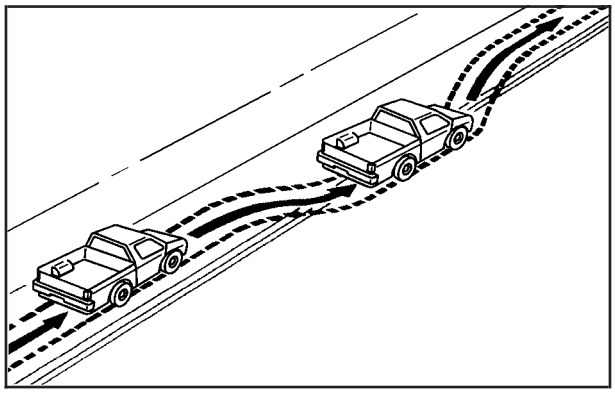

If the level of the shoulder is only slightly below the pavement, recovery should be fairly easy. Ease off the accelerator and then, if there is nothing in the way, steer so that your vehicle straddles the edge of the pavement. You can turn the steering wheel up to one-quarter turn until the right front tire contacts the pavement edge. Then turn your steering wheel to go straight down the roadway.

Passing

The driver of a vehicle about to pass another on a two-lane highway waits for just the right moment, accelerates, moves around the vehicle ahead, then goes back into the right lane again. A simple maneuver?

Not necessarily! Passing another vehicle on a two-lane highway is a potentially dangerous move, since the passing vehicle occupies the same lane as oncoming traffic for several seconds. A miscalculation, an error in judgment, or a brief surrender to frustration or anger can suddenly put the passing driver face to face with the worst of all traffic accidents — the head-on collision.

So here are some tips for passing:

- Drive ahead. Look down the road, to the sides and to crossroads for situations that might affect your passing patterns. If you have any doubt whatsoever about making a successful pass, wait for a better time.
- Watch for traffic signs, pavement markings and lines. If you can see a sign up ahead that might indicate a turn or an intersection, delay your pass. A broken center line usually indicates it is all right to pass, providing the road ahead is clear. Never cross a solid line on your side of the lane or a double solid line, even if the road seems empty of approaching traffic.

- Do not get too close to the vehicle you want to pass while you are awaiting an opportunity. For one thing, following too closely reduces your area of vision, especially if you are following a larger vehicle. Also, you will not have adequate space if the vehicle ahead suddenly slows or stops. Keep back a reasonable distance.
- When it looks like a chance to pass is coming up, start to accelerate but stay in the right lane and do not get too close. Time your move so you will be increasing speed as the time comes to move into the other lane. If the way is clear to pass, you will have a running start that more than makes up for the distance you would lose by dropping back. And if something happens to cause you to cancel your pass, you need only slow down and drop back again and wait for another opportunity.
- If other vehicles are lined up to pass a slow vehicle, wait your turn. But take care that someone is not trying to pass you as you pull out to pass the slow vehicle. Remember to glance over your shoulder and check the blind spot.
- Check your mirrors, glance over your shoulder and start your left lane change signal before moving out of the right lane to pass. When you are far enough ahead of the passed vehicle to see its front in your inside mirror, activate your right lane change signal and move back into the right lane. Remember that if your right outside mirror is convex, the vehicle you just passed may seem to be farther away from you than it really is.
- Try not to pass more than one vehicle at a time on two-lane roads. Reconsider before passing the next vehicle.
- Do not overtake a slowly moving vehicle too rapidly. Even though the brake lamps are not flashing, it may be slowing down or starting to turn.
- If you are being passed, make it easy for the following driver to get ahead of you. Perhaps you can ease a little to the right.

Loss of Control

Let us review what driving experts say about what happens when the three control systems — brakes, steering, and acceleration — do not have enough friction where the tires meet the road to do what the driver has asked.

In any emergency, do not give up. Keep trying to steer and constantly seek an escape route or area of less danger.

Skidding

In a skid, a driver can lose control of the vehicle. Defensive drivers avoid most skids by taking reasonable care suited to existing conditions, and by not overdriving those conditions. But skids are always possible.

The three types of skids correspond to your vehicle's three control systems. In the braking skid, your wheels are not rolling. In the steering or cornering skid, too much speed or steering in a curve causes tires to slip and lose cornering force. And in the acceleration skid, too much throttle causes the driving wheels to spin.

A cornering skid is best handled by easing your foot off the accelerator pedal.

If you have the Traction Assist System, remember: It helps avoid only the acceleration skid. If you do not have this system, or if the system is off, then an acceleration skid is also best handled by easing your foot off the accelerator pedal.

If your vehicle starts to slide, ease your foot off the accelerator pedal and quickly steer the way you want the vehicle to go. If you start steering quickly enough, your vehicle may straighten out. Always be ready for a second skid if it occurs.

Of course, traction is reduced when water, snow, ice, gravel, or other material is on the road. For safety, you will want to slow down and adjust your driving to these conditions. It is important to slow down on slippery surfaces because stopping distance will be longer and vehicle control more limited.

While driving on a surface with reduced traction, try your best to avoid sudden steering, acceleration, or braking, including engine braking by shifting to a lower gear. Any sudden changes could cause the tires to slide. You may not realize the surface is slippery until your vehicle is skidding. Learn to recognize warning clues — such as enough water, ice, or packed snow on the road to make a mirrored surface — and slow down when you have any doubt.

Remember: Any anti-lock brake system (ABS) helps avoid only the braking skid.

Off-Road Driving with Your Four-Wheel-Drive Vehicle

This off-road guide is for vehicles that have four-wheel drive. Also, see *Braking on page 4-5*. If your vehicle does not have four-wheel drive or is equipped with 20-inch tire/wheel assemblies, you should not drive off-road unless you are on a level, solid surface.

Off-road driving can be great fun. But it does have some definite hazards. The greatest of these is the terrain itself.

“Off-roading” means you have left the great North American road system behind. Traffic lanes are not marked. Curves are not banked. There are no road signs. Surfaces can be slippery, rough, uphill or downhill. In short, you have gone right back to nature.

Off-road driving involves some new skills. And that is why it is very important that you read this guide. You will find many driving tips and suggestions. These will help make your off-road driving safer and more enjoyable.

If you think you will need some more ground clearance at the front of your vehicle, you can remove the front bumper lower air dam.

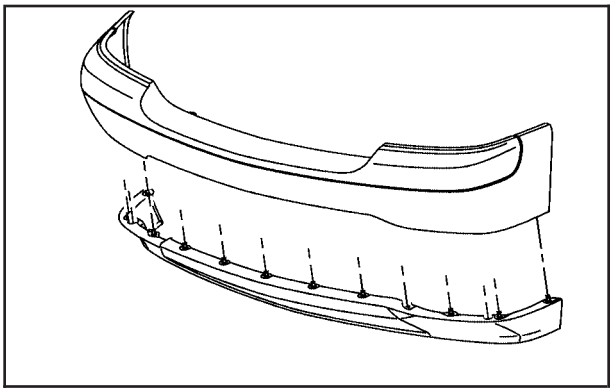

The front bumper lower air dam is held in place by a series of push-pins located around the lower edge of the front bumper. The push-pins are accessible from underneath the front bumper.

The following steps must be performed on each of the push-pins to remove the air dam:

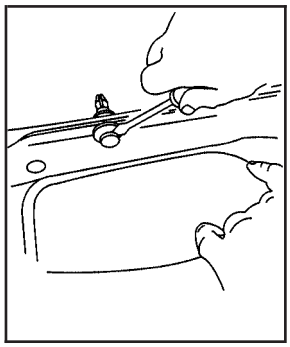

1. Insert a tool into the push-pin slot and pull downward until the push-pin snaps loose.

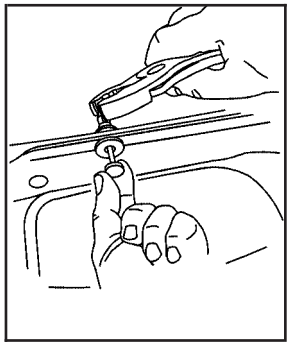

2. While continuing to pull downward on the push-pin, squeeze and turn the expandable end of the push-pin with a tool until it releases from the retainer.

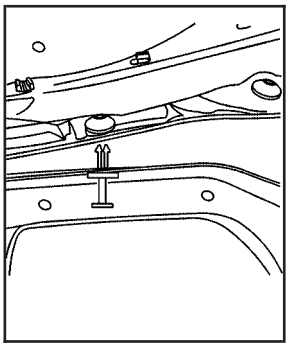

3. Pull the push-pins and lower dam assembly away from the retainers until the lower dam is free.

When you are back on roads, though, be sure to replace the air dam.

Notice: **Operating your vehicle for extended periods without the front bumper lower air dam installed can cause improper air flow to the engine and may allow things like fog lamps or tow hooks on the front of your vehicle to be damaged. Always be sure to replace the front bumper air dam when you are finished off-road driving.**

To reinstall the lower air dam, do the following:

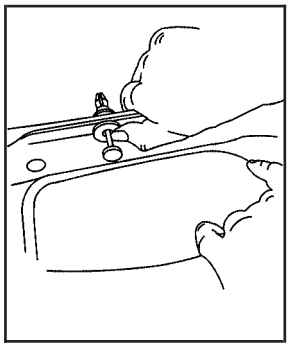

1. Line up each push-pin with its intended retainer and push the washer portion of the push-pin toward the retainer until it locks into place.

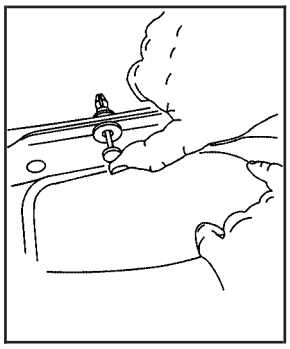

2. Push the flat end of the push-pin toward the retainer until it locks into place, making sure each is secure.

Before You Go Off-Roading

There are some things to do before you go out. For example, be sure to have all necessary maintenance and service work done. Check to make sure all underbody shields (if so equipped) are properly attached. Be sure you read all the information about your four-wheel-drive vehicle in this manual. Is there enough fuel? Is the spare tire fully inflated? Are the fluid levels up where they should be? What are the local laws that apply to off-roading where you will be driving? If you do not know, you should check with law enforcement people in the area. Will you be on someone's private land? If so, be sure to get the necessary permission.

Loading Your Vehicle for Off-Road Driving

There are some important things to remember about how to load your vehicle.

- The heaviest things should be on the load floor and forward of your rear axle. Put heavier items as far forward as you can.
- Be sure the load is secured properly, so driving on the off-road terrain does not toss things around.

⚠ CAUTION:

- **Cargo on the load floor piled higher than the seatbacks can be thrown forward during a sudden stop. You or your passengers could be injured. Keep cargo below the top of the seatbacks.**
- **Unsecured cargo on the load floor can be tossed about when driving over rough terrain. You or your passengers can be struck by flying objects. Secure the cargo properly.**
- **Heavy loads on the roof raise the vehicle's center of gravity, making it more likely to roll over. You can be seriously or fatally injured if the vehicle rolls over. Put heavy loads inside the cargo area, not on the roof. Keep cargo in the cargo area as far forward and low as possible.**

You will find other important information in this manual. See *Loading Your Vehicle on page 4-50* and *Tires on page 5-72*.

Environmental Concerns

Off-road driving can provide wholesome and satisfying recreation. However, it also raises environmental concerns. We recognize these concerns and urge every off-roader to follow these basic rules for protecting the environment:

- Always use established trails, roads and areas that have been specially set aside for public off-road recreational driving; obey all posted regulations.
- Avoid any driving practice that could damage the environment — shrubs, flowers, trees, grasses — or disturb wildlife (this includes wheel-spinning, breaking down trees or unnecessary driving through streams or over soft ground).
- Always carry a litter bag — make sure all refuse is removed from any campsite before leaving.
- Take extreme care with open fires (where permitted), camp stoves and lanterns.
- Never park your vehicle over dry grass or other combustible materials that could catch fire from the heat of the vehicle's exhaust system.

Traveling to Remote Areas

It makes sense to plan your trip, especially when going to a remote area. Know the terrain and plan your route. You are much less likely to get bad surprises. Get accurate maps of trails and terrain. Try to learn of any blocked or closed roads.

It is also a good idea to travel with at least one other vehicle. If something happens to one of them, the other can help quickly.

Does your vehicle have a winch? If so, be sure to read the winch instructions. In a remote area, a winch can be handy if you get stuck. But you will want to know how to use it properly.

Getting Familiar with Off-Road Driving

It is a good idea to practice in an area that is safe and close to home before you go into the wilderness. Off-road driving does require some new and different driving skills. Here is what we mean.

Tune your senses to different kinds of signals. Your eyes, for example, need to constantly sweep the terrain for unexpected obstacles. Your ears need to listen for unusual tire or engine sounds. With your arms, hands, feet and body, you will need to respond to vibrations and vehicle bounce.

Controlling your vehicle is the key to successful off-road driving. One of the best ways to control your vehicle is to control your speed. Here are some things to keep in mind. At higher speeds:

- you approach things faster and you have less time to scan the terrain for obstacles.
- you have less time to react.
- you have more vehicle bounce when you drive over obstacles.
- you will need more distance for braking, especially since you are on an unpaved surface.

⚠ CAUTION:

When you are driving off-road, bouncing and quick changes in direction can easily throw you out of position. This could cause you to lose control and crash. So, whether you're driving on or off the road, you and your passengers should wear safety belts.

Scanning the Terrain

Off-road driving can take you over many different kinds of terrain. You need to be familiar with the terrain and its many different features. Here are some things to consider.

Surface Conditions: Off-roading can take you over hard-packed dirt, gravel, rocks, grass, sand, mud, snow or ice. Each of these surfaces affects the steering, acceleration and braking of your vehicle in different ways. Depending upon the kind of surface you are on, you may experience slipping, sliding, wheel spinning, delayed acceleration, poor traction and longer braking distances.

Surface Obstacles: Unseen or hidden obstacles can be hazardous. A rock, log, hole, rut or bump can startle you if you are not prepared for them. Often these obstacles are hidden by grass, bushes, snow or even the rise and fall of the terrain itself. Here are some things to consider:

- Is the path ahead clear?
- Will the surface texture change abruptly up ahead?
- Does the travel take you uphill or downhill? (There is more discussion of these subjects later.)
- Will you have to stop suddenly or change direction quickly?

When you drive over obstacles or rough terrain, keep a firm grip on the steering wheel. Ruts, troughs or other surface features can jerk the wheel out of your hands if you are not prepared.

When you drive over bumps, rocks, or other obstacles, your wheels can leave the ground. If this happens, even with one or two wheels, you cannot control the vehicle as well or at all.

Because you will be on an unpaved surface, it is especially important to avoid sudden acceleration, sudden turns or sudden braking.

In a way, off-road driving requires a different kind of alertness from driving on paved roads and highways. There are no road signs, posted speed limits or signal lights. You have to use your own good judgment about what is safe and what is not.

Drinking and driving can be very dangerous on any road. And this is certainly true for off-road driving. At the very time you need special alertness and driving skills, your reflexes, perceptions and judgment can be affected by even a small amount of alcohol. You could have a serious — or even fatal — accident if you drink and drive or ride with a driver who has been drinking. See *Drunken Driving on page 4-2*.

Driving on Off-Road Hills

Off-road driving often takes you up, down or across a hill. Driving safely on hills requires good judgment and an understanding of what your vehicle can and cannot do. There are some hills that simply cannot be driven, no matter how well built the vehicle.

⚠ CAUTION:

Many hills are simply too steep for any vehicle. If you drive up them, you will stall. If you drive down them, you cannot control your speed. If you drive across them, you will roll over. You could be seriously injured or killed. If you have any doubt about the steepness, do not drive the hill.

Approaching a Hill

When you approach a hill, you need to decide if it is one of those hills that is just too steep to climb, descend or cross. Steepness can be hard to judge. On a very small hill, for example, there may be a smooth, constant incline with only a small change in elevation where you can easily see all the way to the top. On a large hill, the incline may get steeper as you near the top, but you may not see this because the crest of the hill is hidden by bushes, grass or shrubs.

Here are some other things to consider as you approach a hill.

- Is there a constant incline, or does the hill get sharply steeper in places?
- Is there good traction on the hillside, or will the surface cause tire slipping?
- Is there a straight path up or down the hill so you will not have to make turning maneuvers?
- Are there obstructions on the hill that can block your path (boulders, trees, logs or ruts)?

- What is beyond the hill? Is there a cliff, an embankment, a drop-off, a fence? Get out and walk the hill if you do not know. It is the smart way to find out.
- Is the hill simply too rough? Steep hills often have ruts, gullies, troughs and exposed rocks because they are more susceptible to the effects of erosion.

Driving Uphill

Once you decide you can safely drive up the hill, you need to take some special steps.

- Use a low gear and get a firm grip on the steering wheel.
- Get a smooth start up the hill and try to maintain your speed. Do not use more power than you need, because you do not want your wheels to start spinning or sliding.
- Try to drive straight up the hill if at all possible. If the path twists and turns, you might want to find another route.

⚠ CAUTION:

Turning or driving across steep hills can be dangerous. You could lose traction, slide sideways, and possibly roll over. You could be seriously injured or killed. When driving up hills, always try to go straight up.

- Ease up on your speed as you approach the top of the hill.
- Attach a flag to the vehicle to make you more visible to approaching traffic on trails or hills.
- Sound the horn as you approach the top of the hill to let opposing traffic know you are there.
- Use your headlamps even during the day. They make you more visible to oncoming traffic.

⚠ CAUTION:

Driving to the top (crest) of a hill at full speed can cause an accident. There could be a drop-off, embankment, cliff, or even another vehicle. You could be seriously injured or killed. As you near the top of a hill, slow down and stay alert.

Q: What should I do if my vehicle stalls, or is about to stall, and I cannot make it up the hill?

A: If this happens, there are some things you should do, and there are some things you must not do. First, here is what you *should* do:

- Push the brake pedal to stop the vehicle and keep it from rolling backwards. Also, apply the parking brake.
- If your engine is still running, shift the transmission to REVERSE (R), release the parking brake, and slowly back down the hill in REVERSE (R).
- If your engine has stopped running, you will need to restart it. With the brake pedal pressed and the parking brake still applied, shift the transmission to PARK (P) (or shift to NEUTRAL if your vehicle has a manual transmission) and restart the engine. Then, shift to REVERSE (R), release the parking brake, and slowly back down the hill as straight as possible in REVERSE (R).
- As you are backing down the hill, put your left hand on the steering wheel at the 12 o'clock position. This way, you will be able to tell if your wheels are straight and maneuver as you back down. It is best that you back down the hill with your wheels straight rather than in the left or right direction. Turning the wheel too far to the left or right will increase the possibility of a rollover.

Here are some things you *must not* do if you stall, or are about to stall, when going up a hill.

- Never attempt to prevent a stall by shifting into NEUTRAL (N) (or pressing the clutch, if you have a manual transmission) to rev-up the engine and regain forward momentum. This will not work. Your vehicle will roll backwards very quickly and you could go out of control.

  Instead, apply the regular brake to stop the vehicle. Then apply the parking brake. Shift to REVERSE (R), release the parking brake, and slowly back straight down.
- Never attempt to turn around if you are about to stall when going up a hill. If the hill is steep enough to stall your vehicle, it is steep enough to cause you to roll over if you turn around. If you cannot make it up the hill, you must back straight down the hill.

Q: Suppose, after stalling, I try to back down the hill and decide I just cannot do it. What should I do?

A: Set the parking brake, put your transmission in PARK (P), or the manual transmission in FIRST (1), and turn off the engine. Leave the vehicle and go get some help. Exit on the uphill side and stay clear of the path the vehicle would take if it rolled downhill. Do not shift the transfer case to NEUTRAL when you leave the vehicle. Leave it in some gear.

⚠ CAUTION:

Shifting the transfer case to NEUTRAL can cause your vehicle to roll even if the transmission is in PARK (P) (or, if you have the manual transmission, even if you are in gear). This is because the NEUTRAL position on the transfer case overrides the transmission. You or someone else could be injured. If you are going to leave your vehicle, set the parking brake and shift the transmission to PARK (P) (or, put your manual transmission in FIRST (1)). But do not shift the transfer case to NEUTRAL. Leave the transfer case in the 2 Wheel High, 4 High or 4 Low position.

Driving Downhill

When off-roading takes you downhill, you will want to consider a number of things:

- How steep is the downhill? Will I be able to maintain vehicle control?
- What is the surface like? Smooth? Rough? Slippery? Hard-packed dirt? Gravel?
- Are there hidden surface obstacles? Ruts? Logs? Boulders?
- What is at the bottom of the hill? Is there a hidden creek bank or even a river bottom with large rocks?

If you decide you can go down a hill safely, then try to keep your vehicle headed straight down, and use a low gear. This way, engine drag can help your brakes and they will not have to do all the work. Descend slowly, keeping your vehicle under control at all times.

⚠ CAUTION:

Heavy braking when going down a hill can cause your brakes to overheat and fade. This could cause loss of control and a serious accident. Apply the brakes lightly when descending a hill and use a low gear to keep vehicle speed under control.

Q: Are there some things I should not do when driving down a hill?

A: Yes! These are important because if you ignore them you could lose control and have a serious accident.

- When driving downhill, avoid turns that take you across the incline of the hill. A hill that is not too steep to drive down may be too steep to drive across. You could roll over if you do not drive straight down.
- Never go downhill with the transmission in NEUTRAL (N), or with the clutch pedal pressed down with a manual transmission. This is called “free-wheeling.” Your brakes will have to do all the work and could overheat and fade.

Q: Am I likely to stall when going downhill?

A: It is much more likely to happen going uphill. But if it happens going downhill, here is what to do.

1. Stop your vehicle by applying the regular brakes. Apply the parking brake.
2. Shift to PARK (P) (or to NEUTRAL with the manual transmission) and, while still braking, restart the engine.
3. Shift back to a low gear, release the parking brake, and drive straight down.
4. If the engine will not start, get out and get help.

Driving Across an Incline

Sooner or later, an off-road trail will probably go across the incline of a hill. If this happens, you have to decide whether to try to drive across the incline. Here are some things to consider:

- A hill that can be driven straight up or down may be too steep to drive across. When you go straight up or down a hill, the length of the wheel base (the distance from the front wheels to the rear wheels) reduces the likelihood the vehicle will tumble end over end. But when you drive across an incline, the much more narrow track width (the distance between the left and right wheels) may not prevent the vehicle from tilting and rolling over. Also, driving across an incline puts more weight on the downhill wheels. This could cause a downhill slide or a rollover.
- Surface conditions can be a problem when you drive across a hill. Loose gravel, muddy spots, or even wet grass can cause your tires to slip sideways, downhill. If the vehicle slips sideways, it can hit something that will trip it (a rock, a rut, etc.) and roll over.
- Hidden obstacles can make the steepness of the incline even worse. If you drive across a rock with the uphill wheels, or if the downhill wheels drop into a rut or depression, your vehicle can tilt even more.

For reasons like these, you need to decide carefully whether to try to drive across an incline. Just because the trail goes across the incline does not mean you have to drive it. The last vehicle to try it might have rolled over.

⚠ CAUTION:

Driving across an incline that is too steep will make your vehicle roll over. You could be seriously injured or killed. If you have any doubt about the steepness of the incline, do not drive across it. Find another route instead.

Q: What if I am driving across an incline that is not too steep, but I hit some loose gravel and start to slide downhill. What should I do?

A: If you feel your vehicle starting to slide sideways, turn downhill. This should help straighten out the vehicle and prevent the side slipping. However, a much better way to prevent this is to get out and "walk the course" so you know what the surface is like before you drive it.

Stalling on an Incline

If your vehicle stalls when you are crossing an incline, be sure you (and your passengers) get out on the uphill side, even if the door there is harder to open. If you get out on the downhill side and the vehicle starts to roll over, you will be right in its path.

If you have to walk down the slope, stay out of the path the vehicle will take if it does roll over.

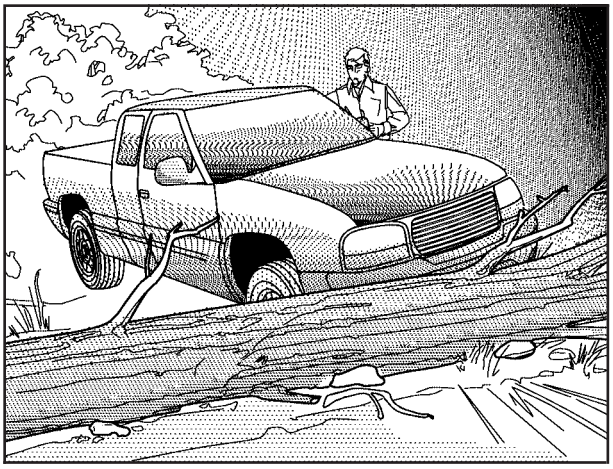

⚠ CAUTION:

Getting out on the downhill (low) side of a vehicle stopped across an incline is dangerous. If the vehicle rolls over, you could be crushed or killed. Always get out on the uphill (high) side of the vehicle and stay well clear of the rollover path.

Driving in Mud, Sand, Snow or Ice

When you drive in mud, snow or sand, your wheels will not get good traction. You cannot accelerate as quickly, turning is more difficult, and you will need longer braking distances.

It is best to use a low gear when you are in mud — the deeper the mud, the lower the gear. In really deep mud, the idea is to keep your vehicle moving so you do not get stuck.

When you drive on sand, you will sense a change in wheel traction. But it will depend upon how loosely packed the sand is. On loosely packed sand (as on beaches or sand dunes) your tires will tend to sink into the sand. This has an effect on steering, accelerating and braking. Drive at a reduced speed and avoid sharp turns or abrupt maneuvers.

Hard packed snow and ice offer the worst tire traction. On these surfaces, it is very easy to lose control. On wet ice, for example, the traction is so poor that you will have difficulty accelerating. And if you do get moving, poor steering and difficult braking can cause you to slide out of control.

⚠ CAUTION:

Driving on frozen lakes, ponds or rivers can be dangerous. Underwater springs, currents under the ice, or sudden thaws can weaken the ice. Your vehicle could fall through the ice and you and your passengers could drown. Drive your vehicle on safe surfaces only.

Driving in Water

Heavy rain can mean flash flooding, and flood waters demand extreme caution.

Find out how deep the water is before you drive through it. If it is deep enough to cover your wheel hubs, axles or exhaust pipe, do not try it — you probably will not get through. Also, water that deep can damage your axle and other vehicle parts.

If the water is not too deep, drive slowly through it. At faster speeds, water splashes on your ignition system and your vehicle can stall. Stalling can also occur if you get your tailpipe under water. And, as long as your tailpipe is under water, you will never be able to start your engine. When you go through water, remember that when your brakes get wet, it may take you longer to stop.

⚠ CAUTION:

Driving through rushing water can be dangerous. Deep water can sweep your vehicle downstream and you and your passengers could drown. If it is only shallow water, it can still wash away the ground from under your tires, and you could lose traction and roll the vehicle over. Do not drive through rushing water.

See *Driving in Rain and on Wet Roads on page 4-36* for more information on driving through water.

After Off-Road Driving

Remove any brush or debris that has collected on the underbody, chassis or under the hood. These accumulations can be a fire hazard.

After operation in mud or sand, have the brake linings cleaned and checked. These substances can cause glazing and uneven braking. Check the body structure, steering, suspension, wheels, tires and exhaust system for damage. Also, check the fuel lines and cooling system for any leakage.

Your vehicle will require more frequent service due to off-road use. Refer to the Maintenance Schedule for additional information.

Driving at Night

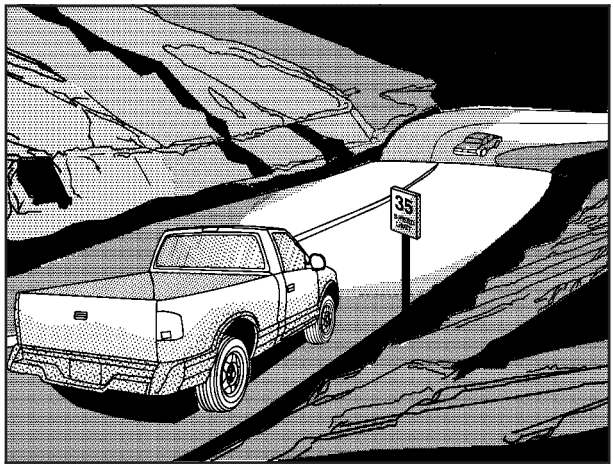

Night driving is more dangerous than day driving. One reason is that some drivers are likely to be impaired — by alcohol or drugs, with night vision problems, or by fatigue.

Here are some tips on night driving.

- Drive defensively.
- Do not drink and drive.
- Adjust your inside rearview mirror to reduce the glare from headlamps behind you.
- Since you cannot see as well, you may need to slow down and keep more space between you and other vehicles.
- Slow down, especially on higher speed roads. Your headlamps can light up only so much road ahead.
- In remote areas, watch for animals.
- If you are tired, pull off the road in a safe place and rest.

No one can see as well at night as in the daytime. But as we get older these differences increase. A 50-year-old driver may require at least twice as much light to see the same thing at night as a 20-year-old.

What you do in the daytime can also affect your night vision. For example, if you spend the day in bright sunshine you are wise to wear sunglasses. Your eyes will have less trouble adjusting to night. But if you are driving, do not wear sunglasses at night. They may cut down on glare from headlamps, but they also make a lot of things invisible.

You can be temporarily blinded by approaching headlamps. It can take a second or two, or even several seconds, for your eyes to re-adjust to the dark. When you are faced with severe glare, as from a driver who does not lower the high beams, or a vehicle with misaimed headlamps, slow down a little. Avoid staring directly into the approaching headlamps.

Keep your windshield and all the glass on your vehicle clean — inside and out. Glare at night is made much worse by dirt on the glass. Even the inside of the glass can build up a film caused by dust. Dirty glass makes lights dazzle and flash more than clean glass would, making the pupils of your eyes contract repeatedly.

Remember that your headlamps light up far less of a roadway when you are in a turn or curve. Keep your eyes moving; that way, it is easier to pick out dimly lighted objects. Just as your headlamps should be checked regularly for proper aim, so should your eyes be examined regularly. Some drivers suffer from night blindness — the inability to see in dim light — and are not even aware of it.

Driving in Rain and on Wet Roads

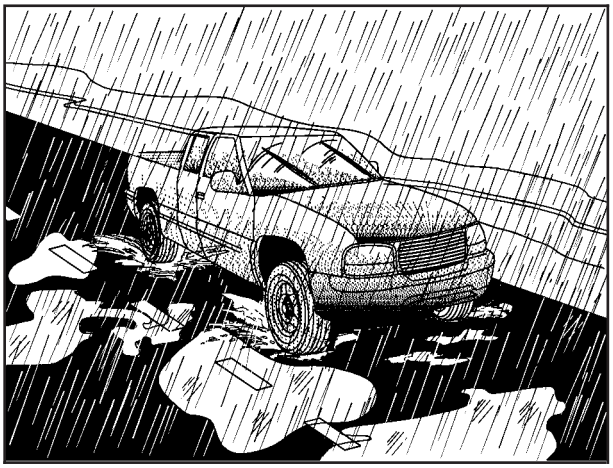

Rain and wet roads can mean driving trouble. On a wet road, you cannot stop, accelerate, or turn as well because your tire-to-road traction is not as good as on dry roads. And, if your tires do not have much tread left, you will get even less traction. It is always wise to go slower and be cautious if rain starts to fall while you are driving. The surface may get wet suddenly when your reflexes are tuned for driving on dry pavement.

The heavier the rain, the harder it is to see. Even if your windshield wiper blades are in good shape, a heavy rain can make it harder to see road signs and traffic signals, pavement markings, the edge of the road, and even people walking.

It is wise to keep your wiping equipment in good shape and keep your windshield washer tank filled with washer fluid. Replace your windshield wiper inserts when they show signs of streaking or missing areas on the windshield, or when strips of rubber start to separate from the inserts.

Driving too fast through large water puddles or even going through some car washes can cause problems, too. The water may affect your brakes. Try to avoid puddles. But if you cannot, try to slow down before you hit them.

⚠ CAUTION:

Wet brakes can cause accidents. They will not work as well in a quick stop and may cause pulling to one side. You could lose control of the vehicle.

After driving through a large puddle of water or a car wash, apply your brake pedal lightly until your brakes work normally.

Hydroplaning

Hydroplaning is dangerous. So much water can build up under your tires that they can actually ride on the water. This can happen if the road is wet enough and you are going fast enough. When your vehicle is hydroplaning, it has little or no contact with the road.

Hydroplaning does not happen often. But it can if your tires do not have much tread or if the pressure in one or more is low. It can happen if a lot of water is standing on the road. If you can see reflections from trees, telephone poles, or other vehicles, and raindrops dimple the water's surface, there could be hydroplaning.

Hydroplaning usually happens at higher speeds. There just is not a hard and fast rule about hydroplaning. The best advice is to slow down when it is raining.

Driving Through Deep Standing Water

Notice: **If you drive too quickly through deep puddles or standing water, water can come in through your engine's air intake and badly damage your engine. Never drive through water that is slightly lower than the underbody of your vehicle. If you cannot avoid deep puddles or standing water, drive through them very slowly.**

Driving Through Flowing Water

⚠ CAUTION:

Flowing or rushing water creates strong forces. If you try to drive through flowing water, as you might at a low water crossing, your vehicle can be carried away. As little as six inches of flowing water can carry away a smaller vehicle. If this happens, you and other vehicle occupants could drown. Do not ignore police warning signs, and otherwise be very cautious about trying to drive through flowing water.

Some Other Rainy Weather Tips

- Turn on your low-beam headlamps — not just your parking lamps — to help make you more visible to others.
- Besides slowing down, allow some extra following distance. And be especially careful when you pass another vehicle. Allow yourself more clear room ahead, and be prepared to have your view restricted by road spray.
- Have good tires with proper tread depth. See *Tires on page 5-72*.

City Driving

One of the biggest problems with city streets is the amount of traffic on them. You will want to watch out for what the other drivers are doing and pay attention to traffic signals.

Here are ways to increase your safety in city driving:

- Know the best way to get to where you are going. Get a city map and plan your trip into an unknown part of the city just as you would for a cross-country trip.
- Try to use the freeways that rim and crisscross most large cities. You will save time and energy. See *Freeway Driving on page 4-40*.
- Treat a green light as a warning signal. A traffic light is there because the corner is busy enough to need it. When a light turns green, and just before you start to move, check both ways for vehicles that have not cleared the intersection or may be running the red light.

Freeway Driving

Mile for mile, freeways — also called thruways, parkways, expressways, turnpikes, or superhighways — are the safest of all roads. But they have their own special rules.

The most important advice on freeway driving is: Keep up with traffic and keep to the right. Drive at the same speed most of the other drivers are driving. Too-fast or too-slow driving breaks a smooth traffic flow. Treat the left lane on a freeway as a passing lane.

At the entrance, there is usually a ramp that leads to the freeway. If you have a clear view of the freeway as you drive along the entrance ramp, you should begin to check traffic. Try to determine where you expect to blend with the flow. Try to merge into the gap at close to the prevailing speed. Switch on your turn signal, check your mirrors, and glance over your shoulder as often as necessary. Try to blend smoothly with the traffic flow.

Once you are on the freeway, adjust your speed to the posted limit or to the prevailing rate if it is slower. Stay in the right lane unless you want to pass.

Before changing lanes, check your mirrors. Then use your turn signal.

Just before you leave the lane, glance quickly over your shoulder to make sure there is not another vehicle in your blind spot.

Once you are moving on the freeway, make certain you allow a reasonable following distance. Expect to move slightly slower at night.

When you want to leave the freeway, move to the proper lane well in advance. If you miss your exit, do not, under any circumstances, stop and back up. Drive on to the next exit.

The exit ramp can be curved, sometimes quite sharply. The exit speed is usually posted.

Reduce your speed according to your speedometer, not to your sense of motion. After driving for any distance at higher speeds, you may tend to think you are going slower than you actually are.

Before Leaving on a Long Trip

Make sure you are ready. Try to be well rested. If you must start when you are not fresh — such as after a day's work — do not plan to make too many miles that first part of the journey. Wear comfortable clothing and shoes you can easily drive in.

Is your vehicle ready for a long trip? If you keep it serviced and maintained, it is ready to go. If it needs service, have it done before starting out. Of course, you will find experienced and able service experts in GM dealerships all across North America. They will be ready and willing to help if you need it.

Here are some things you can check before a trip:

- *Windshield Washer Fluid:* Is the reservoir full? Are all windows clean inside and outside?
- *Wiper Blades:* Are they in good shape?
- *Fuel, Engine Oil, Other Fluids:* Have you checked all levels?
- *Lamps:* Are they all working? Are the lenses clean?
- *Tires:* They are vitally important to a safe, trouble-free trip. Is the tread good enough for long-distance driving? Are the tires all inflated to the recommended pressure?
- *Weather Forecasts:* What is the weather outlook along your route? Should you delay your trip a short time to avoid a major storm system?
- *Maps:* Do you have up-to-date maps?

Highway Hypnosis

Is there actually such a condition as highway hypnosis? Or is it just plain falling asleep at the wheel? Call it highway hypnosis, lack of awareness, or whatever.

There is something about an easy stretch of road with the same scenery, along with the hum of the tires on the road, the drone of the engine, and the rush of the wind against the vehicle that can make you sleepy. Do not let it happen to you! If it does, your vehicle can leave the road in less than a second, and you could crash and be injured.

What can you do about highway hypnosis? First, be aware that it can happen.

Then here are some tips:

- Make sure your vehicle is well ventilated, with a comfortably cool interior.
- Keep your eyes moving. Scan the road ahead and to the sides. Check your mirrors and your instruments frequently.
- If you get sleepy, pull off the road into a rest, service, or parking area and take a nap, get some exercise, or both. For safety, treat drowsiness on the highway as an emergency.

Hill and Mountain Roads

Driving on steep hills or mountains is different from driving in flat or rolling terrain.

If you drive regularly in steep country, or if you are planning to visit there, here are some tips that can make your trips safer and more enjoyable. See *Off-Road Driving with Your Four-Wheel-Drive Vehicle on page 4-20* for information about driving off-road.

- Keep your vehicle in good shape. Check all fluid levels and also the brakes, tires, cooling system, and transmission. These parts can work hard on mountain roads.
- Know how to go down hills. The most important thing to know is this: let your engine do some of the slowing down. Shift to a lower gear when you go down a steep or long hill.

⚠ CAUTION:

If you do not shift down, your brakes could get so hot that they would not work well. You would then have poor braking or even none going down a hill. You could crash. Shift down to let your engine assist your brakes on a steep downhill slope.

⚠ CAUTION:

Coasting downhill in NEUTRAL (N) or with the ignition off is dangerous. Your brakes will have to do all the work of slowing down. They could get so hot that they would not work well. You would then have poor braking or even none going down a hill. You could crash. Always have your engine running and your vehicle in gear when you go downhill.

- Know how to go uphill. You may want to shift down to a lower gear. The lower gears help cool your engine and transmission, and you can climb the hill better.
- Stay in your own lane when driving on two-lane roads in hills or mountains. Do not swing wide or cut across the center of the road. Drive at speeds that let you stay in your own lane.
- As you go over the top of a hill, be alert. There could be something in your lane, like a stalled car or an accident.
- You may see highway signs on mountains that warn of special problems. Examples are long grades, passing or no-passing zones, a falling rocks area, or winding roads. Be alert to these and take appropriate action.

Winter Driving

Here are some tips for winter driving:

- Have your vehicle in good shape for winter.
- You may want to put winter emergency supplies in your vehicle.

Also see *Tires on page 5-72*.

Include an ice scraper, a small brush or broom, a supply of windshield washer fluid, a rag, some winter outer clothing, a small shovel, a flashlight, a red cloth, and reflective warning triangles. And, if you will be driving under severe conditions, include a small bag of sand, a piece of old carpet, or a couple of burlap bags to help provide traction. Be sure you properly secure these items in your vehicle.

Driving on Snow or Ice

Most of the time, those places where your tires meet the road probably have good traction.

However, if there is snow or ice between your tires and the road, you can have a very slippery situation. You will have a lot less traction, or grip, and will need to be very careful.

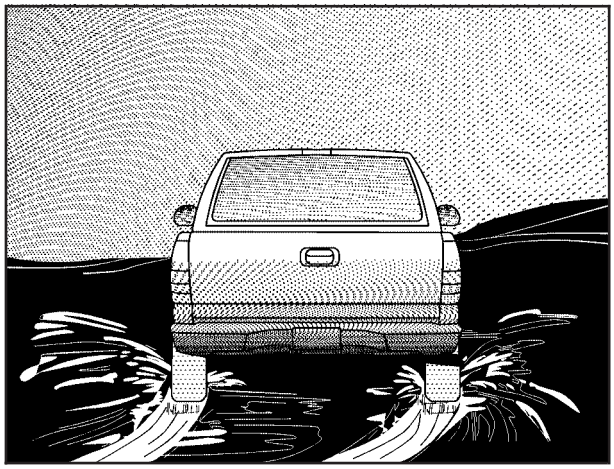

What is the worst time for this? Wet ice. Very cold snow or ice can be slick and hard to drive on. But wet ice can be even more trouble because it may offer the least traction of all. You can get wet ice when it is about freezing (32°F; 0°C) and freezing rain begins to fall. Try to avoid driving on wet ice until salt and sand crews can get there.

Whatever the condition — smooth ice, packed, blowing, or loose snow — drive with caution.

If you have traction assist, it will improve your ability to accelerate when driving on a slippery road. But you can turn the traction assist system off if you ever need to. You should turn the system off if your vehicle ever gets stuck in sand, mud, ice or snow. See *If You Are Stuck: In Sand, Mud, Ice or Snow on page 4-48*. Even though your vehicle has a traction system, you will want to slow down and adjust your driving to the road conditions. Under certain conditions, you may want to turn the traction assist system off, such as when driving through deep snow and loose gravel, to help maintain vehicle motion at lower speeds. See *Traction Assist System (TAS) on page 4-8*.

If you do not have a traction system, accelerate gently. Try not to break the fragile traction. If you accelerate too fast, the drive wheels will spin and polish the surface under the tires even more.

Your anti-lock brakes improve your vehicle's stability when you make a hard stop on a slippery road. Even though you have an anti-lock braking system, you will want to begin stopping sooner than you would on dry pavement. See *Anti-Lock Brake System (ABS) on page 4-6*.

- Allow greater following distance on any slippery road.
- Watch for slippery spots. The road might be fine until you hit a spot that is covered with ice. On an otherwise clear road, ice patches may appear in

shaded areas where the sun cannot reach, such as around clumps of trees, behind buildings, or under bridges. Sometimes the surface of a curve or an overpass may remain icy when the surrounding roads are clear. If you see a patch of ice ahead of you, brake before you are on it. Try not to brake while you are actually on the ice, and avoid sudden steering maneuvers.

If You Are Caught in a Blizzard

If you are stopped by heavy snow, you could be in a serious situation. You should probably stay with your vehicle unless you know for sure that you are near help and you can hike through the snow. Here are some things to do to summon help and keep yourself and your passengers safe:

- Turn on your hazard flashers.
- Tie a red cloth to your vehicle to alert police that you have been stopped by the snow.
- Put on extra clothing or wrap a blanket around you. If you do not have blankets or extra clothing, make body insulators from newspapers, burlap bags, rags, floor mats — anything you can wrap around yourself or tuck under your clothing to keep warm.

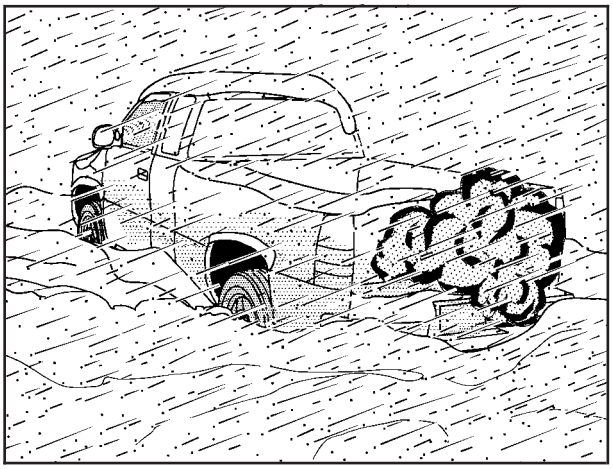

You can run the engine to keep warm, but be careful.

⚠ CAUTION:

Snow can trap exhaust gases under your vehicle. This can cause deadly CO (carbon monoxide) gas to get inside. CO could overcome you and kill you. You cannot see it or smell it, so you might not know it is in your vehicle. Clear away snow from around the base of your vehicle, especially any that is blocking your exhaust pipe. And check around again from time to time to be sure snow does not collect there.

Open a window just a little on the side of the vehicle that is away from the wind. This will help keep CO out.

Run your engine only as long as you must. This saves fuel. When you run the engine, make it go a little faster than just idle. That is, push the accelerator slightly. This uses less fuel for the heat that you get and it keeps the battery charged. You will need a well-charged battery to restart the vehicle, and possibly for signaling later on with your headlamps. Let the heater run for a while.

Then, shut the engine off and close the window almost all the way to preserve the heat. Start the engine again and repeat this only when you feel really uncomfortable from the cold. But do it as little as possible. Preserve the fuel as long as you can. To help keep warm, you can get out of the vehicle and do some fairly vigorous exercises every half hour or so until help comes.

If You Are Stuck: In Sand, Mud, Ice or Snow

In order to free your vehicle when it is stuck, you will need to spin the wheels, but you do not want to spin your wheels too fast. The method known as rocking can help you get out when you are stuck, but you must use caution.

⚠ CAUTION:

If you let your tires spin at high speed, they can explode, and you or others could be injured. And, the transmission or other parts of the vehicle can overheat. That could cause an engine compartment fire or other damage. When you are stuck, spin the wheels as little as possible. Do not spin the wheels above 35 mph (55 km/h) as shown on the speedometer.

Notice: **Spinning your wheels can destroy parts of your vehicle as well as the tires. If you spin the wheels too fast while shifting your transmission back and forth, you can destroy your transmission.**

For more information about using tire chains on your vehicle, see *Tire Chains on page 5-90*.

Rocking Your Vehicle to Get It Out

First, turn your steering wheel left and right. That will clear the area around your front wheels. If you have a four-wheel-drive vehicle, shift into 4HI. If your vehicle has the Traction Assist System, you should turn it off by pressing the TAS on/off button. Then shift back and forth between REVERSE (R) and a forward gear (or with a manual transmission, between FIRST (1) or SECOND (2) and REVERSE (R)), spinning the wheels as little as possible. Release the accelerator pedal while you shift, and press lightly on the accelerator pedal when the transmission is in gear. By slowly spinning your wheels in the forward and reverse directions, you will cause a rocking motion that may free your vehicle. If that does not get you out after a few tries, you may need to be towed out. Or, you can use your recovery hooks if your vehicle has them. If you do need to be towed out, see *Towing Your Vehicle on page 4-62*.

Recovery Hooks

Your vehicle may be equipped with recovery hooks. The hooks are provided at the front of your vehicle. You may need to use them if you are stuck off-road and need to be pulled to some place where you can continue driving.

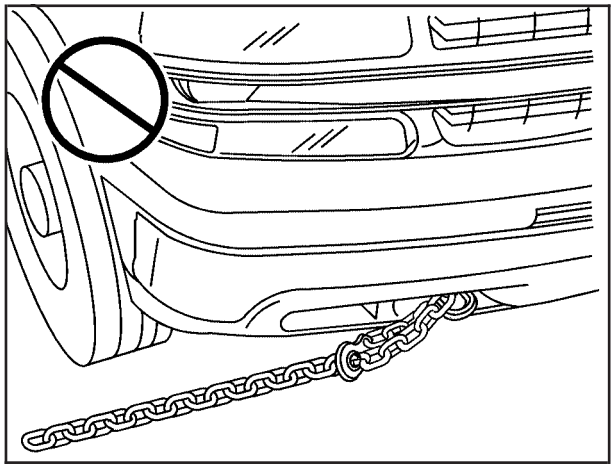

⚠ CAUTION:

These hooks, when used, are under a lot of force. Always pull the vehicle straight out. Never pull on the hooks at a sideways angle. The hooks could break off and you or others could be injured from the chain or cable snapping back.

Notice: **Never use recovery hooks to tow the vehicle. Your vehicle could be damaged and it would not be covered by warranty.**

Loading Your Vehicle

It is very important to know how much weight your vehicle can carry. This weight is called the vehicle capacity weight and includes the weight of all occupants, cargo and all nonfactory-installed options. Two labels on your vehicle show how much weight it was designed to carry, the Tire and Loading Information label and the Certification/Tire label.

⚠ CAUTION:

Do not load your vehicle any heavier than the Gross Vehicle Weight Rating (GVWR), or either the maximum front or rear Gross Axle Weight Rating (GAWR). If you do, parts on your vehicle can break, and it can change the way your vehicle handles. These could cause you to lose control and crash. Also, overloading can shorten the life of your vehicle.

Tire and Loading Information Label

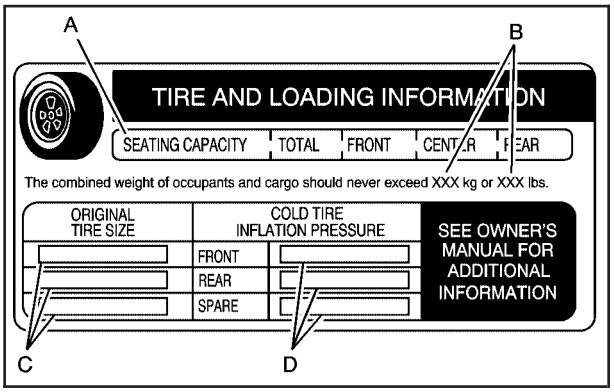

Label Example

A vehicle specific Tire and Loading Information label is attached to the center pillar (B-pillar). With the driver's door open, you will find the label attached below the door lock post (striker). The tire and loading information label shows the number of occupant seating positions (A), and the maximum vehicle capacity weight (B) in kilograms and pounds.

The Tire and Loading Information label also shows the size of the original equipment tires (C) and the recommended cold tire inflation pressures (D). For more information on tires and inflation see *Tires on page 5-72* and *Inflation - Tire Pressure on page 5-79*.

There is also important loading information on the vehicle Certification/Tire label. It tells you the Gross Vehicle Weight Rating (GVWR) and the Gross Axle Weight Rating (GAWR) for the front and rear axles. See “Certification/Tire Label” later in this section.

Steps for Determining Correct Load Limit

1. Locate the statement “The combined weight of occupants and cargo should never exceed XXX kg or XXX pounds” on your vehicle’s placard.
2. Determine the combined weight of the driver and passengers that will be riding in your vehicle.
3. Subtract the combined weight of the driver and passengers from XXX kilograms or XXX pounds.
4. The resulting figure equals the available amount of cargo and luggage load capacity. For example, if the “XXX” amount equals 1400 lbs and there will be five 150 lb passengers in your vehicle, the amount of available cargo and luggage load capacity is 650 lbs (1400 – 750 (5 x 150) = 650 lbs).
5. Determine the combined weight of luggage and cargo being loaded on the vehicle. That weight may not safely exceed the available cargo and luggage load capacity calculated in Step 4.
6. If your vehicle will be towing a trailer, the load from your trailer will be transferred to your vehicle. Consult this manual to determine how this reduces the available cargo and luggage load capacity of your vehicle. See *Towing a Trailer on page 4-68* for important information on towing a trailer, towing safety rules and trailering tips.

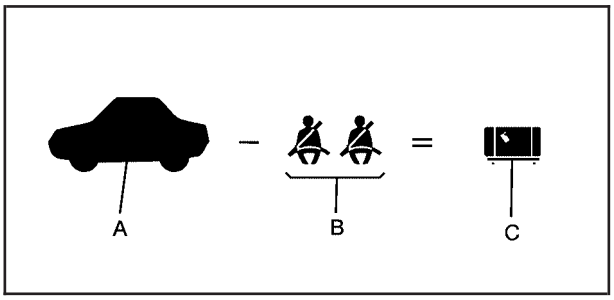

Example 1

Item	Description	Total
A	Vehicle Capacity Weight for Example 1 =	1,000 lbs (453 kg)
B	Subtract Occupant Weight 150 lbs (68 kg) × 2 =	300 lbs (136 kg)
C	Available Occupant and Cargo Weight =	700 lbs (317 kg)

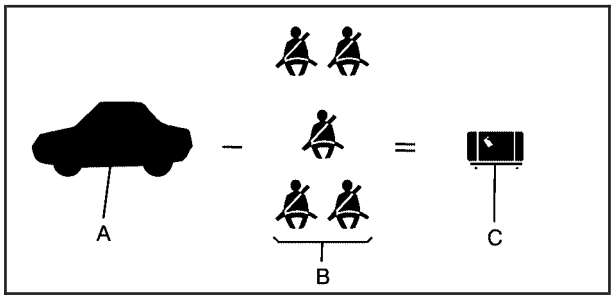

Example 2

Item	Description	Total
A	Vehicle Capacity Weight for Example 2 =	1,000 lbs (453 kg)
B	Subtract Occupant Weight 150 lbs (68 kg) × 5 =	750 lbs (136 kg)
C	Available Cargo Weight =	250 lbs (113 kg)

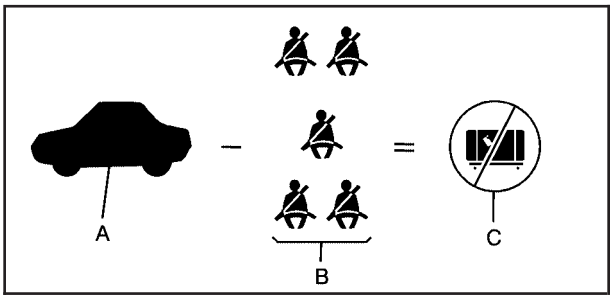

Example 3

Item	Description	Total
A	Vehicle Capacity Weight for Example 3 =	1,000 lbs (453 kg)
B	Subtract Occupant Weight 200 lbs (91 kg) × 5 =	1,000 lbs (453 kg)
C	Available Cargo Weight =	0 lbs (0 kg)

Refer to your vehicle's tire and loading information label for specific information about your vehicle's capacity weight and seating positions. The combined weight of the driver, passengers and cargo should never exceed your vehicle's capacity weight.

Certification/Tire Label

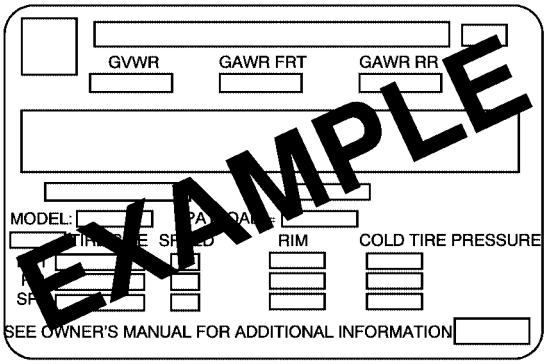

A vehicle specific Certification/Tire label is found on the rear edge of the driver's door. The label shows the size of your vehicle's original tires and the inflation pressures needed to obtain the gross weight capacity of your vehicle. This is called Gross Vehicle Weight Rating (GVWR). The GVWR includes the weight of the vehicle, all occupants, fuel and cargo.

The Certification/Tire label also tells you the maximum weights for the front and rear axles, called Gross Axle Weight Rating (GAWR). To find out the actual loads on your front and rear axles, you need to go to a weigh station and weigh your vehicle. Your dealer can help you with this. Be sure to spread out your load equally on both sides of the centerline.

Never exceed the GVWR for your vehicle, or the GAWR for either the front or rear axle.

The Certification/Tire label also contains important information about your Front Axle Reserve Capacity. See "What is front axle reserve capacity, and how do I calculate it?" under *Adding a Snow Plow or Similar Equipment on page 4-56*.

⚠ CAUTION:

In the case of a sudden stop or collision, things carried in the bed of your truck could shift forward and come into the passenger area, injuring you and others. If you put things in the bed of your truck, you should make sure they are properly secured.

⚠ CAUTION:

Do not load your vehicle any heavier than the Gross Vehicle Weight Rating (GVWR), or either the maximum front or rear Gross Axle Weight Rating (GAWR). If you do, parts on your vehicle can break, and it can change the way your vehicle handles. These could cause you to lose control and crash. Also, overloading can shorten the life of your vehicle.

Notice: **Overloading your vehicle may cause damage. Repairs would not be covered by your warranty. Do not overload your vehicle.**

Using heavier suspension components to get added durability might not change your weight ratings. Ask your dealer to help you load your vehicle the right way.

If you put things inside your vehicle—like suitcases, tools, packages, or anything else—they go as fast as the vehicle goes. If you have to stop or turn quickly, or if there is a crash, they'll keep going.

⚠ CAUTION:

Things you put inside your vehicle can strike and injure people in a sudden stop or turn, or in a crash.

- **Put things in the cargo area of your vehicle. Try to spread the weight evenly.**
- **Never stack heavier things, like suitcases, inside the vehicle so that some of them are above the tops of the seats.**
- **Do not leave an unsecured child restraint in your vehicle.**
- **When you carry something inside the vehicle, secure it whenever you can.**
- **Do not leave a seat folded down unless you need to.**

There's also important loading information for off-road driving in this manual. See "Loading Your Vehicle for Off-Road Driving" under *Off-Road Driving with Your Four-Wheel-Drive Vehicle on page 4-20*.

Two-Tiered Loading

By positioning four 2” x 6” wooden planks across the width of the pickup box, you can create an upper load platform. The planks must be inserted in the pickup box depressions. The length of the planks must allow for at least a 3/4 inch (2 cm) bearing surface on each end of the plank.

When using this upper load platform, be sure the load is securely tied down to prevent it from shifting. The load’s center of gravity should be positioned in a zone over the rear axle. The zone is located in the area between the front of each wheel well and the rear of each wheel well. The center of gravity height must not extend above the top of the pickup box flareboard.

Any load that extends beyond the vehicle’s taillamp area must be properly marked according to local laws and regulations.

Remember not to exceed the Gross Axle Weight Rating (GAWR) of the front or rear axle.

Add-On Equipment

When you carry removable items, you may need to put a limit on how many people you carry inside your vehicle. Be sure to weigh your vehicle before you buy and install the new equipment.

Notice: **Overloading your vehicle may cause damage. Repairs would not be covered by your warranty. Do not overload your vehicle.**

Remember not to exceed the Gross Axle Weight Rating (GAWR) of the front or rear axle.

*Equipment	Maximum Weight
Ladder Rack and Cargo	750 lbs (340 kg)
Cross Toolbox and Cargo	400 lbs (181 kg)
Side Boxes and Cargo	250 lbs per side (113 kg per side)
*The combined weight for all rail-mounted equipment should not exceed 1,000 lbs (454 kg), excluded 1500 crew cab models (with 5’ 8” box length.) A reinforcement kit for rail-mounted add-on equipment is recommended. See your dealer. Ladder racks are not recommended for 1500 crew cab models (with 5’8” pick-up box length.) Maximum recommended cross-mounted toolbox and cargo weight is 300 lbs (136 kg) for the 1500 crew cab (with 5’8” pick-up box length.)	

Adding a Snow Plow or Similar Equipment

Before installing a snow plow on your vehicle, here are some things you will need to know:

Notice: **If your vehicle does not have the snow plow prep package, adding a plow can damage your vehicle, and the repairs would not be covered by warranty. Unless your vehicle was built to carry a snow plow, do not add one to your vehicle. If your vehicle has the snow plow option called RPO VYU (snow plow prep package), then the payload your vehicle can carry will be reduced when a snow plow is installed. Your vehicle can be damaged if either the front or rear axle ratings, or the GVW, are exceeded.**

Q: How do I know if my vehicle can handle a snow plow?

A: Some vehicles are built with a special package, called RPO VYU (snow plow prep package). If your vehicle has this option, you can add a plow to it, provided certain weights, such as the weights on the vehicle's axles and the GVW, are not exceeded.

Q: How heavy can a snow plow safely be?

A: The plow your vehicle can carry depends on many things, such as:

- The options your vehicle came with, and the weight of those options,
- The weight and number of passengers you intend to carry,
- The weight of items you have added to your vehicle, like a tool box or truck cap,
- The total weight of any additional cargo you intend to carry.

Say, for example, you have a 700 lb (318 kg) snow plow. The total weight of all occupants and cargo inside the cab should not exceed 300 lb (135 kg). This means that you may only be able to carry one passenger. But, even this may be too much if you have got other equipment already adding to the weight of your vehicle.

Here are some guidelines for safely carrying a snow plow on your vehicle:

- Make sure the weight on the front and rear axles does not exceed the axle rating for each.
- For the front axle, if more cargo or passengers must be carried, appropriate counter ballast must be installed rear of the rear axle. Counter ballast must be properly secured so it will not move during driving.
- Follow the snow plow manufacturer's recommendations regarding rear ballast. Rear ballast may be required to ensure a proper front and rear weight distribution ratio, even though the actual weight at the front axle may be less than the front axle rating.
- The snow plow manufacturer or installer can assist you in determining the amount of rear ballast required, to help make sure your snowplow/vehicle combination does not exceed the GVW rating, the front and rear axle ratings, and the front and rear weight distribution ratio.
- The total vehicle must not exceed the GVW rating.

Q: What is front axle reserve capacity, and how do I calculate it?

A: Front axle reserve capacity is the difference between your front GAWR and the front axle weight of your truck with full fuel and passengers. Basically, it is the amount of weight you can add to your front axle before reaching your front GAWR.

The front axle reserve capacity for your vehicle can be found in the lower right corner of the Certification/Tire label, as shown.

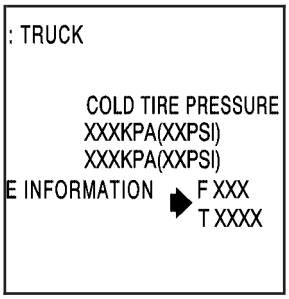

United States

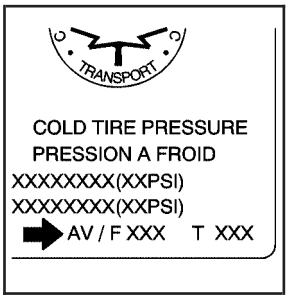

Canada

In order to calculate the amount of weight any front accessory, such as a snow plow, is adding to the front axle, use the following formula:

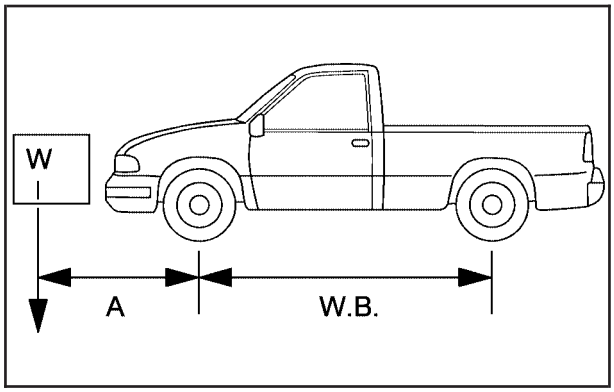

(W x (A + W.B.)) /W.B.= Weight the accessory is adding to the front axle.

Where:

W = Weight of added accessory

A = Distance that the accessory is in front of the front axle

W.B. = Vehicle Wheelbase

For example, adding a 700 lb (318 kg) snow plow actually adds more than 700 lbs (318 kg) to the front axle. Using the formula, if the snow plow is 4 ft (122 cm) in front of the front axle and the wheel base is 10 ft (305 cm), then:

W = 700 lb (318 kg)

A = 4 ft (122 cm)

W.B. = 10 ft (305 cm)

(W x (A + W.B.))/W.B. = (700 x (4 + 10))/10 = 980 lbs (445 kg)

So, if your truck's front axle reserve capacity is more than 980 lbs (445 kg), you could add the snow plow without exceeding the front GAWR.

Q: What if I want to add heavier equipment to my vehicle?

A: You can add heavier equipment on the front of the vehicle if you compensate for it by carrying fewer passengers, less cargo, or by positioning cargo towards the rear. This has the effect of reducing the load on the front. However, the front GAWR, rear GAWR and the GVWR must never be exceeded.

⚠ CAUTION:

On some vehicles equipped with certain front mounted equipment, such as a snow plow, it may be possible to load the front axle to the front GAWR but not have enough weight on the rear axle to have proper braking performance. If your brakes can not work properly, you could have a crash. To help your brakes work properly when a snow plow is installed, always follow the snow plow manufacturer or installer's recommendation for rear ballast to ensure a proper front and rear weight distribution ratio, even though the actual front weight may be less than the front GAWR, and the total vehicle weight is less than the GVWR. Maintaining a proper front and rear weight distribution ratio is necessary to provide proper braking performance.

Q: What is total vehicle reserve capacity?

A: This is the difference between your GVWR and the weight of your truck with full fuel and passengers. It is the amount of weight you can add to your vehicle before reaching your GVWR. Keep in mind that reserve capacity numbers are intended as a guide when selecting the amount of equipment or cargo your truck can carry. If you are unsure of your truck's front, rear or total weight, go to a weigh station and weigh your vehicle. Your dealer can also help you with this.

The total vehicle reserve capacity for your vehicle can be found in the lower right corner of the Certification/Tire label as shown previously.

See your dealer for additional advice and information about using a snow plow on your vehicle. Also, see *Loading Your Vehicle on page 4-50*.

Truck-Camper Loading Information

This label is inside your glove box. It will tell you if your vehicle can carry a slide-in camper, how much of a load your vehicle can carry, and how to correctly spread out your load. Also, it will help you match the right slide-in camper to your vehicle.

When you carry a slide-in camper, the total cargo load of your vehicle is the weight of the camper, plus the following:

- Everything else added to the camper after it left the factory
- Everything in the camper
- All the people inside

The Cargo Weight Rating (CWR) is the maximum weight of the load your vehicle can carry. It doesn't include the weight of the people inside. But, you can figure about 150 lbs (68 kg) for each seat.

The total cargo load must not be more than your vehicle's CWR.

Refer to the Truck-Camper Loading Information label in glove box for dimensions A and B as shown in the following illustration.

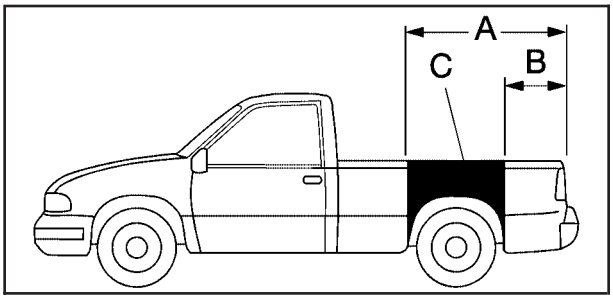

Use the rear edge of the load floor for measurement purposes. The recommended location for the cargo center of gravity is at point C for the CWR. It is the point where the mass of a body is concentrated and, if suspended at that point, would balance the front and rear.

Here is an example of proper truck and camper match:

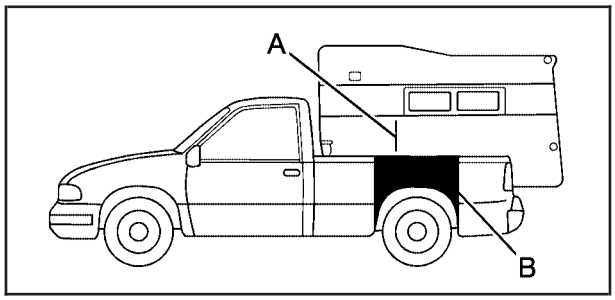

A. Camper Center of Gravity

B. Recommended Center of Gravity Location Zone

The camper's center of gravity should fall within the center of gravity zone for your vehicle's cargo load.

You must weigh any accessories or other equipment that you add to your vehicle. Then, subtract this extra weight from the CWR. This extra weight may shorten the center of gravity zone of your vehicle. Your dealer can help you with this.

If your slide-in camper and its load weighs less than the CWR, the center of gravity zone for your vehicle may be larger.

Your dealer can help you make a good vehicle-camper match. He'll also help you determine your CWR.

After you've loaded your vehicle and camper, drive to a weigh station and weigh the front and rear wheels separately. This will tell you the loads on your axles. The loads on the front and rear axles shouldn't be more than either of the GAWRs. The total of the axle loads should not be more than the GVWR.

Open your driver's door and look at the Certification/Tire label to find out your GAWR and GVWR.

If you've gone over your weight ratings, move or take out some things until all the weight falls below the ratings. Of course, you should always tie down any loose items when you load your vehicle or camper.

When you install and load your slide-in camper, check the manufacturer's instructions.

If you want more information on curb weights, cargo weights, Cargo Weight Rating and the correct center of gravity zone for your vehicle, your dealer can help you. Just ask for a copy of "Consumer Information, Truck-Camper Loading."

Pickup Conversion to Chassis Cab

General Motors is aware that some vehicle owners may consider having the pickup box removed and a commercial or recreational body installed. Before you do so, first contact GM Customer Assistance for information on such conversions specific to this vehicle. Owners should be aware that, as manufactured, there are differences between a chassis cab and a pickup with the box removed which may affect vehicle safety. The components necessary to adapt a pickup to permit its safe use with a specialized body should be installed by a body builder in accordance with the information available from GM Customer Assistance. See *Customer Assistance Offices on page 7-4*.

Towing

Towing Your Vehicle

Consult your dealer or a professional towing service if you need to have your disabled vehicle towed. See *Roadside Assistance Program on page 7-5*.

If you want to tow your vehicle behind another vehicle for recreational purposes (such as behind a motorhome), see “Recreational Vehicle Towing” following.

Recreational Vehicle Towing

Recreational vehicle towing means towing your vehicle behind another vehicle – such as behind a motorhome. The two most common types of recreational vehicle towing are known as dinghy towing, towing your vehicle will all four wheels on the ground, and dolly towing, towing your vehicle with two wheels on the ground and two wheels up on a device known as a “dolly”.

With the proper preparation and equipment, many vehicles can be towed in these ways. See “Dinghy Towing” and “Dolly Towing” following.

Here are some important things to consider before you do recreational vehicle towing:

- What’s the towing capacity of the towing vehicle? Be sure you read the tow vehicle manufacturer’s recommendations.
- How far will you tow? Some vehicles have restrictions on how far and how long they can tow.
- Do you have the proper towing equipment? See your dealer or trailering professional for additional advice and equipment recommendations.
- Is your vehicle ready to be towed? Just as you would prepare your vehicle for a long trip, you’ll want to make sure your vehicle is prepared to be towed. See *Before Leaving on a Long Trip on page 4-41*.

Dinghy Towing

Two-Wheel-Drive Vehicles

Notice: **If you tow your vehicle with all four wheels on the ground, the drivetrain components could be damaged. The repairs would not be covered by your warranty. Do not tow your vehicle with all four wheels on the ground.**

Two-wheel-drive vehicles should not be towed with all four wheels on the ground. Two-wheel-drive transmissions have no provisions for internal lubrication while being towed.

Four-Wheel-Drive Vehicles Equipped with Transfer Case (NP1, NP2 and NP8)

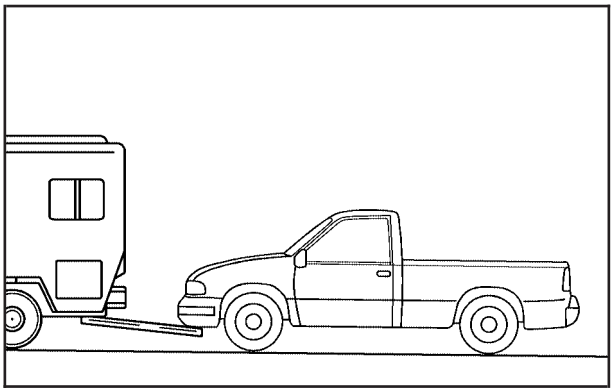

Use the following procedure to tow your vehicle:

1. Shift an automatic transmission to PARK (P), or a manual transmission to FIRST (1).
2. Turn the engine off, but leave the ignition on.
3. Firmly set the parking brake.

4. Securely attach the vehicle being towed to the tow vehicle.

⚠ CAUTION:

Shifting a four-wheel-drive vehicle's transfer case into NEUTRAL can cause your vehicle to roll even if the transmission is in Park (P) for an automatic transmission, or if your vehicle is in gear, for a manual transmission. You or others could be injured. Make sure the parking brake is firmly set before you shift the transfer case to NEUTRAL.

5. Shift the transfer case to NEUTRAL. See *Four-Wheel Drive on page 2-37* for the proper procedure to select the neutral position for your vehicle.
6. Release the parking brake only after the vehicle being towed is firmly attached to the towing vehicle.
7. Turn the ignition off and leave the steering column unlocked.

Dolly Towing

Front Towing (Front Wheels Off the Ground)

Two-Wheel-Drive Vehicles

Notice: **If you tow a two-wheel-drive vehicle with the rear wheels on the ground, the transmission could be damaged. The repairs would not be covered by your warranty. Never tow your vehicle with the rear wheels on the ground.**

Two-wheel-drive vehicles should not be towed with the rear wheels on the ground. Two-wheel-drive transmissions have no provisions for internal lubrication while being towed.

To dolly tow a two-wheel-drive vehicle, you must tow the vehicle with the rear wheels on the dolly. See "Rear Towing (Rear Wheels Off the Ground)" later in this section for more information.

Four-Wheel-Drive Vehicles

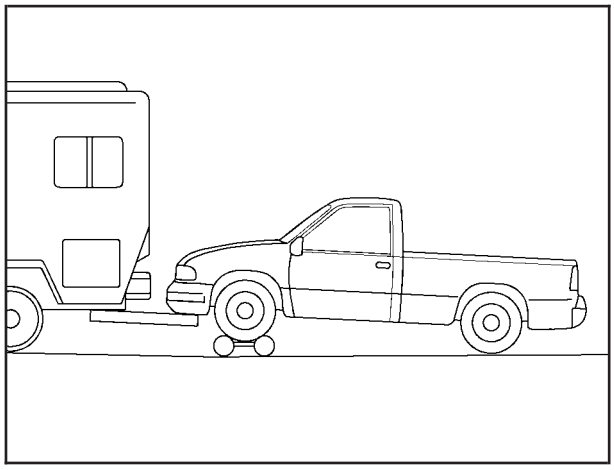

Use the following procedure to tow your vehicle:

1. Drive the vehicle up onto the tow dolly.
2. Shift an automatic transmission to PARK (P), or a manual transmission to FIRST (1).
3. Turn the engine off, but leave the ignition on.
4. Firmly set the parking brake.
5. Securely attach the vehicle being towed to the tow dolly.

⚠ CAUTION:

Shifting a four-wheel-drive vehicle's transfer case into NEUTRAL can cause your vehicle to roll even if the transmission is in Park (P) for an automatic transmission, or if your vehicle is in gear, for a manual transmission. You or others could be injured. Make sure the parking brake is firmly set before you shift the transfer case to NEUTRAL.

6. Shift the transfer case to NEUTRAL. See *Four-Wheel Drive on page 2-37* for the proper procedure to select the neutral position for your vehicle.
7. Release the parking brake only after the vehicle being towed is firmly attached to the towing vehicle.
8. Turn the ignition off and lock the steering column.

Rear Towing (Rear Wheels Off the Ground)

Two-Wheel-Drive Vehicles

Use the following procedure to tow your vehicle from the rear:

1. Drive the vehicle onto the dolly.
2. Firmly set the parking brake. See *Parking Brake on page 2-48.*
3. Put an automatic transmission in PARK (P) or a manual transmission in FIRST (1).
4. Follow the dolly manufacturer's instructions to attach and secure the vehicle being towed to the dolly and then the loaded dolly to the tow vehicle. Make sure the wheels are straight before towing.

   For manual transmission vehicles, make sure the wheels are straight before proceeding to the next steps. On automatic transmission vehicles, use an adequeate clamping device to ensure that the front wheels are locked into the straight position.
5. Release the parking brake only after the vehicle being towed is firmly attached to the tow vehicle.
6. Turn the ignition to LOCK.

Four-Wheel-Drive Vehicles

Use the following procedure to tow your vehicle from the rear:

1. Drive the vehicle onto the dolly.
2. Firmly set the parking brake. See *Parking Brake on page 2-48.*
3. Put an automatic transmission in PARK (P) or a manual transmission in FIRST (1).
4. Follow the dolly manufacturer's instructions to attach and secure the vehicle being towed to the dolly and then the loaded dolly to the tow vehicle.

   For manual transmission vehicles, make sure the wheels are straight before proceeding to the next steps. On automatic transmission vehicles, use an adequeate clamping device to ensure that the front wheels are locked into the straight position.

⚠ CAUTION:

Shifting a four-wheel-drive vehicle's transfer case into NEUTRAL can cause your vehicle to roll even if the transmission is in Park (P) for an automatic transmission, or if your vehicle is in gear, for a manual transmission. You or others could be injured. Make sure the parking brake is firmly set before you shift the transfer case to NEUTRAL.

5. Shift the transfer case to NEUTRAL. See *Four-Wheel Drive on page 2-37.*
6. Release the parking brake only after the vehicle being towed is firmly attached to the tow vehicle.
7. Turn the ignition to LOCK.

Trailer Recommendations

You must subtract your hitch loads from the CWR for your vehicle. Weigh your vehicle with the trailer attached, so that you won't go over the GVWR or GAWR. If you are using a weight-distributing hitch, weigh the vehicle without the spring bars in place.

You'll get the best performance if you spread out the weight of your load the right way, and if you choose the correct hitch and trailer brakes.

For more information, see *Towing a Trailer on page 4-68*.

Towing a Trailer

Do not tow a trailer during break-in. See *New Vehicle Break-In on page 2-21.*

⚠ CAUTION:

If you do not use the correct equipment and drive properly, you can lose control when you pull a trailer. For example, if the trailer is too heavy, the brakes may not work well — or even at all. You and your passengers could be seriously injured. Pull a trailer only if you have followed all the steps in this section. Ask your dealer for advice and information about towing a trailer with your vehicle.

Notice: **Pulling a trailer improperly can damage your vehicle and result in costly repairs not covered by your warranty. To pull a trailer correctly, follow the advice in this part, and see your dealer for important information about towing a trailer with your vehicle.**

To identify the vehicle trailering capacity of your vehicle, you should read the information in "Weight of the Trailer" that appears later in this section.

If yours was built with trailering options, as many are, it's ready for heavier trailers. But trailering is different than just driving your vehicle by itself. Trailering means changes in acceleration, braking, handling, durability and fuel economy. Successful, safe trailering takes correct equipment, and it has to be used properly.

That's the reason for this part. In it are many time-tested, important trailering tips and safety rules. Many of these are important for your safety and that of your passengers. So please read this section carefully before you pull a trailer.

If You Do Decide To Pull A Trailer

If you do, here are some important points:

- There are many different laws, including speed limit restrictions, having to do with trailering. Make sure your rig will be legal, not only where you live but also where you'll be driving. A good source for this information can be state or provincial police.
- Consider using a sway control. See "Hitches" later in this section.
- Don't tow a trailer at all during the first 500 miles (800 km) your new vehicle is driven. Your engine, axle or other parts could be damaged.

- Then, during the first 500 miles (800 km) that you tow a trailer, don't drive over 50 mph (80 km/h) and don't make starts at full throttle. This helps your engine and other parts of your vehicle wear in at the heavier loads.
- If you have an automatic transmission, you can tow in DRIVE (D). You may want to shift the transmission to THIRD (3) or, if necessary, a lower gear selection if the transmission shifts too often, such as under heavy loads and/or hilly conditions. If you have a manual transmission and you are towing a trailer, it's better not to use the highest gear. See *Tow/Haul Mode Light on page 3-49*.

Three important considerations have to do with weight:

- The weight of the trailer
- The weight of the trailer tongue
- The weight on your vehicle's tires

Tow/Haul Mode

Tow/Haul is a feature on automatic transmission equipped vehicles that assists when pulling a heavy trailer or a large or heavy load. Tow/Haul mode adjusts the transmission's shift pattern to reduce shift cycling (rapid up and downshifts/gear hunting), providing increased performance, vehicle control, and transmission cooling when towing or hauling heavy loads.

Automatic transmission equipped vehicles are provided with a button at the end of the shift lever which when pressed enables Tow/Haul. When the button is pressed, a light on the instrument panel will illuminate to indicate that Tow/Haul has been selected. Tow/Haul may be turned off by pressing the button again, at which time the indicator light on the instrument panel will turn off. The vehicle will automatically turn off Tow/Haul every time it is started.

Tow/Haul is designed to be most effective when the vehicle and trailer combined weight is at least 75 percent of the vehicle's Gross Combined Weight Rating (GCWR). See "Weight of the Trailer" later in the section. Tow/Haul is most useful under the following driving conditions:

- When pulling a heavy trailer or a large or heavy load through rolling terrain.
- When pulling a heavy trailer or a large or heavy load in stop and go traffic.
- When pulling a heavy trailer or a large or heavy load in busy parking lots where improved low speed control of the vehicle is desired.

Operating the vehicle in Tow/Haul when lightly loaded or with no trailer at all will not cause damage. However, there is no benefit to the selection of Tow/Haul when the vehicle is unloaded. Such a selection when unloaded may result in unpleasant engine and transmission driving characteristics and reduced fuel economy. Tow/Haul is recommended only when pulling a heavy trailer or a large or heavy load.

Weight of the Trailer

How heavy can a trailer safely be?

It depends on how you plan to use your rig. For example, speed, altitude, road grades, outside temperature and how much your vehicle is used to pull a trailer are all important. And, it can also depend on any special equipment that you have on your vehicle.

Use one of the following charts to determine how much your vehicle can weigh, based upon your vehicle model and options.

Maximum trailer weight is calculated assuming the driver and one passenger are in the tow vehicle and it has all the required trailering equipment. The weight of additional optional equipment, passengers and cargo in the tow vehicle must be subtracted from the maximum trailer weight.

Above the 5,000 lb (2 268 kg) trailer rating, the handling/trailering suspension is required on C-1500 models and the handling/trailering or off-road suspension is required on K-1500 models.

Vehicle*	Axle Ratio	Maximum Trailer Weight	GCWR
C-1500 Regular Cab Short Box (2WD)*			
4300 V6 (Auto)	3.23	4,900 lbs (2 223 kg)	9,500 lbs (4 309 kg)
4300 V6 (Manual)	3.23	3,800 lbs (1 724 kg)	8,500 lbs (3 855 kg)
4800 V8 (Auto)	3.23 3.73	6,300 lbs (2 858 kg) 7,300 lbs (3 311 kg)	11,000 lbs (4 994 kg) 12,000 lbs (5 443 kg)
4800 V8 (Manual)	3.23 3.73	4,300 lbs (1 950 kg) 5,300 lbs (2 404 kg)	9,000 lbs (4 082 kg) 10,000 lbs (4 535 kg)
5300 V8	3.23 3.73	7,300 lbs (3 311 kg) 8,300 lbs (3 765 kg)	12,000 lbs (5 443 kg) 13,000 lbs (5 897 kg)
*Fifth-wheel or gooseneck kingpin weight 15 percent to 25 percent of trailer weight up to 1,500 lbs (680 kg) maximum.			

Vehicle*	Axle Ratio	Maximum Trailer Weight	GCWR
C-1500 Extended Cab Short Box (2WD)*			
4300 V6 (Auto)	3.23 3.73	4,600 lbs (2 087 kg) 5,100 lbs (2 313 kg)	9,500 lbs (4 309 kg) 10,000 lbs (4 536 kg)
4300 V6 (Manual)	3.23	3,600 lbs (1 633 kg)	8,500 lbs (3 859 kg)
4800 V8 (Auto)	3.23 3.73	6,000 lbs (2 722 kg) 7,000 lbs (3 175 kg)	11,000 lbs (4 990 kg) 12,000 lbs (5 443 kg)
4800 V8 (Manual)	3.23 3.73	4,000 lbs (1 814 kg) 5,000 lbs (2 268 kg)	9,000 lbs (4 086 kg) 10,000 lbs (4 540 kg)

Vehicle*	Axle Ratio	Maximum Trailer Weight	GCWR
5300 V8	3.23 3.73	7,000 lbs (3 175 kg) 8,000 lbs (3 629 kg)**	12,000 lbs (5 443 kg) 13,000 lbs (5 897 kg)
5300 V8 w/4WS	3.73 4.10	7,600 lbs (3 447 kg)*** 8,600 lbs (3 901 kg)***	13,000 lbs (5 897 kg) 14,000 lbs (6 350 kg)
*Fifth-wheel or gooseneck kingpin weight 15 percent to 25 percent of trailer weight up to 1,500 lbs (680 kg) maximum. **Maximum 8,000 lbs (3 628 kg) for fifth-wheel or gooseneck. ***Maximum 7,500 lbs (3 401 kg) for fifth-wheel or gooseneck.			

Vehicle*	Axle Ratio	Maximum Trailer Weight	GCWR
C-1500 HD (2WD)*			
6000 V8	3.73 4.10	8,200 lbs (3 719 kg) 10,200 lbs (4 627 kg)	14,000 lbs (6 350 kg) 16,000 lbs (7 257 kg)
6000 V8 w/4WS	3.73 4.10	7,900 lbs (3 583 kg) 9,900 lbs (4 491 kg)	14,000 lbs (6 350 kg) 16,000 lbs (7 257 kg
*Fifth-wheel or gooseneck kingpin weight 15 percent to 25 percent of trailer weight up to 2,500 lbs (1 133 kg) maximum.			

Vehicle**	Axle Ratio	Maximum Trailer Weight	GCWR
C-1500 Crew Cab (2WD)*			
5300 V8	3.23 3.73	6,700 lbs (3 039 kg) 7,700 lbs (3 493 kg)	12,000 lbs (5 443 kg) 13,000 lbs (5 897 kg)
**Fifth-wheel or gooseneck trailering is neither designed nor intended for this vehicle.			

Vehicle*	Axle Ratio	Maximum Trailer Weight	GCWR
C-1500 Regular Cab Long Box (2WD)*			
4300 V6 (Auto)	3.23	4,800 lbs (2 177 kg)	9,500 lbs (4 313 kg)
4300 V6 (Manual)	3.23	3,800 lbs (1 724 kg)	8,500 lbs (3 859 kg)
4800 V8 (Auto)	3.23 3.73	6,200 lbs (2 812 kg) 7,200 lbs (3 266 kg)	11,000 lbs (4 994 kg) 12,000 lbs (5 448 kg)
4800 V8 (Manual)	3.23 3.73	4,200 lbs (1 905 kg) 5,200 lbs (2 359 kg)	9,000 lbs (4 086 kg) 10,000 lbs (4 540 kg)
5300 V8	3.23 3.73	7,200 lbs (3 266 kg) 8,200 lbs (3 719 kg)	12,000 lbs (5 448 kg) 13,000 lbs (5 902 kg)
*Fifth-wheel or gooseneck kingpin weight 15 percent to 25 percent of trailer weight up to 1,500 lbs (680 kg) maximum.			

Vehicle*	Axle Ratio	Maximum Trailer Weight	GCWR
C-1500 Extended Cab Long Box (2WD)*			
4800 V8 (Auto)	3.23 3.73	5,800 lbs (2 631 kg) 6,800 lbs (3 084 kg)	11,000 lbs (4 994 kg) 12,000 lbs (5 448 kg)
4800 V8 (Manual)	3.23 3.73	3,800 lbs (1 724 kg) 4,800 lbs (2 177 kg)	9,000 lbs (4 086 kg) 10,000 lbs (4 540 kg)
5300 V8	3.23 3.73	6,800 lbs (3 084 kg) 7,800 lbs (3 538 kg)	12,000 lbs (5 448 kg) 13,000 lbs (5 902 kg)
*Fifth-wheel or gooseneck kingpin weight 15 percent to 25 percent of trailer weight up to 1,500 lbs (680 kg) maximum.			

Vehicle*	Axle Ratio	Maximum Trailer Weight	GCWR
K-1500 Regular Cab Short Box (4WD)			
4300 V6 (Auto)	3.73	5,100 lbs (2 313 kg)	10,000 lbs (4 540 kg)
4300 V6 (Manual)	3.73	4,100 lbs (1 860 kg)	9,000 lbs (4 086 kg)
4800 V8 (Auto)	3.42 4.10	7,000 lbs (3 175 kg) 8,000 lbs (3 629 kg)	12,000 lbs (5 448 kg) 13,000 lbs (5 902 kg)
4800 V8 (Manual)	3.42 4.10	5,000 lbs (2 268 kg) 6,000 lbs (2 722 kg)	10,000 lbs (4 540 kg) 11,000 lbs (4 994 kg)
5300 V8	3.42 4.10	8,000 lbs (3 629 kg) 9,000 lbs (4 082 kg)	13,000 lbs (5 902 kg) 14,000 lbs (6 356 kg)
*Fifth-wheel or gooseneck kingpin weight 15 percent to 25 percent of trailer weight up to 1,500 lbs (680 kg) maximum.			

Vehicle*	Axle Ratio	Maximum Trailer Weight	GCWR
K-1500 Extended Cab Short Box (4WD)*			
4800 V8 (Auto)	3.42 4.10	6,700 lbs (3 039 kg) 7,700 lbs (3 493 kg)**	12,000 lbs (5 443 kg) 13,000 lbs (5 897 kg)
4800 V8 (Manual)	3.42 4.10	4,700 lbs (2 132 kg) 5,700 lbs (2 585 kg)	10,000 lbs (4 535 kg) 11,000 lbs (4 990 kg)
5300 V8	3.42 4.10	7,700 lbs (3 493 kg)** 8,700 lbs (3 946 kg)**	13,000 lbs (5 897 kg) 14,000 lbs (6 350 kg)
5300 V8 w/4WS	3.42 4.10	7,300 lbs (3 311 kg) 8,300 lbs (3 765 kg)	13,000 lbs (5 897 kg) 14,000 lbs (6 350 kg)
**Maximum weight 7,700 lbs (3 492 kg) for fifth-wheel or gooseneck.			

Vehicle*	Axle Ratio	Maximum Trailer Weight	GCWR
K-1500 HD (4WD)*			
6000 V8	3.73 4.10	7,900 lbs (3 583 kg) 9,900 lbs (4 491 kg)	14,000 lbs (6 350 kg) 16,000 lbs (7 257 kg)
6000 V8 w/4WS	3.73 4.10	7,600 lbs (3 447 kg) 9,600 lbs (4 354 kg)	14,000 lbs (6 356 kg) 16,000 lbs (7 264 kg)
*Fifth-wheel or gooseneck kingpin weight 15 percent to 25 percent of trailer weight up to 2,500 lbs (1 133 kg) maximum.			

Vehicle**	Axle Ratio	Maximum Trailer Weight	GCWR
K-1500 Crew Cab (4WD)*			
5300 V8	3.42 4.10	7,400 lbs (3 357 kg) 8,400 lbs (3 810 kg)	13,000 lbs (5 897 kg) 14,000 lbs (6 350 kg)
**Fifth-wheel or gooseneck trailering is neither designed nor intended for this vehicle.			

Vehicle*	Axle Ratio	Maximum Trailer Weight	GCWR
K-1500 Regular Cab Long Box (4WD)*			
4300 V6 (Auto)	3.73	5,000 lbs (2 268 kg)	10,000 lbs (4 536 kg)
4300 V6 (Manual)	3.73	4,000 lbs (1 814 kg)	9,000 lbs (4 082 kg)
4800 V8 (Auto)	3.42 4.10	6,900 lbs (3 130 kg) 7,900 lbs (3 583 kg)	12,000 lbs (5 443 kg) 13,000 lbs (5 897 kg)

Vehicle*	Axle Ratio	Maximum Trailer Weight	GCWR
4800 V8 (Manual)	3.73 4.10	4,900 lbs (2 223 kg) 5,900 lbs (2 676 kg)	10,000 lbs (4 536 kg) 11,000 lbs (4 990 kg)
5300 V8	3.73 4.10	7,900 lbs (3 583 kg) 8,900 lbs (4 037 kg)**	13,000 lbs (5 897 kg) 14,000 lbs (6 350 kg)
*Fifth-wheel or gooseneck kingpin weight 15 percent to 25 percent of trailer weight up to 1,500 lbs (680 kg) maximum. **Maximum weight 8,900 lbs (4 036 kg) for fifth-wheel and gooseneck.			

Vehicle*	Axle Ratio	Maximum Trailer Weight	GCWR
K-1500 Extended Cab Long Box (4WD)*			
4800 V8	3.42 4.10	6,600 lbs (2 993 kg) 7,600 lbs (3 447 kg)**	12,000 lbs (5 443 kg) 13,000 lbs (5 897 kg)
4800 V8 (Manual)	3.42 4.10	4,600 lbs (2 087 kg) 5,600 lbs (2 540 kg)	10,000 lbs (4 536 kg) 11,000 lbs (4 990 kg)
5300 V8	3.42 4.10	7,600 lbs (3 447 kg)** 8,600 lbs (3 900 kg)**	13,000 lbs (5 897 kg) 14,000 lbs (6 350 kg)
*Fifth-wheel or gooseneck kingpin weight should be 15 percent to 25 percent of trailer weight up to 1,500 lbs (680 kg) maximum. **Maximum weight 6,800 lbs (3 084 kg) for fifth-wheel and gooseneck.			

Vehicle*	Axle Ratio	Maximum Trailer Weight	GCWR
C-2500 Regular Cab Long Box HD (2WD)*			
6000 V8	4.10	10,600 lbs (4 808 kg)	16,000 lbs (7 257 kg)
8100 V8	3.73 4.10	12,000 lbs (5 443 kg) 12,000 lbs (5 443 kg)	20,000 lbs (9 072 kg) 22,000 lbs (9 979 kg)
6.6L V8 Diesel	3.73	12,000 lbs (5 443 kg)	22,000 lbs (9 979 kg)
C-2500 Extended Cab Short Box HD (2WD)*			
6000 V8	4.10	10,300 lbs (4 676 kg)	16,000 lbs (7 257 kg)
8100 V8	3.73 4.10	12,000 lbs (5 443 kg) 12,000 lbs (5 443 kg)	20,000 lbs (9 072 kg) 22,000 lbs (9 979 kg)
6.6L V8 Diesel	3.73	12,000 lbs (5 443 kg)	22,000 lbs (9 979 kg)
*Fifth-wheel or gooseneck kingpin weight should be 15 percent to 25 percent of trailer weight up to 3,000 lbs (1 361 kg) maximum.			

Vehicle*	Axle Ratio	Maximum Trailer Weight	GCWR
C-2500 Extended Cab Long Box HD (2WD)*			
6000 V8	4.10	10,100 lbs (4 581 kg)	16,000 lbs (7 257 kg)
8100 V8	3.73 4.10	12,000 lbs (5 443 kg) 12,000 lbs (5 443 kg)	20,000 lbs (9 072 kg) 22,000 lbs (9 979 kg)
6.6L V8 Diesel	3.73	12,000 lbs (5 443 kg)	22,000 lbs (9 979 kg)

Vehicle*	Axle Ratio	Maximum Trailer Weight	GCWR
C-2500 Crew Cab Short Box HD (2WD)**			
6000 V8	4.10	10,100 lbs (4 581 kg)	16,000 lbs (7 257 kg)
8100 V8	3.73 4.10	12,000 lbs (5 443 kg) 12,000 lbs (5 443 kg)	20,000 lbs (9 072 kg) 22,000 lbs (9 979 kg)
6.6L V8 Diesel	3.73	12,000 lbs (5 443 kg)	22,000 lbs (9 979 kg)
*Fifth-wheel or gooseneck kingpin weight should be 15 percent to 25 percent of trailer weight up to 3,000 lbs (1 361 kg) maximum.			

Vehicle*	Axle Ratio	Maximum Trailer Weight	GCWR
C-2500 Crew Cab Long Box HD (2WD)			
6000 V8	4.10	9,900 lbs (4 491 kg)	16,000 lbs (7 257 kg)
8100 V8	3.73 4.10	12,000 lbs (5 443 kg) 12,000 lbs (5 443 kg)	20,000 lbs (9 072 kg) 22,000 lbs (9 979 kg)
6.6L V8 Diesel	3.73	12,000 lbs (5 443 kg)	22,000 lbs (9 979 kg)
*Fifth-wheel or gooseneck kingpin weight should be 15 percent to 25 percent of trailer weight up to 3,000 lbs (1 361 kg) maximum.			

Vehicle*	Axle Ratio	Maximum Trailer Weight	GCWR
K-1500 HD (4WD)*			
6000 V8	3.73 4.10	7,900 lbs (3 583 kg) 9,900 lbs (4 491 kg)	14,000 lbs (6 350 kg) 16,000 lbs (7 257 kg)
6000 V8 w/4WS	3.73 4.10	7,600 lbs (3 447 kg) 9,600 lbs (4 354 kg)	14,000 lbs (6 350 kg) 16,000 lbs (7 257 kg)
*Fifth-wheel or gooseneck kingpin weight should be 15 percent to 25 percent of trailer weight up to 3,000 lbs (1 361 kg) maximum.			

Vehicle*	Axle Ratio	Maximum Trailer Weight	GCWR
K-2500 Regular Cab Long Box HD (4WD)*			
6000 V8	4.10	10,300 lbs (4 672 kg)	16,000 lbs (7 257 kg)
8100 V8	3.73 4.10	12,000 lbs (5 443 kg) 12,000 lbs (5 443 kg)	20,000 lbs (9 072 kg) 22,000 lbs (9 979 kg)
6.6L V8 Diesel	3.73	12,000 lbs (5 443 kg)	22,000 lbs (9 979 kg)
*Fifth-wheel or gooseneck kingpin weight should be 15 percent to 25 percent of trailer weight up to 3,000 lbs (1 361 kg) maximum.			

Vehicle*	Axle Ratio	Maximum Trailer Weight	GCWR
K-2500 Extended Cab Short Box HD (4WD)*			
6000 V8	4.10	10,000 lbs (4 536 kg)	16,000 lbs (7 257 kg)
8100 V8	3.73 4.10	12,000 lbs (5 443 kg) 12,000 lbs (5 443 kg)	20,000 lbs (9 072 kg) 22,000 lbs (9 979 kg)
6.6L V8 Diesel	3.73	12,000 lbs (5 443 kg)	22,000 lbs (9 979 kg)
*Fifth-wheel or gooseneck kingpin weight should be 15 percent to 25 percent of trailer weight up to 3,000 lbs (1 361 kg) maximum.			

Vehicle*	Axle Ratio	Maximum Trailer Weight	GCWR
K-2500 Extended Cab Long Box HD (4WD)**			
6000 V8	4.10	9,900 lbs (4 490 kg)	16,000 lbs (7 257 kg)
8100 V8	3.73 4.10	12,000 lbs (5 443 kg) 12,000 lbs (5 443 kg)	20,000 lbs (9 072 kg) 22,000 lbs (9 979 kg)
6.6L V8 Diesel	3.73	12,000 lbs (5 443 kg)	22,000 lbs (9 979 kg)

Vehicle*	Axle Ratio	Maximum Trailer Weight	GCWR
K-2500 Crew Cab Short Box HD (4WD)*			
6000 V8	4.10	9,800 lbs (4 445 kg)	16,000 lbs (7 257 kg)
8100 V8	3.73 4.10	12,000 lbs (5 443 kg) 12,000 lbs (5 443 kg)	20,000 lbs (9 072 kg) 22,000 lbs (9 979 kg)
6.6L V8 Diesel	3.73	12,000 lbs (5 443 kg)	22,000 lbs (9 979 kg)
*Fifth-wheel or gooseneck kingpin weight should be 15 percent to 25 percent of trailer weight up to 3,000 lbs (1 361 kg) maximum.			

Vehicle*	Axle Ratio	Maximum Trailer Weight	GCWR
K-2500 Crew Cab Long Box HD (4WD)			
6000 V8	4.10	9,600 lbs (4 354 kg)	16,000 lbs (7 257 kg)
8100 V8	3.73 4.10	12,000 lbs (5 443kg) 12,000 lbs (5 443kg)	20,000 lbs (9 072 kg) 22,000 lbs (9 979 kg)
6.6L V8 Diesel	3.73	12,000 lbs (5 443kg)	22,000 lbs (9 979 kg)
*Fifth-wheel or gooseneck kingpin weight should be 15 percent to 25 percent of trailer weight up to 3,000 lbs (1 361 kg) maximum.			

Vehicle*	Axle Ratio	Maximum Trailer Weight	GCWR
C-3500 Extended Cab (2WD)			
6000 V8	4.10	9,700 lbs (4 400 kg)	16,000 lbs (7 257 kg)
8100 V8	4.10	12,000 lbs (5 443 kg)**	22,000 lbs (9 979 kg)
6.6L V8 Diesel (Manual)	3.73	12,000 lbs (5 443 kg)**	23,500 lbs (10 659 kg)
6.6L V8 Diesel (Auto)	3.73	12,000 lbs (5 443 kg)	23,500 lbs (10 659 kg)

Vehicle*	Axle Ratio	Maximum Trailer Weight	GCWR
C-3500 Crew Cab (2WD)*			
6000 V8	4.10	9,400 lbs (4 264 kg)	16,000 lbs (7 257 kg)
8100 V8	4.10	12,000 lbs (5 443 kg)**	22,000 lbs (9 979 kg)
6.6L V8 Diesel (Manual)	3.73	12,000 lbs (5 443 kg)**	22,500 lbs (10 659 kg)
6.6L V8 Diesel (Auto)	3.73	12,000 lbs (5 443 kg)	22,500 lbs (10 659 kg)
*Fifth-wheel or gooseneck kingpin weight should be 15 percent to 25 percent of trailer weight up to 3,500 lbs (1 587 kg) maximum.			
**Limited to 12,000 lbs (5 443 kg) with weight distributing hitch.			

Vehicle*	Axle Ratio	Maximum Trailer Weight	GCWR
K-3500 Regular Cab (4WD)			
6000 V8 Dual Rear Wheel	4.10	9,800 lbs (4 445 kg)	16,000 lbs (7 257 kg)
6000 V8 Single Rear Wheel	4.10	10,000 lbs (4 536 kg)	16,000 lbs (7 257 kg)
8100 V8 Dual Rear Wheel	4.10	12,000 lbs (5 443 kg)	22,000 lbs (9 979 kg)
8100 V8 Single Rear Wheel	4.10	12,000 lbs (5 443 kg)	22,000 lbs (9 979 kg)
6.6L V8 Dual Rear Wheel (Auto)	3.73	12,000 lbs (5 443 kg)	23,500 lbs (10 659 kg)
6.6L V8 Dual Rear Wheel (Manual)	3.73	12,000 lbs (5 443 kg)	23,500 lbs (10 659 kg)
6.6L V8 Single Rear Wheel	3.73	12,000 lbs (5 443 kg)	22,000 lbs (9 979 kg)

Vehicle*	Axle Ratio	Maximum Trailer Weight	GCWR
K-3500 Extended Cab (4WD)*			
6000 V8 Dual Rear Wheel	4.10	9,400 lbs (4 264 kg)	16,000 lbs (7 257 kg)
6000 V8 Single Rear Wheel	4.10	9,600 lbs (4 354 kg)	16,000 lbs (7 257 kg)
8100 V8 Dual Rear Wheel	4.10	12,000 lbs (5 443 kg)	22,000 lbs (9 979 kg)
8100 V8 Single Rear Wheel	4.10	12,000 lbs (5 443 kg)	22,000 lbs (9 979 kg)
6.6L V8 Diesel Dual Rear Wheel (Manual)	3.73	12,000 lbs (5 443 kg)	23,500 lbs (10 659 kg)
6.6L V8 Diesel Dual Rear Wheel (Auto)	3.73	12,000 lbs (5 443 kg)	23,500 lbs (10 659 kg)
6.6L V8 Diesel Single Rear Wheel	3.73	12,000 lbs (5 443 kg)	22,000 lbs (9 979 kg)
*Fifth-wheel or gooseneck kingpin weight should be 15 percent to 25 percent of trailer weight up to 3,500 lbs (1 587 kg) maximum.			

Vehicle*	Axle Ratio	Maximum Trailer Weight	GCWR
K-3500 Crew Cab (4WD)*			
6000 V8 Dual Rear Wheel	4.10	9,100 lbs (4 128 kg)	16,000 lbs (7 264 kg)
6000 V8 Single Rear Wheel	4.10	9,400 lbs (4 264 kg)	16,000 lbs (7 264 kg)
8100 V8 Dual Rear Wheel	4.10	12,000 lbs (5 443 kg)	22,000 lbs (9 979 kg)

Vehicle*	Axle Ratio	Maximum Trailer Weight	GCWR
8100 V8 Single Rear Wheel	4.10	12,000 lbs (5 443 kg)	22,000 lbs (9 979 kg)
6.6L V8 Diesel Single Rear Wheel (Auto)	3.73	12,000 lbs (5 443 kg)	22,000 lbs (9 979 kg)
6.6L V8 Diesel Single Rear Wheel (Manual)	3.73	12,000 lbs (5 443 kg)	22,000 lbs (9 979 kg)
6.6L V8 Diesel Dual Rear Wheel (Auto)	3.73	12,000 lbs (5 443 kg)	23,500 lbs (10 659 kg)
6.6L V8 Diesel Dual Rear Wheel (Manual)	3.73	12,000 lbs (5 443 kg)	23,500 lbs (10 659 kg)
*Fifth-wheel or gooseneck kingpin weight should be 15 percent to 25 percent of trailer weight up to 3,500 lbs (1 587 kg) maximum.			

The Gross Combination Weight Rating (GCWR) is the total allowable weight of the completely loaded vehicle and trailer including any passengers, cargo, equipment and conversions. The GCWR for your vehicle should not be exceeded.

You can ask your dealer for our trailering information or advice, or you can write us at the address listed in your Warranty and Owner Assistance Information Booklet.

In Canada, write to:

General Motors of Canada Limited
Customer Communications Centre, 163-005
1908 Colonel Sam Drive
Oshawa, Ontario L1H 8P7

Weight of the Trailer Tongue

The tongue load (A) of any trailer is an important weight to measure because it affects the total or gross weight of your vehicle. The Gross Vehicle Weight (GVW) includes the curb weight of the vehicle, any cargo you may carry in it, and the people who will be riding in the vehicle. If you have a lot of options, equipment, passengers or cargo in your vehicle, it will reduce the tongue weight your vehicle can carry, which will also reduce the trailer weight your vehicle can tow. And if you will tow a trailer, you must add the tongue load to the GVW because your vehicle will be carrying that weight, too. See *Loading Your Vehicle on page 4-50* for more information about your vehicle's maximum load capacity.

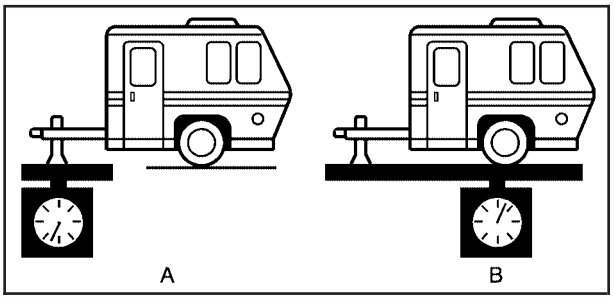

The trailer tongue weight (A) should be 10 percent to 15 percent of the total loaded trailer weight, up to a maximum of 600 lbs (272 kg) for the 1500 or 2500 series, and up to a maximum of 750 lbs (340 kg) for the 2500 HD or 3500 series with a weight carrying hitch. The trailer tongue weight (A) should be 10 percent to 15 percent of the total loaded trailer weight, up to a maximum of 1,000 lbs (453 kg) for the 1500 series and up to a maximum of 1,500 lbs (680 kg) for the 2500, 2500 HD or 3500 series with a weight distributing hitch.

Fifth wheel or gooseneck kingpin weight should be 15 to 25 percent of the trailer weight up to the maximum amount specified in the trailering chart for your vehicle. See "Weight of the Trailer", and "Fifth-Wheel and Gooseneck Trailering" in this section.

Do not exceed the maximum allowable tongue weight for your vehicle. Choose the shortest hitch extension that will position the hitch ball closest to the vehicle. This will help reduce the effect of trailer tongue weight on the rear axle.

After you have loaded the trailer, weigh the trailer and then the tongue separately, to see if the weights are proper. If they are not, you may be able to get them right by moving some items around in the trailer.

Total Weight on Your Vehicle's Tires

Be sure your vehicle's tires are inflated to the upper limit for cold tires. You'll find these numbers on the Certification label at the rear edge of the driver's door or see Loading Your Vehicle for more information. Then be sure you don't go over the GVW limit for your vehicle, or the GAWR, including the weight of the trailer tongue. If you use a weight distributing hitch, make sure you don't go over the rear axle limit before you apply the weight distribution spring bars.

Hitches

It's important to have the correct hitch equipment. Crosswinds, large trucks going by and rough roads are a few reasons why you'll need the right hitch.

Weight Distributing Hitches and Weight Carrying Hitches

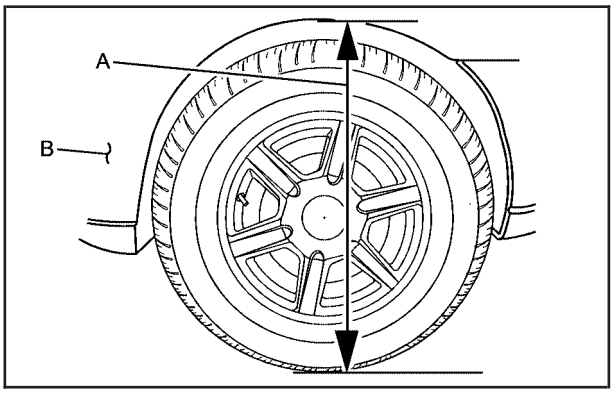

A: Body to Ground Distance

B: Front of Vehicle

When using a weight-distributing hitch, the hitch must be adjusted so the distance (A) remains the same both before and after coupling the trailer to the tow vehicle.

If you use a step-bumper hitch, the bumper could be damaged in sharp turns. Make sure there is ample room when turning to avoid contact between the trailer and the bumper.

If you will be pulling a trailer that, when loaded, will weigh more than 5,000 lbs (2 270 kg) be sure to use a properly mounted weight-distributing hitch and sway control of the proper size. This equipment is very important for proper vehicle loading and good handling when driving. Always use a sway control if the trailer will weigh more than these limits. You can ask a hitch dealer about sway controls.

Fifth Wheel and Gooseneck Trailering

Fifth wheel and gooseneck trailers can be used with many pickup models. These trailers place a larger percentage of the weight (kingpin weight) on the tow vehicle than conventional trailers. Make sure this weight does not cause the vehicle to exceed GAWR or GVWR.

Fifth wheel or gooseneck kingpin weight should be 15 to 25 percent of the trailer weight up to the maximum amount specified in the trailering chart for your vehicle. See “Weight of the Trailer” in this section for more information.

The hitch should be located in the pickup bed so that its centerline is over or slightly in front of the rear axle. Take care that it is not so far forward that it will contact the back of the cab in sharp turns. This is especially important for short box pickups. Trailer pin box extensions and sliding fifth wheel hitch assemblies can help this condition. There should be at least six inches of clearance between the top of the pickup box and the bottom of the trailer shelf that extends over the box.

Make sure the hitch is attached to the tow vehicle frame rails. Do not use the pickup box for support.

Safety Chains

You should always attach chains between your vehicle and your trailer. Cross the safety chains under the tongue of the trailer to help prevent the tongue from contacting the road if it becomes separated from the hitch. Instructions about safety chains may be provided by the hitch manufacturer or by the trailer manufacturer. If you are towing a trailer up to 5,000 lbs (2 271 kg) with a factory-installed step bumper, you may attach the safety chains to the attaching points on the bumper. If you are towing a trailer up to your vehicle's trailer rating limit you may attach the safety chains to the attaching point on the hitch platform. If you are towing with an aftermarket hitch follow the trailer or hitch manufacturer's recommendation for attaching safety chains. Always leave just enough slack so you can turn with your rig. Never allow safety chains to drag on the ground.

Trailer Brakes

If your trailer weighs more than 2,000 lbs (900 kg) loaded, then it needs its own brakes – and they must be adequate. Be sure to read and follow the instructions for the trailer brakes so you'll be able to install, adjust and maintain them properly.

Your trailer brake system can tap into the vehicle's hydraulic brake system only if:

- The trailer parts can withstand 3,000 psi (20 650 kPa) of pressure.
- The trailer's brake system will use less than 0.02 cubic inch (0.3 cc) of fluid from your vehicle's master cylinder. Otherwise, both braking systems won't work well. You could even lose your brakes.

If everything checks out this far, make the brake tap at the port on the master cylinder that sends the fluid to the rear brakes. But don't use copper tubing for this. If you do, it will bend and finally break off. Use steel brake tubing.

Driving with a Trailer

⚠ CAUTION:

If you have a rear-most window open and you pull a trailer with your vehicle, carbon monoxide (CO) could come into your vehicle. You cannot see or smell CO. It can cause unconsciousness or death. See *Engine Exhaust on page 2-53*. To maximize your safety when towing a trailer:

- **Have your exhaust system inspected for leaks, and make necessary repairs before starting on your trip.**
- **Keep the rear-most windows closed.**
- **If exhaust does come into your vehicle through a window in the rear or another opening, drive with your front, main heating or cooling system on and with the fan on any speed. This will bring fresh, outside air into your vehicle. Do not use the climate control setting for maximum air because it only recirculates the air inside your vehicle. See *Climate Control System on page 3-21*.**

Towing a trailer requires a certain amount of experience. Before setting out for the open road, you'll want to get to know your rig. Acquaint yourself with the feel of handling and braking with the added weight of the trailer. And always keep in mind that the vehicle you are driving is now a good deal longer and not nearly as responsive as your vehicle is by itself.

Before you start, check all trailer hitch parts and attachments, safety chains, electrical connector, lamps, tires and mirror adjustment. If the trailer has electric brakes, start your vehicle and trailer moving and then apply the trailer brake controller by hand to be sure the brakes are working. This lets you check your electrical connection at the same time.

During your trip, check occasionally to be sure that the load is secure, and that the lamps and any trailer brakes are still working.

While towing a trailer or when exposed to long periods of sunshine, the floor of the truck bed may become very warm. Avoid putting items in the truck bed that might be affected by high ambient temperatures.

Following Distance

Stay at least twice as far behind the vehicle ahead as you would when driving your vehicle without a trailer. This can help you avoid situations that require heavy braking and sudden turns.

Passing

You'll need more passing distance up ahead when you're towing a trailer. And, because you're a good deal longer, you'll need to go much farther beyond the passed vehicle before you can return to your lane.

Backing Up

Hold the bottom of the steering wheel with one hand. Then, to move the trailer to the left, just move that hand to the left. To move the trailer to the right, move your hand to the right. Always back up slowly and, if possible, have someone guide you.

Making Turns

Notice: **Making very sharp turns while trailering could cause the trailer to come in contact with the vehicle. Your vehicle could be damaged. Avoid making very sharp turns while trailering.**

When you're turning with a trailer, make wider turns than normal. Do this so your trailer won't strike soft shoulders, curbs, road signs, trees or other objects. Avoid jerky or sudden maneuvers. Signal well in advance.

Turn Signals When Towing a Trailer

The arrows on your instrument panel will flash whenever you signal a turn or lane change. Properly hooked up, the trailer lamps will also flash, telling other drivers you're about to turn, change lanes or stop.

When towing a trailer, the arrows on your instrument panel will flash for turns even if the bulbs on the trailer are burned out. Thus, you may think drivers behind you are seeing your signal when they are not. It's important to check occasionally to be sure the trailer bulbs are still working.

Driving On Grades

Reduce speed and shift to a lower gear *before* you start down a long or steep downgrade. If you don't shift down, you might have to use your brakes so much that they would get hot and no longer work well.

If you have an automatic transmission, you can tow in DRIVE (D). You may want to shift the transmission to a lower gear selection if the transmission shifts too often (e.g., under heavy loads and/or hilly conditions).

You may also want to activate the tow/haul mode if the transmission shifts too often. See *Tow/Haul Mode Light on page 3-49*.

If you have a 5-speed manual transmission and you are towing a trailer, it's better not to use FIFTH (5) gear. Just drive in FOURTH (4) gear (or, as you need to, a lower gear).

If you have a 6-speed manual transmission and you are towing a trailer, it's better not to use SIXTH (6) gear. Drive in FIFTH (5) gear (or, as you need to, a lower gear).

When towing at high altitude on steep uphill grades, consider the following: Engine coolant will boil at a lower temperature than at normal altitudes. If you turn your engine off immediately after towing at high altitude on steep uphill grades, your vehicle may show signs similar to engine overheating. To avoid this, let the engine run while parked, preferably on level ground, with the automatic transmission in PARK (P) for a few minutes before turning the engine off. For manual transmissions, let the engine run while parked, preferably on level ground, with the transmission out of gear and the parking brake applied, for a few minutes before turning the engine off. If you do get the overheat warning, see *Engine Overheating on page 5-37*.

Parking on Hills

⚠ CAUTION:

You really should not park your vehicle, with a trailer attached, on a hill. If something goes wrong, your rig could start to move. People can be injured, and both your vehicle and the trailer can be damaged.

But if you ever have to park your rig on a hill, here's how to do it:

1. Apply your regular brakes, but don't shift into PARK (P) yet for an automatic transmission, or into gear for a manual transmission.
2. Have someone place chocks under the trailer wheels.
3. When the wheel chocks are in place, release the regular brakes until the chocks absorb the load.
4. Reapply the regular brakes. Then apply your parking brake and shift into PARK (P) for an automatic transmission, or REVERSE (R) for a manual transmission.

5. If you have a four-wheel-drive vehicle, be sure the transfer case is in a drive gear and not in NEUTRAL.
6. Release the regular brakes.

⚠ CAUTION:

It can be dangerous to get out of your vehicle if the shift lever is not fully in PARK (P) with the parking brake firmly set. Your vehicle can roll.

If you have left the engine running, the vehicle can move suddenly. You or others could be injured. To be sure your vehicle will not move, even when you are on fairly level ground, use the steps that follow.

Always put the shift lever fully in PARK (P) with the parking brake firmly set.

If the transfer case on four-wheel-drive vehicles is in NEUTRAL, your vehicle will be free to roll, even if your shift lever is in PARK (P). So, be sure the transfer case is in a drive gear — not in NEUTRAL.

When You Are Ready to Leave After Parking on a Hill

1. Apply your regular brakes and hold the pedal down while you:
   - Start your engine
   - Shift into a gear
   - Release the parking brake
2. Let up on the brake pedal.
3. Drive slowly until the trailer is clear of the chocks.
4. Stop and have someone pick up and store the chocks.

Maintenance When Trailer Towing

Your vehicle will need service more often when you're pulling a trailer. See *Scheduled Maintenance on page 6-4* for more information. Things that are especially important in trailer operation are automatic transmission fluid (don't overfill), engine oil, axle lubricant, belt, cooling system and brake system. Each of these is covered in this manual, and the Index will help you find them quickly. If you're trailering, it's a good idea to review these sections before you start your trip.

Check periodically to see that all hitch nuts and bolts are tight.

Trailer Wiring Harness

Your vehicle is equipped with one of the following wiring harnesses for towing a trailer or hauling a slide-in camper.

Basic Trailer Wiring

All regular, extended cab and crew cab pickups have an eight-wire trailer towing harness.

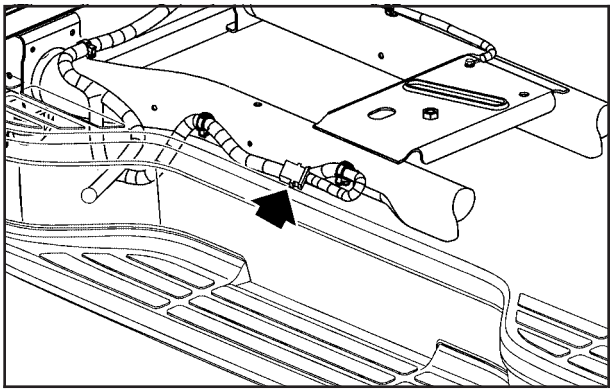

For vehicles not equipped with heavy duty trailering, the harness is clipped to the vehicle's frame behind the spare tire mount. The harness requires the installation of a trailer connector, which is available through your dealer.

If your trailer is equipped with electric brakes, you can get a jumper harness (electric trailer brake control) with a trailer battery feed fuse from your dealer.

If you need to tow a light-duty trailer with a standard four-way round pin connector, you can also get an adapter form your dealer.

Heavy-DutyTrailer Wiring Harness Package

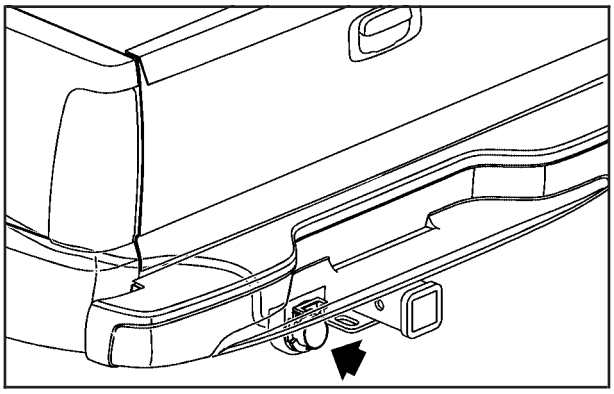

For vehicles equipped with heavy duty trailering, the harness is connected to the trailer plug mounted to the hitch platform.

The eight-wire harness contains the following trailer circuits:

- Yellow: Left Stop/Turn Signal
- Dark Green: Right Stop/Turn Signal
- Brown: Taillamps
- White: Ground
- Light Green: Back-up Lamps
- Light Blue: CHMSL*
- Red: Battery Feed**
- Dark Blue: Trailer Brake

* The Center High-Mounted Stoplamp (CHMSL) wire is tied next to the trailer wiring harness for use with a trailer, slide-in camper or cap.

**If your vehicle is charging a remote (non-vehicle) battery, turn on the headlamps to boost the vehicle system voltage and properly charge the battery.

Camper/Fifth-Wheel Trailer Wiring Package

The eight-wire camper harness is located under the front edge of the pickup box on the driver's side of the vehicle, attached to the frame bracket. A connector will have to be added to the wiring harness which connects to the camper.

The eight-wire harness contains the following camper/trailer circuits:

- Yellow: Left Stop/Turn Signal
- Dark Green: Right Stop/Turn Signal
- Brown: Taillamps
- White: Ground
- Light Green: Back-up Lamps
- Light Blue: Center High-Mounted Stoplamp (CHMSL)
- Red: Battery Feed
- Dark Blue: Trailer Brake

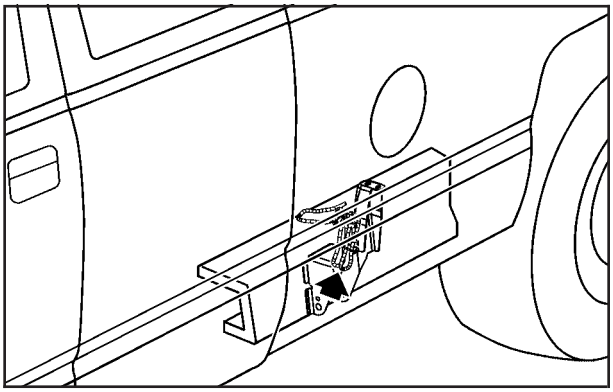

If your vehicle is equipped with the "Heavy-Duty Trailering" option, please refer to "Heavy-Duty Trailer Wiring Package" earlier in this section.

When the camper-wiring harness is ordered without the heavy-duty trailering package, an eight-wire harness with a seven-pin connector and separate CHMSL connector are located at the rear of the vehicle and are tied to the vehicle's frame.

Electric Brake Control Jumper

⚠ CAUTION:

Be sure to use only the correct trailer brake harness, the one intended for use on your vehicle. If you use some other trailer brake harness, even if it seems to fit, your trailer brakes may not work at all. You could have a crash in which you or others could be injured. Use only the trailer brake harness intended for your vehicle. If it is no longer available to you, be sure to get a proper replacement from your dealer.

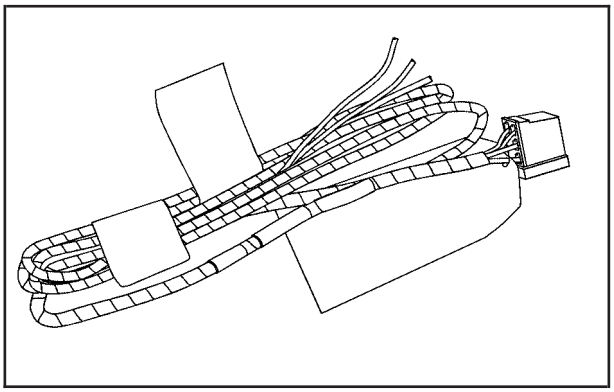

This harness is included with your vehicle as part of the heavy-duty trailer wiring package.

This harness is for an electric brake controller and includes a trailer battery feed fuse. It should be installed by your dealer or a qualified service center.

Four-Wire Harness Adapter

This adapter is included with your vehicle as part of the heavy-duty trailer wiring package.

Use this adapter to connect a standard four-way round pin connector to the seven-wire harness on your vehicle.

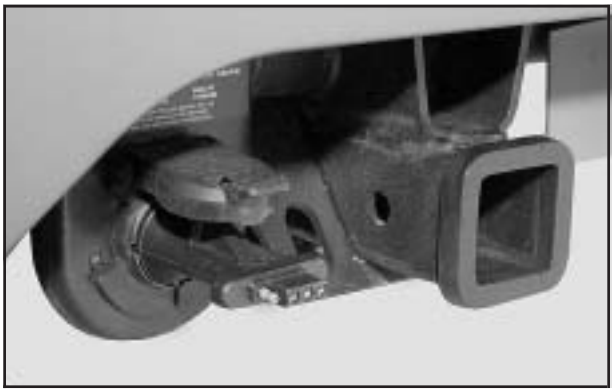

Connect the adapter with the tab pointing up (see arrow). The flip cap on the vehicle's seven-wire harness will lock onto the tab and help hold the adapter in place. Plug the four-way round pin connector onto the adapter.

Auxiliary Battery

The auxiliary battery provision can be used to supply electrical power to additional equipment that you may choose to add, such as a slide-in camper.

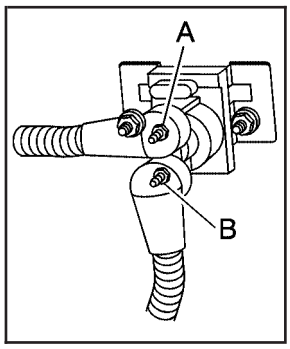

If your vehicle has this provision, this relay will be located on the passenger's side of the vehicle, next to the auxiliary battery.

When using this provision, connection should only be made to the upper stud (A) of the relay. Do not make connections to the lower stud (B) of the relay.

The auxiliary battery circuit is protected by a megafuse located behind the auxiliary battery.

Be sure to follow the proper installation instructions that are included with any electrical equipment that you install.

Notice: **Leaving electrical equipment on for extended periods will drain the battery. Always turn off electrical equipment when not in use and do not use equipment that exceeds the maximum amperage rating for the auxiliary battery provision.**

Power Winches

If you wish to use a power winch on your vehicle, only use it when your vehicle is stationary or anchored.

Power Take-Off (PTO)

Before using a Power Take-Off (PTO), if equipped, refer to the manufacturer's or installer's instructions.

To engage a PTO on a vehicle with a manual transmission do the following:

1. Hold the clutch pedal down.
2. Set the parking brake.
3. Shift the transmission into NEUTRAL.
4. Engage the PTO. Refer to the manufacturer's or installer's for instructions on electrically engaged PTOs.
5. For mobile operations, shift the transmission into the gear you want, apply the regular brakes and release the parking brake. For stationary operations, leave the parking brake applied.
6. Release the clutch and regular brakes as you normally would. When the clutch is released, the PTO will start.
7. Turn the PTO rotary switch to ON.

To engage a PTO on a vehicle with an automatic transmission do the following:

1. For stationary use shift the transmission into PARK (P).
2. Turn the PTO rotary switch ON.
3. If the engine speed is below the PTO engage speed limit, the PTO will start. The blinking LED on the PTO control switch indicates PTO engage is requested. When PTO engages the LED will switch from blinking to a steady light.

To use PTO speed control in Preset Mode (Factory Setting) do the following:

1. Engage the PTO.
2. Select PARK (P) or NEUTRAL (N) range. Apply the parking brake if NEUTRAL (N) is selected. Torque Converter Clutch (TCC) is not available in NEUTRAL (N) and is available only in PARK (P) when engine speed is above 1,100 rpm.
3. Make sure your foot is off the brake pedal (and off the clutch on vehicles equipped with a manual transmission).
4. Select the desired engine speed for PTO operation. Read the following preset mode information regarding operation.

Preset Mode: PTO speed control mode is used for stationary applications. (PTO will remain engaged while mobile in the preset mode, however PTO set and resume speed controls will be inoperative.) This mode provides a default standby speed of 800 or 850 rpm (depending on the engine/transmission combination) and two default PTO control speeds which follow:

1. PTO Set Speed of 1,250 rpm, or
2. PTO Resume Speed of 1,700 rpm.

Please note that the standby speed (800/850 rpm) is not to be used as a PTO control speed. Vehicles not equipped with cruise control will not have the resume speed capability.

To use PTO speed control in variable mode (while mobile) do the following:

1. Engage the PTO.
2. Vehicle speed must be greater than 5 mph.
3. Make sure your foot is off the brake pedal (and off the clutch for vehicles equipped with a manual transmission).
4. Select the desired engine speed by using the foot pedal, and select SET on the PTO switch or the cruise control.

To use PTO speed control in variable mode (while stationary) do the following:

1. Engage the PTO.
2. Vehicle speed must be less than 5 mph.
3. Make sure your foot is off the brake pedal (and off the clutch for vehicles equipped with a manual transmission).
4. Select the desired engine speed by using the foot pedal, and select SET on the PTO switch or the cruise control.

Variable Mode: PTO speed control mode can be used for both stationary and mobile applications. This mode allows PTO to be controlled in a fashion similar to how cruise control sets vehicle speed. The operator can set to an rpm (between 800 and 2,200) with the cruise control feature or with the SET position on the PTO switch. The operator is then able to increase rpm in increments of 100, or “tap up” with the resume position on the cruise control. The operator can also decrease rpm in increments of 100 with the SET switch on the PTO or the cruise control.

Vehicles not equipped with cruise control will not have the “tap up” capability.

All engine speed values listed above are factory preset values. With the exception of the TCC lockup speed (1,100 rpm) and the “tap” increment (100 rpm), all of these values are programmable and can be adjusted by your dealer or body upfitter. If the PTO software settings do not match the settings shown here, then they may have already been altered in order to satisfy the requirements of the installed PTO system and body equipment.

When the PTO switch is turned on, the engine is limited to 2,200 rpms. If there are no accessories installed on the vehicle, make sure the PTO switch is turned off.

Step-Bumper Pad

Your vehicle has a rear step bumper with a rear step pad at the center of the bumper.

If you will be using the bumper to tow a trailer, and your step-bumper has three cutout circles, you must push out the center cutout circle to install the trailer ball.

If your step-bumper has only one cutout circle, you will have to cut out the circle, then remove it to install the trailer ball.

Section 5 Service and Appearance Care

Service 5-4
Doing Your Own Service Work 5-5
Adding Equipment to the Outside of Your Vehicle 5-6

Fuel 5-6
Gasoline Octane 5-6
Gasoline Specifications 5-7
California Fuel 5-7
Additives 5-7
Fuel E-85 (85% Ethanol) 5-8
Fuels in Foreign Countries 5-9
Filling Your Tank 5-10
Filling a Portable Fuel Container 5-12

Checking Things Under the Hood 5-12
Hood Release 5-13
Engine Compartment Overview 5-14
Engine Oil (Gasoline Engine) 5-20
Engine Oil Life System (Gasoline Engine) 5-23
Engine Air Cleaner/Filter 5-25
Automatic Transmission Fluid (Except Allison Transmission®) 5-27
Automatic Transmission Fluid (Allison Transmission®) 5-30
Manual Transmission Fluid 5-33
Hydraulic Clutch 5-34
Engine Coolant 5-35
Coolant Surge Tank Pressure Cap 5-37
Engine Overheating 5-37
Overheated Engine Protection Operating Mode (V8 Engines Only) 5-39
Cooling System 5-40
Engine Fan Noise 5-45
Power Steering Fluid 5-46
Windshield Washer Fluid 5-48
Brakes 5-49
Battery 5-52
Jump Starting 5-53

Rear Axle 5-58

Four-Wheel Drive 5-58

Front Axle 5-60

Noise Control System 5-61
Tampering with Noise Control System Prohibited 5-61

Bulb Replacement 5-62
Halogen Bulbs 5-62
Headlamps 5-63
Front Turn Signal, Sidemarker and Daytime Running Lamps 5-64
Roof Marker Lamps 5-65

Section 5 Service and Appearance Care

Center High-Mounted Stoplamp (CHMSL) and Cargo Lamp 5-67
Pickup Box Identification and Fender Marker Lamps 5-69
Taillamps 5-69
Replacement Bulbs 5-71

Windshield Wiper Blade Replacement 5-72

Tires 5-72
Tire Sidewall Labelling 5-74
Tire Terminology and Definitions 5-77
Inflation - Tire Pressure 5-79
Dual Tire Operation 5-82
Tire Inspection and Rotation 5-83
When It Is Time for New Tires 5-85
Buying New Tires 5-86
Uniform Tire Quality Grading 5-87
Wheel Alignment and Tire Balance 5-88
Wheel Replacement 5-88
Tire Chains 5-90
If a Tire Goes Flat 5-91
Changing a Flat Tire 5-92
Removing the Spare Tire and Tools 5-93
Removing the Flat Tire and Installing the Spare Tire 5-97
Secondary Latch System 5-105
Storing a Flat or Spare Tire and Tools 5-109
Spare Tire 5-112

Appearance Care 5-112
Fabric/Carpet 5-113
Vinyl 5-114
Leather 5-114
Instrument Panel 5-115
Interior Plastic Components 5-115
Glass Surfaces 5-115
Care of Safety Belts 5-115
Weatherstrips 5-115
Washing Your Vehicle 5-116
Cleaning Exterior Lamps/Lenses 5-116
Finish Care 5-116
Windshield and Wiper Blades 5-117
Aluminum or Chrome-Plated Wheels 5-117
Tires 5-118
Sheet Metal Damage 5-118
Finish Damage 5-118
Underbody Maintenance 5-119
Chemical Paint Spotting 5-119
Vehicle Care/Appearance Materials 5-119

Section 5 Service and Appearance Care

Vehicle Identification 5-120
Vehicle Identification Number (VIN) 5-120
Service Parts Identification Label 5-121
Electrical System 5-121
Add-On Electrical Equipment 5-121
Windshield Wiper Fuses 5-121
Power Windows and Other
Power Options 5-122
Fuses and Circuit Breakers 5-122
Instrument Panel Fuse Block 5-122
Center Instrument Panel Fuse Block 5-124
Underhood Fuse Block 5-125
Capacities and Specifications 5-130

Service

Your dealer knows your vehicle best and wants you to be happy with it. We hope you will go to your dealer for all your service needs. You will get genuine GM parts and GM-trained and supported service people.

We hope you will want to keep your GM vehicle all GM. Genuine GM parts have one of these marks:

ACDelco®

GM Parts

GM Goodwrench

GM Accessories

California Proposition 65 Warning

Most motor vehicles, including this one, contain and/or emit chemicals known to the State of California to cause cancer and birth defects or other reproductive harm. Engine exhaust, many parts and systems (including some inside the vehicle), many fluids, and some component wear by-products contain and/or emit these chemicals.

Doing Your Own Service Work

If you want to do some of your own service work, you will want to use the proper service manual. It tells you much more about how to service your vehicle than this manual can. To order the proper service manual, see *Service Publications Ordering Information on page 7-11*.

Your vehicle has an airbag system. Before attempting to do your own service work, see *Servicing Your Airbag-Equipped Vehicle on page 1-80*.

You should keep a record with all parts receipts and list the mileage and the date of any service work you perform. See *Maintenance Record on page 6-18*.

⚠ CAUTION:

You can be injured and your vehicle could be damaged if you try to do service work on a vehicle without knowing enough about it.

- **Be sure you have sufficient knowledge, experience, the proper replacement parts and tools before you attempt any vehicle maintenance task.**
- **Be sure to use the proper nuts, bolts and other fasteners. English and metric fasteners can be easily confused. If you use the wrong fasteners, parts can later break or fall off. You could be hurt.**

Adding Equipment to the Outside of Your Vehicle

Things you might add to the outside of your vehicle can affect the airflow around it. This may cause wind noise and affect windshield washer performance. Check with your dealer before adding equipment to the outside of your vehicle.

Fuel

If your vehicle has a diesel engine, see “Diesel Fuel Requirements and Fuel System” in the Diesel Engine Supplement.

For vehicles with gasoline engines, please read this.

Gasoline Octane

For all except vehicles with the 6000 V8 (VIN Code N) engine, use regular unleaded gasoline with a posted octane of 87 or higher. If the octane is less than 87, you may get a heavy knocking noise when you drive. If this occurs, use a gasoline rated at 87 octane or higher as soon as possible. Otherwise, you might damage your engine. A little pinging noise when you accelerate or drive uphill is considered normal. This does not indicate a problem exists or that a higher-octane fuel is necessary. If you are using 87 octane or higher-octane fuel and hear heavy knocking, your engine needs service.

If you have the 6000 V8 (VIN Code N) engine, use premium unleaded gasoline with a posted octane of 91 or higher for best performance. You may also use middle grade or regular unleaded gasoline rated at 87 octane or higher, but your vehicle’s acceleration may be slightly reduced. If the octane is less than 87, you may get a heavy knocking noise when you drive. If this occurs, use gasoline rated at 87 octane or higher as soon as possible. Otherwise, you might damage your engine.

Gasoline Specifications

It is recommended that gasoline meet specifications which were developed by automobile manufacturers around the world and contained in the World-Wide Fuel Charter which is available from the Alliance of Automobile Manufacturers at www.autoalliance.org/fuel_charter.htm. Gasoline meeting these specifications could provide improved driveability and emission control system performance compared to other gasoline.

California Fuel

If your vehicle is certified to meet California Emission Standards (see the underhood emission control label), it is designed to operate on fuels that meet California specifications. If this fuel is not available in states adopting California emissions standards, your vehicle will operate satisfactorily on fuels meeting federal specifications, but emission control system performance may be affected. The malfunction indicator lamp may turn on and your vehicle may fail a smog-check test. See *Malfunction Indicator Lamp on page 3-44*. If this occurs, return to your authorized GM dealer for diagnosis. If it is determined that the condition is caused by the type of fuel used, repairs may not be covered by your warranty.

Additives

To provide cleaner air, all gasolines in the United States are now required to contain additives that will help prevent engine and fuel system deposits from forming, allowing your emission control system to work properly. In most cases, you should not have to add anything to your fuel. However, some gasolines contain only the minimum amount of additive required to meet U.S. Environmental Protection Agency regulations. General Motors recommends that you buy gasolines that are advertised to help keep fuel injectors and intake valves clean. If your vehicle experiences problems due to dirty injectors or valves, try a different brand of gasoline. Also, your GM dealer has additives that will help correct and prevent most deposit-related problems.

Gasolines containing oxygenates, such as ethers and ethanol, and reformulated gasolines may be available in your area to contribute to clean air. General Motors recommends that you use these gasolines, particularly if they comply with the specifications described earlier.

Notice: **Your vehicle was not designed for fuel that contains methanol. Do not use fuel containing methanol. It can corrode metal parts in your fuel system and also damage the plastic and rubber parts. That damage would not be covered under your warranty.**

Some gasolines that are not reformulated for low emissions may contain an octane-enhancing additive called methylcyclopentadienyl manganese tricarbonyl (MMT); ask the attendant where you buy gasoline whether the fuel contains MMT. General Motors does not recommend the use of such gasolines. Fuels containing MMT can reduce the life of spark plugs and the performance of the emission control system may be affected. The malfunction indicator lamp may turn on. If this occurs, return to your authorized GM dealer for service.

Fuel E-85 (85% Ethanol)

The 8th digit of your vehicle identification number (VIN) shows the code letter or number that identifies your engine. You will find the VIN at the top left of the instrument panel. See *Vehicle Identification Number (VIN) on page 5-120*.

If your vehicle has the 5.3L V8 engine (VIN Code Z only), you may use either regular unleaded gasoline or ethanol fuel containing up to 85% ethanol (E-85); also see *Fuel on page 5-6*. In all other engines, including the 5.3L V8 (VIN Code T), use only regular unleaded gasoline.

Only vehicles that have the 5.3L V8 engine (VIN Code Z) may use 85% ethanol fuel (E-85). General Motors encourages the use of E-85 in vehicles that are designed to use it. The ethanol in E-85 is a “renewable” fuel, meaning it is made from renewable sources such as corn and other crops.

Many service stations will not have an 85% ethanol fuel (E-85) pump available. The U. S. Department of Energy has an alternative fuels website (http://www.afdc.doe.gov/refueling_mapsite.shtml) that can help you find E-85 fuel. Those stations that do have E-85 should have a label indicating ethanol content. Do not use the fuel if the ethanol content is *greater* than 85%. Your vehicle may not operate properly if the ethanol content is greater than 85%.

At a minimum, E-85 should meet ASTM Specification D 5798.

To ensure quick starts in the wintertime, the E-85 fuel must be formulated properly for your climate according to ASTM specification D 5798. If you have trouble starting on E-85, it may be because your E-85 fuel is not properly formulated for your climate. If this happens, switching to gasoline or adding gasoline to your fuel tank may improve starting. Your vehicle is designed to accommodate a mixture of gasoline and E-85 fuel. For good starting and heater efficiency below 32°F (0°C), the fuel mix in the fuel tank should contain no more than 70% ethanol.

E-85 has less energy per gallon than gasoline, so you will need to refill your fuel tank more often when using E-85 than when you are using gasoline. Regular unleaded gasoline is recommended when pulling a trailer. For payload capacity with ethanol fuel, see *Loading Your Vehicle on page 4-50*.

Notice: **Some additives are not compatible with E-85 fuel and may harm your fuel system. Damage caused by additives would not be covered by your new vehicle warranty. Do not use additives with E-85 fuel.**

Notice: **Your vehicle was not designed for fuel that contains methanol. Do not use fuel containing methanol. It can corrode metal parts in your fuel system and also damage the plastic and rubber parts. That damage would not be covered under your warranty.**

Fuels in Foreign Countries

If you plan on driving in another country outside the United States or Canada, the proper fuel may be hard to find. Never use leaded gasoline or any other fuel not recommended in the previous text on fuel. Costly repairs caused by use of improper fuel would not be covered by your warranty.

To check the fuel availability, ask an auto club, or contact a major oil company that does business in the country where you will be driving.

Filling Your Tank

⚠ CAUTION:

Fuel vapor burns violently and a fuel fire can cause bad injuries. To help avoid injuries to you and others, read and follow all the instructions on the pump island. Turn off your engine when you are refueling. Do not smoke if you are near fuel or refueling your vehicle. Keep sparks, flames and smoking materials away from fuel. Do not leave the fuel pump unattended when refueling your vehicle — this is against the law in some places. Keep children away from the fuel pump; never let children pump fuel.

The tethered fuel cap is located behind a hinged fuel door on the driver's side of the vehicle.

To remove the fuel cap, turn it slowly to the left (counterclockwise). It will require more effort to turn the fuel cap on the last turn as you loosen it.

⚠ CAUTION:

If you spill fuel and then something ignites it, you could be badly burned. Fuel can spray out on you if you open the fuel cap too quickly. This spray can happen if your tank is nearly full, and is more likely in hot weather. Open the fuel cap slowly and wait for any hiss noise to stop. Then unscrew the cap all the way.

If your vehicle is a dual fuel tank chassis cab model, and it runs out of fuel, refuel the front fuel tank first to ensure a quick restart.

Be careful not to spill fuel. Do not top off or overfill the tank and wait a few seconds after you have finished pumping before removing the nozzle. Clean fuel from painted surfaces as soon as possible. See *Washing Your Vehicle on page 5-116*.

When replacing the fuel cap, turn it to the right (clockwise) until it clicks. It will require more effort to turn the fuel cap on the last turn as you tighten it. Make sure the cap is fully installed. The diagnostic system can determine if the fuel cap has been left off or improperly installed. This would allow fuel to evaporate into the atmosphere. See *Malfunction Indicator Lamp on page 3-44*.

⚠ CAUTION:

If a fire starts while you are refueling, do not remove the nozzle. Shut off the flow of fuel by shutting off the pump or by notifying the station attendant. Leave the area immediately.

Notice: **If you need a new fuel cap, be sure to get the right type. Your dealer can get one for you. If you get the wrong type, it may not fit properly. This may cause your malfunction indicator lamp to light and may damage your fuel tank and emissions system. See *Malfunction Indicator Lamp on page 3-44*.**

Filling a Portable Fuel Container

⚠ CAUTION:

Never fill a portable fuel container while it is in your vehicle. Static electricity discharge from the container can ignite the gasoline vapor. You can be badly burned and your vehicle damaged if this occurs. To help avoid injury to you and others:

- **Dispense gasoline only into approved containers.**
- **Do not fill a container while it is inside a vehicle, in a vehicle's trunk, pickup bed or on any surface other than the ground.**
- **Bring the fill nozzle in contact with the inside of the fill opening before operating the nozzle. Contact should be maintained until the filling is complete.**
- **Do not smoke while pumping gasoline.**

Checking Things Under the Hood

⚠ CAUTION:

An electric fan under the hood can start up and injure you even when the engine is not running. Keep hands, clothing and tools away from any underhood electric fan.

⚠ CAUTION:

Things that burn can get on hot engine parts and start a fire. These include liquids like fuel, oil, coolant, brake fluid, windshield washer and other fluids, and plastic or rubber. You or others could be burned. Be careful not to drop or spill things that will burn onto a hot engine.

Hood Release

To open the hood do the following:

1. Pull the handle located inside the vehicle to the lower left of the steering wheel.

2. Then go to the front of the vehicle and pull up on the secondary hood release located near the center of the grille.
3. Lift the hood.

   Before closing the hood, be sure all the filler caps are on properly. Then pull down the hood and close it firmly.

Engine Compartment Overview

When you open the hood on the VORTEC™ 4300 V6 engine, here is what you will see:

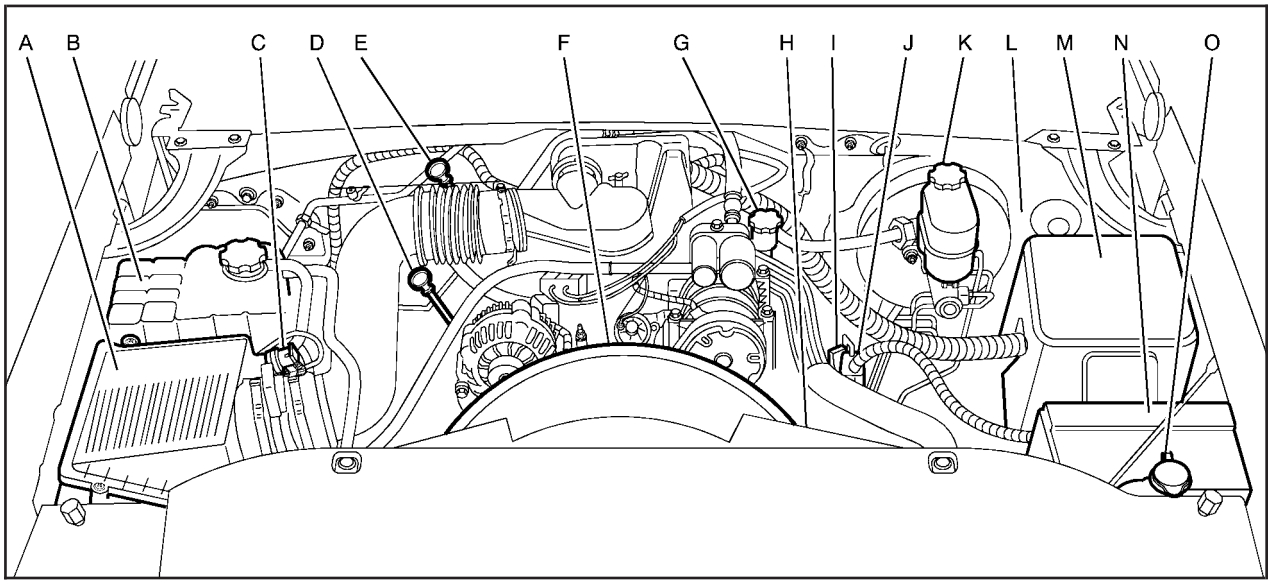

A. Engine Air Cleaner/Filter. See *Engine Air Cleaner/Filter on page 5-25*.

B. Coolant Surge Tank and Pressure Cap. See *Engine Coolant on page 5-35* and *Coolant Surge Tank Pressure Cap on page 5-37*.

C. Air Filter Restriction Indicator (If Equipped). See *Engine Air Cleaner/Filter on page 5-25*.

D. Engine Oil Dipstick. See “Checking Engine Oil” under *Engine Oil (Gasoline Engine) on page 5-20*.

E. Automatic Transmission Fluid Dipstick (If Equipped). See “Checking the Fluid Level” under *Automatic Transmission Fluid (Except Allison Transmission®) on page 5-27* or *Automatic Transmission Fluid (Allison Transmission®) on page 5-30*.

F. Electric Engine Cooling Fan (If Equipped). See *Cooling System on page 5-40*.

G. Engine Oil Fill Cap. See “When to Add Engine Oil” under *Engine Oil (Gasoline Engine) on page 5-20*.

H. Power Steering Fluid Reservoir. See *Power Steering Fluid on page 5-46*.

I. Remote Negative (–) Terminal (GND). See *Jump Starting on page 5-53*.

J. Remote Positive (+) Terminal. See *Jump Starting on page 5-53*.

K. Brake Fluid Reservoir. See “Brake Fluid” under *Brakes on page 5-49*.

L. Clutch Fluid Reservoir (If Equipped). See *Hydraulic Clutch on page 5-34*.

M. Underhood Fuse Block. See *Underhood Fuse Block on page 5-125*.

N. Battery. See *Battery on page 5-52*.

O. Windshield Washer Fluid Reservoir. See “Adding Washer Fluid” under *Windshield Washer Fluid on page 5-48*.

When you open the hood on the VORTEC™ 5300 V8 engine (VORTEC™ 4800 and 6000 V8 engines similar), here is what you will see:

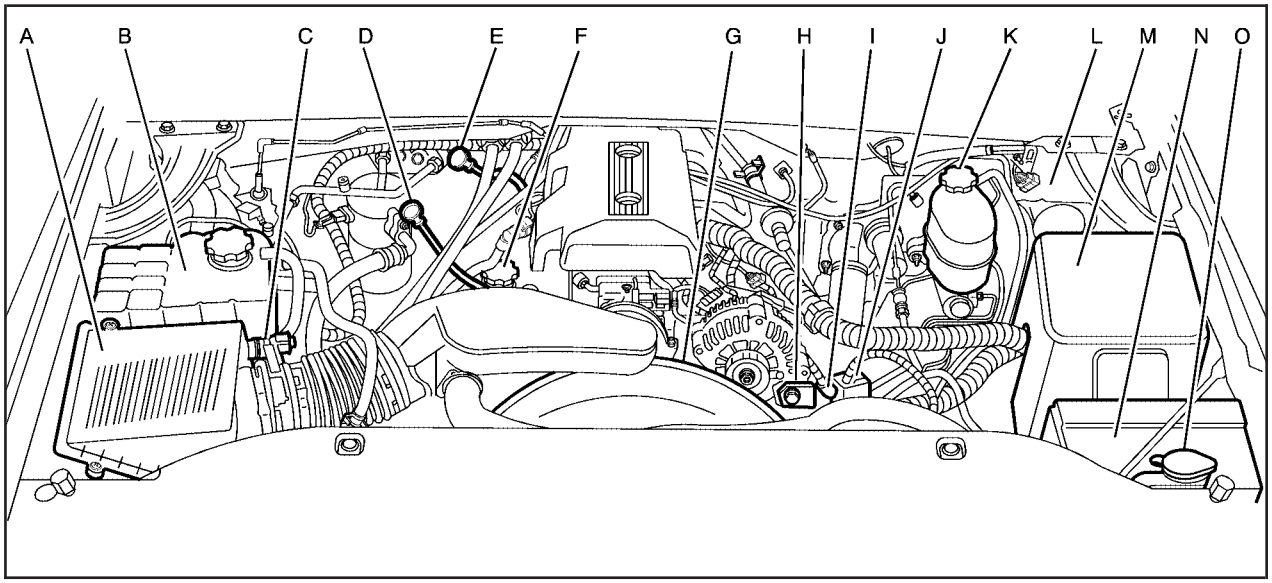

A. Engine Air Cleaner/Filter. See *Engine Air Cleaner/Filter on page 5-25*.

B. Coolant Surge Tank and Pressure Cap. See *Engine Coolant on page 5-35* and *Coolant Surge Tank Pressure Cap on page 5-37*.

C. Air Filter Restriction Indicator (If Equipped). See *Engine Air Cleaner/Filter on page 5-25*.

D. Engine Oil Dipstick. See “Checking Engine Oil” under *Engine Oil (Gasoline Engine) on page 5-20*.

E. Automatic Transmission Fluid Dipstick (If Equipped). See “Checking the Fluid Level” under *Automatic Transmission Fluid (Except Allison Transmission®) on page 5-27* or *Automatic Transmission Fluid (Allison Transmission®) on page 5-30*.

F. Engine Oil Fill Cap. See “When to Add Engine Oil” under *Engine Oil (Gasoline Engine) on page 5-20*.

G. Electric Engine Cooling Fan (If Equipped). See *Cooling System on page 5-40*.

H. Remote Negative (–) Terminal (GND). See *Jump Starting on page 5-53*.

I. Power Steering Fluid Reservoir. See *Power Steering Fluid on page 5-46*.

J. Remote Positive (+) Terminal. See *Jump Starting on page 5-53*.

K. Brake Fluid Reservoir. See “Brake Fluid” under *Brakes on page 5-49*.

L. Clutch Fluid Reservoir (If Equipped). See *Hydraulic Clutch on page 5-34*.

M. Underhood Fuse Block. See *Underhood Fuse Block on page 5-125*.

N. Battery. See *Battery on page 5-52*.

O. Windshield Washer Fluid Reservoir. See “Adding Washer Fluid” under *Windshield Washer Fluid on page 5-48*.

When you open the hood on the VORTEC™ 8100 V8 engine, here is what you will see:

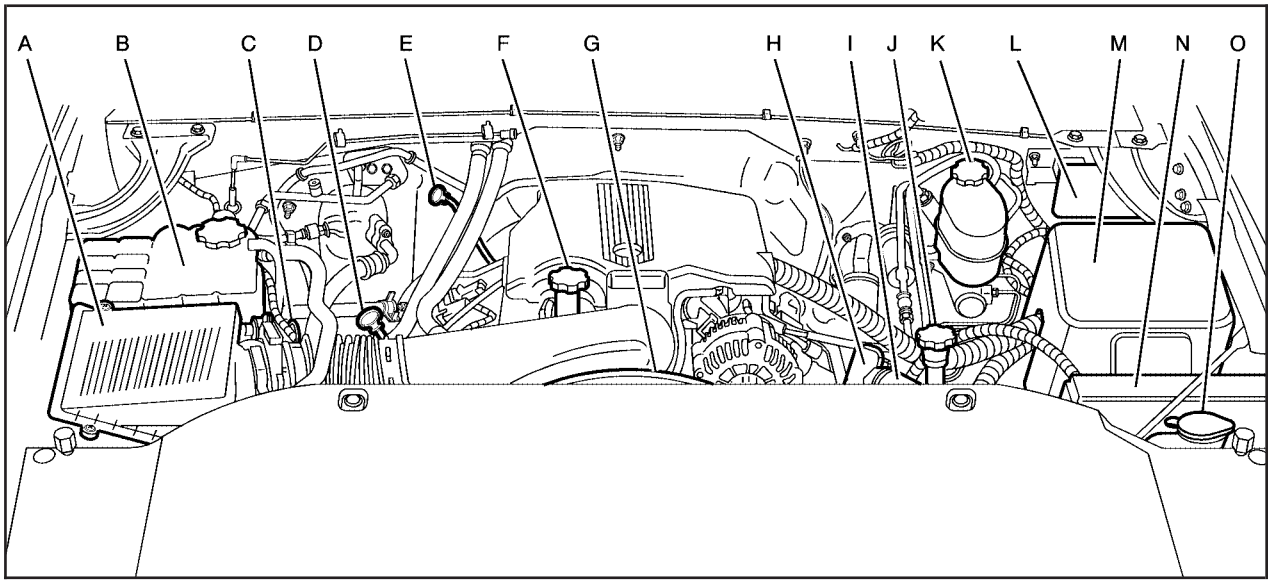

A. Engine Air Cleaner/Filter. See *Engine Air Cleaner/Filter on page 5-25*.

B. Coolant Surge Tank and Pressure Cap. See *Engine Coolant on page 5-35* and *Coolant Surge Tank Pressure Cap on page 5-37*.

C. Air Filter Restriction Indicator (If Equipped). See *Engine Air Cleaner/Filter on page 5-25*.

D. Engine Oil Dipstick. See “Checking Engine Oil” under *Engine Oil (Gasoline Engine) on page 5-20*.

E. Automatic Transmission Fluid Dipstick (If Equipped). See “Checking the Fluid Level” under *Automatic Transmission Fluid (Except Allison Transmission®) on page 5-27* or *Automatic Transmission Fluid (Allison Transmission®) on page 5-30*.

F. Engine Oil Fill Cap. See “When to Add Engine Oil” under *Engine Oil (Gasoline Engine) on page 5-20*.

G. Engine-Driven Cooling Fan. See *Cooling System on page 5-40*.

H. Remote Negative (–) Terminal (GND). See *Jump Starting on page 5-53*.

I. Remote Positive (+) Terminal. See *Jump Starting on page 5-53*.

J. Power Steering Fluid Reservoir. See *Power Steering Fluid on page 5-46*.

K. Brake Fluid Reservoir. See “Brake Fluid” under *Brakes on page 5-49*.

L. Clutch Fluid Reservoir (If Equipped). See *Hydraulic Clutch on page 5-34*.

M. Underhood Fuse Block. See *Underhood Fuse Block on page 5-125*.

N. Battery. See *Battery on page 5-52*.

O. Windshield Washer Fluid Reservoir. See “Adding Washer Fluid” under *Windshield Washer Fluid on page 5-48*.

Engine Oil (Gasoline Engine)

If your vehicle has a diesel engine, see “Engine Oil” in the Diesel Engine Supplement.

If the CHECK OIL LEVEL light appears on the instrument cluster (except vehicles equipped with the 4.3L engine), it means you need to check your engine oil level right away.

For more information, see *Driver Information Center (DIC) on page 3-50*.

You should check your engine oil level regularly; this is an added reminder.

Checking Engine Oil

It is a good idea to check your engine oil every time you get fuel. In order to get an accurate reading, the oil must be warm and the vehicle must be on level ground.

The engine oil dipstick handle is a yellow loop. See *Engine Compartment Overview on page 5-14* for the location of the engine oil dipstick.

1. Turn off the engine and give the oil several minutes to drain back into the oil pan. If you do not do this, the oil dipstick might not show the actual level.
2. Pull out the dipstick and clean it with a paper towel or cloth, then push it back in all the way. Remove it again, keeping the tip down, and check the level.

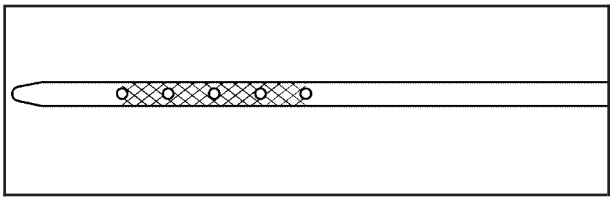

All Other Engines

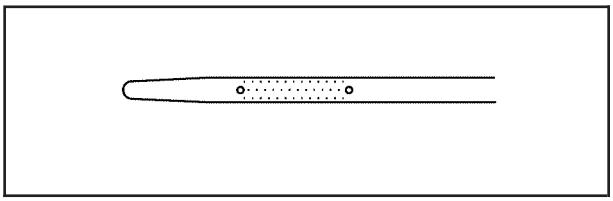

8.1L Engine

When to Add Engine Oil

If the oil is at or below the cross-hatched area at the tip of the dipstick, then you will need to add at least one quart of oil. But you must use the right kind. This section explains what kind of oil to use. For engine oil crankcase capacity, see *Capacities and Specifications on page 5-130*.

Notice: **Do not add too much oil. If your engine has so much oil that the oil level gets above the cross-hatched area that shows the proper operating range, your engine could be damaged.**

See *Engine Compartment Overview on page 5-14* for the location of the engine oil fill cap.

Be sure to add enough oil to put the level somewhere in the proper operating range. Push the dipstick all the way back in when you are through.

What Kind of Engine Oil to Use

Look for two things:

- GM6094M

  Your vehicle's engine requires oil meeting GM Standard GM6094M. You should look for and use only an oil that meets GM Standard GM6094M.

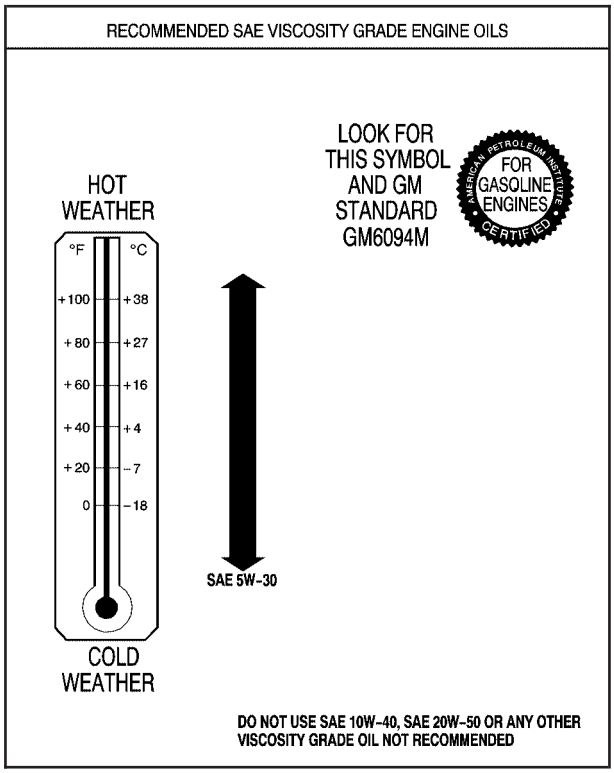

- SAE 5W-30

  As shown in the viscosity chart, SAE 5W-30 is best for your vehicle.

  These numbers on an oil container show its viscosity, or thickness. Do not use other viscosity oils such as SAE 20W-50.

Oils meeting these requirements should also have the starburst symbol on the container. This symbol indicates that the oil has been certified by the American Petroleum Institute (API).

You should look for this information on the oil container, and use *only* those oils that are identified as meeting GM Standard GM6094M and have the starburst symbol on the front of the oil container.

Notice: **Use only engine oil identified as meeting GM Standard GM6094M and showing the American Petroleum Institute Certified For Gasoline Engines starburst symbol. Failure to use the recommended oil can result in engine damage not covered by your warranty.**

GM Goodwrench® oil meets all the requirements for your vehicle.

If you are in an area of extreme cold, where the temperature falls below –20°F (–29°C), it is recommended that you use either an SAE 5W-30 synthetic oil or an SAE 0W-30 oil. Both will provide easier cold starting and better protection for your engine at extremely low temperatures.

Engine Oil Additives

Do not add anything to your oil. The recommended oils with the starburst symbol that meet GM Standard GM6094M are all you will need for good performance and engine protection.

Engine Oil Life System (Gasoline Engine)

When to Change Engine Oil

Your vehicle has a computer system that lets you know when to change the engine oil and filter. This is based on engine revolutions and engine temperature, and not on mileage. Based on driving conditions, the mileage at which an oil change will be indicated can vary considerably. For the oil life system to work properly, you must reset the system every time the oil is changed.

When the system has calculated that oil life has been diminished, it will indicate that an oil change is necessary. A CHANGE ENGINE OIL message will come on. See *DIC Warnings and Messages on page 3-54*. Change your oil as soon as possible within the next 600 miles (1 000 km). It is possible that, if you are driving under the best conditions, the oil life system may not indicate that an oil change is necessary for over a year. However, your engine oil and filter must be changed at least once a year and at this time the system must be reset. Your dealer has GM-trained service people who will perform this work using genuine GM parts and reset the system. It is also important to check your oil regularly and keep it at the proper level.

If the system is ever reset accidentally, you must change your oil at 3,000 miles (5 000 km) since your last oil change. Remember to reset the oil life system whenever the oil is changed.

How to Reset the Engine Oil Life System

The Engine Oil Life System calculates when to change your engine oil and filter based on vehicle use. Anytime your oil is changed, reset the system so it can calculate when the next oil change is required. If a situation occurs where you change your oil prior to a CHANGE ENGINE OIL message being turned on, reset the system.

To reset the Engine Oil Life System, do the following:

1. Turn the ignition key to RUN with the engine off.
2. Fully press and release the accelerator pedal three times within five seconds.

   If the OIL LIFE RESET message flashes for 10 seconds, the system is resetting.
3. Turn the key to LOCK.

If the CHANGE ENGINE OIL message comes back on when you start your vehicle, the engine oil life system has not reset. Repeat the procedure. If it still does not reset, see your dealer for service.

What to Do with Used Oil

Used engine oil contains certain elements that may be unhealthy for your skin and could even cause cancer. Do not let used oil stay on your skin for very long. Clean your skin and nails with soap and water, or a good hand cleaner. Wash or properly dispose of clothing or rags containing used engine oil. See the manufacturer's warnings about the use and disposal of oil products.

Used oil can be a threat to the environment. If you change your own oil, be sure to drain all the oil from the filter before disposal. Never dispose of oil by putting it in the trash, pouring it on the ground, into sewers, or into streams or bodies of water. Instead, recycle it by taking it to a place that collects used oil. If you have a problem properly disposing of your used oil, ask your dealer, a service station or a local recycling center for help.

Engine Air Cleaner/Filter

See *Engine Compartment Overview on page 5-14* for the location of the engine air cleaner/filter and the air filter restriction indicator, if equipped.

When to Inspect

If your vehicle is equipped with an air filter restriction indicator, it lets you know when the engine air cleaner/filter needs to be replaced. On vehicles with a restriction indicator, you should inspect the air filter restriction indicator at every oil change and replace the engine air cleaner/filter when the indicator tells you to.

On vehicles without an air filter restriction indicator, inspect the air cleaner/filter at the Maintenance II intervals and replace it at the first oil change after 50,000 miles (83 000 km). See *Scheduled Maintenance on page 6-4* for more information. If you are driving in dusty/dirty conditions, inspect the filter at each engine oil change.

How to Inspect

Vehicles with an Air Filter Restriction Indicator

Locate the air filter restriction indicator on the engine air cleaner/filter cover. When the indicator turns black or is in the red/orange “change” zone, replace the filter and reset the indicator. See the steps following to replace the engine air cleaner/filter and to reset the air filter restriction indicator.

Vehicles without an Air Filter Restriction Indicator

To inspect the air cleaner/filter, remove the engine air cleaner/filter from the vehicle using the steps following. When you have the engine air cleaner/filter removed, lightly shake it to release loose dust and dirt. If the engine air cleaner/filter remains caked with dirt, a new filter is required.

Replacing the Engine Air Cleaner/Filter and Resetting the Air Filter Restriction Indicator

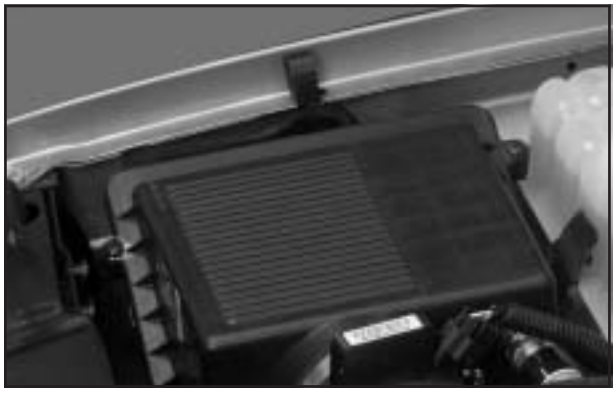

1. Locate the air cleaner/filter assembly on the front corner of the engine compartment on the passenger's side of the vehicle.
2. Loosen the screws on the cover of the housing and lift up the cover.

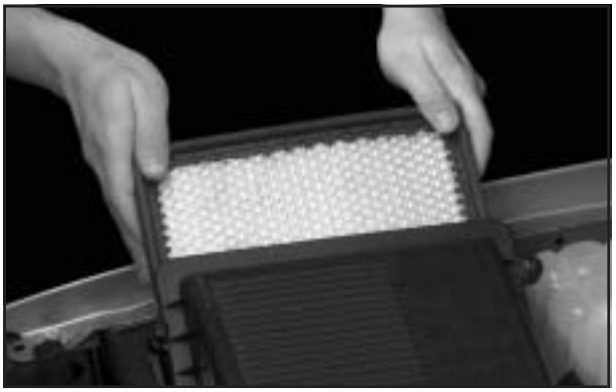

3. Remove the engine air cleaner/filter from the housing. Care should be taken to dislodge as little dirt as possible.
4. Clean the engine air cleaner/filter sealing surfaces and the housing.
5. Inspect or replace the engine air cleaner/filter.
6. Reinstall the cover and tighten the screws.
7. Reset the air filter restriction indicator, if equipped, by pressing the top button on the indicator.

⚠ CAUTION:

Operating the engine with the air cleaner/filter off can cause you or others to be burned. The air cleaner not only cleans the air; it helps to stop flame if the engine backfires. If it is not there and the engine backfires, you could be burned. Do not drive with it off, and be careful working on the engine with the air cleaner/filter off.

Automatic Transmission Fluid (Except Allison Transmission®)

When to Check and Change

A good time to check your automatic transmission fluid level is when the engine oil is changed.

Change both the fluid and filter every 50,000 miles (83 000 km) if the vehicle's GVWR is over 8,600 or if the vehicle is mainly driven under one or more of these conditions:

- In heavy city traffic where the outside temperature regularly reaches 90°F (32°C) or higher.
- In hilly or mountainous terrain.
- When doing frequent trailer towing.
- Uses such as found in taxi, police or delivery service.

If your vehicle's GVWR is not over 8,600 and you do not use your vehicle under any of these conditions, change the fluid and filter every 100,000 miles (166 000 km).

See *Scheduled Maintenance on page 6-4*.

How to Check

Because this operation can be a little difficult, you may choose to have this done at the dealership service department.

If you do it yourself, be sure to follow all the instructions here, or you could get a false reading on the dipstick.

Notice: **Too much or too little fluid can damage your transmission. Too much can mean that some of the fluid could come out and fall on hot engine part or exhaust system parts, starting a fire. Too little fluid could cause the transmission to overheat. Be sure to get an accurate reading if you check your transmission fluid.**

Wait at least 30 minutes before checking the transmission fluid level if you have been driving:

- When outside temperatures are above 90°F (32°C).
- At high speed for quite a while.
- In heavy traffic — especially in hot weather.
- While pulling a trailer.

To get the right reading, the fluid should be at normal operating temperature, which is 180°F to 200°F (82°C to 93°C).

Get the vehicle warmed up by driving about 15 miles (24 km) when outside temperatures are above 50°F (10°C). If it is colder than 50°F (10°C), drive the vehicle in THIRD (3) until the engine temperature gage moves and then remains steady for 10 minutes.

A cold fluid check can be made after the vehicle has been sitting for eight hours or more with the engine off, but this is used only as a reference. Let the engine run at idle for five minutes if outside temperatures are 50°F (10°C) or more. If it is colder than 50°F (10°C), you may have to idle the engine longer. Should the fluid level be low during this cold check, you must check the fluid hot before adding fluid. Checking the fluid hot will give you a more accurate reading of the fluid level.

Checking the Fluid Level

Prepare your vehicle as follows:

- Park your vehicle on a level place. Keep the engine running.
- With the parking brake applied, place the shift lever in PARK (P).
- With your foot on the brake pedal, move the shift lever through each gear range, pausing for about three seconds in each range. Then, position the shift lever in PARK (P).
- Let the engine run at idle for three minutes or more.

Then, without shutting off the engine, follow these steps:

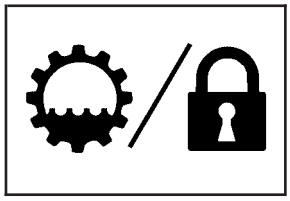

The transmission dipstick handle with this graphic is located at the rear of the engine compartment, on the passenger's side.

See *Engine Compartment Overview on page 5-14* for more information on location.

1. Flip the handle up and then pull out the dipstick and wipe it with a clean rag or paper towel.
2. Push it back in all the way, wait three seconds and then pull it back out again.

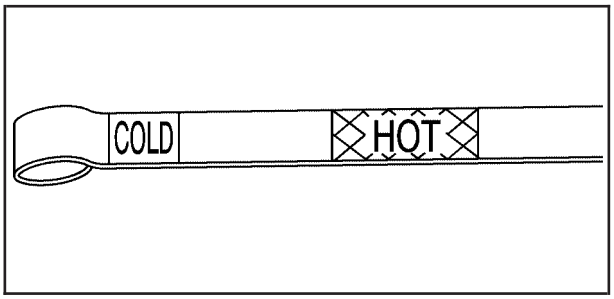

3. Check both sides of the dipstick, and read the lower level. The fluid level must be in the COLD area, below the cross-hatched area, for a cold check or in the HOT area or cross-hatched area for a hot check. Be sure to keep the dipstick pointed down to get an accurate reading.
4. If the fluid level is in the acceptable range, push the dipstick back in all the way; then flip the handle down to lock the dipstick in place.

Consistency of Readings

Always check the fluid level at least twice using the procedure described previously. Consistency (repeatable readings) is important to maintaining proper fluid level. If inconsistent readings persist, check the transmission breather hose to be sure it is clean and unclogged. If readings are still inconsistent, contact your dealer.

How to Add Fluid

Refer to the Maintenance Schedule to determine what kind of transmission fluid to use. See *Recommended Fluids and Lubricants on page 6-14*.

Add fluid only after checking the transmission fluid while it is hot. A cold check is used only as a reference. If the fluid level is low, add only enough of the proper fluid to bring the level up to the HOT area for a hot check. It does not take much fluid, generally less than one pint (0.5 L). *Do not overfill.*

Notice: **Use of automatic transmission fluid labeled other than DEXRON®-III, Approved for the H-Specification, may damage your vehicle, and the damages may not be covered by your warranty. Always use automatic transmission fluid labeled DEXRON®-III, Approved for the H-Specification.**

- After adding fluid, recheck the fluid level as described under “How to Check,” earlier in this section.
- When the correct fluid level is obtained, push the dipstick back in all the way; then flip the handle down to lock the dipstick in place.

Automatic Transmission Fluid (Allison Transmission®)

When to Check and Change

A good time to check your automatic transmission fluid level is when the engine oil is changed.

Change both the fluid and filter every 25,000 miles (41 500 km) if the vehicle is mainly driven under one or more of these conditions:

- In heavy city traffic where the outside temperature regularly reaches 90°F (32°C) or higher.
- In hilly or mountainous terrain.
- When doing frequent trailer towing.
- Uses such as found in taxi, police or delivery service.

If you do not use your vehicle under any of these conditions, change the fluid and filter every 50,000 miles (83 000 km).

See *Scheduled Maintenance on page 6-4*.

How to Check

Because this operation can be a little difficult, you may choose to have this done at the dealership service department.

If you do it yourself, be sure to follow all the instructions here, or you could get a false reading on the dipstick.

Notice: **Too much or too little fluid can damage your transmission. Too much can mean that some of the fluid could come out and fall on hot engine part or exhaust system parts, starting a fire. Too little fluid could cause the transmission to overheat. Be sure to get an accurate reading if you check your transmission fluid.**

Wait at least 30 minutes before checking the transmission fluid level if you have been driving:

- When outside temperatures are above 90°F (32°C).
- At high speed for quite a while.
- In heavy traffic — especially in hot weather.
- While pulling a trailer.

Checking the Fluid Level

Prepare your vehicle as follows:

- Park your vehicle on a level place. Keep the engine running.
- With the parking brake applied, place the shift lever in PARK (P).
- With your foot on the brake pedal, run the engine for at least once minute and shift to DRIVE (D). Then shift to NEUTRAL (N) and then REVERSE (R) to fill the hydraulic system. Then, position the shift lever in PARK (P).
- Allow the engine to run at idle (500–800 rpm). Slowly release the brake pedal.

Then, without shutting off the engine, follow these steps:

Cold Check Procedure

The purpose of the cold check is to determine if the transmission has enough fluid to be operated safely until a hot check can be made. The fluid level rises as fluid temperature increases. DO NOT fill above the COLD CHECK band if the transmission fluid is below normal operating temperatures.

1. Pull out the dipstick and wipe it with a clean rag or paper towel.
2. Push it back in all the way, wait three seconds and then pull it back out again.

3. Check the fluid level reading. Repeat the check procedure to verify the reading.
4. If the fluid level is within the COLD CHECK band, the transmission may be operated until the fluid is hot enough to perform a hot check. If the fluid level is not within the COLD CHECK band, add or drain fluid as necessary to bring the level into the middle of the COLD CHECK band.
5. Perform a hot check at the first opportunity after the normal operating temperature of 160°F (71°C) to 200°F (93°C) is reached.
6. If the fluid level is in the acceptable range, push the dipstick back in all the way.

Hot Check Procedure

The fluid must be hot to ensure an accurate check. The fluid level rises as temperature increases.

1. Operate the transmission in DRIVE (D) range until the normal operating temperature of 160°F (71°C) to 200°F (93°C) is reached.
2. Pull out the dipstick and wipe it with a clean rag or paper towel.
3. Push it back in all the way, wait three seconds and then pull it back out again. Repeat the check procedure to verify the reading.
4. Safe operating level is within the HOT RUN band on the dipstick. The width of the HOT RUN band represents approximately 1.06 quart (1.0 liter) of fluid at normal operating temperature.
5. If the fluid level is not within the HOT RUN band, add or drain fluid as necessary to bring the fluid level to within the HOT RUN band.
6. If the fluid level is in the acceptable range, push the dipstick back in all the way.

Consistency of Readings

Always check the fluid level at least twice using the procedures described previously. Consistency (repeatable readings) is important to maintaining proper fluid level. If inconsistent readings persist, check the transmission breather to be sure it is clean and unclogged. If readings are still inconsistent, contact your dealer.

How to Add Fluid

Refer to the Maintenance Schedule to determine what kind of transmission fluid to use. See *Recommended Fluids and Lubricants on page 6-14*.

Add fluid only after checking the transmission fluid while it is hot. A cold check is used only as a reference. If the fluid level is low, add only enough of the proper fluid to bring the level up to the HOT area for a hot check. It does not take much fluid, generally less than one pint (0.5 L). *Do not overfill.*

Notice: **Use of automatic transmission fluid labeled other than DEXRON®-III, Approved for the H-Specification, may damage your vehicle, and the damages may not be covered by your warranty. Always use automatic transmission fluid labeled DEXRON®-III, Approved for the H-Specification.**

- After adding fluid, recheck the fluid level as described under “How to Check,” earlier in this section.
- When the correct fluid level is obtained, push the dipstick back in all the way.

Manual Transmission Fluid

When to Check

A good time to have it checked is when the engine oil is changed. See your maintenance schedule to find out when to change your transmission fluid.

How to Check

Because this operation can be a little difficult, you may choose to have this done at your GM dealership service department.

If you do it yourself, be sure to follow all the instructions here, or you could get a false reading.

Notice: **Too much or too little fluid can damage your transmission. Too much can mean that some of the fluid could come out and fall on hot engine part or exhaust system parts, starting a fire. Too little fluid could cause the transmission to overheat. Be sure to get an accurate reading if you check your transmission fluid.**

Check the fluid level only when your engine is off, the vehicle is parked on a level place and the transmission is cool enough for you to rest your fingers on the transmission case.

Then, follow these steps:

5-speed for VORTEC™ 4300 V6 and 4800 V8 Engines Shown, Other Manual Transmissions Similar

1. Remove the filler plug.
2. Check that the lubricant level is up to the bottom of the filler plug hole.
3. If the fluid level is good, install the plug and be sure it is fully seated. If the fluid level is low, add more fluid as described in the next steps.

How to Add Fluid

Here is how to add fluid. Refer to the Maintenance Schedule to determine what kind of fluid to use. See *Recommended Fluids and Lubricants on page 6-14*.

1. Remove the filler plug.
2. Add fluid at the filler plug hole. Add only enough fluid to bring the fluid level up to the bottom of the filler plug hole.
3. Install the filler plug. Be sure the plug is fully seated.

Hydraulic Clutch

The hydraulic clutch linkage in your vehicle is self-adjusting. The clutch master cylinder reservoir is filled with hydraulic clutch fluid.

It is not necessary to regularly check clutch fluid unless you suspect there is a leak in the system. Adding fluid will not correct a leak.

A fluid loss in this system could indicate a problem. Have the system inspected and repaired.

When to Check and What to Use

The clutch master cylinder reservoir is located in the rear of the engine compartment on the driver's side of the vehicle. See *Engine Compartment Overview on page 5-14* for more information on location.

Refer to the Maintenance Schedule to determine how often you should check the fluid level in your clutch master cylinder reservoir and for the proper fluid. See *Owner Checks and Services on page 6-10* and *Recommended Fluids and Lubricants on page 6-14*.

How to Check and Add Fluid

The proper fluid should be added if the level does not reach the bottom of the diaphragm when it is in place in the reservoir. See the instructions on the reservoir cap.

Engine Coolant

The cooling system in your vehicle is filled with DEX-COOL® engine coolant. This coolant is designed to remain in your vehicle for five years or 150,000 miles (240 000 km), whichever occurs first, if you add only DEX-COOL® extended life coolant.

The following explains your cooling system and how to add coolant when it is low. If you have a problem with engine overheating, see *Engine Overheating on page 5-37*.

A 50/50 mixture of clean, drinkable water and DEX-COOL® coolant will:

- Give freezing protection down to –34°F (–37°C).
- Give boiling protection up to 265°F (129°C).
- Protect against rust and corrosion.
- Help keep the proper engine temperature.
- Let the warning lights and gages work as they should.

Notice: **Using coolant other than DEX-COOL® may cause premature engine, heater core or radiator corrosion. In addition, the engine coolant may require changing sooner, at 30,000 miles (50 000 km) or 24 months, whichever occurs first. Any repairs would not be covered by your warranty. Always use DEX-COOL® (silicate-free) coolant in your vehicle.**

What to Use

Use a mixture of one-half *clean, drinkable water* and one-half DEX-COOL® coolant which will not damage aluminum parts. If you use this coolant mixture, you do not need to add anything else.

⚠ CAUTION:

Adding only plain water to your cooling system can be dangerous. Plain water, or some other liquid such as alcohol, can boil before the proper coolant mixture will. Your vehicle's coolant warning system is set for the proper coolant mixture. With plain water or the wrong mixture, your engine could get too hot but you would not get the overheat warning. Your engine could catch fire and you or others could be burned. Use a 50/50 mixture of clean, drinkable water and DEX-COOL® coolant.

Notice: **If you use an improper coolant mixture, your engine could overheat and be badly damaged. The repair cost would not be covered by your warranty. Too much water in the mixture can freeze and crack the engine, radiator, heater core and other parts.**

If you have to add coolant more than four times a year, have your dealer check your cooling system.

Notice: **If you use the proper coolant, you do not have to add extra inhibitors or additives which claim to improve the system. These can be harmful.**

Checking Coolant

The coolant surge tank is located in the engine compartment on the passenger's side of the vehicle. See *Engine Compartment Overview on page 5-14* for more information on location.

⚠ CAUTION:

Turning the surge tank pressure cap when the engine and radiator are hot can allow steam and scalding liquids to blow out and burn you badly. Never turn the surge tank pressure cap — even a little — when the engine and radiator are hot.

The vehicle must be on a level surface. When your engine is cold, the coolant level should be at the FULL COLD mark.

If your vehicle is equipped with a low coolant sensor, and the LOW COOLANT LEVEL message comes on and stays on, it means you are low on engine coolant. See “LOW COOLANT LEVEL” under *DIC Warnings and Messages on page 3-54*.

Adding Coolant

If you need more coolant, add the proper DEX-COOL® coolant mixture *at the surge tank*, but only when the engine is cool.

⚠ CAUTION:

You can be burned if you spill coolant on hot engine parts. Coolant contains ethylene glycol, and it will burn if the engine parts are hot enough. Do not spill coolant on a hot engine.

When replacing the pressure cap, make sure it is hand-tight.

Coolant Surge Tank Pressure Cap

The coolant surge tank pressure cap must be fully installed on the coolant surge tank. See *Engine Compartment Overview on page 5-14* for more information on location.

Notice: **If the pressure cap is not tightly installed, coolant loss and possible engine damage may occur. Be sure the cap is properly and tightly secured.**

Engine Overheating

You will find a coolant temperature gage on your vehicle’s instrument panel. See *Engine Coolant Temperature Gage on page 3-42*.

In addition, you will find an ENGINE OVERHEATED and a REDUCED ENGINE POWER message in the Driver Information Center (DIC) on the instrument panel. See *DIC Warnings and Messages on page 3-54*.

If Steam Is Coming From Your Engine

⚠ CAUTION:

Steam from an overheated engine can burn you badly, even if you just open the hood. Stay away from the engine if you see or hear steam coming from it. Just turn it off and get everyone away from the vehicle until it cools down. Wait until there is no sign of steam or coolant before you open the hood.

If you keep driving when your engine is overheated, the liquids in it can catch fire. You or others could be badly burned. Stop your engine if it overheats, and get out of the vehicle until the engine is cool.

See *Overheated Engine Protection Operating Mode (V8 Engines Only) on page 5-39* for information on driving to a safe place in an emergency.

Notice: **If your engine catches fire because you keep driving with no coolant, your vehicle can be badly damaged. The costly repairs would not be covered by your warranty. See *Overheated Engine Protection Operating Mode (V8 Engines Only) on page 5-39* for information on driving to a safe place in an emergency.**

If No Steam Is Coming From Your Engine

An overheat warning, along with a low coolant condition, can indicate a serious problem.

If you get an engine overheat warning but see or hear no steam, the problem may not be too serious. Sometimes the engine can get a little too hot when you:

- Climb a long hill on a hot day.
- Stop after high-speed driving.
- Idle for long periods in traffic.
- Tow a trailer. See *Towing a Trailer on page 4-68*.

If you get the overheat warning with no sign of steam, try this for a minute or so:

1. If your air conditioner is on, turn it off.
2. Turn on your heater to full hot at the highest fan speed and open the windows as necessary.
3. If you are in a traffic jam, shift to NEUTRAL (N); otherwise, shift to the highest gear while driving — DRIVE (D) or THIRD (3).

If you no longer have the overheat warning, you can drive. Just to be safe, drive slower for about 10 minutes. If the warning does not come back on, you can drive normally.

If the warning continues, pull over, stop, and park your vehicle right away.

If there is still no sign of steam and your vehicle is equipped with an engine-driven cooling fan, push down the accelerator until the engine speed is about twice as fast as normal idle speed for at least three minutes while you are parked.

If there is still no sign of steam and your vehicle is equipped with an electric engine cooling fan, idle the engine for three minutes while you are parked.

If you still have the warning, *turn off the engine and get everyone out of the vehicle* until it cools down. Also, see “Overheated Engine Protection Operating Mode” later in this section.

You may decide not to lift the hood but to get service help right away.

Overheated Engine Protection Operating Mode (V8 Engines Only)

If an overheated engine condition exists and the REDUCED ENGINE POWER message is displayed, an overheat protection mode which alternates firing groups of cylinders helps prevent engine damage. In this mode, you will notice a loss in power and engine performance. This operating mode allows your vehicle to be driven to a safe place in an emergency. Driving extended miles (km) and/or towing a trailer in the overheat protection mode should be avoided.

Notice: **After driving in the overheated engine protection operating mode, to avoid engine damage, allow the engine to cool before attempting any repair. The engine oil will be severely degraded. Repair the cause of coolant loss, change the oil and reset the oil life system. See *Engine Oil (Gasoline Engine) on page 5-20*.**

Cooling System

When you decide it is safe to lift the hood, here is what you will see:

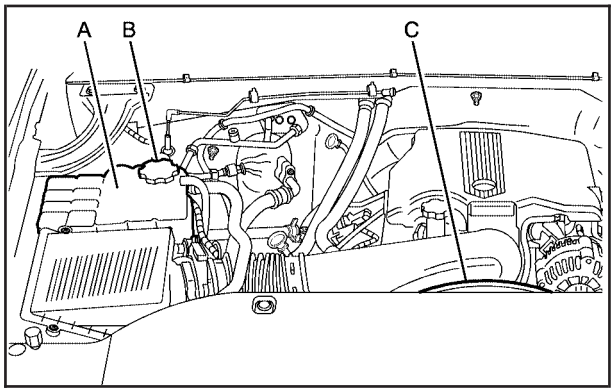

8100 V8 Engines

A. Coolant Surge Tank
B. Coolant Surge Tank Pressure Cap
C. Engine-Driven Cooling Fan

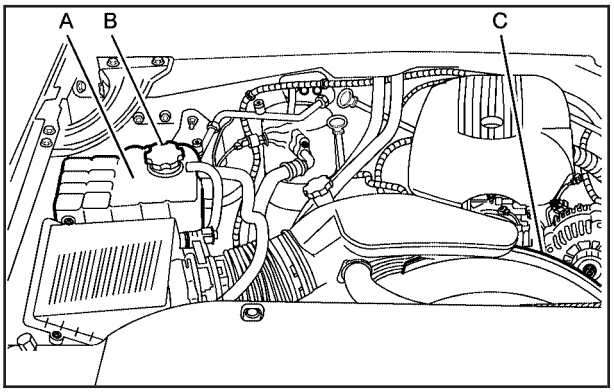

All Other Engines

A. Coolant Surge Tank
B. Coolant Surge Tank Pressure Cap
C. Electric Engine Cooling Fan (If Equipped)

⚠ CAUTION:

An electric fan under the hood can start up and injure you even when the engine is not running. Keep hands, clothing and tools away from any underhood electric fan.

If the coolant inside the coolant surge tank is boiling, do not do anything else until it cools down. The vehicle should be parked on a level surface.

The coolant level should be at or above the FULL COLD mark. If it is not, you may have a leak at the pressure cap or in the radiator hoses, heater hoses, radiator, water pump or somewhere else in the cooling system.

⚠ CAUTION:

Heater and radiator hoses, and other engine parts, can be very hot. Do not touch them. If you do, you can be burned.

Do not run the engine if there is a leak. If you run the engine, it could lose all coolant. That could cause an engine fire, and you could be burned. Get any leak fixed before you drive the vehicle.

If there seems to be no leak and your vehicle is equipped with an electric engine cooling fan, with the engine on check to see if the cooling fan is running. If it is not, your vehicle needs service. Turn off the engine.

If there seems to be no leak and your vehicle is equipped with an engine-driven cooling fan, start the engine again and see if the fan speed increases when idle speed is doubled by pushing the accelerator pedal down. If it does not, your vehicle needs service. Turn off the engine.

Notice: **Engine damage from running your engine without coolant is not covered by your warranty. See *Overheated Engine Protection Operating Mode (V8 Engines Only) on page 5-39* for information on driving to a safe place in an emergency.**

Notice: **Using coolant other than DEX-COOL® may cause premature engine, heater core or radiator corrosion. In addition, the engine coolant may require changing sooner, at 30,000 miles (50 000 km) or 24 months, whichever occurs first. Any repairs would not be covered by your warranty. Always use DEX-COOL® (silicate-free) coolant in your vehicle.**

How to Add Coolant to the Coolant Surge Tank for Gasoline Engines

If you have not found a problem yet, check to see if coolant is visible in the surge tank. If coolant is visible but the coolant level is not at or above the FULL COLD mark, add a 50/50 mixture of *clean, drinkable water* and DEX-COOL® coolant at the coolant surge tank, but be sure the cooling system, including the coolant surge tank pressure cap, is cool before you do it. See *Engine Coolant on page 5-35* for more information.

If no coolant is visible in the surge tank, add coolant as follows:

⚠ CAUTION:

Steam and scalding liquids from a hot cooling system can blow out and burn you badly. They are under pressure, and if you turn the coolant surge tank pressure cap — even a little — they can come out at high speed. Never turn the cap when the cooling system, including the coolant surge tank pressure cap, is hot. Wait for the cooling system and coolant surge tank pressure cap to cool if you ever have to turn the pressure cap.

⚠ CAUTION:

Adding only plain water to your cooling system can be dangerous. Plain water, or some other liquid such as alcohol, can boil before the proper coolant mixture will. Your vehicle's coolant warning system is set for the proper coolant mixture. With plain water or the wrong mixture, your engine could get too hot but you would not get the overheat warning. Your engine could catch fire and you or others could be burned. Use a 50/50 mixture of clean, drinkable water and a proper coolant.

Notice: **In cold weather, water can freeze and crack the engine, radiator, heater core and other parts. Use the recommended coolant and the proper coolant mixture.**

⚠ CAUTION:

You can be burned if you spill coolant on hot engine parts. Coolant contains ethylene glycol and it will burn if the engine parts are hot enough. Do not spill coolant on a hot engine.

1. You can remove the coolant surge tank pressure cap when the cooling system, including the coolant surge tank pressure cap and upper radiator hose, is no longer hot.

Turn the pressure cap slowly counterclockwise (left) about one full turn. If you hear a hiss, wait for that to stop. A hiss means there is still some pressure left.

2. Then keep turning the pressure cap slowly, and remove it.

3. Fill the coolant surge tank with the proper mixture, to the FULL COLD mark.

4. With the coolant surge tank pressure cap off, start the engine and let it run until you can feel the upper radiator hose getting hot. Watch out for the engine cooling fan.

   By this time, the coolant level inside the coolant surge tank may be lower. If the level is lower, add more of the proper mixture to the coolant surge tank until the level reaches the FULL COLD mark.

5. Then replace the pressure cap. Be sure the pressure cap is hand-tight and fully seated.

Engine Fan Noise

If your vehicle is equipped with a clutched engine cooling fan, when the clutch is engaged, the fan spins faster to provide more air to cool the engine. In most everyday driving conditions, the fan is spinning slower and the clutch is not fully engaged. This improves fuel economy and reduces fan noise. Under heavy vehicle loading, trailer towing, and/or high outside temperatures, the fan speed increases as the clutch more fully engages, so you may hear an increase in fan noise. This is normal and should not be mistaken as the transmission slipping or making extra shifts. It is merely the cooling system functioning properly. The fan will slow down when additional cooling is not required and the clutch disengages.

You may also hear this fan noise when you start the engine. It will go away as the fan clutch partially disengages.

If your vehicle is equipped with electric cooling fans, you may hear the fans spinning at low speed during most everyday driving. The fans may turn off if no cooling is required. Under heavy vehicle loading, trailer towing, and/or high outside temperatures, or if you are operating your air conditioning system, the fans change to high speed and you may hear an increase in fan noise. This is normal and indicates that the cooling system is functioning properly. The fans will change to low speed when additional cooling is no longer required.

Power Steering Fluid

8100 V8 engine

All other engines

See *Engine Compartment Overview on page 5-14* for reservoir location.

When to Check Power Steering Fluid

It is not necessary to regularly check power steering fluid unless you suspect there is a leak in the system or you hear an unusual noise. A fluid loss in this system could indicate a problem. Have the system inspected and repaired.

How to Check Power Steering Fluid

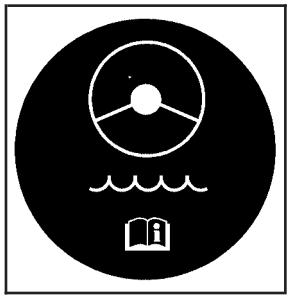

Locate the cap with this symbol. See *Engine Compartment Overview on page 5-14* for more information on location.

To check the power steering fluid, do the following:

1. Turn the key off and let the engine compartment cool down.
2. Wipe the cap and the top of the reservoir clean.
3. Unscrew the cap and wipe the dipstick with a clean rag.
4. Replace the cap and completely tighten it.
5. Remove the cap again and look at the fluid level on the dipstick.

The level should be at the FULL COLD mark. If necessary, add only enough fluid to bring the level up to the mark.

What to Use

To determine what kind of fluid to use, see *Recommended Fluids and Lubricants on page 6-14*. Always use the proper fluid. Failure to use the proper fluid can cause leaks and damage hoses and seals.

Windshield Washer Fluid

What to Use

When you need windshield washer fluid, be sure to read the manufacturer's instructions before use. If you will be operating your vehicle in an area where the temperature may fall below freezing, use a fluid that has sufficient protection against freezing.

Adding Washer Fluid

Your vehicle has a low washer fluid message that comes on when the washer fluid is low. The message is displayed for 15 seconds at the start of each ignition cycle. When the CHECK WASHER FLUID message is displayed, you will need to add washer fluid to the windshield washer fluid reservoir.

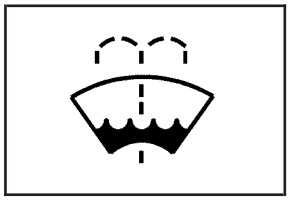

Open the cap with the washer symbol on it. Add washer fluid until the tank is full. See *Engine Compartment Overview on page 5-14* for reservoir location.

Notice:

- **When using concentrated washer fluid, follow the manufacturer's instructions for adding water.**
- **Do not mix water with ready-to-use washer fluid. Water can cause the solution to freeze and damage your washer fluid tank and other parts of the washer system. Also, water does not clean as well as washer fluid.**
- **Fill your washer fluid tank only three-quarters full when it is very cold. This allows for expansion if freezing occurs, which could damage the tank if it is completely full.**
- **Do not use engine coolant (antifreeze) in your windshield washer. It can damage your washer system and paint.**

Brakes

Brake Fluid

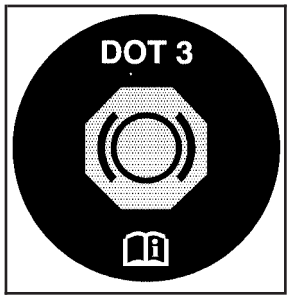

Your brake master cylinder reservoir is filled with DOT-3 brake fluid. See *Engine Compartment Overview on page 5-14* for the location of the reservoir.

There are only two reasons why the brake fluid level in the reservoir might go down. The first is that the brake fluid goes down to an acceptable level during normal brake lining wear. When new linings are put in, the fluid level goes back up. The other reason is that fluid is leaking out of the brake system. If it is, you should have your brake system fixed, since a leak means that sooner or later your brakes will not work well, or will not work at all.

So, it is not a good idea to top off your brake fluid. Adding brake fluid will not correct a leak. If you add fluid when your linings are worn, then you will have too much fluid when you get new brake linings. You should add or remove brake fluid, as necessary, only when work is done on the brake hydraulic system.

⚠ CAUTION:

If you have too much brake fluid, it can spill on the engine. The fluid will burn if the engine is hot enough. You or others could be burned, and your vehicle could be damaged. Add brake fluid only when work is done on the brake hydraulic system. See “Checking Brake Fluid” in this section.

Refer to the Maintenance Schedule to determine when to check your brake fluid. See *Scheduled Maintenance on page 6-4*.

Checking Brake Fluid

You can check the brake fluid without taking off the cap.

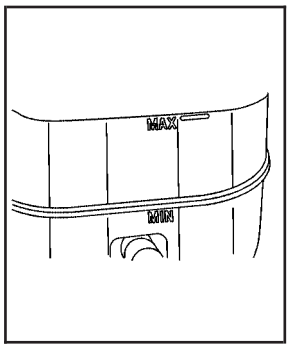

Just look at the brake fluid reservoir. The fluid level should be above MIN. If it is not, have your brake system checked to see if there is a leak.

After work is done on the brake hydraulic system, make sure the level is above the MIN but not over the MAX mark.

What to Add

When you do need brake fluid, use only DOT-3 brake fluid. Use new brake fluid from a sealed container only. See *Recommended Fluids and Lubricants on page 6-14*.

Always clean the brake fluid reservoir cap and the area around the cap before removing it. This will help keep dirt from entering the reservoir.

⚠ CAUTION:

With the wrong kind of fluid in your brake system, your brakes may not work well, or they may not even work at all. This could cause a crash. Always use the proper brake fluid.

Notice:

- **Using the wrong fluid can badly damage brake system parts. For example, just a few drops of mineral-based oil, such as engine oil, in your brake system can damage brake system parts so badly that they will have to be replaced. Do not let someone put in the wrong kind of fluid.**
- **If you spill brake fluid on your vehicle's painted surfaces, the paint finish can be damaged. Be careful not to spill brake fluid on your vehicle. If you do, wash it off immediately. See *Appearance Care on page 5-112*.**

Brake Wear

Your vehicle has front disc brakes and may have rear drum brakes or rear disc brakes.

Disc brake pads have built-in wear indicators that make a high-pitched warning sound when the brake pads are worn and new pads are needed. The sound may come and go or be heard all the time your vehicle is moving, except when you are pushing on the brake pedal firmly.

⚠ CAUTION:

The brake wear warning sound means that soon your brakes will not work well. That could lead to an accident. When you hear the brake wear warning sound, have your vehicle serviced.

Notice: **Continuing to drive with worn-out brake pads could result in costly brake repair.**

Some driving conditions or climates may cause a brake squeal when the brakes are first applied or lightly applied. This does not mean something is wrong with your brakes.

Properly torqued wheel nuts are necessary to help prevent brake pulsation. When tires are rotated, inspect brake pads for wear and evenly tighten wheel nuts in the proper sequence to GM torque specifications.

If you have rear drum brakes, they do not have wear indicators, but if you ever hear a rear brake rubbing noise, have the rear brake linings inspected immediately. Rear brake drums should be removed and inspected each time the tires are removed for rotation or changing. Drum brakes have an inspection hole to inspect lining wear during scheduled maintenance. When you have the front brake pads replaced, have the rear brakes inspected, too.

Brake linings should always be replaced as complete axle sets.

Brake Pedal Travel

See your dealer if the brake pedal does not return to normal height, or if there is a rapid increase in pedal travel. This could be a sign of brake trouble.

Brake Adjustment

Every time you make a brake stop, your brakes adjust for wear.

Replacing Brake System Parts

The braking system on a vehicle is complex. Its many parts have to be of top quality and work well together if the vehicle is to have really good braking. Your vehicle was designed and tested with top-quality GM brake parts. When you replace parts of your braking system — for example, when your brake linings wear down and you need new ones put in — be sure you get new approved GM replacement parts. If you do not, your brakes may no longer work properly. For example, if someone puts in brake linings that are wrong for your vehicle, the balance between your front and rear brakes can change — for the worse. The braking performance you have come to expect can change in many other ways if someone puts in the wrong replacement brake parts.

Battery

Your vehicle has a maintenance free battery. When it is time for a new battery, get one that has the replacement number shown on the original battery's label. We recommend an ACDelco® replacement battery. See *Engine Compartment Overview on page 5-14* for battery location.

Warning: Battery posts, terminals and related accessories contain lead and lead compounds, chemicals known to the State of California to cause cancer and reproductive harm. Wash hands after handling.

Vehicle Storage

If you are not going to drive your vehicle for 25 days or more, remove the black, negative (–) cable from the battery. This will help keep your battery from running down.

⚠ CAUTION:

Batteries have acid that can burn you and gas that can explode. You can be badly hurt if you are not careful. See *Jump Starting on page 5-53* for tips on working around a battery without getting hurt.

Also, for your audio system, see *Theft-Deterrent Feature on page 3-123*.

Jump Starting

If your battery (or batteries) has run down, you may want to use another vehicle and some jumper cables to start your vehicle. Be sure to use the following steps to do it safely.

⚠ CAUTION:

Batteries can hurt you. They can be dangerous because:

- **They contain acid that can burn you.**
- **They contain gas that can explode or ignite.**
- **They contain enough electricity to burn you.**

If you do not follow these steps exactly, some or all of these things can hurt you.

Notice: **Ignoring these steps could result in costly damage to your vehicle that would not be covered by your warranty.**

Trying to start your vehicle by pushing or pulling it will not work, and it could damage your vehicle.

1. Check the other vehicle. It must have a 12-volt battery with a negative ground system.

Notice: **If the other vehicle's system is not a 12-volt system with a negative ground, both vehicles can be damaged. Only use vehicles with 12-volt systems with negative grounds to jump start your vehicle.**

2. If you have a vehicle with a diesel engine with two batteries (or more), you should know before you begin that, especially in cold weather, you may not be able to get enough power from a single battery in another vehicle to start your diesel engine.

   If your vehicle has more than one battery, use the battery that is closer to the starter — this will reduce electrical resistance.

3. Get the vehicles close enough so the jumper cables can reach, but be sure the vehicles are not touching each other. If they are, it could cause a ground connection you do not want. You would not be able to start your vehicle, and the bad grounding could damage the electrical systems.

   To avoid the possibility of the vehicles rolling, set the parking brake firmly on both vehicles involved in the jump start procedure. Put an automatic transmission in PARK (P) or a manual transmission in NEUTRAL before setting the parking brake. If you have a four-wheel-drive vehicle, be sure the transfer case is in a drive gear, not in NEUTRAL.

Notice: **If you leave your radio or other accessories on during the jump starting procedure, they could be damaged. The repairs would not be covered by your warranty. Always turn off your radio and other accessories when jump starting your vehicle.**

4. Turn off the ignition on both vehicles. Unplug unnecessary accessories plugged into the cigarette lighter or accessory power outlets. Turn off the radio and all lamps that are not needed. This will avoid sparks and help save both batteries. And it could save the radio!

5. Open the hoods and locate the positive (+) and negative (–) terminal locations of the other vehicle.

   Your vehicle has a remote positive (+) jump starting terminal and a remote negative (–) jump starting terminal. You should always use these remote terminals instead of the terminals on the battery.

   The remote positive (+) terminal is located behind a red plastic cover, if equipped, near the engine accessory drive bracket. To uncover the remote positive (+) terminal, open the red plastic cover, if equipped.

   The remote negative (–) terminal is located on the engine drive bracket on all V8 and diesel engines, and on the thermostat housing on the 8.1L engine. On V8 engines it is marked GND.

   On V6 engines the remote negative (–) terminal is located on a tab attached to the engine accessory drive bracket where it is marked GND.

   See *Engine Compartment Overview on page 5-14* for more information on the location of the remote positive (+) and remote negative (–) terminals.

⚠ CAUTION:

Using a match near a battery can cause battery gas to explode. People have been hurt doing this, and some have been blinded. Use a flashlight if you need more light.

Be sure the battery has enough water. You do not need to add water to the battery installed in your new vehicle. But if a battery has filler caps, be sure the right amount of fluid is there. If it is low, add water to take care of that first. If you do not, explosive gas could be present.

Battery fluid contains acid that can burn you. Do not get it on you. If you accidentally get it in your eyes or on your skin, flush the place with water and get medical help immediately.

⚠ CAUTION:

Fans or other moving engine parts can injure you badly. Keep your hands away from moving parts once the engine is running.

6. Check that the jumper cables do not have loose or missing insulation. If they do, you could get a shock. The vehicles could be damaged too.

   Before you connect the cables, here are some basic things you should know. Positive (+) will go to positive (+) or a remote positive terminal (+) if the vehicle has one. Negative (–) will go to a heavy, unpainted metal engine part or a remote negative (–) terminal if the vehicle has one.

   Do not connect positive (+) to negative (–) or you will get a short that would damage the battery and maybe other parts too. And do not connect the negative (–) cable to the negative (–) terminal on the dead battery because this can cause sparks.

   On vehicles equipped with dual batteries, make all battery connections to the remote positive (+) and remote negative (–) terminals.

7. Connect the red positive (+) cable to the positive (+) terminal of the vehicle with the dead battery. Use a remote positive (+) terminal if the vehicle has one.

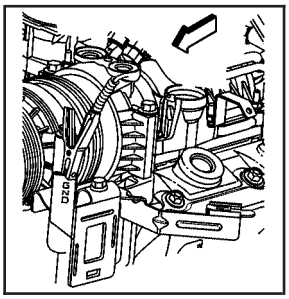

V8 engine shown, other engines similar

11. Connect the other end of the negative (–) cable to the remote negative (–) terminal, marked GND, on the vehicle with the dead battery. See *Engine Compartment Overview on page 5-14* for the location of your vehicle's remote negative (–) terminal.

8. Do not let the other end touch metal. Connect it to the positive (+) terminal of the good battery. Use a remote positive (+) terminal if the vehicle has one.
9. Now connect the black negative (–) cable to the negative (–) terminal of the good battery. Use a remote negative (–) terminal if the vehicle has one. The vehicle's remote negative (–) terminal is marked GND.
10. Do not let the other end touch anything until the next step. The other end of the negative (–) cable *does not* go to the dead battery. It goes to a heavy unpainted metal engine part of the vehicle with the dead battery, or to a remote negative (–) terminal if the vehicle has one.
12. Now start the vehicle with the good battery and run the engine for a while.
13. Try to start the vehicle that had the dead battery. If it will not start after a few tries, it probably needs service.

Notice: **If the jumper cables are removed in the wrong order, electrical shorting may occur and damage the vehicle. The repairs would not be covered by your warranty. Remove the jumper cables in the correct order, making sure that the cables do not touch each other or other metal.**

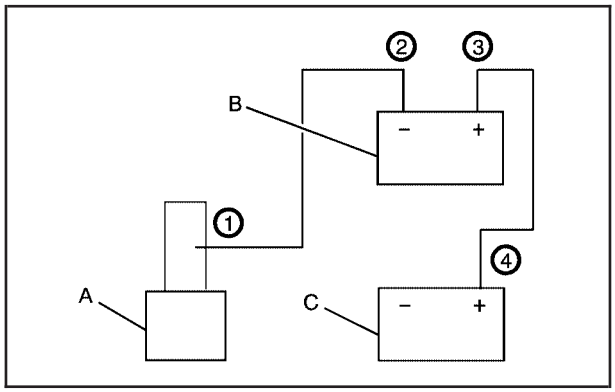

Jumper Cable Removal

A. Heavy, Unpainted Metal Engine Part or Remote Negative (–) Terminal

B. Good Battery or Remote Positive (+) and Remote Negative (–) Terminals

C. Dead Battery or Remote Positive (+) Terminal

To disconnect the jumper cables from both vehicles do the following:

1. Disconnect the black negative (–) cable from the vehicle that had the bad battery.
2. Disconnect the black negative (–) cable from the vehicle with the good battery.
3. Disconnect the red positive (+) cable from the vehicle with the good battery.
4. Disconnect the red positive (+) cable from the other vehicle.
5. Return the positive (+) remote terminal cover, if equipped, to its original position.

Rear Axle

When to Check Lubricant

It is not necessary to regularly check rear axle fluid unless you suspect there is a leak or you hear an unusual noise. A fluid loss could indicate a problem. Have it inspected and repaired.

How to Check Lubricant

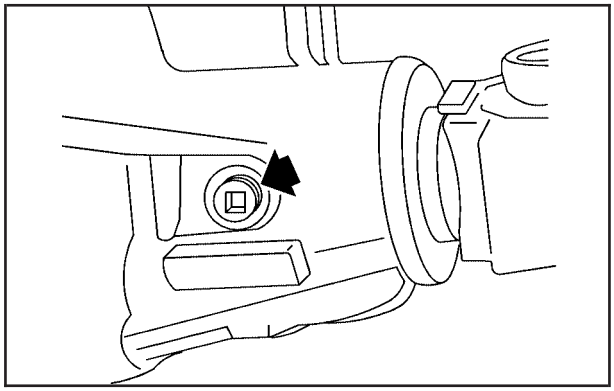

1500 Series Shown, 2500 Series Similar

To get an accurate reading, the vehicle should be on a level surface.

- The proper level for the 1500 Series is from 5/8 inch to 1 5/8 inch (15 mm to 40 mm) below the bottom of the filler plug hole.
- The proper level for the 1500HD Series, 2500 Series, 2500HD, and 3500 Series is from 0 to 1/2 inch (0 to 13 mm) below the bottom of the filler plug hole.
- The proper level for the 1500 and 2500 Series vehicles with QUADRASTEER™ (4-Wheel Steer) is from 0 to 1/4 inch (0 to 6 mm) below the filler plug hole.

Add only enough fluid to reach the proper level.

What to Use

To determine what kind of lubricant to use see *Recommended Fluids and Lubricants on page 6-14*.

Four-Wheel Drive

Lubricant checks in this section also apply to these vehicles. There are two additional systems that need lubrication.

Transfer Case

When to Check Lubricant

It is not necessary to regularly check transfer case fluid unless you suspect there is a leak or you hear an unusual noise. A fluid loss could indicate a problem. Have it inspected and repaired.

How to Check Lubricant

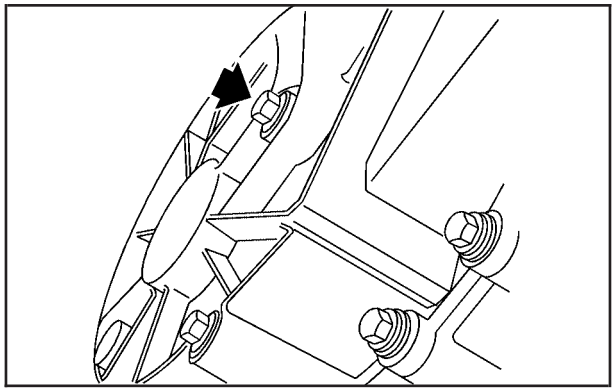

Manual Transfer Case

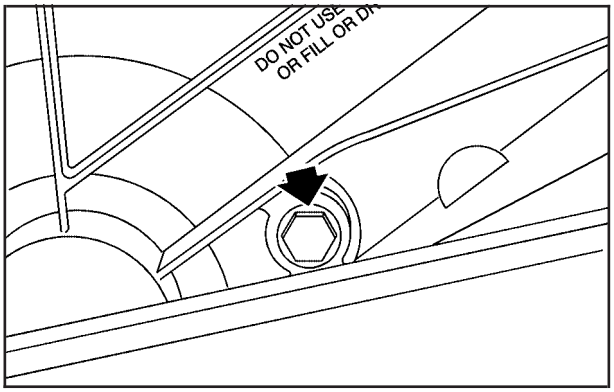

Automatic Transfer Case

To get an accurate reading, the vehicle should be on a level surface.

If the level is below the bottom of the filler plug hole, located on the transfer case, you'll need to add some lubricant. Add enough lubricant to raise the level to the bottom of the filler plug hole. Use care not to overtighten the plug.

When to Change Lubricant

Refer to the Maintenance Schedule to determine how often to change the lubricant. See *Scheduled Maintenance on page 6-4*.

What to Use

Refer to the Maintenance Schedule to determine what kind of lubricant to use. See *Recommended Fluids and Lubricants on page 6-14*.

Front Axle

When to Check Lubricant

It is not necessary to regularly check front axle fluid unless you suspect there is a leak or you hear an unusual noise. A fluid loss could indicate a problem. Have it inspected and repaired.

How to Check Lubricant

To get an accurate reading, the vehicle should be on a level surface.

If the level is below the bottom of the filler plug hole, located on the front axle, you may need to add some lubricant:

- When the differential is cold, add enough lubricant to raise the level to 0 to 3/8 inch (9.5 mm) below the filler plug hole.

- When the differential is at operating temperature (warm), add enough lubricant to raise the level to the bottom of the filler plug hole.

What to Use

To determine what kind of lubricant to use see *Recommended Fluids and Lubricants on page 6-14*.

Noise Control System

Tampering with Noise Control System Prohibited

The following information relates to compliance with federal noise emission standards for vehicles with a Gross Vehicle Weight Rating (GVWR) of more than 10,000 lbs (4 536 kg). The Maintenance Schedule provides information on maintaining the noise control system to minimize degradation of the noise emission control system during the life of your vehicle. The noise control system warranty is given in your warranty booklet.

These standards apply only to vehicles sold in the United States.

Federal law prohibits the following acts or the causing thereof:

1. The removal or rendering inoperative by any person, other than for purposes of maintenance, repair or replacement, of any device or element of design incorporated into any new vehicle for the purpose of noise control, prior to its sale or delivery to the ultimate purchaser or while it is in use; or
2. The use of the vehicle after such device or element of design has been removed or rendered inoperative by any person.

Among those acts presumed to constitute tampering are the acts listed below.

Insulation:

- Removal of the noise shields or any underhood insulation.

Engine:

- Removal or rendering engine speed governor (if equipped) inoperative so as to allow engine speed to exceed manufacturer specifications.

Fan and Drive:

- Removal of fan clutch (if equipped) or rendering clutch inoperative.
- Removal of the fan shroud (if equipped).

Air Intake:

- Removal of the air cleaner silencer.
- Modification of the air cleaner.

Exhaust:

- Removal of the muffler and/or resonator.
- Removal of the exhaust pipes and exhaust pipe clamps.

Bulb Replacement

For the proper type of replacement bulbs, see *Replacement Bulbs on page 5-71*.

For any bulb changing procedure not listed in this section, contact your dealer.

Halogen Bulbs

⚠ CAUTION:

Halogen bulbs have pressurized gas inside and can burst if you drop or scratch the bulb. You or others could be injured. Be sure to read and follow the instructions on the bulb package.

Headlamps

To replace a headlamp bulb, do the following:

1. If your vehicle is equipped with two pins, remove the two pins on the top of the headlamp assembly. To remove the pins, turn the outer pin outward and pull it straight up. To remove the inner pin, turn it in and pull it straight up.

If your vehicle has one pin on the headlamp assembly, remove the pin. To remove the pin, turn the pin up and pull it out straight out.

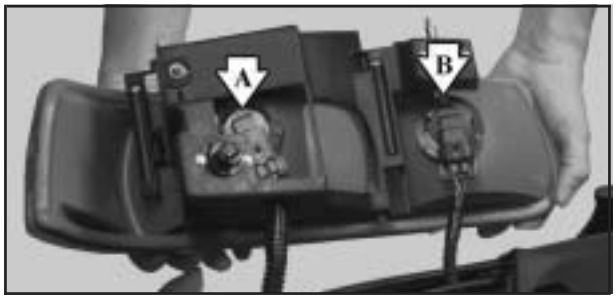

A. Low-Beam Headlamp
B. High-Beam Headlamp

2. Pull the headlamp assembly out.
3. Unplug the electrical connector.
4. Turn the old bulb counterclockwise and remove it from the headlamp assembly.
5. Put the new bulb into the assembly and turn it clockwise until it is tight. Use care not to touch the bulb with your fingers or hands.
6. Plug in the electrical connector.
7. Put the headlamp assembly back into the vehicle.
8. Install and tighten the two pins. If your vehicle has one pin, install it and turn it into the locking feature.

Front Turn Signal, Sidemarker and Daytime Running Lamps

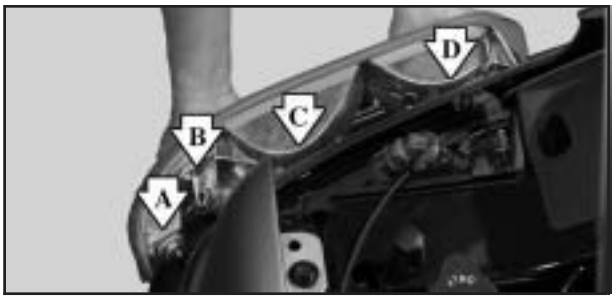

A. Sidemarker Lamp
B. Retainer Clip
C. Front Turn Signal Lamp
D. Daytime Running Lamp (DRL)

To replace a front turn signal, sidemarker or DRL bulb, do the following:

1. Remove the headlamp assembly as described previously. See *Headlamps on page 5-63* for more information.

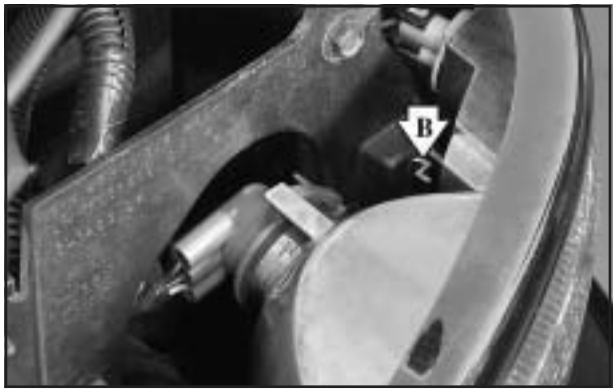

2. Press the retainer clip (B), located behind the turn signal housing, towards the outside of the vehicle.
3. Pull the turn signal housing out of the vehicle.
4. Press the locking release lever, turn the bulb socket counterclockwise and remove it from the turn signal housing.
5. Remove the old bulb from the bulb socket.
6. Put a new bulb into the bulb socket. Use care not to touch the bulb with your fingers or hands.
7. Put the bulb socket back into the turn signal housing and turn it clockwise until it locks.
8. Put the turn signal housing back into the vehicle placing the hook and posts on the inner side into the alignment holes first, then the outer side into the retainer bracket until you hear a click.
9. Put the headlamp assembly back into the vehicle.

Roof Marker Lamps

To replace a roof marker lamp bulb, do the following:

1. Remove the two screws and lift off the lens.

2. Remove the six screws on the center roof marker lamps.
3. Turn the old bulb counterclockwise to remove it from the socket.

4. Put a new bulb into the socket and turn clockwise until it locks in place.

5. Reinstall the lens and tighten the screws.

Center High-Mounted Stoplamp (CHMSL) and Cargo Lamp

To replace a center high-mounted stoplamp (CHMSL) bulb, do the following:

1. Remove the screws and lift off the lamp assembly.

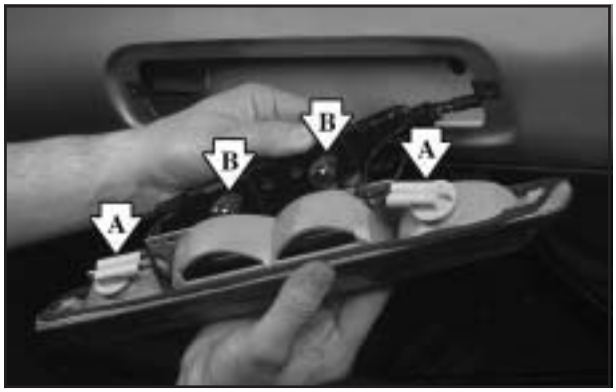

A. Cargo Lamps
B. Center High-Mounted Stoplamps

2. Remove the CHMSL bulb holder back plate from the housing by pressing the release tabs.
3. Remove the CHMSL bulb by pulling the bulb straight out from the holder back plate.

   Remove a cargo bulb by turning the socket counterclockwise and pulling the bulb straight out.
4. If a CHMSL bulb is replaced, put the new bulb into the socket and press it in until it is tight.

   If a cargo lamp is replaced, put a new cargo lamp bulb into the socket and press it in until it is tight before turning the socket counterclockwise.
5. Put the bulb holder back plate into the lamp housing.
6. Reinstall the lamp assembly and tighten the screws.

Pickup Box Identification and Fender Marker Lamps

To replace a pickup box identification or fender marker lamp bulb, do the following:

1. Remove the screws and lamp assembly.
2. Unplug the lamp assembly harness.
3. Gently pry the individual lamp from the lamp housing.
4. Unplug the lamp.
5. Plug in a new lamp and snap it into the housing.
6. Reinstall the lamp housing.

Taillamps

To replace a taillamp bulb, do the following:

1. Open the tailgate. *Tailgate on page 2-15* for more information.

2. Remove the two rear lamp assembly screws near the tailgate latch and pull out the lamp assembly.

3. Determine which of the following taillamp assembly applies to your vehicle.

A. Stoplamp
B. Turn Signal
C. Back-up Lamp

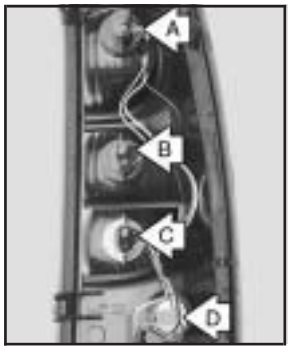

A. Stoplamp
B. Turn Signal Lamp
C. Back-up Lamp
D. Sidemarker Lamp

4. Press the release tab, if equipped, and turn the bulb socket counterclockwise to remove it from the taillamp housing.

5. Pull the old bulb straight out from the socket.
6. Press a new bulb into the socket and turn the socket clockwise into the taillamp housing.
7. Reinstall the rear lamp assembly.
8. Close the tailgate.

Taillamps (Chassis Cab Models)

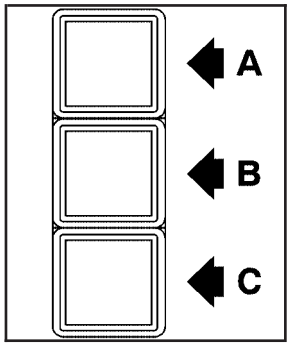

A. Turn Signal Lamp
B. Stoplamp
C. Back-up Lamp

To replace a taillamp bulb for chassis cab models, do the following:

1. Peel the rubber seal away from the lens using your hands.
2. Lift the lens off the lamp assembly.
3. Pull the old bulb straight out from the socket.
4. Put a new bulb into the socket and press it in until it is tight.
5. Reinstall the lens and the lens seal.

Replacement Bulbs

Exterior Lamp	Bulb Number
Back-up Lamp	3157
Back-up Lamp*	1156
Cargo Lamp	912
Center High-Mounted Stoplamp (CHMSL)	912
Daytime Running Lamps (DRL)	4114K
Fender Marker Lamps	194
Front Parking and Turn Lamp	3457A
Front Roof Marker Lamps	194
Headlamps	
High-Beam	9005
Low-Beam	9006
Rear Marker Lamp, Taillamp and Stoplamp*	3157
Rear Turn Signal Lamp	3157
Rear Turn Signal Lamp*	1156
Sidemarker Lamp (If Equipped)	194
Stoplamp and Taillamp*	1157
* Chassis Cab Models	

For replacement bulbs not listed here, contact your dealer.

Windshield Wiper Blade Replacement

Windshield wiper blades should be inspected at least twice a year for wear and cracking. See *Scheduled Maintenance on page 6-4* for more information.

Replacement blades come in different types and are removed in different ways. For proper type and length, see *Normal Maintenance Replacement Parts on page 6-17*.

To replace the windshield wiper blade assembly do the following:

1. Lift the wiper arm and turn the blade until it is facing away from the windshield.

2. Push the release lever and slide the wiper assembly toward the driver's side of the vehicle.
3. Install a new blade by reversing Steps 1 and 2.

Tires

Your new vehicle comes with high-quality tires made by a leading tire manufacturer. If you ever have questions about your tire warranty and where to obtain service, see your GM Warranty booklet for details. For additional information refer to the tire manufacturer's booklet included with your vehicle's Owner's Manual.

⚠ CAUTION:

Poorly maintained and improperly used tires are dangerous.

- **Overloading your tires can cause overheating as a result of too much friction. You could have an air-out and a serious accident. See *Loading Your Vehicle on page 4-50*.**
- **Underinflated tires pose the same danger as overloaded tires. The resulting accident could cause serious injury. Check all tires frequently to maintain the recommended pressure. Tire pressure should be checked when your tires are cold. See *Inflation - Tire Pressure on page 5-79*.**
- **Overinflated tires are more likely to be cut, punctured or broken by a sudden impact —such as when you hit a pothole. Keep tires at the recommended pressure.**
- **Worn, old tires can cause accidents. If your tread is badly worn, or if your tires have been damaged, replace them.**

20-Inch Tires

If your vehicle has the optional 20-inch P275/55R20 size tires, they are classified as touring tires and are designed for on road use. The low-profile, wide tread design is not recommended for “off-road” driving or commercial uses such as snow plowing. See *Off-Road Driving with Your Four-Wheel-Drive Vehicle on page 4-20* and *Adding a Snow Plow or Similar Equipment on page 4-56* for additional information.

Tire Sidewall Labelling

Useful information about a tire is molded into the sidewall. The following illustrations are examples of a typical P-Metric and a LT-Metric tire sidewall.

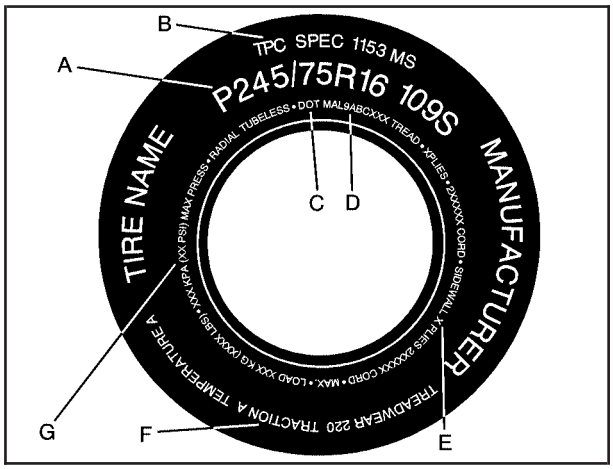

Passenger (P-Metric) Tire

(A) Tire Size: The tire size code is a combination of letters and numbers used to define a particular tire's width, height, aspect ratio, construction type and service description. See the "Tire Size" illustration later in this section for more detail.

(B) TPC Spec (Tire Performance Criteria Specification): Original equipment tires designed to GM's specific tire performance criteria have a TPC specification code molded onto the sidewall. GM's TPC specifications meet or exceed all federal safety guidelines.

(C) DOT (Department of Transportation): The Department of Transportation (DOT) code indicates that the tire is in compliance with the U.S. Department of Transportation Motor Vehicle Safety Standards.

(D) Tire Identification Number (TIN): The letters and numbers following DOT code are the Tire Identification Number (TIN). The TIN shows the manufacturer and plant code, tire size, and date the tire was manufactured. The TIN is molded onto both sides of the tire, although only one side may have the date of manufacture.

(E) Tire Ply Material: The type of cord and number of plies in the sidewall and under the tread.

(F) Uniform Tire Quality Grading (UTQG): Tire manufacturers are required to grade tires based on three performance factors: treadwear, traction and temperature resistance. For more information, see *Uniform Tire Quality Grading on page 5-87*.

(G) Maximum Cold Inflation Load Limit: Maximum load that can be carried and the maximum pressure needed to support that load. For information on recommended tire pressure see *Inflation - Tire Pressure on page 5-79* and *Loading Your Vehicle on page 4-50*.

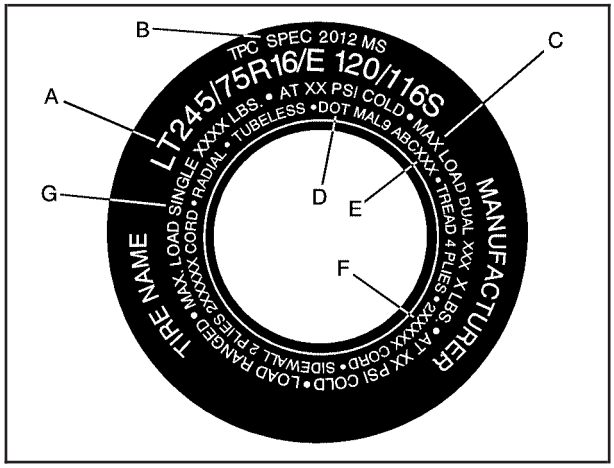

Light Truck (LT-Metric) Tire

(A) Tire Size: The tire size code is a combination of letters and numbers used to define a particular tire's width, height, aspect ratio, construction type and service description. See the "Tire Size" illustration later in this section for more detail.

(B) TPC Spec (Tire Performance Criteria Specification): Original equipment tires designed to GM's specific tire performance criteria have a TPC specification code molded onto the sidewall. GM's TPC specifications meet or exceed all federal safety guidelines.

(C) Dual Tire Maximum Load: Maximum load that can be carried and the maximum pressure needed to support that load when used in a dual configuration. For information on recommended tire pressure see *Inflation - Tire Pressure on page 5-79* and *Loading Your Vehicle on page 4-50*.

(D) DOT (Department of Transportation): The Department of Transportation (DOT) code indicates that the tire is in compliance with the U.S. Department of Transportation Motor Vehicle Safety Standards.

(E) Tire Identification Number (TIN): The letters and numbers following DOT code are the Tire Identification Number (TIN). The TIN shows the manufacturer and plant code, tire size, and date the tire was manufactured. The TIN is molded onto both sides of the tire, although only one side may have the date of manufacture.

(F) Tire Ply Material: The type of cord and number of plies in the sidewall and under the tread.

(G) Single Tire Maximum Load: Maximum load that can be carried and the maximum pressure needed to support that load when used as a single. For information on recommended tire pressure see *Inflation - Tire Pressure on page 5-79* and *Loading Your Vehicle on page 4-50*.

Tire Size

The following examples show the different parts of a tire size.

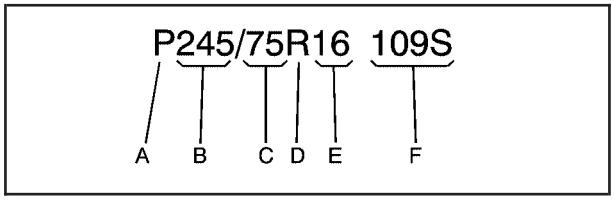

Passenger (P-Metric) Tire

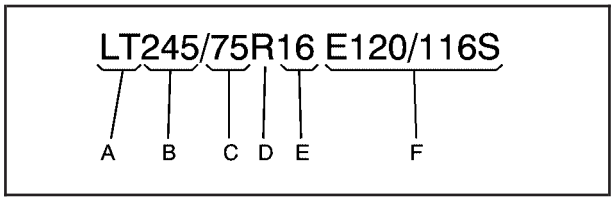

Light Truck (LT-Metric) Tire

(A) Passenger (P-Metric) Tire: The United States version of a metric tire sizing system. The letter P as the first character in the tire size means a passenger vehicle tire engineered to standards set by the U.S. Tire and Rim Association.

(A) Light Truck (LT-Metric) Tire: The United States version of a metric tire sizing system. The letters LT as the first two characters in the tire size means a light truck tire engineered to standards set by the U.S. Tire and Rim Association.

(B) Tire Width: The three-digit number indicates the tire section width in millimeters from sidewall to sidewall.

(C) Aspect Ratio: A two-digit number that indicates the tire height-to-width measurements. For example, if the tire size aspect ratio is 75, as shown in item C of the light truck (LT-Metric) tire illustration, it would mean that the tire's sidewall is 75% as high as it is wide.

(D) Construction Code: A letter code is used to indicate the type of ply construction in the tire. The letter R means radial ply construction; the letter D means diagonal or bias ply construction; and the letter B means belted-bias ply construction.

(E) Rim Diameter: Diameter of the wheel in inches.

(F) Service Description: The service description indicates the load range and speed rating of a tire. The load index can range from 1 to 279. Speed ratings range from A to Z.

Tire Terminology and Definitions

Air Pressure: The amount of air inside the tire pressing outward on each square inch of the tire. Air pressure is expressed in pounds per square inch (psi) or kiloPascal (kPa).

Accessory Weight: This means the combined weight of optional accessories. Some examples of optional accessories are, automatic transmission, power steering, power brakes, power windows, power seats, and air conditioning.

Aspect Ratio: The relationship of a tire's height to its width.

Belt: A rubber coated layer of cords that is located between the plies and the tread. Cords may be made from steel or other reinforcing materials.

Bead: The tire bead contains steel wires wrapped by steel cords that hold the tire onto the rim.

Bias Ply Tire: A pneumatic tire in which the plies are laid at alternate angles less than 90 degrees to the centerline of the tread.

Cold Inflation Pressure: The amount of air pressure in a tire, measured in pounds per square inch (psi) or kilopascals (kPa) before a tire has built up heat from driving. See *Inflation - Tire Pressure on page 5-79*.

Curb Weight: This means the weight of a motor vehicle with standard and optional equipment including the maximum capacity of fuel, oil and coolant, but without passengers and cargo.

DOT Markings: A code molded into the sidewall of a tire signifying that the tire is in compliance with the U.S. Department of Transportation (DOT) motor vehicle safety standards. The DOT code includes the Tire Identification Number (TIN), an alphanumeric designator which can also identify the tire manufacturer, production plant, brand and date of production.

GVWR: Gross Vehicle Weight Rating, see *Loading Your Vehicle on page 4-50*.

GAWR FRT: Gross Axle Weight Rating for the front axle, see *Loading Your Vehicle on page 4-50*.

GAWR RR: Gross Axle Weight Rating for the rear axle, see *Loading Your Vehicle on page 4-50*.

Intended Outboard Sidewall: The side of an asymmetrical tire, that must always face outward when mounted on a vehicle.

KiloPascal (kPa): The metric unit for air pressure.

Light Truck (LT-Metric) Tire: A tire used on light duty trucks and some multipurpose passenger vehicles.

Load Index: An assigned number ranging from 1 to 279 that corresponds to the load carrying capacity of a tire.

Maximum Inflation Pressure: The maximum air pressure to which a cold tire may be inflated. The maximum air pressure is molded onto the sidewall.

Maximum Load Rating: The load rating for a tire at the maximum permissible inflation pressure for that tire.

Maximum Loaded Vehicle Weight: The sum of curb weight; accessory weight; vehicle capacity weight; and production options weight.

Normal Occupant Weight: The number of occupants a vehicle is designed to seat multiplied by 150 lbs (68 kg). See *Loading Your Vehicle on page 4-50*.

Occupant Distribution: Designated seating positions.

Outward Facing Sidewall: The side of an asymmetrical tire that has a particular side that faces outward when mounted on a vehicle. The side of the tire that contains a whitewall, bears white lettering or bears manufacturer, brand, and/or model name molding that is higher or deeper than the same moldings on the other sidewall of the tire.

Passenger (P-Metric) Tire: A tire used on passenger cars and some light duty trucks and multipurpose vehicles.

Recommended Inflation Pressure: Vehicle manufacturer's recommended tire inflation pressure and shown on the tire placard. See *Inflation - Tire Pressure on page 5-79* and *Loading Your Vehicle on page 4-50*.

Radial Ply Tire: A pneumatic tire in which the ply cords that extend to the beads are laid at 90 degrees to the centerline of the tread.

Rim: A metal support for a tire and upon which the tire beads are seated.

Sidewall: The portion of a tire between the tread and the bead.

Speed Rating: An alphanumeric code assigned to a tire indicating the maximum speed at which a tire can operate.

Traction: The friction between the tire and the road surface. The amount of grip provided.

Tread: The portion of a tire that comes into contact with the road.

Treadwear Indicators: Narrow bands, sometimes called "wear bars," that show across the tread of a tire when only 1/16 inch (1.6 mm) of tread remains. See *When It Is Time for New Tires on page 5-85*.

UTQGS (Uniform Tire Quality Grading Standards): A tire information system that provides consumers with ratings for a tire's traction, temperature, and treadwear. Ratings are determined by tire manufacturers using government testing procedures. The ratings are molded into the sidewall of the tire. See *Uniform Tire Quality Grading on page 5-87*.

Vehicle Capacity Weight: The number of designated seating positions multiplied by 150 lbs (68 kg) plus the rated cargo load. See *Loading Your Vehicle on page 4-50*.

Vehicle Maximum Load on the Tire: Load on an individual tire due to curb weight, accessory weight, occupant weight, and cargo weight.

Vehicle Placard: A label permanently attached to a vehicle showing the vehicle's capacity weight and the original equipment tire size and recommended inflation pressure. See "Tire and Loading Information Label" under *Loading Your Vehicle on page 4-50*.

Inflation - Tire Pressure

Tires need the correct amount of air pressure to operate effectively.

Notice: **Do not let anyone tell you that under-inflation or over-inflation is all right. It is not. If your tires do not have enough air (under-inflation), you can get the following:**

- **Too much flexing**
- **Too much heat**
- **Tire overloading**
- **Premature or irregular wear**
- **Poor handling**
- **Reduced fuel economy**

If your tires have too much air (over-inflation), you can get the following:

- **Unusual wear**
- **Poor handling**
- **Rough ride**
- **Needless damage from road hazards**

A Tire and Loading Information label is attached to the vehicle's center pillar (B-pillar), below the driver's door lock post (striker). This label lists your vehicle's original equipment tires and their recommended cold tire inflation pressures. The recommended cold tire inflation pressure, shown on the label, is the minimum amount of air pressure needed to support your vehicle's maximum load carrying capacity.

For additional information regarding how much weight your vehicle can carry, and an example of the tire and loading information label, see *Loading Your Vehicle on page 4-50*.

When to Check

Check your tires once a month or more. Do not forget to check the spare tire. For additional information regarding the spare tire, see *Spare Tire on page 5-112*.

How to Check

Use a good quality pocket-type gage to check tire pressure. You cannot tell if your tires are properly inflated simply by looking at them. Radial tires may look properly inflated even when they're underinflated. Check the tire's inflation pressure when the tires are cold. Cold means your vehicle has been sitting for at least three hours or driven no more than 1 mile (1.6 km).

Remove the valve cap from the tire valve stem. Press the tire gage firmly onto the valve to get a pressure measurement. If the cold tire inflation pressure matches the recommended pressure on the Tire and Loading Information label, no further adjustment is necessary. If the inflation pressure is low, add air until you reach the recommended amount.

If you overfill the tire, release air by pushing on the metal stem in the center of the tire valve. Recheck the tire pressure with the tire gage.

Be sure to put the valve caps back on the valve stems. They help prevent leaks by keeping out dirt and moisture.

Improved Ride with Light Load

⚠ CAUTION:

Do not overload your vehicle or underinflate the tires. Overloading your vehicle or underinflating the tires can cause rapid loss of pressure and cause a serious crash. Only use reduced rear tire pressure when your vehicle meets the criteria for a light load.

If you have a 1500 or 2500 Series truck with LT245/75R16E size tires and you are operating your vehicle under light-load conditions, you can improve ride quality by adjusting both the front and rear cold tires to the recommended pressure shown on the Improved Ride label.

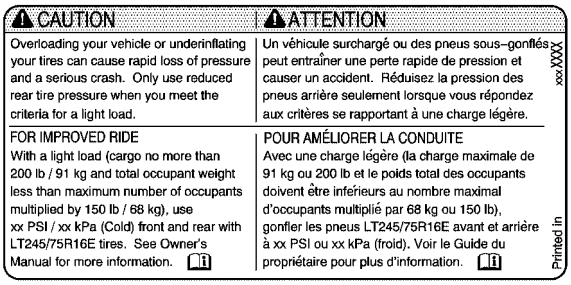
CAUTION

Overloading your vehicle or underinflating your tires can cause rapid loss of pressure and a serious crash. Only use reduced rear tire pressure when you meet the criteria for a light load.

ATTENTION

Un véhicule surchargé ou des pneus sous–gonflés peut entraîner une perte rapide de pression et causer un accident. Réduisez la pression des pneus arrière seulement lorsque vous répondez aux critères se rapportant à une charge légère.

xxx XXXX

FOR IMPROVED RIDE

With a light load (cargo no more than 200 lb / 91 kg and total occupant weight less than maximum number of occupants multiplied by 150 lb / 68 kg), use xx PSI / xx kPa (Cold) front and rear with LT245/75R16E tires. See Owner's Manual for more information.

POUR AMÉLIORER LA CONDUITE

Avec une charge légère (la charge maximale de 91 kg ou 200 lb et le poids total des occupants doivent être inférieurs au nombre maximal d'occupants multiplié par 68 kg ou 150 lb), gonfler les pneus LT245/75R16E avant et arrière à xx PSI ou xx kPa (froid). Voir le Guide du propriétaire pour plus d'information.

Printed in

An example of the Improved Ride label is shown here. This label is attached to the lower section of the driver's door edge, for 1500 and 2500 Series trucks equipped with LT245/75R16E size tires.

Operating your vehicle with a light load means:

- The total weight of occupants in your vehicle is less than the total seating capacity number your vehicle was designed to carry multiplied by 150 lbs (68 kg). The total seating capacity number is on the Tire and Loading Information label.
- No more than 200 lbs (91 kg) of cargo, which must be secured in the cargo area.
- No trailer is attached to your vehicle.
- You have not added any additional equipment to your vehicle, like a truck cap or tool box.

The vehicle load capacity and the rear axle load capacity are reduced when the tire pressure is lowered to the amount recommended for improved ride. Before operating your vehicle with passengers or cargo greater than a light-load, you must inflate the rear tires to the recommended cold tire pressure shown on the Tire and Loading Information Label. See *Loading Your Vehicle on page 4-50*.

Dual Tire Operation

When the vehicle is new, or whenever a wheel, wheel bolt or wheel nut is replaced, check the wheel nut torque after 100, 1,000 and 6,000 miles (160, 1 600 and 10 000 km) of driving. For proper torque and wheel nut tightening information, see *Removing the Spare Tire and Tools on page 5-93*.

The outer tire on a dual wheel setup generally wears faster than the inner tire. Your tires will wear more evenly and last longer if you rotate the tires periodically, see *Tire Inspection and Rotation on page 5-83*. Also see *Scheduled Maintenance on page 6-4*.

⚠ CAUTION:

If you operate your vehicle with a tire that is badly underinflated, the tire can overheat. An overheated tire can lose air suddenly or catch fire. You or others could be injured. Be sure all tires (including the spare) are properly inflated.

See *Inflation - Tire Pressure on page 5-79*, for information on proper tire inflation.

Tire Inspection and Rotation

Tires should be rotated every 5,000 to 8,000 miles (8 000 to 13 000 km).

Any time you notice unusual wear, rotate your tires as soon as possible and check wheel alignment. Also check for damaged tires or wheels. See *When It Is Time for New Tires on page 5-85* and *Wheel Replacement on page 5-88* for more information.

Make sure the spare tire is stored securely. Push, pull, and then try to rotate or turn the tire. If it moves, use the wheel wrench/hoist shaft to tighten the cable. See *Changing a Flat Tire on page 5-92*.

If your vehicle has dual rear wheels, also see *Dual Tire Operation on page 5-82*.

The purpose of regular rotation is to achieve more uniform wear for all tires on the vehicle. The first rotation is the most important. See *Scheduled Maintenance on page 6-4*.

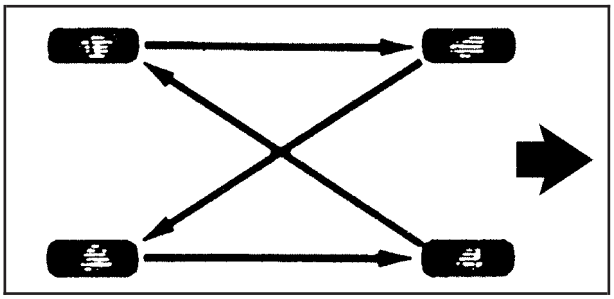

If your vehicle has single rear wheels and the tread design for your front tires is the same as your rear tires, use the rotation pattern shown here when rotating your tires. If your vehicle is an SS model, the spare tire is not designed to be used in the tire rotation.

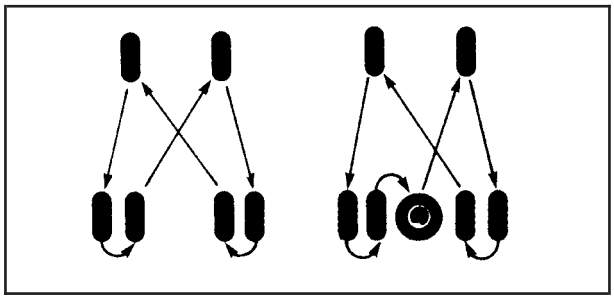

If your vehicle has dual rear wheels and the tread design for your front tires is the same as your rear tires, always use one of the correct rotation patterns shown here when rotating your tires.

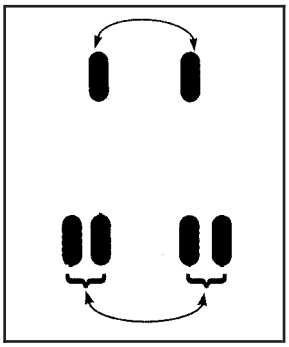

If your vehicle has dual rear wheels and the tread design for the front tires is different from the dual rear tires, always use the correct rotation pattern shown here when rotating your tires. The dual tires are rotated as a pair, and the inside rear tires become the outside rear tires.

When you install dual wheels, be sure the vent holes in the inner and outer wheels on each side are lined up.

After the tires have been rotated, adjust the front and rear inflation pressures as shown on the Tire and Loading Information label. See *Loading Your Vehicle on page 4-50*. Make certain that all wheel nuts are properly tightened. See “Wheel Nut Torque” under *Capacities and Specifications on page 5-130*.

⚠ CAUTION:

Rust or dirt on a wheel, or on the parts to which it is fastened, can make wheel nuts become loose after a time. The wheel could come off and cause an accident. When you change a wheel, remove any rust or dirt from places where the wheel attaches to the vehicle. In an emergency, you can use a cloth or a paper towel to do this; but be sure to use a scraper or wire brush later, if needed, to get all the rust or dirt off. See *Changing a Flat Tire on page 5-92*.

When It Is Time for New Tires

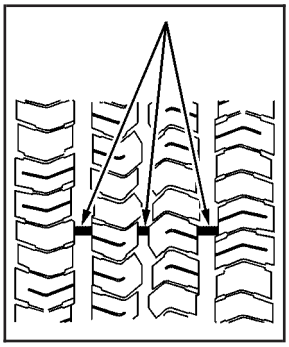

One way to tell when it's time for new tires is to check the treadwear indicators, which will appear when your tires have only 1/16 inch (1.6 mm) or less of tread remaining. Some commercial truck tires may not have treadwear indicators.

You need a new tire if any of the following statements are true:

- You can see the indicators at three or more places around the tire.
- You can see cord or fabric showing through the tire's rubber.
- The tread or sidewall is cracked, cut or snagged deep enough to show cord or fabric.
- The tire has a bump, bulge or split.
- The tire has a puncture, cut or other damage that can't be repaired well because of the size or location of the damage.

Buying New Tires

To find out what kind and size of tires you need, look at the Certification/Tire label. See *Loading Your Vehicle on page 4-50*, for more information about this Certification/Tire label and where it can be found on your vehicle.

The tires installed on your vehicle when it was new had a Tire Performance Criteria Specifications (TPC Spec) number on each tire's sidewall. When you get new tires, GM recommends that you get tires with that same TPC Spec number. That way your vehicle will continue to have tires that are designed to give proper endurance, handling, speed rating, load range, traction, ride, and other things during normal service on your vehicle. If your tires have an all-season tread design, the TPC number will be followed by an "MS" (for mud and snow).

Whenever you replace your tires with those not having a TPC Spec number, make sure they are the same size, load range, speed rating and construction type (bias, bias-belted or radial) as your original tires.

⚠ CAUTION:

Mixing tires could cause you to lose control while driving. If you mix tires of different sizes or types (radial and bias-belted tires), the vehicle may not handle properly, and you could have a crash. Using tires of different sizes may also cause damage to your vehicle. Be sure to use the same size and type tires on all wheels.

Your vehicle may be equipped with a different size spare than the road tires (those originally installed on your vehicle). When new, your vehicle included a spare tire and wheel assembly with a similar overall diameter as your vehicle's road tires and wheels, so it is all right to drive on it. Because this spare was developed for use on your vehicle, it will not affect vehicle handling.

⚠ CAUTION:

If you use bias-ply tires on your vehicle, the wheel rim flanges could develop cracks after many miles of driving. A tire and/or wheel could fail suddenly, causing a crash. Use only radial-ply tires with the wheels on your vehicle.

Uniform Tire Quality Grading

Quality grades can be found where applicable on the tire sidewall between tread shoulder and maximum section width. For example:

Treadwear 200 Traction AA Temperature A

The following information relates to the system developed by the United States National Highway Traffic Safety Administration, which grades tires by treadwear, traction and temperature performance. (This applies only to vehicles sold in the United States.)

The grades are molded on the sidewalls of most passenger car tires. The Uniform Tire Quality Grading system does not apply to deep tread, winter-type snow tires, space-saver or temporary use spare tires, tires with nominal rim diameters of 10 to 12 inches (25 to 30 cm), or to some limited-production tires.

While the tires available on General Motors passenger cars and light trucks may vary with respect to these grades, they must also conform to federal safety requirements and additional General Motors Tire Performance Criteria (TPC) standards.

Treadwear

The treadwear grade is a comparative rating based on the wear rate of the tire when tested under controlled conditions on a specified government test course. For example, a tire graded 150 would wear one and a half (1.5) times as well on the government course as a tire graded 100. The relative performance of tires depends upon the actual conditions of their use, however, and may depart significantly from the norm due to variations in driving habits, service practices and differences in road characteristics and climate.

Traction – AA, A, B, C

The traction grades, from highest to lowest, are AA, A, B, and C. Those grades represent the tire's ability to stop on wet pavement as measured under controlled conditions on specified government test surfaces of asphalt and concrete. A tire marked C may have poor traction performance. Warning: The traction grade assigned to this tire is based on straight-ahead braking traction tests, and does not include acceleration, cornering, hydroplaning, or peak traction characteristics.

Temperature – A, B, C

The temperature grades are A (the highest), B, and C, representing the tire's resistance to the generation of heat and its ability to dissipate heat when tested under controlled conditions on a specified indoor laboratory test wheel. Sustained high temperature can cause the material of the tire to degenerate and reduce tire life, and excessive temperature can lead to sudden tire failure. The grade C corresponds to a level of performance which all passenger car tires must meet under the Federal Motor Vehicle Safety Standard No. 109. Grades B and A represent higher levels of performance on the laboratory test wheel than the minimum required by law.

Warning: The temperature grade for this tire is established for a tire that is properly inflated and not overloaded. Excessive speed, underinflation, or excessive loading, either separately or in combination, can cause heat buildup and possible tire failure.

Wheel Alignment and Tire Balance

The wheels on your vehicle were aligned and balanced carefully at the factory to give you the longest tire life and best overall performance.

If you notice unusual tire wear or your vehicle pulling one way or the other, the alignment may need to be reset. If you notice your vehicle vibrating when driving on a smooth road, your wheels may need to be rebalanced.

Wheel Replacement

Replace any wheel that is bent, cracked, or badly rusted or corroded. If wheel nuts keep coming loose, the wheel, wheel bolts and wheel nuts should be replaced. If the wheel leaks air, replace it (except some aluminum wheels, which can sometimes be repaired). See your dealer if any of these conditions exist.

Your dealer will know the kind of wheel you need.

Each new wheel should have the same load-carrying capacity, diameter, width, offset and be mounted the same way as the one it replaces.

If you need to replace any of your wheels, wheel bolts or wheel nuts, replace them only with new GM original equipment parts. This way, you will be sure to have the right wheel, wheel bolts and wheel nuts for your vehicle.

⚠ CAUTION:

Using the wrong replacement wheels, wheel bolts or wheel nuts on your vehicle can be dangerous. It could affect the braking and handling of your vehicle, make your tires lose air and make you lose control. You could have a collision in which you or others could be injured. Always use the correct wheel, wheel bolts and wheel nuts for replacement.

Notice: **The wrong wheel can also cause problems with bearing life, brake cooling, speedometer or odometer calibration, headlamp aim, bumper height, vehicle ground clearance and tire or tire chain clearance to the body and chassis.**

Whenever a wheel, wheel bolt or wheel nut is replaced on a dual wheel setup, check the wheel nut torque after 100, 1,000 and 6,000 miles (160, 1 600 and 10 000 km) of driving. For proper torque, see “Wheel Nut Torque” under *Capacities and Specifications on page 5-130*.

See *Changing a Flat Tire on page 5-92* for more information.

Used Replacement Wheels

⚠ CAUTION:

Putting a used wheel on your vehicle is dangerous. You can’t know how it’s been used or how far it’s been driven. It could fail suddenly and cause a crash. If you have to replace a wheel, use a new GM original equipment wheel.

Tire Chains

⚠ CAUTION:

If your vehicle has dual wheels or P265/75R16, LT265/75R16, P265/70R17 or P275/55R20 size tires, don't use tire chains. They can damage your vehicle because there's not enough clearance. Tire chains used on a vehicle without the proper amount of clearance can cause damage to the brakes, suspension or other vehicle parts. The area damaged by the tire chains could cause you to lose control of your vehicle and you or others may be injured in a crash.

Use another type of traction device only if its manufacturer recommends it for use on your vehicle and tire size combination and road conditions. Follow that manufacturer's

CAUTION: (Continued)

CAUTION: (Continued)

instructions. To help avoid damage to your vehicle, drive slowly, readjust or remove the device if it's contacting your vehicle, and don't spin your wheels.

If you do find traction devices that will fit, install them on the rear tires.″

Notice: **If your vehicle does not have dual wheels and is equipped with a tire size other than P265/75R16, LT265/75R16, P265/70R17 or P275/55R20, use tire chains only where legal and only when you must. Use chains that are the proper size for your tires. Install them on the tires of the rear axle. Don't use chains on the tires of the front axle. Tighten them as tightly as possible with the ends securely fastened. Drive slowly and follow the chain manufacturer's instructions. If you can hear the chains contacting your vehicle, stop and retighten them. If the contact continues, slow down until it stops. Driving too fast or spinning the wheels with chains on will damage your vehicle.**

If a Tire Goes Flat

It's unusual for a tire to "blowout" while you're driving, especially if you maintain your tires properly. If air goes out of a tire, it's much more likely to leak out slowly. But if you should ever have a "blowout," here are a few tips about what to expect and what to do:

If a front tire fails, the flat tire will create a drag that pulls the vehicle toward that side. Take your foot off the accelerator pedal and grip the steering wheel firmly. Steer to maintain lane position, and then gently brake to a stop well out of the traffic lane.

A rear blowout, particularly on a curve, acts much like a skid and may require the same correction you'd use in a skid. In any rear blowout, remove your foot from the accelerator pedal. Get the vehicle under control by steering the way you want the vehicle to go. It may be very bumpy and noisy, but you can still steer. Gently brake to a stop, well off the road if possible.

⚠ CAUTION:

Lifting a vehicle and getting under it to do maintenance or repairs is dangerous without the appropriate safety equipment and training. The jack provided with your vehicle is designed only for changing a flat tire. If it is used for anything else, you or others could be badly injured or killed if the vehicle slips off the jack. Use the jack provided with your vehicle only for changing a flat tire.

If a tire goes flat, the next part shows how to use your jacking equipment to change a flat tire safely.

Changing a Flat Tire

If a tire goes flat, avoid further tire and wheel damage by driving slowly to a level place. Turn on your hazard warning flashers.

⚠ CAUTION:

Changing a tire can be dangerous. The vehicle can slip off the jack and roll over or fall on you or other people. You and they could be badly injured or even killed. Find a level place to change your tire. To help prevent the vehicle from moving:

1. **Set the parking brake firmly.**
2. **Put an automatic transmission shift lever in PARK (P), or shift a manual transmission to FIRST (1) or REVERSE (R).**
3. **If you have a four-wheel-drive vehicle, be sure the transfer case is in a drive gear—not in NEUTRAL.**

CAUTION: (Continued)

CAUTION: (Continued)

4. **Turn off the engine and do not restart while the vehicle is raised.**
5. **Do not allow passengers to remain in the vehicle.**

To be even more certain the vehicle won't move, you can put blocks at the front and rear of the tire farthest away from the one being changed. That would be the tire on the other side, at the opposite end of the vehicle.

When you have a flat tire, use the following as a guide to assist you in the placement of the wheel blocks.

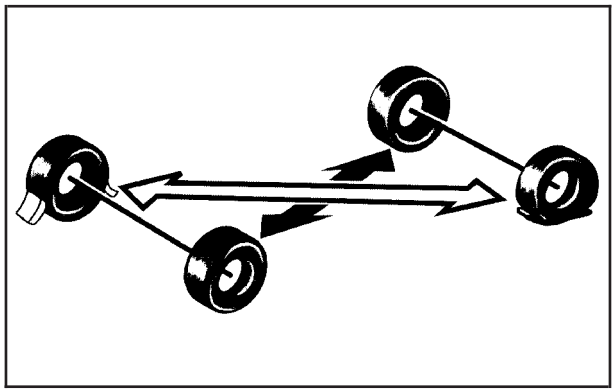

The following information will tell you next how to use the jack and change a tire.

Removing the Spare Tire and Tools

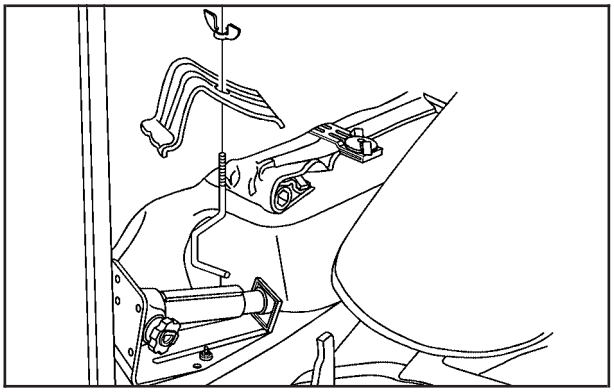

Regular Cab and Crew Cab (Except 1500 Crew Cab)

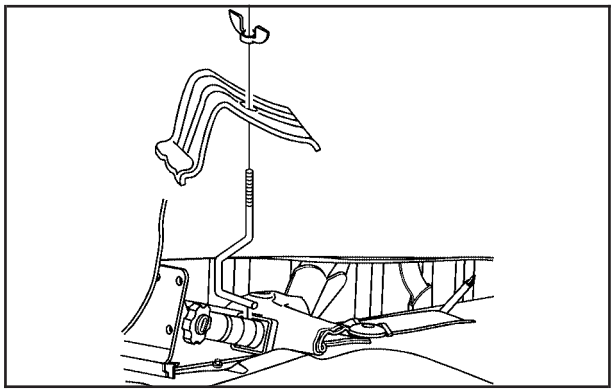

Extended Cab

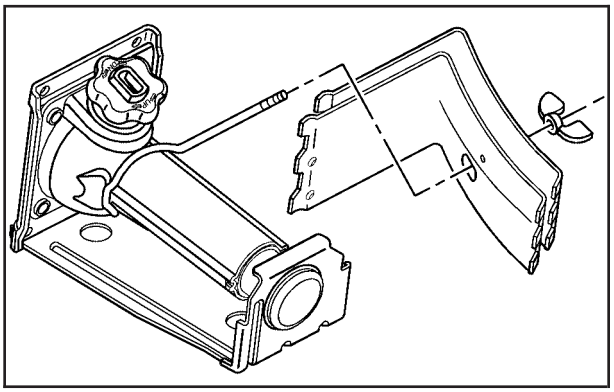

1500 Crew Cab

For regular cab models, the equipment you'll need is behind the passenger's seat. For extended and crew cab models, the equipment is on the shelf behind the passenger's side second row seat.

1. If there is a cover, move the seats forward and turn the wing nut on the cover counterclockwise to remove it. For crew cab models, pull up the second row seat with the loop at the base of the seat cushion to access the tools.
2. Turn the knob on the bottle jack counterclockwise to lower the jack head to release the bottle jack from its holder.

3. Remove the wheel blocks and the wheel block retainer by turning the wing nut counterclockwise.
4. Remove the wing nut used to retain the storage bag and tools by turning it counterclockwise.

You'll use the jack handle extensions and the wheel wrench to remove the underbody-mounted spare tire.

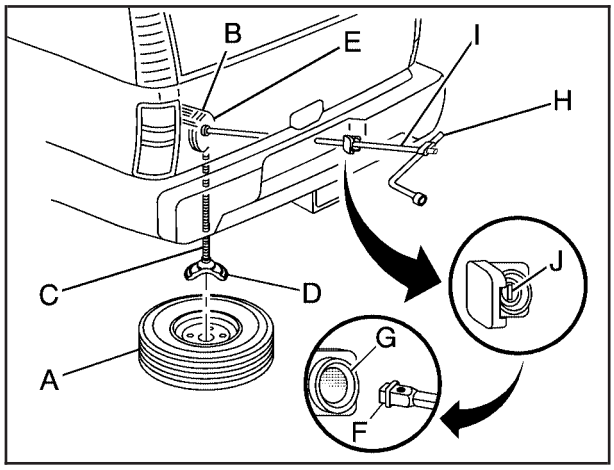

A. Spare Tire (Valve Stem Pointed Down)
B. Hoist Assembly
C. Hoist Cable
D. Tire Retainer
E. Hoist Shaft
F. Hoist End of Extension Tool
G. Hoist Shaft Access Hole
H. Wheel Wrench
I. Jack Handle Extensions
J. Hoist Lock (If Equipped)

1. Open the spare tire lock cover on the bumper and use the ignition key to remove the lock (if your vehicle is equipped with a hoist lock (J)).

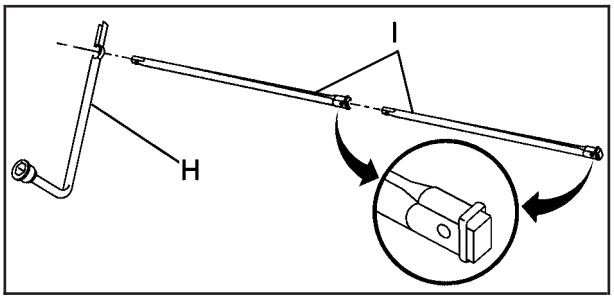

2. Assemble the wheel wrench (H) and the two jack handle extensions (I) as shown.

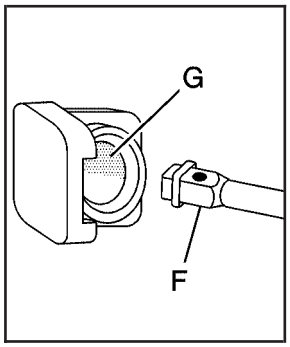

3. Insert the hoist end (open end) (F) of the extension through the hole (G) in the rear bumper.

Be sure the hoist end of the extension connects to the hoist shaft (E). The ribbed square end of the extension is used to lower the spare tire.

4. Turn the wheel wrench (H) counterclockwise to lower the spare tire to the ground. Continue to turn the wheel wrench until the spare tire can be pulled out from under the vehicle.

   If the spare tire does not lower to the ground, the secondary latch is engaged causing the tire not to lower. See *Secondary Latch System on page 5-105*.

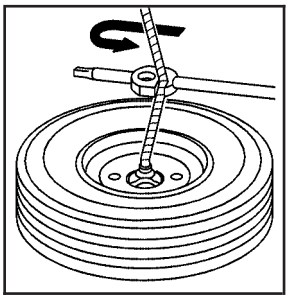

5. Use the wheel wrench hook which allows you to pull the hoist cable towards you to assist in reaching the spare tire.

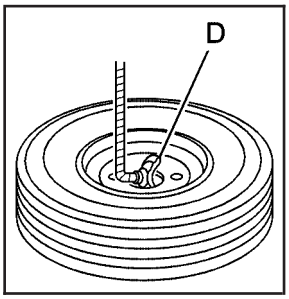

6. Tilt the retainer (D) at the end of the cable when the tire has been lowered, so it can be pulled up through the wheel opening.

7. Put the spare tire near the flat tire.

Removing the Flat Tire and Installing the Spare Tire

Use the following pictures and instructions to remove the flat tire and raise the vehicle.

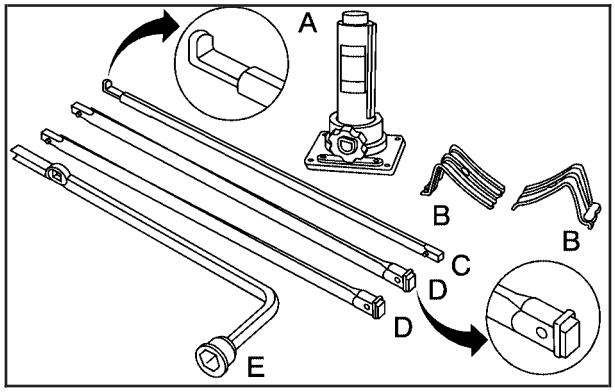

The tools you'll be using include the bottle jack (A), the wheel blocks (B), the jack handle (C), the jack handle extensions (D), and the wheel wrench (E).

1. If your vehicle has wheel nut caps, loosen them by turning the wheel wrench counterclockwise.

   If the vehicle has a center cap with wheel nut caps, the wheel nut caps are designed to stay with the center cap after they are loosened. Remove the entire center cap.

If the wheel has a smooth center cap, place the chisel end of the wheel wrench in the slot on the wheel, and gently pry out.

If the wheel has bolt-on wheel covers, loosen the plastic nut caps by turning the wheel wrench in a counterclockwise direction. If needed, finish loosening them by hand. The nut caps will not come off. Using the flat end of the wheel wrench, pry along the edge of the cover until it comes off.

2. Use and turn the wheel wrench counterclockwise to loosen the wheel nuts. Don't remove the wheel nuts yet.

Notice: **If your vehicle has QUADRASTEER™ and you use a jack to raise the vehicle without positioning it correctly, you could damage the QUADRASTEER™ system. When raising your vehicle on a jack, avoid contact with tie rods and tie rod boots.**

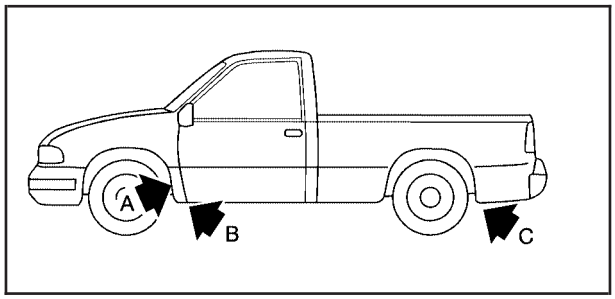

Jacking Locations

A. Front Location (Two-Wheel-Drive 1500 Series)
B. Front Location (All Other Series)
C. Rear Location (All Series)

3. Position the jack under the vehicle as shown. If the flat tire is on the front of the vehicle (two-wheel-drive 1500 Series vehicles), position the jack under the bracket attached to the vehicle's frame, behind the flat tire. If the flat tire is on the front of the vehicle (all other models), position the jack on the frame behind the flat tire.

   If the flat tire is on the rear, position the jack under the rear axle between the spring anchor and the shock absorber bracket.

   If you have added a snow plow to the front of your vehicle, lower the snow plow fully before raising the vehicle.

⚠ CAUTION:

Getting under a vehicle when it is jacked up is dangerous. If the vehicle slips off the jack you could be badly injured or killed. Never get under a vehicle when it is supported only by a jack.

⚠ CAUTION:

Raising your vehicle with the jack improperly positioned can damage the vehicle and even make the vehicle fall. To help avoid personal injury and vehicle damage, be sure to fit the jack lift head into the proper location before raising the vehicle.

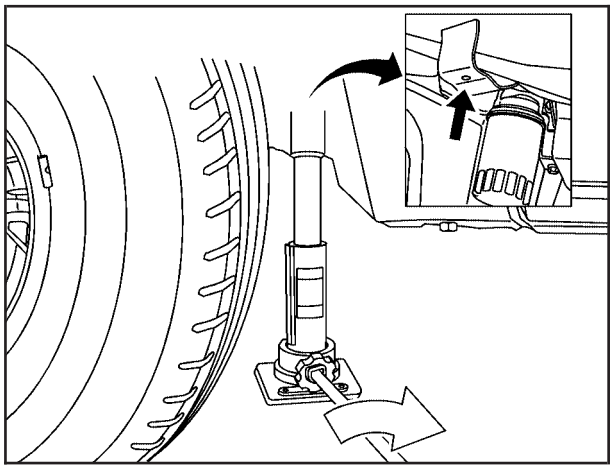

Front Position — 2WD 1500 Series

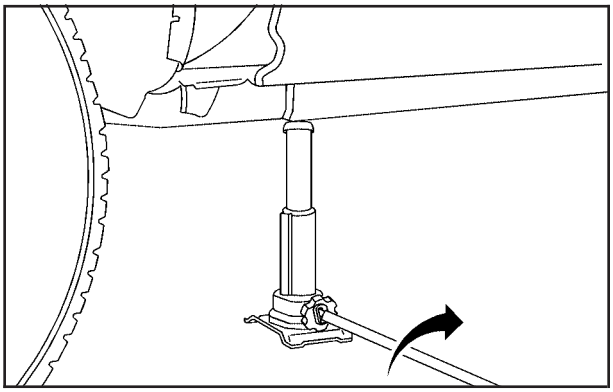

Front Position — All Other Models

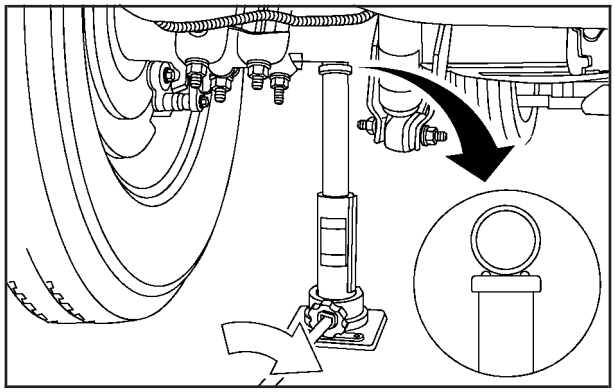

Rear Position

4. Make sure the jack head is positioned so that the rear axle is resting securely between the grooves that are on the jack head. Turn the wheel wrench clockwise to raise the vehicle. Raise the vehicle far enough off the ground so there is enough room for the spare tire to fit under the wheel well.

5. Remove all the wheel nuts and take off the flat tire.

⚠ CAUTION:

Rust or dirt on the wheel, or on the parts to which it is fastened, can make the wheel nuts become loose after a time. The wheel could come off and cause an accident. When you change a wheel, remove any rust or dirt from the places where the wheel attaches to the vehicle. In an emergency, you can use a cloth or a paper towel to do this; but be sure to use a scraper or wire brush later, if you need to, to get all the rust or dirt off.

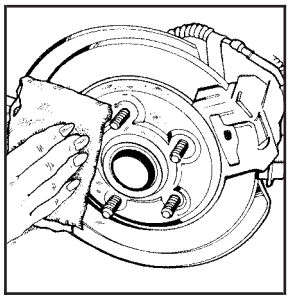

6. Remove any rust or dirt from the wheel bolts, mounting surfaces and spare wheel.

⚠ CAUTION:

Never use oil or grease on studs or nuts. If you do, the nuts might come loose. Your wheel could fall off, causing a serious accident.

7. After mounting the spare, put the wheel nuts back on with the rounded end of the nuts toward the wheel.

8. Tighten each wheel nut by hand. Then use the wheel wrench to tighten the nuts until the wheel is held against the hub.

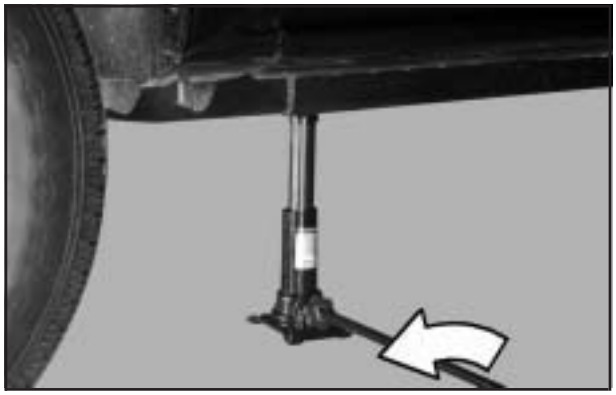

Front Position — All Models

Front Position — 2WD 1500 Series

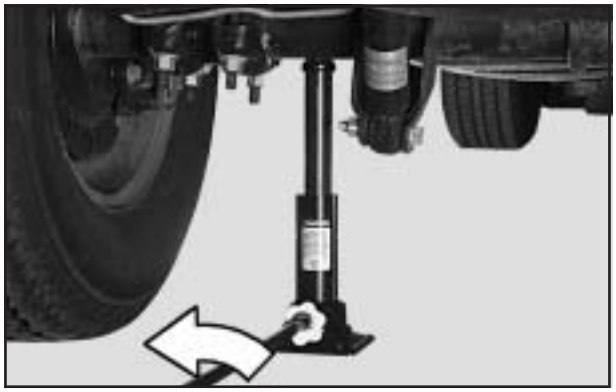

Rear Position

9. Turn the wheel wrench counterclockwise to lower the vehicle. Lower the jack completely.

⚠ CAUTION:

Incorrect wheel nuts or improperly tightened wheel nuts can cause the wheel to come loose and even come off. This could lead to an accident. Be sure to use the correct wheel nuts. If you have to replace them, be sure to get new GM original equipment wheel nuts. Stop somewhere as soon as you can and have the nuts tightened with a torque wrench to the proper torque specification. See *Capacities and Specifications on page 5-130* for wheel nut torque specification.

Notice: **Improperly tightened wheel nuts can lead to brake pulsation and rotor damage. To avoid expensive brake repairs, evenly tighten the wheel nuts in the proper sequence and to the proper torque specification. See *Capacities and Specifications on page 5-130* for the wheel nut torque specification.**

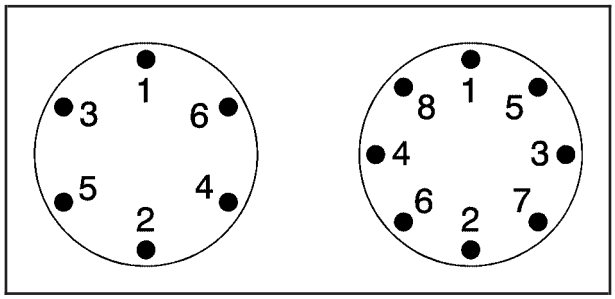

10. Tighten the nuts firmly in a crisscross sequence as shown by turning the wheel wrench clockwise.

When you reinstall the regular wheel and tire, you must also reinstall either the center cap, or bolt-on hub cap, depending on what your vehicle is equipped with. For center caps, place the cap on the wheel and tap it into place until it seats flush with the wheel. The cap only goes on one way. Be sure to line up the tab on the center cap with the indentation on the wheel. For bolt-on hub caps, align the plastic nut caps with the wheel nuts and then tighten by hand. Then use the wheel wrench to tighten.

Secondary Latch System

Your vehicle has an underbody-mounted tire hoist assembly equipped with a secondary latch system. It is designed to stop the spare tire from suddenly falling off your vehicle. For the secondary latch to work, the spare must be installed with the valve stem pointing down. See *Storing a Flat or Spare Tire and Tools on page 5-109*.

⚠ CAUTION:

Before beginning this procedure read all the instructions. Failure to read and follow the instructions could damage the hoist assembly and you and others could get hurt. Read and follow the instructions listed below.

To release the spare tire from the secondary latch, do the following:

1. Check under the vehicle to see if the cable end is visible.

   If the cable is not visible proceed to Step 6.

2. If it is visible, first try to tighten the cable by turning the wheel wrench clockwise until you hear two clicks or feel it skip twice. You cannot overtighten the cable.

3. Loosen the cable by turning the wrench counterclockwise three or four turns.

4. Repeat this procedure at least two times. If the spare tire lowers to the ground, continue with Step 5 of *Removing the Spare Tire and Tools on page 5-93*.

5. Turn the wrench counterclockwise until approximately 6 inches (15 cm) of cable is exposed.

6. Stand the wheel blocks on their shortest ends, with the backs facing each other.

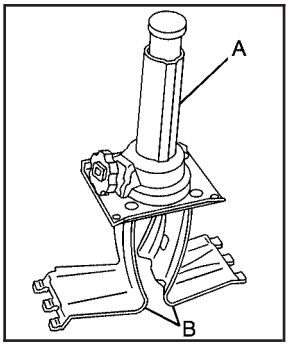

7. Place the bottom edge of the jack (A) on the wheel blocks (B), separating them so that the jack is balanced securely.

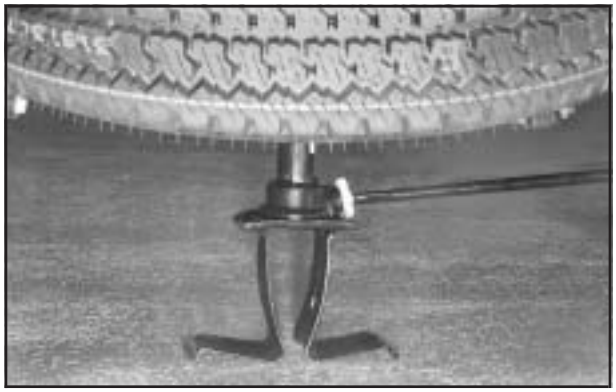

8. Attach the jack handle, extension, and wheel wrench to the jack and place it (with the wheel blocks) under the vehicle towards the front of the rear bumper.

9. Position the center lift point of the jack under the center of the spare tire.
10. Turn the wrench clockwise to raise the jack until it lifts the end fitting.
11. Continue raising the jack until the spare tire stops moving upward and is held firmly in place. The secondary latch has released and the spare tire is balancing on the jack.
12. Lower the jack by turning the wheel wrench counterclockwise. Keep lowering the jack until the spare tire slides off the jack or is hanging by the cable.

⚠ CAUTION:

Someone standing too close during the procedure could be injured by the jack. If the spare tire does not slide off the jack completely, make sure no one is behind you or on either side of you as you pull the jack out from the spare.

13. Disconnect the jack handle from the jack and carefully remove the jack. Use one hand to push against the spare while firmly pulling the jack out from under the spare tire with the other hand.

    If the spare tire is hanging from the cable, insert the hoist handle, extension and wheel wrench into the hoist shaft hole in the bumper and turn the wheel wrench counterclockwise to lower the spare the rest of the way.

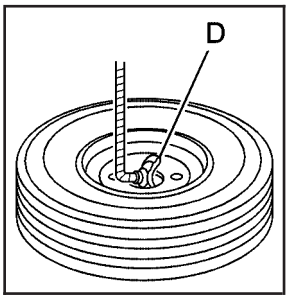

14. Tilt the retainer (D) at the end of the cable and pull it through the wheel opening. Pull the tire out from under the vehicle.

15. Turn the wheel wrench clockwise to raise the cable back up if the cable is hanging under the vehicle.

Have the hoist assembly inspected as soon as you can. You will not be able to store a spare or flat tire using the hoist assembly until it has been replaced.

To continue changing the flat tire, see *Removing the Flat Tire and Installing the Spare Tire on page 5-97*.

Storing a Flat or Spare Tire and Tools

⚠ CAUTION:

Storing a jack, a tire, or other equipment in the passenger compartment of the vehicle could cause injury. In a sudden stop or collision, loose equipment could strike someone. Store all these in the proper place.

Notice: **Storing an aluminum wheel with a flat tire under your vehicle for an extended period of time or with the valve stem pointing up may damage the wheel. Always stow the wheel with the valve stem pointing down and have the wheel/tire repaired as soon as possible.**

Return the bottle jack, wheel blocks, wheel wrench and jack extensions to their location behind the passenger's seat.

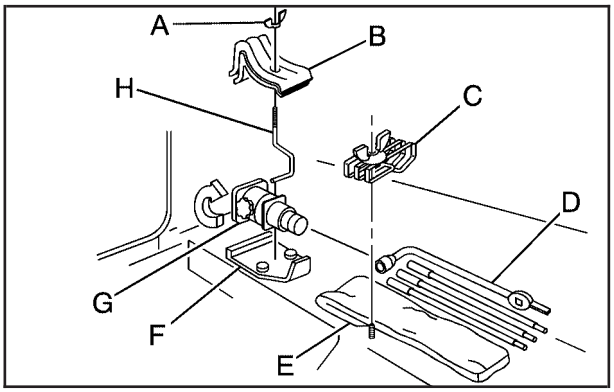

A. Wing Nut
B. Wheel Blocks
C. Retaining Bracket and Wing Nut
D. Wheel Wrench and Extensions
E. Storage Bag
F. Mounting Bracket
G. Bottle Jack
H. Retaining Hook

To store the jack and jack tools, do the following:

1. Put the jack tools in the tool bag and place them in the retaining bracket.
2. Tighten down the wing nut.
3. Assemble the wheel blocks and bottle jack together with the wing nut and retaining hook.

4. Position the jack in the mounting bracket. Position the holes in the base of the jack onto the pin in the mounting bracket.

Store the tire under the rear of the vehicle in the spare tire carrier. Use the art and text following to assist you:

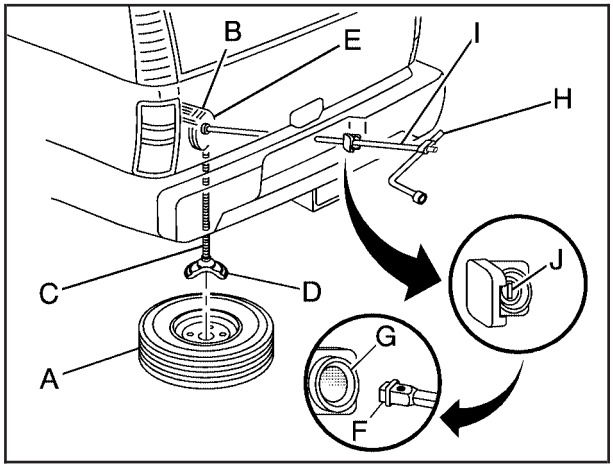

A. Spare Tire (Valve Stem Pointed Down)
B. Hoist Assembly
C. Hoist Cable
D. Tire Retainer
E. Hoist Shaft
F. Hoist End of Extension Tool
G. Hoist Shaft Access Hole
H. Wheel Wrench
I. Jack Handle Extensions
J. Hoist Lock (If Equipped)

1. Put the tire on the ground at the rear of the vehicle with the valve stem pointed down, and to the rear.

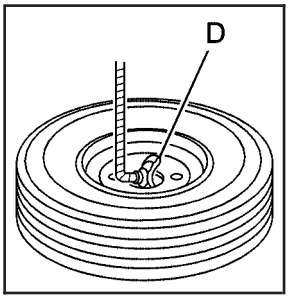

2. Tilt the retainer (D) downward and through the wheel opening. Make sure the retainer is fully seated across the underside of the wheel.

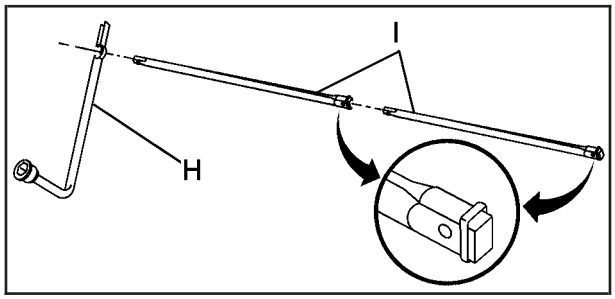

3. Attach the wheel wrench (H) and extensions (I) together.

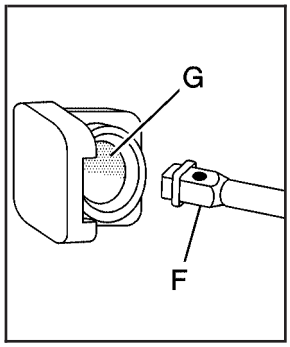

4. Insert the hoist end (F) through the hole (G) in the rear bumper and into the hoist shaft.

5. Raise the tire part way upward. Make sure the retainer is seated in the wheel opening.
6. Raise the tire fully against the underside of the vehicle by turning the wheel wrench clockwise until you hear two clicks or feel it skip twice. You cannot overtighten the cable.

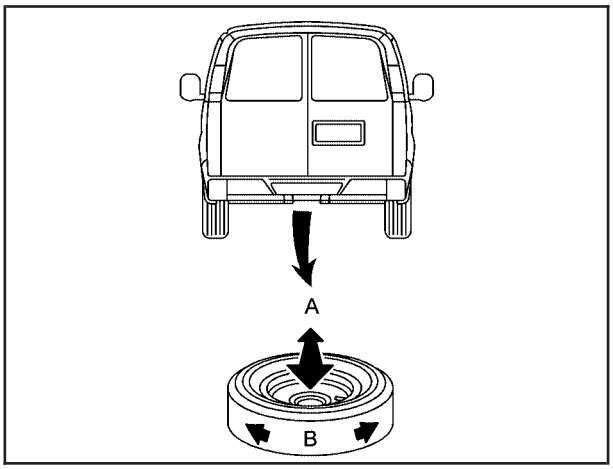

7. Make sure the tire is stored securely. Push, pull, (A) and then try to turn (B) the tire. If the tire moves, use the wheel wrench to tighten the cable.
8. Reinstall the spare tire lock (if equipped).

Spare Tire

Your vehicle, when new, had a fully inflated spare tire. A spare tire may lose air over time, so check its inflation pressure regularly. See *Inflation - Tire Pressure on page 5-79* and *Loading Your Vehicle on page 4-50* for information regarding proper tire inflation and loading your vehicle. For instruction on how to remove, install or store a spare tire, see *Removing the Flat Tire and Installing the Spare Tire on page 5-97* and *Storing a Flat or Spare Tire and Tools on page 5-109*.

After installing the spare tire on your vehicle, you should stop as soon as possible and make sure the spare is correctly inflated. Have the damaged or flat road tire repaired or replaced as soon as you can and installed back onto your vehicle. This way, a spare tire will be available in case you need it again.

Your vehicle may have a different size spare tire than the road tires-those originally installed on your vehicle. This spare tire was developed for use on your vehicle, so it is all right to drive on it. If your vehicle has four-wheel drive and the smaller spare is installed, keep the vehicle in two-wheel drive as much as possible.

If your vehicle has a spare tire that does not match your vehicle's original road tires and wheels in size and type, do not include the spare in the tire rotation.

Appearance Care

Cleaning products can be hazardous. Some are toxic. Other cleaning products can burst into flames if a match is struck near them or if they get on a hot part of the vehicle. Some are dangerous if their fumes are inhaled in an enclosed space. When anything from a container is used to clean the vehicle, be sure to follow the manufacturer's warnings and instructions. Always open the doors or windows of the vehicle when cleaning the inside.

Never use these to clean the vehicle:

- Gasoline
- Benzene
- Naphtha
- Carbon Tetrachloride
- Acetone
- Paint Thinner
- Turpentine
- Lacquer Thinner
- Nail Polish Remover

They can all be hazardous — some more than others — and they can all damage the vehicle, too.

Do not use any of these products unless this manual says you can. In many uses, these will damage the vehicle:

- Alcohol
- Laundry Soap
- Bleach
- Reducing Agents

Fabric/Carpet

Use a vacuum cleaner often to get rid of dust and loose dirt. Wipe vinyl, leather, plastic, and painted surfaces with a clean, damp cloth.

GM-approved cleaning products can be obtained from your dealer.

Here are some cleaning tips:

- Always read the instructions on the cleaner label.
- Clean up stains as soon as you can before they set.
- Carefully scrape off any excess stain.
- Use a clean cloth or sponge, and change to a clean area often. A soft brush may be used if stains are stubborn.
- To avoid forming a ring on fabric after spot cleaning, clean the entire area immediately or it will set.

Most stains can be removed with club soda water. To clean, use the following instructions:

1. For liquids: blot with a clean, soft, white cloth. For solids: remove as much as possible and then vacuum or brush.
2. Apply club soda water to a clean, soft, white cloth. Do not over-saturate; the cloth should not drip water.
3. Clean the entire area. Avoid getting the fabric too wet.
4. Start cleaning from the seams into the stain to avoid a ring effect.
5. Continue cleaning, using a clean area of the cloth each time it becomes soiled.
6. When the stain is removed, blot the cleaned area with another dry, clean, soft, white cloth.

Using Cleaner on Fabric

1. First, try the cleaner on an area of the fabric that is not easily seen to make sure the cleaner does not affect the color of the fabric.
2. For liquids: blot with a clean, soft, white cloth. For solids: remove as much as possible and then vacuum or brush.
3. Spray a small amount of the cleaner onto a clean soft, white, cloth. Do not apply spray directly to the fabric.

4. Start cleaning from the seams into the stain to avoid a ring effect.
5. Continue cleaning, using a clean area of the cloth each time it becomes soiled.
6. When the stain is removed, blot the cleaned area with another dry, clean, soft, white cloth.
7. If the cleaner leaves a ring effect, follow up with the club soda water instructions given earlier in this section.

Special Fabric Cleaning Problems

Stains caused by such things as catsup, black coffee, egg, fruit, fruit juice, milk, soft drinks, vomit, urine, and blood can be removed using the club soda water instructions given earlier in this section. If an odor lingers after cleaning vomit or urine, treat the area with a water and baking soda solution: 1 teaspoon (5 ml) of baking soda to 1 cup (250 ml) of lukewarm water. Let dry.

Stains caused by oil and grease can be cleaned with an approved GM cleaner and a clean, white cloth.

1. Carefully scrape off excess stain.
2. Clean with cool water and allow to dry completely.
3. If a stain remains, follow the “Using Cleaner on Fabric” instructions described earlier.

Vinyl

Use warm water and a clean cloth.

- Rub with a clean, damp cloth to remove dirt. This may have to be done more than once.
- Things like tar, asphalt, and shoe polish will stain if they are not removed quickly. Use a clean cloth and vinyl cleaner. See your dealer for this product.

Leather

Use a soft cloth with lukewarm water and a mild soap or saddle soap and wipe dry with a soft cloth. Then, let the leather dry naturally. Do not use heat to dry.

- For stubborn stains, use a leather cleaner.
- Never use oils, varnishes, solvent-based or abrasive cleaners, furniture polish, or shoe polish on leather.
- Soiled or stained leather should be cleaned immediately. If dirt is allowed to work into the finish, it can harm the leather.

Instrument Panel

Use only mild soap and water to clean the top surfaces of the instrument panel. Sprays containing silicones or waxes may cause annoying reflections in the windshield and even make it difficult to see through the windshield under certain conditions.

Interior Plastic Components

Use only a mild soap and water solution on a soft cloth or sponge. Commercial cleaners may affect the surface finish.

Glass Surfaces

Glass should be cleaned often. GM Glass Cleaner or a liquid household glass cleaner will remove normal tobacco smoke and dust films on interior glass. See *Vehicle Care/Appearance Materials on page 5-119*.

Notice: **If you use abrasive cleaners when cleaning glass surfaces on your vehicle, you could scratch the glass and/or cause damage to the rear window defogger and the integrated radio antenna. When cleaning the glass on your vehicle, use only a soft cloth and glass cleaner.**

Care of Safety Belts

Keep belts clean and dry.

⚠ CAUTION:

Do not bleach or dye safety belts. If you do, it may severely weaken them. In a crash, they might not be able to provide adequate protection. Clean safety belts only with mild soap and lukewarm water.

Weatherstrips

Silicone grease on weatherstrips will make them last longer, seal better, and not stick or squeak. Apply silicone grease with a clean cloth. During very cold, damp weather frequent application may be required. See *Recommended Fluids and Lubricants on page 6-14*.

Washing Your Vehicle

The paint finish on the vehicle provides beauty, depth of color, gloss retention, and durability.

The best way to preserve the vehicle's finish is to keep it clean by washing it often with lukewarm or cold water.

Do not wash the vehicle in the direct rays of the sun. Use a car washing soap. Do not use strong soaps or chemical detergents. Be sure to rinse the vehicle well, removing all soap residue completely. GM-approved cleaning products can be obtained from your dealer. See *Vehicle Care/Appearance Materials on page 5-119*. Do not use cleaning agents that are petroleum based, or that contain acid or abrasives. All cleaning agents should be flushed promptly and not allowed to dry on the surface, or they could stain. Dry the finish with a soft, clean chamois or an all-cotton towel to avoid surface scratches and water spotting.

High pressure car washes may cause water to enter the vehicle.

Cleaning Exterior Lamps/Lenses

Use only lukewarm or cold water, a soft cloth and a car washing soap to clean exterior lamps and lenses. Follow instructions under *Washing Your Vehicle on page 5-116*.

Finish Care

Occasional waxing or mild polishing of your vehicle by hand may be necessary to remove residue from the paint finish. You can get GM-approved cleaning products from your dealer. See *Vehicle Care/Appearance Materials on page 5-119*.

If your vehicle has a "basecoat/clearcoat" paint finish. The clearcoat gives more depth and gloss to the colored basecoat. Always use waxes and polishes that are non-abrasive and made for a basecoat/clearcoat paint finish.

Notice: **Machine compounding or aggressive polishing on a basecoat/clearcoat paint finish may damage it. Use only non-abrasive waxes and polishes that are made for a basecoat/clearcoat paint finish on your vehicle.**

Foreign materials such as calcium chloride and other salts, ice melting agents, road oil and tar, tree sap, bird droppings, chemicals from industrial chimneys, etc., can damage your vehicle's finish if they remain on painted surfaces. Wash the vehicle as soon as possible. If necessary, use non-abrasive cleaners that are marked safe for painted surfaces to remove foreign matter.

Exterior painted surfaces are subject to aging, weather and chemical fallout that can take their toll over a period of years. You can help to keep the paint finish looking new by keeping your vehicle garaged or covered whenever possible.

Protecting Exterior Bright Metal Parts

Bright metal parts should be cleaned regularly to keep their luster. Washing with water is all that is usually needed. However, you may use chrome polish on chrome or stainless steel trim, if necessary.

Use special care with aluminum trim. To avoid damaging protective trim, never use auto or chrome polish, steam or caustic soap to clean aluminum. A coating of wax, rubbed to high polish, is recommended for all bright metal parts.

Windshield and Wiper Blades

If the windshield is not clear after using the windshield washer, or if the wiper blade chatters when running, wax, sap, or other material may be on the blade or windshield.

Clean the outside of the windshield with a glass cleaning liquid or powder and water solution. The windshield is clean if beads do not form when it is rinsed with water.

Grime from the windshield will stick to the wiper blades and affect their performance. Clean the blade by wiping vigorously with a cloth soaked in full-strength windshield washer solvent. Then rinse the blade with water.

Check the wiper blades and clean them as necessary; replace blades that look worn.

Aluminum or Chrome-Plated Wheels

The vehicle may be equipped with either aluminum or chrome-plated wheels.

Keep the wheels clean using a soft clean cloth with mild soap and water. Rinse with clean water. After rinsing thoroughly, dry with a soft clean towel. A wax may then be applied.

Notice: **If you use strong soaps, chemicals, abrasive polishes, cleaners, brushes, or cleaners that contain acid on aluminum or chrome-plated wheels, you could damage the surface of the wheel(s). The repairs would not be covered by your warranty. Use only GM-approved cleaners on aluminum or chrome-plated wheels.**

The surface of these wheels is similar to the painted surface of your vehicle. Do not use strong soaps, chemicals, abrasive polishes, abrasive cleaners, cleaners with acid, or abrasive cleaning brushes on them because you could damage the surface. Do not use chrome polish on aluminum wheels.

Notice: **Using chrome polish on aluminum wheels could damage the wheels. The repairs would not be covered by your warranty. Use chrome polish on chrome wheels only.**

Use chrome polish only on chrome-plated wheels, but avoid any painted surface of the wheel, and buff off immediately after application.

Notice: **If you drive your vehicle through an automatic car wash that has silicone carbide tire cleaning brushes, you could damage the aluminum or chrome-plated wheels. The repairs would not be covered by your warranty. Never drive a vehicle equipped with aluminum or chrome-plated wheels through an automatic car wash that uses silicone carbide tire cleaning brushes.**

Do not take your vehicle through an automatic car wash that has silicone carbide tire cleaning brushes. These brushes can also damage the surface of these wheels.

Tires

To clean the tires, use a stiff brush with tire cleaner.

Notice: **Using petroleum-based tire dressing products on your vehicle may damage the paint finish and/or tires. When applying a tire dressing, always wipe off any overspray from all painted surfaces on your vehicle.**

Sheet Metal Damage

If the vehicle is damaged and requires sheet metal repair or replacement, make sure the body repair shop applies anti-corrosion material to parts repaired or replaced to restore corrosion protection.

Original manufacturer replacement parts will provide the corrosion protection while maintaining the warranty.

Finish Damage

Any stone chips, fractures or deep scratches in the finish should be repaired right away. Bare metal will corrode quickly and may develop into major repair expense.

Minor chips and scratches can be repaired with touch-up materials available from your GM dealer. Larger areas of finish damage can be corrected in your GM dealer's body and paint shop.

Underbody Maintenance

Chemicals used for ice and snow removal and dust control can collect on the underbody. If these are not removed, corrosion and rust can develop on the underbody parts such as fuel lines, frame, floor pan, and exhaust system even though they have corrosion protection.

At least every spring, flush these materials from the underbody with plain water. Clean any areas where mud and debris can collect. Dirt packed in close areas of the frame should be loosened before being flushed. Your GM dealer or an underbody car washing system can do this for you.

Chemical Paint Spotting

Some weather and atmospheric conditions can create a chemical fallout. Airborne pollutants can fall upon and attack painted surfaces on the vehicle. This damage can take two forms: blotchy, ring-shaped discolorations, and small, irregular dark spots etched into the paint surface.

Although no defect in the paint job causes this, GM will repair, at no charge to the owner, the surfaces of new vehicles damaged by this fallout condition within 12 months or 12,000 miles (20 000 km) of purchase, whichever occurs first.

Vehicle Care/Appearance Materials

See your GM dealer for more information on purchasing the following products.

Description	Usage
Polishing Cloth Wax-Treated	Interior and exterior polishing cloth.
Tar and Road Oil Remover	Removes tar, road oil, and asphalt.
Chrome Cleaner and Polish	Use on chrome or stainless steel.
White Sidewall Tire Cleaner	Removes soil and black marks from whitewalls.
Vinyl Cleaner	Cleans vinyl tops, upholstery, and convertible tops.
Glass Cleaner	Removes dirt, grime, smoke and fingerprints.
Chrome and Wire Wheel Cleaner	Removes dirt and grime from chrome wheels and wire wheel covers.
Finish Enhancer	Removes dust, fingerprints, and surface contaminants. Spray on and wipe off.

Description	Usage
Swirl Remover Polish	Removes swirl marks, fine scratches, and other light surface contamination.
Cleaner Wax	Removes light scratches and protects finish.
Foaming Tire Shine Low Gloss	Cleans, shines, and protects in one step. No wiping necessary.
Wash Wax Concentrate	Medium foaming shampoo. Cleans and lightly waxes. Biodegradable and phosphate free.
Spot Lifter	Quickly removes spots and stains from carpets, vinyl, and cloth upholstery.
Odor Eliminator	Odorless spray odor eliminator used on fabrics, vinyl, leather and carpet.
See your General Motors parts department for these products. See *Recommended Fluids and Lubricants on page 6-14*.	

Vehicle Identification

Vehicle Identification Number (VIN)

This is the legal identifier for your vehicle. It appears on a plate in the front corner of the instrument panel, on the driver's side. You can see it if you look through the windshield from outside your vehicle. The VIN also appears on the Vehicle Certification and Service Parts labels and the certificates of title and registration.

Engine Identification

The eighth character in your VIN is the engine code. This code will help you identify your engine, specifications and replacement parts.

Service Parts Identification Label

You will find this label on the inside of the glove box. It is very helpful if you ever need to order parts. On this label, you will find the following:

- VIN
- Model designation
- Paint information
- Production options and special equipment

Be sure that this label is not removed from the vehicle.

Electrical System

Add-On Electrical Equipment

Notice: **Don't add anything electrical to your vehicle unless you check with your dealer first. Some electrical equipment can damage your vehicle and the damage wouldn't be covered by your warranty. Some add-on electrical equipment can keep other components from working as they should.**

Your vehicle has an airbag system. Before attempting to add anything electrical to your vehicle, see *Servicing Your Airbag-Equipped Vehicle on page 1-80*.

Windshield Wiper Fuses

The windshield wiper motor is protected by an internal circuit breaker and a fuse. If the motor overheats due to heavy snow, etc., the wiper will stop until the motor cools. If the overload is caused by some electrical problem and not snow, etc., be sure to get it fixed.

Power Windows and Other Power Options

Circuit breakers protect the power windows and other power accessories. When the current load is too heavy, the circuit breaker opens and closes, protecting the circuit until the problem is fixed or goes away.

Fuses and Circuit Breakers

The wiring circuits in your vehicle are protected from short circuits by a combination of fuses, circuit breakers and fusible thermal links. This greatly reduces the chance of fires caused by electrical problems.

Look at the silver-colored band inside the fuse. If the band is broken or melted, replace the fuse. Be sure you replace a bad fuse with a new one of the identical size and rating.

If you ever have a problem on the road and don't have a spare fuse, you can borrow one that has the same amperage. Just pick some feature of your vehicle that you can get along without – like the radio or cigarette lighter – and use its fuse, if it is the correct amperage. Replace it as soon as you can.

Instrument Panel Fuse Block

The fuse block access door is on the driver's side edge of the instrument panel. Pull off the cover to access the fuse block.

To remove fuses, hold the end of the fuse between your thumb and index finger and pull straight out.

You may have spare fuses located behind the fuse block access door. These can be used to replace a bad fuse. However, make sure it is of the correct amperage.

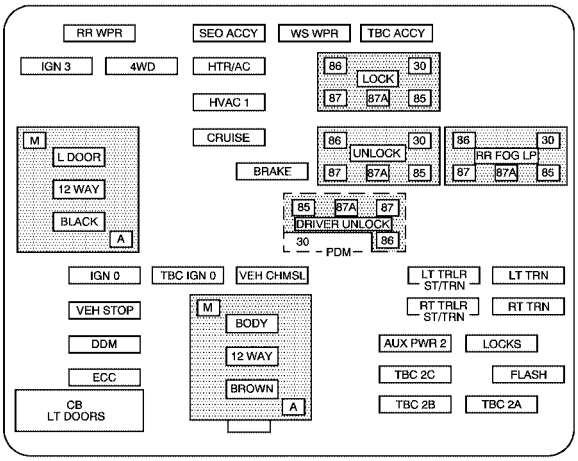

Fuses	Usage
RR WPR	Not Used
SEO ACCY	Special Equipment Option Accessory
WS WPR	Windshield Wipers
TBC ACCY	Truck Body Controller Accessory
IGN 3	Ignition, Heated Seats

Fuses	Usage
4WD	Four-Wheel Drive System, Auxiliary Battery
HTR A/C	Climate Control System
LOCK (Relay)	Power Door Lock Relay (Lock Function)
HVAC 1	Climate Control System
L DOOR	Driver's Door Harness Connection
CRUISE	Cruise Control, Power Take Off (PTO)
UNLOCK (Relay)	Power Door Lock Relay (Unlock Function)
RR FOG LP	Not Used
BRAKE	Anti-Lock Brake System
DRIVER UNLOCK	Power Door Lock Relay (Driver's Door Unlock Function)
IGN 0	TCM
TBC IGN 0	Truck Body Controller
VEH CHMSL	Vehicle and Trailer High Mounted Stoplamp
LT TRLR ST/TRN	Left Turn Signal/Stop Trailer
LT TRN	Left Turn Signals and Sidemarkers

Fuses	Usage
VEH STOP	Vehicle Stoplamps, Brake Module, Electronic Throttle Control Module
RT TRLR ST/TRN	Right Turn Signal/Stop Trailer
RT TRN	Right Turn Signals and Sidemarkers
BODY	Harness Connector
DDM	Driver Door Module
AUX PWR 2	Not Used
LOCKS	Power Door Lock System
ECC	Not Used
TBC 2C	Truck Body Controller
FLASH	Flasher Module
CB LT DOORS	Left Power Windows Circuit Breaker
TBC 2B	Truck Body Controller
TBC 2A	Truck Body Controller

Center Instrument Panel Fuse Block

The center instrument panel utility block is located underneath the instrument panel, to the left of the steering column.

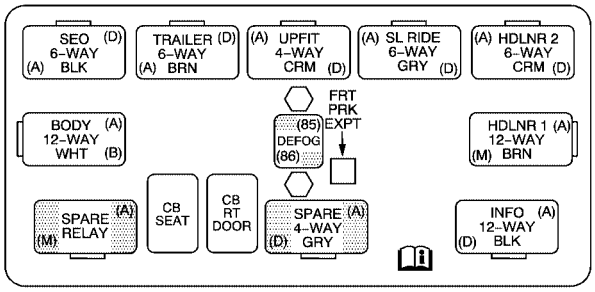

Device	Usage
SEO	Special Equipment Option
TRAILER	Trailer Brake Wiring
UPFIT	Upfitter (Not Used)
SL RIDE	Ride Control Harness Connection
HDLR 2	Headliner Wiring Connector
BODY	Body Wiring Connector

Device	Usage
DEFOG	Rear Defogger Relay
HDLNR 1	Headliner Wiring Connector 1
SPARE RELAY	Not Used
CB SEAT	Driver and Passenger Seat Module Circuit Breaker
CB RT DOOR	Right Power Windows Circuit Breaker
SPARE	Not Used
INFO	Infotainment Harness Connection

Underhood Fuse Block

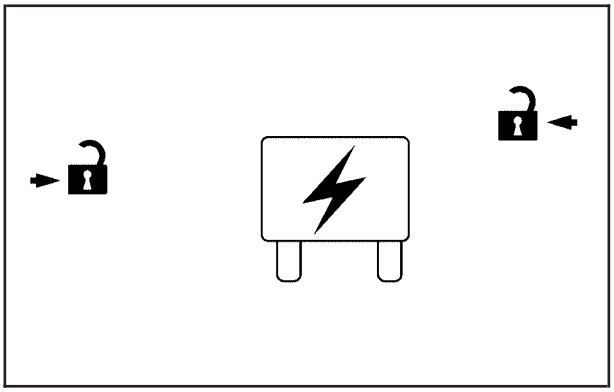

The underhood fuse block in the engine compartment on the driver's side of the vehicle near the battery. Lift the cover for access to the fuse/relay block.

To remove fuses hold the end of the fuse between your thumb and index finger and pull straight out.

See *Engine Compartment Overview on page 5-14* for more information on its location.

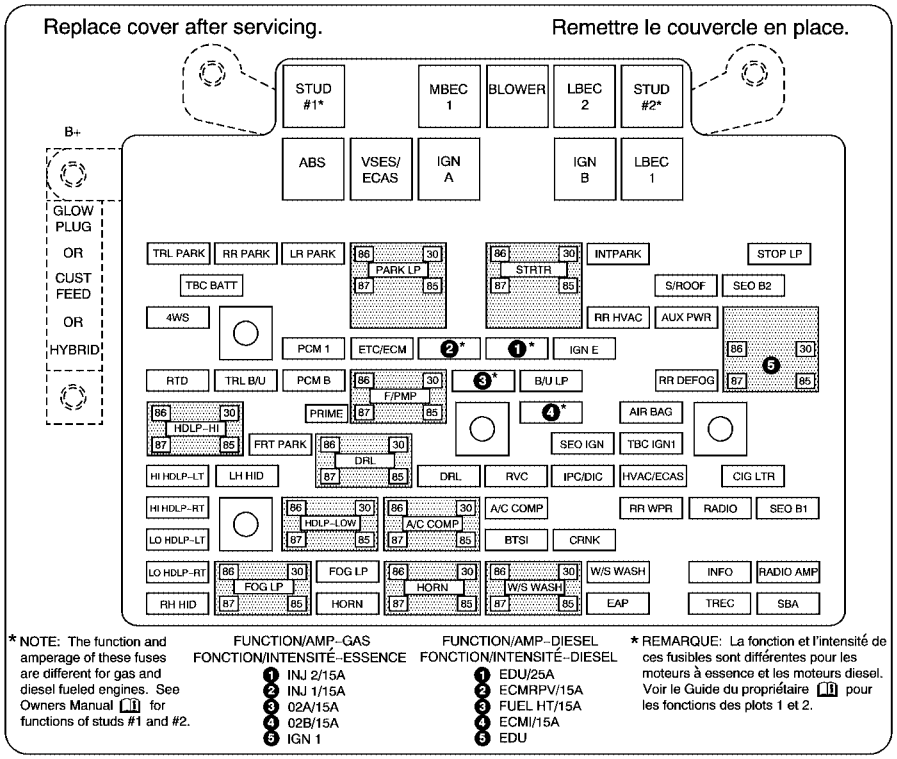

* NOTE: The function and amperage of these fuses are different for gas and diesel fueled engines. See Owners Manual for functions of studs #1 and #2.

FUNCTION/AMP–GAS
FONCTION/INTENSITÉ–ESSENCE

1. INJ 2/15A
2. INJ 1/15A
3. 02A/15A
4. 02B/15A
5. IGN 1

FUNCTION/AMP–DIESEL
FONCTION/INTENSITÉ–DIESEL

1. EDU/25A
2. ECMRPV/15A
3. FUEL HT/15A
4. ECMI/15A
5. EDU

* REMARQUE: La fonction et l'intensité de ces fusibles sont différentes pour les moteurs à essence et les moteurs diesel. Voir le Guide du propriétaire pour les fonctions des plots 1 et 2.

***1** — Gasoline Engine and Diesel Engine.

***2** — Gasoline Engine; ECMRPV — Diesel Engine.

***3** — Gasoline Engine; FUEL HT — Diesel Engine.

***4** — Gasoline Engine; ECM I — Diesel Engine.

***5** — IGN/EDU

Fuses	Usage
GLOW PLUG	Diesel Glow Plugs and Intake Air Heater
CUST FEED	Gasoline Accessory Power
HYBRID	Hybrid
STUD #1	Auxiliary Power (Single Battery and Diesels Only)/ Dual Battery (TP2) Do not install fuse.
MBEC	Mid Bussed Electrical Center Power Feed, Front Seats, Right Doors
BLOWER	Front Climate Control Fan
LBEC	Left Bussed Electrical Center, Door Modules, Door Locks, Auxiliary Power Outlet—Rear Cargo Area and Instrument Panel
STUD 2	Accessory Power/Trailer Wiring Brake Feed

Fuses	Usage
ABS	Anti-Lock Brakes
VSES/ECAS	Vehicle Stability
IGN A	Ignition Power
IGN B	Ignition Power
LBEC 1	Left Bussed Electrical Center, Left Doors, Truck Body Controller, Flasher Module
TRL PARK	Parking Lamps Trailer Wiring
RR PARK	Right Rear Parking and Sidemarker Lamps
LR PARK	Left Rear Parking and Sidemarker Lamps
PARK LP	Parking Lamps Relay
STRTR	Starter Relay
INTPARK	Interior Lamps
STOP LP	Stoplamps
TBC BATT	Truck Body Controller Battery Feed
S/ROOF	Sunroof
SEO B2	Off-Road Lamps
4WS	Vent Solenoid Canister/Quadrasteer Module Power
RR HVAC	Not Used

Fuses	Usage
AUX PWR	Auxiliary Power Outlet — Console
IGN 1	Ignition Relay
PCM 1	Powertrain Control Module
ETC/ECM	Electronic Throttle Control, Electronic Brake Controller
IGN E	Instrument Panel Cluster, Air Conditioning Relay, Turn Signal/Hazard Switch, Starter Relay
RTD	Ride Control
TRL B/U	Backup Lamps Trailer Wiring
PCM B	Powertrain Control Module, Fuel Pump
F/PMP	Fuel Pump (Relay)
B/U LP	Back-up Lamps, Automatic Transmission Shift Lock Control System
RR DEFOG	Rear Window Defogger
HDLP-HI	Headlamp High Beam Relay
PRIME	Not Used
02B	Oxygen Sensors
AIRBAG	Supplemental Inflatable Restraint System
FRT PARK	Front Parking Lamps, Sidemarker Lamps

Fuses	Usage
DRL	Daytime Running Lamps (Relay)
SEO IGN	Rear Defog Relay
TBC IGN1	Truck Body Controller Ignition
HI HDLP-LT	High Beam Headlamp-Left
LH HID	Not Used
DRL	Daytime Running Lamps
RVC	Regulated Voltage Control
IPC/DIC	Instrument Panel Cluster/Driver Information Center
HVAC/ECAS	Climate Control Controller
CIG LTR	Cigarette Lighter
HI HDLP-RT	High Beam Headlamp-Right
HDLP-LOW	Headlamp Low Beam Relay
A/C COMP	Air Conditioning Compressor
A/C COMP	Air Conditioning Compressor Relay
RR WPR	Not Used
RADIO	Audio System
SEO B1	Mid Bussed Electrical Center, Rear Heated Seats, HomeLink
LO HDLP-LT	Headlamp Low Beam-Left

Fuses	Usage
BTSI	Brake Transmission Shift Interlock System
CRNK	Starting System
LO HDLP-RT	Headlamp Low Beam-Right
FOG LP	Fog Lamp Relay
FOG LP	Fog Lamps
HORN	Horn Relay
W/S WASH	Windshield Washer Pump Relay
W/S WASH	Windshield Washer Pump
INFO	OnStar®/Rear Seat Entertainment
RADIO AMP	Radio Amplifier
RH HID	Not Used
HORN	Horn
EAP	Not Used
TREC	All-Wheel Drive Module
SBA	Supplemental Brake Assist

Auxiliary Electric Cooling Fan Fuse Block

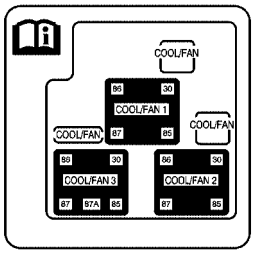

The auxiliary electric cooling fan fuse block is located in the engine compartment on the driver's side of the vehicle next to the underhood fuse block.

Lift the cover for access to the fuse/relay block.

Fuses	Usage
COOL/FAN	Cooling Fan
COOL/FAN	Cooling Fan Relay Fuse
COOL/FAN	Cooling Fan Fuse

Relays	Usage
COOL/FAN 1	Cooling Fan Relay 1
COOL/FAN 3	Cooling Fan Relay 3
COOL/FAN 2	Cooling Fan Relay 2

Capacities and Specifications

The following approximate capacities are given in English and metric conversions. See *Recommended Fluids and Lubricants on page 6-14* for more information.

Application	Capacities	
	English	Metric
Air Conditioning Refrigerant R134a	1.6 lbs	0.7 kg
Cooling System		
VORTEC™ 4300 V6 Automatic with Front A/C*	14.8 qts	14.0 L
VORTEC™ 4300 V6 Automatic with Front A/C**	16.4 qts	15.5 L
VORTEC™ 4300 V6 Manual with Front A/C*	15.1 qts	14.3 L
VORTEC™ 4300 V6 Manual with Front A/C**	16.6 qts	15.7 L
VORTEC™ 4800 V8 Automatic with Front A/C*	—	—
VORTEC™ 4800 V8 Automatic with Front A/C**	16.8 qts	15.9 L
VORTEC™ 4800 V8 Manual with Front A/C*	—	—

Application	Capacities	
	English	Metric
Cooling System		
VORTEC™ 4800 V8 Manual with Front A/C**	17.0 qts	16.1 L
VORTEC™ 5300 V8 Automatic with Front A/C*	—	—
VORTEC™ 5300 V8 Automatic with Front A/C**	16.8 qts	15.9 L
VORTEC™ 6000 V8 Automatic*	16.0 qts	15.1 L
VORTEC™ 6000 V8 Automatic**	16.7 qts	15.8 L
VORTEC™ 6000 V8 Manual*	16.4 qts	15.5 L
VORTEC™ 6000 V8 Manual**	—	—
VORTEC™ 8100 V8 HD Automatic*	25.0 qts	23.7 L
VORTEC™ 8100 V8 HD Automatic**	—	—
VORTEC™ 8100 V8 Automatic*	26.9 qts	25.5 L
VORTEC™ 8100 V8 Automatic**	—	—
VORTEC™ 8100 V8 Manual*	27.1 qt	25.6 L
VORTEC™ 8100 V8 Manual**	—	—

* Engine Fan Driven cooling system
** Electric Cooling Fan system

Application	Capacities	
	English	Metric
Engine Oil with Filter		
4300 V6	4.5 qt	4.3 L
4800 V8; 5300 V8; 6000 V8	6.0 qt	5.7 L
8100 V8	6.5 qt	6.1 L
Fuel Tank		
Short Bed and 2500 LD	26.0 gal	98.0 L
Long Bed and Chassis Cab (Pickup Box Delete)	36.0 gal	136.0 L
Chassis Cab 3500 and 3500HD — front	27.0 gal	102.0 L
Chassis Cab 3500 and 3500HD — rear	23.0 gal	87.0 L
Wheel Nut Torque	140 ft lb	190 N•m
After refill, the level must be rechecked. Add enough engine coolant so that the fluid is within the proper operating range.		

Engine Specifications

Engine	VIN Code	Transmission	Spark Plug Gap
VORTEC™ 4300 V6	W	Automatic Manual	0.060 inches (1.52 mm)
VORTEC™ 4800 V8	V	Automatic Manual	0.040 inches (1.01 mm)
VORTEC™ 5300 V8	Z	Automatic	0.040 inches (1.01 mm)
VORTEC™ 5300 V8	T	Automatic	0.040 inches (1.01 mm)
VORTEC™ 6000 V8	U	Automatic Manual	0.040 inches (1.01 mm)
VORTEC™ 6000 V8	N	Automatic Manual	0.040 inches (1.01 mm)
VORTEC™ 8100 V8	G	Automatic Manual	0.060 inches (1.52 mm)

✍ NOTES

Section 6 Maintenance Schedule

Maintenance Schedule 6-2
Introduction 6-2
Maintenance Requirements 6-2
Your Vehicle and the Environment 6-2
Using Your Maintenance Schedule 6-2
Scheduled Maintenance 6-4
Additional Required Services 6-6
Maintenance Footnotes 6-8
Owner Checks and Services 6-10
At the First 100, 1,000 and 6,000 Miles (160, 1 600 and 10 000km) 6-11
At Each Fuel Fill 6-11
At Least Once a Month 6-11
At Least Once a Year 6-12
Recommended Fluids and Lubricants 6-14
Normal Maintenance Replacement Parts 6-17
Maintenance Record 6-18

Maintenance Schedule

Introduction

Important: Keep engine oil at the proper level and change as recommended.

Have you purchased the GM Protection Plan? The Plan supplements your new vehicle warranties. See your Warranty and Owner Assistance booklet or your dealer for details.

Maintenance Requirements

Notice: **Maintenance intervals, checks, inspections, replacement parts and recommended fluids and lubricants as prescribed in this manual are necessary to keep your vehicle in good working condition. Any damage caused by failure to follow scheduled maintenance may not be covered by warranty.**

Your Vehicle and the Environment

Proper vehicle maintenance not only helps to keep your vehicle in good working condition, but also helps the environment. All recommended maintenance is important. Improper vehicle maintenance can even affect the quality of the air we breathe. Improper fluid levels or the wrong tire inflation can increase the level of emissions from your vehicle. To help protect our environment, and to keep your vehicle in good condition, be sure to maintain your vehicle properly.

Using Your Maintenance Schedule

We at General Motors want to help you keep your vehicle in good working condition. But we do not know exactly how you will drive it. You may drive very short distances only a few times a week. Or you may drive long distances all the time in very hot, dusty weather. You may use your vehicle in making deliveries. Or you may drive it to work, to do errands or in many other ways.

Because of all the different ways people use their vehicles, maintenance needs vary. You may need more frequent checks and replacements. So please read the following and note how you drive. If you have any questions on how to keep your vehicle in good condition, see your GM Goodwrench® dealer.

This schedule is for vehicles that:

- carry passengers and cargo within recommended limits. You will find these limits on the tire and loading information label. See *Loading Your Vehicle on page 4-50*.
- are driven on reasonable road surfaces within legal driving limits.
- are driven off-road in the recommended manner. See *Off-Road Driving with Your Four-Wheel-Drive Vehicle on page 4-20*.
- use the recommended fuel. See *Gasoline Octane on page 5-6*.

The services in *Scheduled Maintenance on page 6-4* should be performed when indicated. See *Additional Required Services on page 6-6* and *Maintenance Footnotes on page 6-8* for further information.

⚠ CAUTION:

Performing maintenance work on a vehicle can be dangerous. In trying to do some jobs, you can be seriously injured. Do your own maintenance work only if you have the required know-how and the proper tools and equipment for the job. If you have any doubt, see your GM Goodwrench® dealer to have a qualified technician do the work.

Some maintenance services can be complex. So, unless you are technically qualified and have the necessary equipment, you should have your GM Goodwrench® dealer do these jobs.

When you go to your GM Goodwrench® dealer for your service needs, you will know that GM-trained and supported service technicians will perform the work using genuine GM parts.

If you want to purchase service information, see *Service Publications Ordering Information on page 7-11*.

Owner Checks and Services on page 6-10 tells you what should be checked, when to check it and what you can easily do to help keep your vehicle in good condition.

The proper replacement parts, fluids and lubricants to use are listed in *Recommended Fluids and Lubricants on page 6-14* and *Normal Maintenance Replacement Parts on page 6-17*. When your vehicle is serviced, make sure these are used. All parts should be replaced and all necessary repairs done before you or anyone else drives the vehicle. We recommend the use of genuine GM parts.

Scheduled Maintenance

When the CHANGE ENGINE OIL message comes on, it means that service is required for your vehicle. Have your vehicle serviced as soon as possible within the next 600 miles (1 000 km). It is possible that, if you are driving under the best conditions, the engine oil life system may not indicate that vehicle service is necessary for over a year. However, your engine oil and filter must be changed at least once a year and at this time the system must be reset. Your GM Goodwrench® dealer has GM-trained service technicians who will perform this work using genuine GM parts and reset the system.

If the engine oil life system is ever reset accidentally, you must service your vehicle within 3,000 miles (5 000 km) since your last service. Remember to reset the oil life system whenever the oil is changed. See *Engine Oil Life System (Gasoline Engine) on page 5-23* for information on the Engine Oil Life System and resetting the system.

When the CHANGE ENGINE OIL message appears, certain services, checks and inspections are required. Required services are described in the following for “Maintenance I” and “Maintenance II.” Generally, it is recommended that your first service be Maintenance I, your second service be Maintenance II and that you alternate Maintenance I and Maintenance II thereafter. However, in some cases, Maintenance II may be required more often.

Maintenance I — Use Maintenance I if the CHANGE ENGINE OIL message comes on within 10 months since the vehicle was purchased or Maintenance II was performed.

Maintenance II — Use Maintenance II if the previous service performed was Maintenance I. Always use Maintenance II whenever the message comes on 10 months or more since the last service or if the message has not come on at all for one year.

Scheduled Maintenance

Service	Maintenance I	Maintenance II
Change engine oil and filter. See *Engine Oil (Gasoline Engine) on page 5-20*. Reset oil life system. See *Engine Oil Life System (Gasoline Engine) on page 5-23*. *An Emission Control Service.*	•	•
Allison Transmission® only: Replace external control-main filter only at the first maintenance service performed on the vehicle.		
Lubricate chassis components. *See footnote #.*	•	•
Visually check for any leaks or damage. *See footnote (j).*	•	•
Inspect engine air cleaner filter or change indicator (if equipped). If necessary, replace filter. See *Engine Air Cleaner/Filter on page 5-25*. *An Emission Control Service. See footnotes † and (p).*		•
Rotate tires and check inflation pressures and wear. See *Tires on page 5-72*.	•	•
Inspect brake system. *See footnote (a).*	•	•
Check engine coolant and windshield washer fluid levels and add fluid as needed.	•	•
Perform any needed additional services. See “Additional Required Services” in this section.	•	•
Inspect suspension and steering components. *See footnote (b).*		•
Inspect engine cooling system. *See footnote (c).*		•
Inspect wiper blades. *See footnote (d).*		•
Inspect restraint system components. *See footnote (e).*		•
Lubricate body components. *See footnote (f).*		•

Scheduled Maintenance (cont'd)

Service	Maintenance I	Maintenance II
Check transmission fluid level and add fluid as needed.		•
Inspect shields, vehicles with diesel engine or with GVWR above 10,000 lbs (4 536 kg) only. *See footnote (n).*		•

Additional Required Services

The following services should be performed at the first maintenance service (I or II) after the indicated miles (kilometers) shown for each item.

Additional Required Services

Service and Miles (Kilometers)	25,000 (41 500)	50,000 (83 000)	75,000 (125 000)	100,000 (166 000)	125,000 (207 500)	150,000 (240 000)
Inspect fuel system for damage or leaks.	•	•	•	•	•	•
Inspect exhaust system for loose or damaged components.	•	•	•	•	•	•
Vehicles without a filter restriction indicator: Replace engine air cleaner filter. See *Engine Air Cleaner/Filter on page 5-25*. *An Emission Control Service.*		•		•		•
6-speed manual transmission only: Change clutch fluid. *See footnote (l).*	•	•	•	•	•	•

Additional Required Services (cont'd)

Service and Miles (Kilometers)	25,000 (41 500)	50,000 (83 000)	75,000 (125 000)	100,000 (166 000)	125,000 (207 500)	150,000 (240 000)
Allison Transmission® only: Change automatic transmission fluid and filter (severe service). *See footnote (m).*	•	•	•	•	•	•
Allison Transmission® only: Change automatic transmission fluid and filter (normal service).		•		•		•
Except Allison Transmission®: Change automatic transmission fluid and filter (severe service). *See footnote (h).*		•		•		•
Except Allison Transmission®: Change automatic transmission fluid and filter (normal service).				•		
Four-wheel drive with automatic transfer case only: Change transfer case fluid. *See footnote (g).*		•		•		•
Inspect evaporative control system. *An Emission Control Service. See footnotes † and (k).*		•		•		•
Replace spark plugs and inspect spark plug wires. *An Emission Control Service.*				•		

Additional Required Services (cont'd)

Service and Miles (Kilometers)	25,000 (41 500)	50,000 (83 000)	75,000 (125 000)	100,000 (166 000)	125,000 (207 500)	150,000 (240 000)
Engine cooling system service (or every five years, whichever occurs first). *An Emission Control Service. See footnote (i).*						•
Inspect engine accessory drive belt. *An Emission Control Service.*						•
5-speed manual transmission only: Change manual transmission fluid.						•

Maintenance Footnotes

† *The U.S. Environmental Protection Agency or the California Air Resources Board has determined that the failure to perform this maintenance item will not nullify the emission warranty or limit recall liability prior to the completion of the vehicle's useful life. We, however, urge that all recommended maintenance services be performed at the indicated intervals and the maintenance be recorded.*

 # Lubricate the front suspension, ball joints, steering linkage, transmission shift linkage and parking brake cable guides. Ball joints should not be lubricated unless their temperature is 10°F (–12°C) or higher, or they could be damaged. Vehicles used under severe commercial operating conditions require lubrication on a regular basis every 3,000 miles (5 000 km).

(a) *Visually inspect brake lines and hoses for proper hook-up, binding, leaks, cracks, chafing, etc. Inspect disc brake pads for wear and rotors for surface condition. Inspect drum brake linings for wear or cracks. Inspect other brake parts, including drums, wheel cylinders, calipers, parking brake, etc.*

(b) *Visually inspect front and rear suspension and steering system for damaged, loose or missing parts, signs of wear or lack of lubrication. Inspect power steering lines and hoses for proper hook-up, binding, leaks, cracks, chafing, etc. Visually check constant velocity joints, rubber boots and axle seals for leaks.*

(c) *Visually inspect hoses and have them replaced if they are cracked, swollen or deteriorated. Inspect all pipes, fittings and clamps; replace with genuine GM parts as needed. To help ensure proper operation, a pressure test of the cooling system and pressure cap and cleaning the outside of the radiator and air conditioning condenser is recommended at least once a year.*

(d) *Visually inspect wiper blades for wear or cracking. Replace blade inserts that appear worn or damaged or that streak or miss areas of the windshield.*

(e) *Make sure the safety belt reminder light and all your belts, buckles, latch plates, retractors and anchorages are working properly. Look for any other loose or damaged safety belt system parts. If you see anything that might keep a safety belt system from doing its job, have it repaired. Have any torn or frayed safety belts replaced. Also look for any opened or broken airbag coverings, and have them repaired or replaced. (The airbag system does not need regular maintenance.)*

(f) *Lubricate all key lock cylinders, body door hinges, hood latch assembly, secondary latch, pivots, spring anchor, release pawl, tailgate hinges, tailgate linkage, tailgate handle pivot points, latch bolt, fuel door hinge, locks and folding seat hardware. More frequent lubrication may be required when exposed to a corrosive environment. Applying silicone grease on weatherstrips with a clean cloth will make them last longer, seal better and not stick or squeak.*

(g) *Check vent hose at transfer case for kinks and proper installation.*

(h) *Change automatic transmission fluid and filter if the vehicle GVWR is over 8600 lbs or if the vehicle is mainly driven under one or more of these conditions:*

- *In heavy city traffic where the outside temperature regularly reaches 90°F (32°C) or higher.*
- *In hilly or mountainous terrain.*
- *When doing frequent trailer towing.*
- *Uses such as found in taxi, police or delivery service.*

(i) *Drain, flush and refill cooling system. This service can be complex; you should have your dealer perform this service. See Engine Coolant on page 5-35* for what to use. Inspect hoses. Clean radiator, condenser, pressure cap and filler neck. Pressure test the cooling system and pressure cap.

(j) *A fluid loss in any vehicle system could indicate a problem. Have the system inspected and repaired and the fluid level checked. Add fluid if needed.*

(k) *Inspect system. Check all fuel and vapor lines and hoses for proper hook-up, routing and condition. Check that the purge valve works properly (if equipped). Replace as needed.*

(l) *Change clutch fluid (or every 24 months, whichever occurs first).*

(m) *Change automatic transmission fluid and filter if the vehicle is mainly driven under one or more of these conditions:*

- *In heavy city traffic where the outside temperature regularly reaches 90°F (32°C) or higher.*
- *In hilly or mountainous terrain.*
- *When doing frequent trailer towing.*
- *Uses such as found in taxi, police or delivery service.*

(n) *Vehicles with diesel engine or with GVWR above 10,000 lbs (4 536 kg) only: Inspect shields for damage or looseness. Adjust or replace as required. This is a Noise Emission Control Service. Applicable only to vehicles sold in the United States.*

(p) *If you drive regularly under dusty conditions, inspect the filter or change indicator (if equipped) at each engine oil change.*

Owner Checks and Services

These owner checks and services should be performed at the intervals specified to help ensure the safety, dependability and emission control performance of your vehicle. Your GM Goodwrench® dealer can assist you with these checks and services.

Be sure any necessary repairs are completed at once. Whenever any fluids or lubricants are added to your vehicle, make sure they are the proper ones, as shown in *Recommended Fluids and Lubricants on page 6-14*.

At the First 100, 1,000 and 6,000 Miles (160, 1 600 and 10 000km)

Check dual wheel nut torque. For proper torque, see *Capacities and Specifications on page 5-130*.

At Each Fuel Fill

It is important to perform these underhood checks at each fuel fill.

Engine Oil Level Check

Check the engine oil level and add the proper oil if necessary. See *Engine Oil (Gasoline Engine) on page 5-20* for further details.

Notice: **It is important to check your oil regularly and keep it at the proper level. Failure to keep your engine oil at the proper level can cause damage to your engine not covered by your warranty.**

Engine Coolant Level Check

Check the engine coolant level and add DEX-COOL® coolant mixture if necessary. See *Engine Coolant on page 5-35* for further details.

Windshield Washer Fluid Level Check

Check the windshield washer fluid level in the windshield washer tank and add the proper fluid if necessary.

At Least Once a Month

Tire Inflation Check

Visually inspect your tires and make sure tires are inflated to the correct pressures. Do not forget to check your spare tire. See *Tires on page 5-72* for further details. Check to make sure the spare tire is stored securely. Push, pull and then try to turn the spare tire. If it moves, tighten it. See *Changing a Flat Tire on page 5-92*.

At Least Once a Year

Starter Switch Check

⚠ CAUTION:

When you are doing this inspection, the vehicle could move suddenly. If the vehicle moves, you or others could be injured.

1. Before you start, be sure you have enough room around the vehicle.
2. Firmly apply both the parking brake and the regular brake. See *Parking Brake on page 2-48* if necessary.

   Do not use the accelerator pedal, and be ready to turn off the engine immediately if it starts.
3. Try to start the engine in each gear. The starter should work only in PARK (P) or NEUTRAL (N). If the starter works in any other position, contact your GM Goodwrench® dealer for service.

Automatic Transmission Shift Lock Control System Check

⚠ CAUTION:

When you are doing this inspection, the vehicle could move suddenly. If the vehicle moves, you or others could be injured.

1. Before you start, be sure you have enough room around the vehicle. It should be parked on a level surface.
2. Firmly apply the parking brake. See *Parking Brake on page 2-48* if necessary.

   Be ready to apply the regular brake immediately if the vehicle begins to move.
3. With the engine off, turn the ignition to RUN, but do not start the engine. Without applying the regular brake, try to move the shift lever out of PARK (P) with normal effort. If the shift lever moves out of PARK (P), contact your GM Goodwrench® dealer for service.

Ignition Transmission Lock Check

While parked, and with the parking brake set, try to turn the ignition to LOCK in each shift lever position.

- The ignition should turn to LOCK only when the shift lever is in PARK (P).
- The key should come out only in LOCK.

Contact your GM Goodwrench® dealer if service is required.

Parking Brake and Automatic Transmission Park (P) Mechanism Check

⚠ CAUTION:

When you are doing this check, your vehicle could begin to move. You or others could be injured and property could be damaged. Make sure there is room in front of your vehicle in case it begins to roll. Be ready to apply the regular brake at once should the vehicle begin to move.

Park on a fairly steep hill, with the vehicle facing downhill. Keeping your foot on the regular brake, set the parking brake.

- To check the parking brake's holding ability: With the engine running and transmission in NEUTRAL (N), slowly remove foot pressure from the regular brake pedal. Do this until the vehicle is held by the parking brake only.
- To check the PARK (P) mechanism's holding ability: With the engine running, shift to PARK (P). Then release the parking brake followed by the regular brake.

Contact your GM Goodwrench® dealer if service is required.

Underbody Flushing Service

At least every spring, use plain water to flush any corrosive materials from the underbody. Take care to clean thoroughly any areas where mud and other debris can collect.

Recommended Fluids and Lubricants

Fluids and lubricants identified below by name, part number or specification may be obtained from your dealer.

Usage	Fluid/Lubricant
Engine Oil	Engine oil which meets GM Standard GM6094M and displays the American Petroleum Institute Certified for Gasoline Engines starburst symbol. GM Goodwrench® oil meets all the requirements for your vehicle. To determine the proper viscosity for your vehicle's engine, see *Engine Oil (Gasoline Engine) on page 5-20*.
Engine Coolant	50/50 mixture of clean, drinkable water and use only DEX-COOL® Coolant. See *Engine Coolant on page 5-35*.
Hydraulic Brake System	Delco Supreme 11 Brake Fluid or equivalent DOT-3 brake fluid.
Windshield Washer Solvent	GM Optikleen® Washer Solvent.
Hydraulic Clutch System (5–Speed Trans.)	Hydraulic Clutch Fluid (GM Part No. U.S. 12345347, in Canada 10953517) or equivalent DOT-3 brake fluid.
Hydraulic Clutch System (6–Speed Trans.)	Hydraulic Clutch Fluid. Use only GM Part No. U.S. 88958860, in Canada 88901244, Super DOT-4 brake fluid.
Power Steering System	GM Power Steering Fluid (GM Part No. U.S. 89021184, in Canada 89021186).
Manual Transmission (5–Speed with Low Gear, RPO MW3)	GM Goodwrench® Synthetic Manual Transmission Fluid (GM Part No. U.S. 12346190, in Canada 10953477) or equivalent SAE 75W-85 GL-4 gear oil.
Manual Transmission (5–Speed without Low Gear, RPO MG5)	Synchromesh Transmission Fluid (GM Part No. U.S. 12345349, in Canada 10953465).

Usage	Fluid/Lubricant
Manual Transmission (6–Speed)	Synthetic Transmission Fluid approved to Allison Transmission® specification TES-295 (GM Part No. U.S. 12378515, in Canada 88900701).
Automatic Transmission	DEXRON®-III Automatic Transmission Fluid. Look for “Approved for the H-Specification” on the label.
Key Lock Cylinders	Multi-Purpose Lubricant, Superlube (GM Part No. U.S. 12346241, in Canada 10953474).
Floor Shift Linkage	Lubriplate Lubricant Aerosol (GM Part No. U.S. 12346293, in Canada 992723) or lubricant meeting requirements of NLGI #2 Category LB or GC-LB.
Chassis Lubrication	Chassis Lubricant (GM Part No. U.S. 12377985, in Canada 88901242) or lubricant meeting requirements of NLGI #2, Category LB or GC-LB.
Front Axle	SAE 80W-90 Axle Lubricant (GM Part No. U.S. 1052271, in Canada 10950849).

Usage	Fluid/Lubricant
Rear Axle	SAE 75W-90 Synthetic Axle Lubricant (GM Part No. U.S. 12378261, in Canada 10953455) meeting GM Specification 9986115.
Rear Axle (Steerable)	Synthetic Axle Lubricant; use only GM Part No. U.S. 12378557, in Canada 88901362. *Do not add friction modifier.*
Manual Transfer Case	DEXRON®-III Automatic Transmission Fluid. Look for “Approved for the H-Specification” on the label.
Automatic Transfer Case	AUTO-TRAK II Fluid (GM Part No. U.S. 12378508, in Canada 10953626).
Front Axle Propshaft Spline or One-Piece Propshaft Spline (Two-Wheel Drive with Auto. Trans.)	Spline Lubricant, Special Lubricant (GM Part No. U.S. 12345879, in Canada 10953511) or lubricant meeting requirements of GM 9985830.

Usage	Fluid/Lubricant
Rear Driveline Center Spline	Chassis Lubricant (GM Part No. U.S. 12377985, in Canada 88901242) or lubricant meeting requirements of NLGI #2, Category LB or GC-LB.
Hood Hinges	Multi-Purpose Lubricant, Superlube (GM Part No. U.S. 12346241, in Canada 10953474).
Body Door Hinge Pins, Tailgate Hinge and Linkage, Folding Seats and Fuel Door Hinge	Multi-Purpose Lubricant, Superlube (GM Part No. U.S. 12346241, in Canada 10953474).

Usage	Fluid/Lubricant
Tailgate Handle Pivot Points, Hinges, Latch Bolt and Linkage	Multi-Purpose Lubricant, Superlube (GM Part No. U.S. 12346241, in Canada 10953474).
Weatherstrip Conditioning	Dielectric Silicone Grease (GM Part No. U.S. 12345579, in Canada 992887).
Weatherstrip Squeaks	Synthetic Grease with Teflon, Superlube (GM Part No. U.S. 12371287, in Canada 10953437).

Normal Maintenance Replacement Parts

Replacement parts identified below by name, part number, or specification can be obtained from your GM dealer.

Part	GM Part Number	ACDelco® Part Number
Engine Air Cleaner/Filter		
High Capacity	25313348	A1519C*
Standard	25313349	A1518C
Oil Filter		
4300 V6	25010792	PF47
4800 V8; 5300 V8; 6000 V8	88984215	PF46
8100 V8	25324052	PF454
Spark Plugs		
4300 V6	25162556	41–932
4800 V8; 5300 V8; 6000 V8	12571164	41–985
8100 V8	12578277	41–983
Wiper Blades (ITTA Type) 22 inches (56.0 cm)	15153642	—
*A1518C high-capacity air cleaner filter may be substituted.		

Maintenance Record

After the scheduled services are performed, record the date, odometer reading, who performed the service and the type of services performed in the boxes provided. See *Maintenance Requirements on page 6-2* in this section. Any additional information from *Owner Checks and Services on page 6-10* can be added on the following record pages. Also, you should retain all maintenance receipts.

Maintenance Record

Date	Odometer Reading	Serviced By	Maintenance I or Maintenance II	Services Performed

Maintenance Record (cont'd)

Date	Odometer Reading	Serviced By	Maintenance I or Maintenance II	Services Performed

Maintenance Record (cont'd)

Date	Odometer Reading	Serviced By	Maintenance I or Maintenance II	Services Performed

Section 7 Customer Assistance and Information

Customer Assistance and Information 7-2
Customer Satisfaction Procedure 7-2
Online Owner Center 7-3
Customer Assistance for Text Telephone (TTY) Users 7-4
Customer Assistance Offices 7-4
GM Mobility Reimbursement Program 7-5
Roadside Assistance Program 7-5
Courtesy Transportation 7-7
Vehicle Data Collection and Event Data Recorders 7-9
Reporting Safety Defects 7-10
Reporting Safety Defects to the United States Government 7-10
Reporting Safety Defects to the Canadian Government 7-11
Reporting Safety Defects to General Motors 7-11
Service Publications Ordering Information 7-11

Customer Assistance and Information

Customer Satisfaction Procedure

Your satisfaction and goodwill are important to your dealer and to GMC. Normally, any concerns with the sales transaction or the operation of the vehicle will be resolved by your dealer's sales or service departments. Sometimes, however, despite the best intentions of all concerned, misunderstandings can occur. If your concern has not been resolved to your satisfaction, the following steps should be taken:

STEP ONE: Discuss your concern with a member of dealership management. Normally, concerns can be quickly resolved at that level. If the matter has already been reviewed with the sales, service or parts manager, contact the owner of the dealership or the general manager.

STEP TWO: If after contacting a member of dealership management, it appears your concern cannot be resolved by the dealership without further help, contact the GMC Consumer Relations Manager by calling 1-800-GMC-8782 (1-800-462-8782, Customer Assistance prompt). In Canada, contact GM of Canada Customer Communication by calling 1-800-263-3777 (English) or 1-800-263-7854 (French).

We encourage you to call the toll-free number in order to give your inquiry prompt attention. Please have the following information available to give the Customer Assistance Representative:

- Vehicle Identification Number (VIN). This is available from the vehicle registration or title, or the plate at the top left of the instrument panel and visible through the windshield.
- Dealership name and location.
- Vehicle delivery date and present mileage.

When contacting GMC, please remember that your concern will likely be resolved at a dealer's facility. That is why we suggest you follow Step One first if you have a concern.

STEP THREE: Both General Motors and your dealer are committed to making sure you are completely satisfied with your new vehicle. However, if you continue to remain unsatisfied after following the procedure outlined in Steps One and Two, you should file with the BBB Auto Line Program to enforce any additional rights you may have. Canadian owners refer to your Warranty and Owner Assistance Information booklet for information on the Canadian Motor Vehicle Arbitration Plan (CAMVAP).

The BBB Auto Line Program is an out of court program administered by the Council of Better Business Bureaus to settle automotive disputes regarding vehicle repairs or the interpretation of the New Vehicle Limited Warranty. Although you may be required to resort to this informal dispute resolution program prior to filling out a court action, use of the program is free of charge and your case will generally be heard within 40 days. If you do not agree with the decision given in your case, you may reject it and proceed with any other venue for relief available to you.

You may contact the BBB Auto Line Program using the toll-free telephone number or write them at the following address:

BBB Auto Line Program
Council of Better Business Bureaus, Inc.
4200 Wilson Boulevard
Suite 800
Arlington, VA 22203-1838

Telephone: 1-800-955-5100

This program is available in all 50 states and the District of Columbia. Eligibility is limited by vehicle age, mileage, and other factors. General Motors reserves the right to change eligibility limitations and/or discontinue its participation in this program.

Online Owner Center

The Owner Center is a resource for your GM ownership needs. Specific vehicle information can be found in one place.

The Online Owner Center allows you to:

- Get e-mail service reminders.
- Access information about your specific vehicle, including tips and videos and an electronic version of this owner's manual (United States only).
- Keep track of your vehicle's service history and maintenance schedule.
- Find GM dealers for service nationwide.
- Receive special promotions and privileges only available to members (United States only).

Refer to the web for updated information.

To register your vehicle, visit www.MyGMLink.com (United States) or My GM Canada within www.gmcanada.com (Canada).

Customer Assistance for Text Telephone (TTY) Users

To assist customers who are deaf, hard of hearing, or speech-impaired and who use the Text Telephones (TTYs), GMC has TTY equipment available at its Customer Assistance Center. Any TTY user can communicate with GMC by dialing: 1-800-GMC-8583 (462-8583). (TTY users in Canada can dial 1-800-263-3830.)

Customer Assistance Offices

GMC encourages customers to call the toll-free number for assistance. If a U.S. customer wishes to write to GMC, the letter should be addressed to GMC's Customer Assistance Center.

United States

GMC Customer Assistance Center
P.O. Box 33172
Detroit, MI 48232-5172

1-800-GMC-8782 (462-8782)
1-800-GMC-8583 (462-8583) (For Text Telephone devices (TTYs))
Roadside Assistance: 1-800-GMC-8782 (462-8782)
Fax Number: 313-381-0022

From Puerto Rico
1-800-496-9992 (English)
1-800-496-9993 (Spanish)
Fax Number: 313-381-0022

U.S. Virgin Islands:
1-800-496-9994
Fax Number: 313-381-0022

Canada

General Motors of Canada Limited
Customer Communication Centre, 163-005
1908 Colonel Sam Drive
Oshawa, Ontario L1H 8P7

1-800-263-3777 (English)
1-800-263-7854 (French)
1-800-263-3830 (For Text Telephone devices (TTYs))
Roadside Assistance: 1-800-268-6800

All Overseas Locations

Please contact the local General Motors Business Unit.

Mexico, Central America and Caribbean Islands/Countries (Except Puerto Rico and U.S. Virgin Islands)

General Motors de Mexico, S. de R.L. de C.V.
Customer Assistance Center
Paseo de la Reforma # 2740
Col. Lomas de Bezares
C.P. 11910, Mexico, D.F.
01-800-508-0000
Long Distance: 011-52-53 29 0 800

GM Mobility Reimbursement Program

This program, available to qualified applicants, can reimburse you up to $1,000 toward eligible aftermarket driver's or passenger's adaptive equipment you may require for your vehicle, such as hand controls and wheelchair/scooter lifts.

The offer is available for a limited period of time from the date of vehicle purchase/lease. For more details, or to determine your vehicle's eligibility, visit gmmobility.com or call the GM Mobility Assistance Center at 1-800-323-9935. Text telephone (TTY) users, call 1-800-833-9935.

GM of Canada also has a Mobility Program. Call 1-800-GM-DRIVE (463-7483) for details. TTY users call 1-800-263-3830.

Roadside Assistance Program

As the owner of a new GMC vehicle, you are automatically enrolled in the GMC Roadside Assistance program. This value-added service is intended to provide you with peace of mind as you drive in the city or travel the open road. Call 1-800-GMC-8782 (1-800-462-8782) to speak with a GMC Road Assistance representative 24 hours a day, 365 days a year.

We will provide the following services during the Bumper-to-Bumper warranty period, at no expense to you:

- **Fuel Delivery:** Delivery of enough fuel ($5 maximum) for the customer to get to the nearest service station.
- **Lock-out Service (identification required):** Replacement keys or locksmith service will be covered at no charge if you are unable to gain entry into your vehicle. Delivery of the replacement key will be covered within 10 miles (16 km).

- **Emergency Tow:** Tow to the nearest dealership for warranty service or in the event of a vehicle-disabling accident. Assistance provided when the vehicle is mired in sand, mud, or snow.
- **Flat Tire Change:** Installation of a spare tire will be covered at no charge. The customer is responsible for the repair or replacement of the tire if not covered by a warrantable failure.
- **Jump Start:** No-start occurrences which require a battery jump start will be covered at no charge.
- **Dealer Locator Service**
- **Trip Routing:** Your Roadside Assistance Representative can provide you with specific information regarding this feature.
- **Trip Interruption Expense Benefits:** Your Roadside Assistance Representative can provide you with specific information regarding this feature.

In many instances, mechanical failures are covered under GMC's Bumper-to-Bumper warranty. However, when other services are utilized, our Roadside Assistance Representatives will explain any payment obligations you might incur.

For prompt and efficient assistance when calling, please provide the following to the Roadside Assistance Representative:

- Your name, home address, and home telephone number.
- Telephone number of your location.
- Location of the vehicle.
- Model, year, color, and license plate number of the vehicle.
- Mileage, Vehicle Identification Number (VIN) and delivery date of the vehicle.
- Description of the problem.

While we hope you never have the occasion to use our service, it is added security while traveling for you and your family. Remember, we are only a phone call away. GMC Roadside Assistance: 1-800-462-8782, text telephone (TTY) users, call 1-888-889-2438.

GMC reserves the right to limit services or reimbursement to an owner or driver when, in GMC's judgement, the claims become excessive in frequency or type of occurrence.

Roadside Assistance is not part of or included in the coverage provided by the New Vehicle Limited Warranty. GMC reserves the right to make any changes or discontinue the Roadside Assistance program at any time without notification.

Canadian Roadside Assistance

Vehicles purchased in Canada have an extensive roadside assistance program accessible from anywhere in Canada or the United States. Please refer to the Warranty and Owner Assistance Information book.

Courtesy Transportation

GMC has always exemplified quality and value in its offering of motor vehicles. To enhance your ownership experience, we and our participating dealers are proud to offer Courtesy Transportation, a customer support program for new vehicles.

The Courtesy Transportation program is offered to retail purchase/lease customers in conjunction with the Bumper-to-Bumper coverage provided by the New Vehicle Limited Warranty. Several transportation options are available when warranty repairs are required. This will reduce your inconvenience during warranty repairs.

Scheduling Service Appointments

When your vehicle requires warranty service, you should contact your dealer and request an appointment. By scheduling a service appointment and advising your service consultant of your transportation needs, your dealer can help minimize your inconvenience.

If your vehicle cannot be scheduled into the service department immediately, keep driving it until it can be scheduled for service, unless, of course, the problem is safety-related. If it is, please call your dealership, let them know this, and ask for instructions.

If the dealer requests that you simply drop the vehicle off for service, you are urged to do so as early in the work day as possible to allow for the same day repair.

Transportation Options

Warranty service can generally be completed while you wait. However, if you are unable to wait, GMC helps minimize your inconvenience by providing several transportation options. Depending on the circumstances, your dealer can offer you one of the following:

Shuttle Service

Participating dealers can provide you with shuttle service to get you to your destination with minimal interruption of your daily schedule. This includes a one-way or round trip shuttle ride to a destination up to 10 miles from the dealership.

Public Transportation or Fuel Reimbursement

If your vehicle requires overnight warranty repairs, reimbursement of up to a five-day maximum may be available for the use of public transportation such as a taxi or bus. In addition, should you arrange transportation through a friend or relative, reimbursement for reasonable fuel expenses of up to a five-day maximum may be available. Claim amounts should reflect actual costs and be supported by original receipts.

Courtesy Rental Vehicle

Your dealer may arrange to provide you with a courtesy rental vehicle or reimburse you for a rental vehicle that you obtain if your vehicle is kept for a warranty repair. Reimbursement will be limited to a maximum of $30.00 a day and must be supported by receipts. This requires that you sign and complete a rental agreement and meet state, local and rental vehicle provider requirements. Requirements vary and may include minimum age requirements, insurance coverage, credit card, etc. You are responsible for fuel usage charges and may also be responsible for taxes, levies, usage fees, excessive mileage or rental usage beyond the completion of the repair.

Generally it is not possible to provide a like-vehicle as a courtesy rental.

Additional Program Information

Courtesy Transportation is available during the Bumper-to-Bumper warranty coverage period, but it is not part of the New Vehicle Limited Warranty. A separate booklet entitled *Warranty and Owner Assistance Information* furnished with each new vehicle provides detailed warranty coverage information.

Courtesy Transportation is available only at participating dealers and all program options, such as shuttle service, may not be available at every dealer. Please contact your dealer for specific information about availability. All Courtesy Transportation arrangements will be administered by appropriate dealer personnel.

Canadian Vehicles: For warranty repairs during the Complete Vehicle Coverage period of the General Motors of Canada New Vehicle Limited Warranty, alternative transportation may be available under the Courtesy Transportation Program. Please consult your dealer for details.

General Motors reserves the right to unilaterally modify, change or discontinue Courtesy Transportation at any time and to resolve all questions of claim eligibility pursuant to the terms and conditions described herein at its sole discretion.

Vehicle Data Collection and Event Data Recorders

Your vehicle, like other modern motor vehicles, has a number of sophisticated computer systems that monitor and control several aspects of the vehicle's performance. Your vehicle uses on-board vehicle computers to monitor emission control components to optimize fuel economy, to monitor conditions for airbag deployment and, if so equipped, to provide anti-lock braking and to help the driver control the vehicle in difficult driving situations. Some information may be stored during regular operations to facilitate repair of detected malfunctions; other information is stored only in a crash event by computer systems, such as those commonly called event data recorders (EDR).

In a crash event, computer systems, such as the Airbag Sensing and Diagnostic Module (SDM) in your vehicle may record information about the condition of the vehicle and how it was operated, such as data related to engine speed, brake application, throttle position, vehicle speed, safety belt usage, airbag readiness, airbag performance, and the severity of a collision.

If your vehicle is equipped with Quadrasteer, steering performance, including yaw rate, steering wheel angle, and lateral acceleration, is also recorded. This information has been used to improve vehicle crash performance and may be used to improve crash performance of future vehicles and driving safety. Unlike the data recorders on many airplanes, these on-board systems do not record sounds, such as conversation of vehicle occupants.

To read this information, special equipment is needed and access to the vehicle or the device that stores the data is required. GM will not access information about a crash event or share it with others other than:

- with the consent of the vehicle owner or, if the vehicle is leased, with the consent of the lessee,
- in response to an official request of police or similar government office,
- as part of GM's defense of litigation through the discovery process, or
- as required by law.

In addition, once GM collects or receives data, GM may:

- use the data for GM research needs,
- make it available for research where appropriate confidentiality is to be maintained and need is shown, or
- share summary data which is not tied to a specific vehicle with non-GM organizations for research purposes.

Others, such as law enforcement, may have access to the special equipment that can read the information if they have access to the vehicle or the device that stores the data.

If your vehicle is equipped with OnStar®, please check the OnStar® subscription service agreement or manual for information on its operations and data collection.

Reporting Safety Defects

Reporting Safety Defects to the United States Government

If you believe that your vehicle has a defect which could cause a crash or could cause injury or death, you should immediately inform the National Highway Traffic Safety Administration (NHTSA), in addition to notifying General Motors.

If NHTSA receives similar complaints, it may open an investigation, and if it finds that a safety defect exists in a group of vehicles, it may order a recall and remedy campaign. However, NHTSA cannot become involved in individual problems between you, your dealer, or General Motors.

To contact NHTSA, you may either call the Auto Safety Hotline toll-free at 1-800-424-9393 (or 366-0123 in the Washington, D.C. area) or write to:

NHTSA, U.S. Department of Transportation
Washington, D.C. 20590

You can also obtain other information about motor vehicle safety from the hotline.

Reporting Safety Defects to the Canadian Government

If you live in Canada, and you believe that your vehicle has a safety defect, you should immediately notify Transport Canada, in addition to notifying General Motors of Canada Limited. You may write to:

Transport Canada
330 Sparks Street
Tower C
Ottawa, Ontario K1A 0N5

Reporting Safety Defects to General Motors

In addition to notifying NHTSA (or Transport Canada) in a situation like this, we certainly hope you'll notify us. Please call us at 1-800-GMC-8782 (1-800-462-8782), or write:

GMC Customer Assistance Center
P.O. Box 33172
Detroit, MI 48232-5172

In Canada, please call us at 1-800-263-3777 (English) or 1-800-263-7854 (French). Or, write:

General Motors of Canada Limited
Customer Communication Centre, 163-005
1908 Colonel Sam Drive
Oshawa, Ontario L1H 8P7

Service Publications Ordering Information

Service Manuals

Service Manuals have the diagnosis and repair information on engines, transmission, axle suspension, brakes, electrical, steering, body, etc.

Transmission, Transaxle, Transfer Case Unit Repair Manual

This manual provides information on unit repair service procedures, adjustments, and specifications for GM transmissions, transaxles, and transfer cases.

Service Bulletins

Service Bulletins give technical service information needed to knowledgeably service General Motors cars and trucks. Each bulletin contains instructions to assist in the diagnosis and service of your vehicle.

In Canada, information pertaining to Product Service Bulletins can be obtained by contacting your General Motors dealer or by calling 1-800-GM-DRIVE (1-800-463-7483).

Owner's Information

Owner publications are written specifically for owners and intended to provide basic operational information about the vehicle. The owner's manual will include the Maintenance Schedule for all models.

In-Portfolio: Includes a Portfolio, Owner's Manual, and Warranty Booklet.

RETAIL SELL PRICE: $35.00

Without Portfolio: Owner's Manual only.

RETAIL SELL PRICE: $25.00

Current and Past Model Order Forms

Service Publications are available for current and past model GM vehicles. To request an order form, please specify year and model name of the vehicle.

ORDER TOLL FREE: 1-800-551-4123
Monday-Friday 8:00 AM - 6:00 PM
Eastern Time

For Credit Card Orders Only
(VISA-MasterCard-Discover), visit Helm, Inc. on the World Wide Web at: www.helminc.com

Or you can write to:

Helm, Incorporated
P.O. Box 07130
Detroit, MI 48207

Prices are subject to change without notice and without incurring obligation. Allow ample time for delivery.

Note to Canadian Customers: All listed prices are quoted in U.S. funds. Canadian residents are to make checks payable in U.S. funds.

A

Accessory Power Outlets 3-19
Adding Equipment to Your Airbag-Equipped
  Vehicle 1-81
Additives, Fuel 5-7
Add-On Electrical Equipment 5-121
Air Cleaner/Filter, Engine 5-25
Air Conditioning 3-21, 3-22, 3-25
Airbag
  Off Light 3-34
  Passenger Status Indicator 3-36
  Readiness Light 3-34
Airbag Sensing and Diagnostic Module (SDM) 7-9
Airbag System 1-66
  Adding Equipment to Your Airbag-Equipped
    Vehicle 1-81
  Airbag Off Switch 1-73
  How Does an Airbag Restrain? 1-71
  Passenger Sensing System 1-76
  Servicing Your Airbag-Equipped Vehicle 1-80
  What Makes an Airbag Inflate? 1-71
  What Will You See After an Airbag Inflates? 1-72
  When Should an Airbag Inflate? 1-69
  Where Are the Airbags? 1-68
AM-FM Radio 3-70
Antenna, Fixed Mast 3-127
Antenna, XM™ Satellite Radio Antenna System ... 3-127
Anti-Lock Brake System (ABS) 4-6
Anti-Lock Brake, System Warning Light 3-41
Appearance Care 5-112
  Aluminum or Chrome-Plated Wheels 5-117
  Care of Safety Belts 5-115
  Chemical Paint Spotting 5-119
  Cleaning Exterior Lamps/Lenses 5-116
  Fabric/Carpet 5-113
  Finish Care 5-116
  Finish Damage 5-118
  Glass Surfaces 5-115
  Instrument Panel 5-115
  Interior Plastic Components 5-115
  Leather 5-114
  Sheet Metal Damage 5-118
  Tires 5-118
  Underbody Maintenance 5-119
  Vehicle Care/Appearance Materials 5-119
  Vinyl 5-114
  Washing Your Vehicle 5-116
  Weatherstrips 5-115
  Windshield and Wiper Blades 5-117
Ashtrays 3-20
Audio System(s) 3-69
  AM-FM Radio 3-70
  Audio Steering Wheel Controls 3-124
  Care of Your Cassette Tape Player 3-125
  Care of Your CD and DVD Player 3-126
  Care of Your CDs and DVDs 3-126
  Chime Level Adjustment 3-127
  Fixed Mast Antenna 3-127
  Radio with Cassette and CD 3-83

Audio System(s) (cont.)
Radio with CD 3-73
Radio with Six-Disc CD 3-98
Rear Seat Audio (RSA) 3-122
Setting the Time for Radios with Radio Data Systems (RDS) 3-70
Setting the Time for Radios without Radio Data Systems (RDS) 3-69
Theft-Deterrent Feature 3-123
Understanding Radio Reception 3-125
XM™ Satellite Radio Antenna System 3-127
Automatic Headlamp System 3-15
Automatic Transmission
Fluid 5-27, 5-30
Operation 2-26
Auxiliary Roof Mounted Lamp Switch 3-17

B

Battery 5-52
Battery Warning Light 3-38
Before Leaving on a Long Trip 4-41
Brake
Anti-Lock Brake System (ABS) 4-6
Emergencies 4-8
Parking 2-48
System Warning Light 3-39
Brakes 5-49
Braking 4-5
Braking in Emergencies 4-8
Break-In, New Vehicle 2-21
Bulb Replacement 5-62
Center High-Mounted Stoplamp (CHMSL) and Cargo Lamp 5-67
Front Turn Signal, Sidemarker and Daytime Running Lamps 5-64
Halogen Bulbs 5-62
Headlamps 5-63
Pickup Box Identification and Fender Marker Lamps 5-69
Replacement Bulbs 5-71
Roof Marker Lamps 5-65
Taillamps 5-69
Buying New Tires 5-86

C

California Fuel 5-7
Canadian Owners ii
Capacities and Specifications 5-130
Carbon Monoxide 2-15, 2-53, 4-44, 4-68
Care of
Safety Belts 5-115
Your Cassette Tape Player 3-125
Your CD and DVD Player 3-126
Your CDs and DVDs 3-126
Cargo Lamp 3-19
Center Console Storage Area 2-71

Center High-Mounted Stoplamp (CHMSL)
and Cargo Lamp 5-67
Center Passenger Position, Safety Belts 1-25
Chains, Tire 5-90
Check
Engine Light 3-44
Checking Things Under the Hood 5-12
Chemical Paint Spotting 5-119
Child Restraints
Child Restraint Systems 1-39
Infants and Young Children 1-35
Lower Anchorages and Top Tethers
for Children (LATCH System) 1-47
Older Children 1-33
Securing a Child Restraint Designed
for the LATCH System 1-49
Securing a Child Restraint in a Center
Rear Seat Position 1-52
Securing a Child Restraint in a Rear
Outside Seat Position 1-50
Securing a Child Restraint in the Center
Front Seat Position 1-53
Securing a Child Restraint in the Right
Front Seat Position (Crew Cab) 1-54
Securing a Child Restraint in the
Right Front Seat Position (Regular
and Extended Cab) 1-56, 1-62
Top Strap 1-43
Top Strap Anchor Location 1-45
Where to Put the Restraint 1-42
Chime Level Adjustment 3-127
Cigarette Lighter 3-20
Cleaning
Aluminum or Chrome-Plated Wheels 5-117
Exterior Lamps/Lenses 5-116
Fabric/Carpet 5-113
Finish Care 5-116
Glass Surfaces 5-115
Instrument Panel 5-115
Interior Plastic Components 5-115
Leather 5-114
Tires 5-118
Underbody Maintenance 5-119
Vinyl 5-114
Washing Your Vehicle 5-116
Weatherstrips 5-115
Windshield and Wiper Blades 5-117
Climate Control System 3-21
Dual 3-22
Dual Automatic 3-25
Outlet Adjustment 3-30
Clutch, Hydraulic 5-34
Coinholder(s) 2-70
Comfort Guides, Rear Safety Belt 1-30
Content Theft-Deterrent 2-19
Control of a Vehicle 4-5
Coolant
Engine Temperature Gage 3-42
Heater, Engine 2-25
Surge Tank Pressure Cap 5-37

Coolant (cont.)
Cooling System 5-40
Cruise Control Lever 3-10
Cruise Control Light 3-48
Cupholder(s) 2-70
Customer Assistance Information
Courtesy Transportation 7-7
Customer Assistance for Text Telephone (TTY) Users 7-4
Customer Assistance Offices 7-4
Customer Satisfaction Procedure 7-2
GM Mobility Reimbursement Program 7-5
Reporting Safety Defects to General Motors 7-11
Reporting Safety Defects to the Canadian Government 7-11
Reporting Safety Defects to the United States Government 7-10
Roadside Assistance Program 7-5
Service Publications Ordering Information 7-11

D

Daytime Running Lamps 3-14
Defensive Driving 4-2
Delayed Locking 2-10
Doing Your Own Service Work 5-5
Dome Lamp Override 3-18
Dome Lamps 3-17
Door
Delayed Locking 2-10
Locks 2-8
Power Door Locks 2-9
Programmable Automatic Door Locks 2-10
Rear Door Security Locks 2-13
Rear Doors 2-14
Driver
Position, Safety Belt 1-16
Driver Information Center (DIC) 3-50
DIC Operation and Displays 3-51
DIC Vehicle Customization 3-63
DIC Warnings and Messages 3-54
Driving
At Night 4-35
City 4-39
Defensive 4-2
Drunken 4-2
Freeway 4-40
Hill and Mountain Roads 4-42
In Rain and on Wet Roads 4-36
Recovery Hooks 4-49
Rocking Your Vehicle to Get it Out 4-48
Winter 4-44
Dual Automatic Climate Control System 3-25
Dual Climate Control System 3-22
Dual Tire Operation 5-82
DVD
Rear Seat Entertainment System 3-111

E

Electrical System
- Add-On Equipment 5-121
- Center Instrument Panel Fuse Block 5-124
- Fuses and Circuit Breakers 5-122
- Instrument Panel Fuse Block 5-122
- Power Windows and Other Power Options 5-122
- Underhood Fuse Block 5-125
- Windshield Wiper Fuses 5-121

Engine
- Air Cleaner/Filter 5-25
- Battery 5-52
- Check and Service Engine Soon Light 3-44
- Coolant 5-35
- Coolant Heater 2-25
- Coolant Temperature Gage 3-42
- Engine Compartment Overview 5-14
- Exhaust 2-53
- Fan Noise 5-45
- Oil 5-20
- Overheated Protection Operating Mode 5-39
- Overheating 5-37
- Starting 2-23

Entry Lighting 3-18
Event Data Recorders (EDR) 7-9
Exit Lighting 3-18
Extender, Safety Belt 1-32

F

Filter
- Engine Air Cleaner 5-25

Finish Damage 5-118
Fixed Mast Antenna 3-127
Flash-to-Pass 3-9
Flat Tire 5-91
Flat Tire, Changing 5-92
Flat Tire, Storing 5-109

Fluid
- Automatic Transmission 5-27, 5-30
- Manual Transmission 5-33
- Power Steering 5-46
- Windshield Washer 5-48

Fog Lamps 3-16
Four-Wheel Drive 2-37, 5-58
Four-Wheel-Drive Light 3-48
Front Axle 5-60
Front Reading Lamps 3-18
Front Storage Area 2-71
Fuel 5-6
- Additives 5-7
- California Fuel 5-7
- E-85 (85% Ethanol) 5-8
- Filling a Portable Fuel Container 5-12
- Filling Your Tank 5-10
- Fuels in Foreign Countries 5-9
- Gage 3-49
- Gasoline Octane 5-6

Fuel (cont.)
Gasoline Specifications 5-7
Low Warning Light 3-50
Fuses
Center Instrument Panel Fuse Block 5-124
Fuses and Circuit Breakers 5-122
Instrument Panel Fuse Block 5-122
Underhood Fuse Block 5-125
Windshield Wiper 5-121

G

Gage
Engine Coolant Temperature 3-42
Fuel 3-49
Oil Pressure 3-47
Speedometer 3-33
Tachometer 3-33
Transmission Temperature 3-43
Voltmeter Gage 3-38
Garage Door Opener 2-66
Gasoline
Octane 5-6
Specifications 5-7
Glove Box 2-70
GM Mobility Reimbursement Program 7-5

H

Hazard Warning Flashers 3-6
Head Restraints 1-8
Headlamps 3-13, 5-63
Automatic Headlamp System 3-15
Bulb Replacement 5-62
Daytime Running Lamps 3-14
Flash-to-Pass 3-9
Front Turn Signal, Sidemarker and
Daytime Running Lamps 5-64
Halogen Bulbs 5-62
High/Low Beam Changer 3-9
On Reminder 3-14
Pickup Box Identification and Fender
Marker Lamps 5-69
Roof Marker Lamps 5-65
Heated Seats 1-5
Heater 3-21, 3-22
Heater 3-25
Highbeam On Light 3-48
Highway Hypnosis 4-42
Hill and Mountain Roads 4-42
HomeLink® Transmitter 2-66
HomeLink® Transmitter, Programming 2-67
Hood
Checking Things Under 5-12
Release 5-13

Horn 3-6
How to Use This Manual ii
How to Wear Safety Belts Properly 1-16
Hydraulic Clutch 5-34

I

Ignition Positions 2-22
Infants and Young Children, Restraints 1-35
Inflation -- Tire Pressure 5-79
Instrument Panel
  Brightness 3-17
  Cluster 3-32
  Overview 3-4

J

Jump Starting 5-53

K

Keyless Entry System 2-4
Keys 2-3

L

Labelling, Tire Sidewall 5-74
Lamps
  Auxiliary Roof Mounted Lamp 3-17
  Cargo 3-19
  Dome 3-17
  Dome Lamp Override 3-18
  Fog 3-16
  Front Reading 3-18
LATCH System
  Child Restraints 1-47
  Securing a Child Restraint Designed
    for the LATCH System 1-49
Latches, Seatback 1-8
Light
  Airbag Off 3-34
  Airbag Readiness 3-34
  Anti-Lock Brake System Warning 3-41
  Battery Warning 3-38
  Brake System Warning 3-39
  Cruise Control 3-48
  Four-Wheel-Drive 3-48
  Highbeam On 3-48
  Low Fuel Warning 3-50
  Malfunction Indicator 3-44
  Passenger Airbag Status Indicator 3-36
  Safety Belt Reminder 3-33
  Security 3-48
  Tow/Haul Mode 3-49

Light (cont.)
Traction Off 3-41
Up-Shift 3-39
Lighting
Entry 3-18
Exit 3-18
Locking Rear Axle 4-11
Lockout Protection 2-13
Locks
Delayed Locking 2-10
Door 2-8
Lockout Protection 2-13
Power Door 2-9
Programmable Automatic Door Locks 2-10
Rear Door Security Locks 2-13
Loss of Control 4-19
Low Fuel Warning Light 3-50
Lumbar
Power Controls 1-5

M

Maintenance Schedule
Additional Required Services 6-6
At Each Fuel Fill 6-11
At Least Once a Month 6-11
At Least Once a Year 6-12
At the First 100, 1,000 and 6,000 Miles (160, 1 600 and 10 000km) 6-11
Maintenance Schedule (cont.)
Introduction 6-2
Maintenance Footnotes 6-8
Maintenance Record 6-18
Maintenance Requirements 6-2
Normal Maintenance Replacement Parts 6-17
Owner Checks and Services 6-10
Recommended Fluids and Lubricants 6-14
Scheduled Maintenance 6-4
Using Your 6-2
Your Vehicle and the Environment 6-2
Malfunction Indicator Light 3-44
Manual Seats 1-3
Manual Selectable Ride 4-10
Manual Transmission
Fluid 5-33
Operation 2-32
Manual Windows 2-16
Memory Seat 2-74
Message
DIC Warnings and Messages 3-54
Mirrors
Automatic Dimming Rearview with Compass and Temperature Display 2-58
Automatic Dimming Rearview with OnStar®, Compass and Temperature Display 2-55
Manual Rearview Mirror 2-55
Outside Automatic Dimming Mirror 2-63
Outside Camper-Type Mirrors 2-61
Outside Convex Mirror 2-64

Mirrors (cont.)
Outside Curb View Assist Mirrors 2-63
Outside Heated Mirrors 2-64
Outside Manual Mirrors 2-60
Outside Power Camper-Type 2-62
Outside Power Foldaway Mirrors 2-62
Outside Power Mirrors 2-62
Outside West Coast-Type Mirrors 2-61
MyGMLink.com 7-3

N

New Vehicle Break-In 2-21
Noise Control System, Tampering 5-61
Normal Maintenance Replacement Parts 6-17

O

Odometer 3-33
Odometer, Trip 3-33
Off-Road Recovery 4-17
Oil
Engine 5-20
Pressure Gage 3-47
Older Children, Restraints 1-33
Online Owner Center 7-3
OnStar® System 2-64
Operating Your All-Wheel-Drive Vehicle
Off Paved Roads 4-20
Other Warning Devices 3-6
Outlet Adjustment 3-30
Outside
Automatic Dimming Mirror 2-63
Camper-Type Mirrors 2-61
Convex Mirror 2-64
Curb View Assist Mirrors 2-63
Heated Mirrors 2-64
Manual Mirrors 2-60
Power Foldaway Mirrors 2-62
Power Mirrors 2-62
West Coast-Type Mirrors 2-61
Outside Power Camper-Type Mirror 2-62
Overdrive Disable 3-49
Overheated Engine Protection Operating Mode 5-39
Owner Checks and Services 6-10
Owners, Canadian ii

P

Park (P)
Shifting Into 2-49
Shifting Out of 2-51
Parking
Brake 2-48
Over Things That Burn 2-52
Parking Your Vehicle 2-52
Passenger Airbag Status Indicator 3-36
Passenger Sensing System 1-76

Passing 4-17
Passlock® 2-21
Power
Accessory Outlets 3-19
Door Locks 2-9
Electrical System 5-122
Lumbar Controls 1-5
Retained Accessory (RAP) 2-23
Seat 1-4
Steering Fluid 5-46
Windows 2-17
Programmable Automatic Door Locks 2-10
Programming the HomeLink® Transmitter 2-67

Q

QUADRASTEER™ 4-14
Questions and Answers About Safety Belts 1-15

R

Radios 3-69
AM-FM Radio 3-70
Care of Your Cassette Tape Player 3-125
Care of Your CD and DVD Player 3-126
Care of Your CDs and DVDs 3-126
Radio with Cassette and CD 3-83
Radio with CD 3-73
Radio with Six-Disc CD 3-98
Radios (cont.)
Rear Seat Audio 3-122
Setting the Time for Radios with Radio Data Systems (RDS) 3-70
Setting the Time for Radios without Radio Data Systems (RDS) 3-69
Theft-Deterrent 3-123
Understanding Reception 3-125
Rear Axle 5-58
Locking 4-11
Rear Door Security Locks 2-13
Rear Doors 2-14
Rear Safety Belt Comfort Guides 1-30
Rear Seat Audio (RSA) 3-122
Rear Seat Entertainment System 3-111
Rear Seat Operation 1-9, 1-10
Rear Seat Passengers, Safety Belts 1-27
Rearview Mirror, Automatic Dimming with Compass and Temperature Display 2-58
Rearview Mirror, Automatic Dimming with OnStar®, Compass and Temperature Display 2-55
Rearview Mirrors 2-55
Reclining Seatbacks 1-6
Recommended Fluids and Lubricants 6-14
Recovery Hooks 4-49
Recreational Vehicle Towing 4-62
Remote Keyless Entry System 2-4
Remote Keyless Entry System, Operation 2-5
Removing the Flat Tire and Installing the Spare Tire 5-97

Removing the Spare Tire and Tools 5-93
Replacement Bulbs 5-71
Reporting Safety Defects
  Canadian Government 7-11
  General Motors 7-11
  United States Government 7-10
Restraint System Check
  Checking Your Restraint Systems 1-82
  Replacing Restraint System Parts
    After a Crash 1-82
Restraint Systems
  Checking 1-82
  Replacing Parts 1-82
Retained Accessory Power (RAP) 2-23
Right Front Passenger Position, Safety Belts 1-25
Roadside
  Assistance Program 7-5
Rocking Your Vehicle to Get it Out 4-48
Running Your Engine While You Are Parked 2-54

S

Safety Belt
  Reminder Light 3-33
Safety Belts
  Care of 5-115
  Center Passenger Position 1-25
  Driver Position 1-16
  How to Wear Safety Belts Properly 1-16
Safety Belts (cont.)
  Questions and Answers About Safety Belts 1-15
  Rear Safety Belt Comfort Guides for
    Children and Small Adults 1-30
  Rear Seat Passengers 1-27
  Right Front Passenger Position 1-25
  Safety Belt Extender 1-32
  Safety Belt Use During Pregnancy 1-25
  Safety Belts Are for Everyone 1-11
Safety Warnings and Symbols iii
Scheduled Maintenance 6-4
Seatback Latches 1-8
Seats
  Head Restraints 1-8
  Heated Seats 1-5
  Manual 1-3
  Memory 2-74
  Power Lumbar 1-5
  Power Seats 1-4
  Rear Seat Operation 1-9, 1-10
  Reclining Seatbacks 1-6
  Seatback Latches 1-8
Secondary Latch System 5-105
Securing a Child Restraint
  Center Front Seat Position 1-53
  Center Rear Seat Position 1-52
  Designed for the LATCH System 1-49
  Rear Outside Seat Position 1-50
  Right Front Seat Position (Crew Cab) 1-54

Securing a Child Restraint (cont.)
Right Front Seat Position (Regular and Extended Cab) 1-56, 1-62
Security Light 3-48
Service 5-4
Adding Equipment to the Outside of Your Vehicle 5-6
Doing Your Own Work 5-5
Engine Soon Light 3-44
Publications Ordering Information 7-11
Servicing Your Airbag-Equipped Vehicle 1-80
Setting the Time
Radios with Radio Data Systems (RDS) 3-70
Radios without Radio Data Systems (RDS) 3-69
Sheet Metal Damage 5-118
Shifting Into Park (P) 2-49
Shifting Out of Park (P) 2-51
Signals, Turn and Lane-Change 3-8
Sliding Rear Windows 2-18
Spare Tire 5-112
Installing 5-97
Removing 5-93
Storing 5-109
Specifications, Capacities 5-130
Speedometer 3-33
Starting Your Engine 2-23
Steering 4-12
Steering Wheel Controls, Audio 3-124
Steering Wheel, Tilt Wheel 3-7
Storage Areas
Center Console Storage Area 2-71
Coinholder(s) 2-70
Cupholder(s) 2-70
Front Storage Area 2-71
Glove Box 2-70
Stuck in Sand, Mud, Ice or Snow 4-48
Sun Visors 2-18
Sunroof 2-73
Swing-Out Windows 2-18

T

Tachometer 3-33
Tailgate 2-15
Taillamps 5-69
Theft-Deterrent, Radio 3-123
Theft-Deterrent Systems 2-19
Content Theft-Deterrent 2-19
Passlock® 2-21
Tilt Wheel 3-7
Tires 5-72
Aluminum or Chrome-Plated Wheels, Cleaning 5-117
Buying New Tires 5-86
Chains 5-90
Changing a Flat Tire 5-92
Cleaning 5-118
Dual Tire Operation 5-82
If a Tire Goes Flat 5-91

Tires (cont.)
Inflation -- Tire Pressure 5-79
Inspection and Rotation 5-83
Installing the Spare Tire 5-97
Removing the Flat Tire 5-97
Removing the Spare Tire and Tools 5-93
Secondary Latch System 5-105
Spare Tire 5-112
Storing a Flat or Spare Tire and Tools 5-109
Tire Sidewall Labelling 5-74
Tire Terminology and Definitions 5-77
Uniform Tire Quality Grading 5-87
Wheel Alignment and Tire Balance 5-88
Wheel Replacement 5-88
When It Is Time for New Tires 5-85
Tonneau Cover 2-71
Top Strap 1-43
Top Strap Anchor Location 1-45
Tow/Haul Mode 2-29
Tow/Haul Mode Light 3-49
Tow/Haul Mode, Overdrive Disable 3-49
Towing
Power Take-Off (PTO) 4-98
Recreational Vehicle 4-62
Towing a Trailer 4-68
Your Vehicle 4-62
Traction
Assist System (TAS) 4-8
Manual Selectable Ride 4-10
Off Light 3-41
Trailer
Recommendations 4-67
Transmission
Fluid, Automatic 5-27, 5-30
Fluid, Manual 5-33
Temperature Gage 3-43
Up-Shift Light 3-39
Transmission Operation, Automatic 2-26
Transmission Operation, Manual 2-32
Trip Odometer 3-33
Turn and Lane-Change Signals 3-8
Turn Signal/Multifunction Lever 3-7

U

Understanding Radio Reception 3-125
Uniform Tire Quality Grading 5-87
Up-Shift Light 3-39

V

Vehicle
Control 4-5
Damage Warnings iv
Parking Your 2-52
Symbols iv
Vehicle Customization, DIC 3-63
Vehicle Data Collection and Event
Data Recorders 7-9

Vehicle Identification
Number (VIN) 5-120
Service Parts Identification Label 5-121
Vehicle Personalization
Memory Seat 2-74
Ventilation Adjustment 3-30
Visors 2-18
Voltmeter Gage 3-38

W

Warning Lights, Gages and Indicators 3-31
Warnings
DIC Warnings and Messages 3-54
Hazard Warning Flashers 3-6
Other Warning Devices 3-6
Safety and Symbols iii
Vehicle Damage iv
Wheels
Alignment and Tire Balance 5-88
Replacement 5-88
Where to Put the Restraint 1-42
Windows 2-16
Manual 2-16
Power 2-17
Sliding Rear 2-18
Swing-Out Windows 2-18
Windshield
Wiper Blades, Cleaning 5-117
Windshield Washer 3-10
Fluid 5-48
Windshield Wiper
Blade Replacement 5-72
Fuses 5-121
Windshield Wipers 3-9
Winter Driving 4-44

X

XM™ Satellite Radio Antenna System 3-127

Y

Your Vehicle and the Environment 6-2