2019

Suburban Heavy-Duty Package

chevrolet.com (U.S.)
chevrolet.ca (Canada)

Contents

Introduction 2
Keys, Doors, and Windows 3
Instruments and Controls 4
Driving and Operating 5
Vehicle Care 13
Service and Maintenance 44
Technical Data 47
Index 50

Introduction

The names, logos, emblems, slogans, vehicle model names, and vehicle body designs appearing in this manual including, but not limited to, GM, the GM logo, CHEVROLET, the CHEVROLET Emblem, and SUBURBAN are trademarks and/or service marks of General Motors LLC, its subsidiaries, affiliates, or licensors.

For vehicles first sold in Canada, substitute the name “General Motors of Canada Company” for Chevrolet Motor Division wherever it appears in this manual.

This manual describes features that may or may not be on the vehicle because of optional equipment that was not purchased on the vehicle, model variants, country specifications, features/applications that may not be available in your region, or changes subsequent to the printing of this owner’s manual.

Refer to the purchase documentation relating to your specific vehicle to confirm the features.

Keep this manual in the vehicle for quick reference.

Canadian Vehicle Owners

A French language manual can be obtained from your dealer, at www.helminc.com, or from:

Propriétaires Canadiens

On peut obtenir un exemplaire de ce guide en français auprès du concessionnaire ou à l'adresse suivante:

Helm, Incorporated
Attention: Customer Service
47911 Halyard Drive
Plymouth, MI 48170
USA

Using this Supplement

This supplement contains information specific to the unique components of the vehicle. It does not explain everything you need to know about the vehicle. Read this supplement along with the owner’s manual to learn about the vehicle's features and controls.

Index

A good place to look for what you need is the Index in the back of this supplement. It is an alphabetical list of what is in the supplement, and the page number where you will find it.

Litho in U.S.A.
Part No. 84161712 A First Printing

©2018 General Motors LLC. All Rights Reserved.

Keys, Doors, and Windows

Exterior Mirrors
Mirrors 3

Exterior Mirrors

Mirrors

The passenger side mirror is flat and not convex.

Instruments and Controls

Warning Lights, Gauges, and Indicators

Lane Departure Warning (LDW) Light 4

Warning Lights, Gauges, and Indicators

Lane Departure Warning (LDW) Light

If equipped, this light comes on briefly while starting the vehicle. If it does not come on, have the vehicle serviced.

This light is green if LDW is on and ready to operate.

This light changes to amber and flashes to indicate that the lane marking has been crossed without using a turn signal in that direction.

See *Lane Departure Warning (LDW)* ⇨ *8*.

Driving and Operating

Driving Information
Steering 5

Starting and Operating
Starting the Engine 6

Driver Assistance Systems
Lane Departure Warning (LDW) 8

Trailer Towing
Trailer Towing 9

Driving Information

Steering

Hydraulic Power Steering

This vehicle has hydraulic power steering. It may require maintenance. See *Power Steering Fluid* ⇨ *22*.

If power steering assist is lost because the engine stops or because of a system malfunction, the vehicle can be steered but may require increased effort. See your dealer if there is a problem.

Caution
If the steering wheel is turned until it reaches the end of its travel, and is held in that position for more than 15 seconds, damage may occur to the power steering system and there may be loss of power steering assist.

Curve Tips

- Take curves at a reasonable speed.
- Reduce speed before entering a curve.
- Maintain a reasonable steady speed through the curve.
- Wait until the vehicle is out of the curve before accelerating gently into the straightaway.

Steering in Emergencies

- There are some situations when steering around a problem may be more effective than braking.
- Holding both sides of the steering wheel allows you to turn 180 degrees without removing a hand.
- Antilock Brake System (ABS) allows steering while braking.

Starting and Operating

Starting the Engine

Move the shift lever to P (Park) or N (Neutral). The engine will not start in any other position. To restart the engine when the vehicle is already moving, use N (Neutral) only.

Caution

Do not try to shift to P (Park) if the vehicle is moving. If you do, you could damage the transmission. Shift to P (Park) only when the vehicle is stopped.

Caution

If you add electrical parts or accessories, you could change the way the engine operates. Any resulting damage would not be covered by the vehicle warranty.

(Continued)

Caution (Continued)

See “Add-On Electrical Equipment” in the owner’s manual.

Caution

If the steering wheel is turned until it reaches the end of its travel, and is held in that position while starting the vehicle, damage may occur to the hydraulic power steering system and there may be loss of power steering assist.

Starting Procedure (Key Access)

1. With your foot off the accelerator pedal, turn the ignition key to START. When the engine starts, let go of the key. The idle speed will go down as the engine gets warm. Do not race the engine immediately after starting it.

   Operate the engine and transmission gently to allow the oil to warm up and lubricate all moving parts.

   When the low fuel warning light is on and the FUEL LEVEL LOW message is displayed in the Driver Information Center (DIC), hold the ignition switch in the START position to continue engine cranking.

Caution

Cranking the engine for long periods of time, by returning the ignition to the START position immediately after cranking has ended, can overheat and damage the cranking motor, and drain the battery. Wait at least 15 seconds between each try, to let the cranking motor cool down.

2. If the engine does not start after five to 10 seconds, especially in very cold weather (below −18 °C or 0 °F), it could be flooded with too much

gasoline. Try pushing the accelerator pedal all the way to the floor and holding it there while holding the key in START for up to 15 seconds. Wait at least 15 seconds between each try, to allow the cranking motor to cool down. When the engine starts, let go of the key and accelerator. If the vehicle starts briefly but then stops again, do the same thing. This clears the extra gasoline from the engine. Do not race the engine immediately after starting it. Operate the engine and transmission gently until the oil warms up and lubricates all moving parts.

Starting Procedure (Keyless Access)

1. With the Keyless Access system, the Remote Keyless Entry (RKE) transmitter must be in the vehicle. Press ENGINE START/STOP with the brake pedal applied. When the engine begins cranking, let go of the button. The idle speed will go down as the engine gets warm. Do not race the engine immediately after starting it.

   If the RKE transmitter is not in the vehicle, if there is interference, or if the RKE battery is low, the Driver Information Center (DIC) will display a message.

Caution
Cranking the engine for long periods of time, by returning the ignition to the START position immediately after cranking has ended, can overheat and damage the cranking motor, and drain the battery. Wait at least 15 seconds between each try, to let the cranking motor cool down.

2. If the engine does not start after five to 10 seconds, especially in very cold weather (below −18 °C or 0 °F), it could be flooded with too much gasoline. Try pushing the accelerator pedal all the way to the floor and holding it there as you press ENGINE START/STOP, for up to a maximum of 15 seconds. Wait at least 15 seconds between each try, to allow the cranking motor to cool down. When the engine starts, let go of the button and the accelerator. If the vehicle starts briefly but then stops again, do the same thing. This clears the extra gasoline from the engine. Do not race the engine immediately after starting it. Operate the engine and transmission gently until the oil warms up and lubricates all moving parts.

Driver Assistance Systems

Lane Departure Warning (LDW)

If equipped, LDW may help avoid crashes due to unintentional lane departures. It may provide an alert if the vehicle is crossing a lane without using a turn signal in that direction. LDW uses a camera sensor to detect the lane markings at speeds of 56 km/h (35 mph) or greater.

⚠ Warning

The LDW system does not steer the vehicle. The LDW system may not:

- Provide enough time to avoid a crash.
- Detect lane markings under poor weather or visibility conditions. This can occur if

(Continued)

Warning (Continued)

the windshield or headlamps are blocked by dirt, snow, or ice; if they are not in proper condition; or if the sun shines directly into the camera.

- Detect road edges.
- Detect lanes on winding or hilly roads.

If LDW only detects lane markings on one side of the road, it will only warn you when departing the lane on the side where it has detected a lane marking. Always keep your attention on the road and maintain proper vehicle position within the lane, or vehicle damage, injury, or death could occur. Always keep the windshield, headlamps, and camera sensors clean and in good repair. Do not use LDW in bad weather conditions.

How the System Works

The LDW camera sensor is on the windshield ahead of the rearview mirror.

To turn LDW on and off, press to the left of the steering wheel. The control indicator will light when LDW is on.

When LDW is on, is green if LDW is available to warn of a lane departure. If the vehicle crosses a detected lane marking without using the turn signal in that direction, changes to amber and flashes. Additionally, there will be three beeps, or the driver seat will pulse three times, on the right or left, depending on the lane departure direction.

When the System Does Not Seem to Work Properly

The system may not detect lanes as well when there are:

- Close vehicles ahead.
- Sudden lighting changes, such as when driving through tunnels.
- Banked roads.

If the LDW system is not functioning properly when lane markings are clearly visible, cleaning the windshield may help.

LDW alerts may occur due to tar marks, shadows, cracks in the road, temporary or construction lane markings, or other road imperfections. This is normal system operation; the vehicle does not need service. Turn LDW off if these conditions continue.

Trailer Towing

Do not tow a trailer during break-in. See "New Vehicle Break-In" in the owner's manual.

⚠ Warning

The driver can lose control when pulling a trailer if the correct equipment is not used or the vehicle is not driven properly. For example, if the trailer is too heavy, the brakes may not work well — or even at all. The driver and passengers could be seriously injured. The vehicle may also be damaged; the resulting repairs would not be covered by the vehicle warranty. Pull a trailer only if all the steps in this section have been followed. Ask your dealer for advice and information about towing a trailer with the vehicle.

Caution

Pulling a trailer improperly can damage the vehicle and result in costly repairs not covered by the vehicle warranty. To pull a trailer correctly, follow the advice in this section and see your dealer for important information about towing a trailer with the vehicle.

To identify the trailering capacity of the vehicle, read the information in "Weight of the Trailer" following.

Trailering is different than just driving the vehicle by itself. Trailering means changes in handling, acceleration, braking, durability, and fuel economy. Successful, safe trailering takes correct equipment, and it has to be used properly.

The following information has many time-tested, important trailering tips and safety rules. Many of these are important for your safety and that of your passengers. Read this section carefully before pulling a trailer.

Weight of the Trailer

How heavy can a trailer safely be?

It depends on how the rig is used. Speed, altitude, road grades, outside temperature, and how much the vehicle is used to pull a trailer are all important. It can depend on any special equipment on the vehicle, and the amount of tongue weight the vehicle can carry. See “Weight of the Trailer Tongue” later in this section.

Trailer Weight Rating (TWR) is calculated assuming the tow vehicle has only the driver and all required trailering equipment. Weight of additional optional equipment, passengers, and cargo in the tow vehicle must be subtracted from the trailer weight rating.

Use the following chart to determine the maximum the trailer can weigh, based upon the vehicle model and options.

Vehicle	Axle Ratio	Maximum Trailer Weight	GCWR*
3500 Series 4WD Long Wheelbase HD SUV			
6.0L V8	4.10	1 360 kg (3,000 lb)	5 761 kg (12,700 lb)
*The Gross Combination Weight Rating (GCWR) is the total allowable weight of the completely loaded vehicle and trailer including any passengers, cargo, equipment, and conversions. The GCWR for the vehicle should not be exceeded.			

Ask your dealer for trailering information or advice.

Weight of the Trailer Tongue

The tongue load (1) of any trailer is very important because it is also part of the vehicle weight. The Gross Vehicle Weight (GVW) includes the curb weight of the vehicle, any cargo carried in it, and the people who will be riding in the vehicle as well as trailer tongue weight. Vehicle options, equipment, passengers, and cargo in the vehicle reduce the amount of tongue weight the vehicle can carry, which will also reduce the trailer weight the vehicle can tow. See the owner's manual for more information about the vehicle's maximum load capacity.

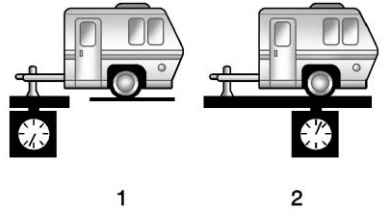

In general, trailer tongue weight (1) should be 10–15 % of the loaded trailer weight (2). Some specific trailer types (especially boat trailers) fall outside of this range. In this case, the recommended tongue weight in the trailer owner's manual should be observed. In all cases, the maximum loads for the vehicle series and hitch type should not be exceeded.

Vehicle Series	Hitch Type	Maximum Tongue Weight
3500	Weight Carrying	136 kg (300 lb)

Do not exceed the maximum allowable tongue weight for the vehicle. Choose the shortest hitch extension that will position the hitch ball closest to the vehicle. This will help reduce the effect of trailer tongue weight on the rear axle.

Trailer rating may be limited by the vehicle's ability to carry tongue weight. Tongue weight cannot cause the vehicle to exceed the Gross Vehicle Weight Rating (GVWR) or the Rear Gross Axle Weight Rating (RGAWR). See “Total Weight on the Vehicle's Tires” following.

After loading the trailer, weigh the trailer and then the tongue, separately, to see if the weights are proper. If they are not, adjustments might be made by moving some items around in the trailer.

If a cargo carrier is used in the trailer hitch receiver, choose a carrier that positions the load as close to the vehicle as possible. Make sure the total weight, including the carrier, is no more than half of the maximum allowable tongue weight for the vehicle or 227 kg (500 lb), whichever is less.

Total Weight on the Vehicle's Tires

Be sure the vehicle's tires are inflated to the inflation pressures found on the Certification label on the center pillar or see "Vehicle Load Limits" in the owner’s manual. Make sure not to exceed the GVWR limit for the vehicle, or the RGAWR, with the tow vehicle and trailer fully loaded for the trip including the weight of the trailer tongue. If using a weight-distributing hitch, make sure not to exceed the RGAWR before applying the weight distribution spring bars.

Weight of the Trailering Combination

It is important that the combination of the tow vehicle and trailer does not exceed any of its weight ratings — GCWR, GVWR, RGAWR, Trailer Weight Rating, or Tongue Weight. The only way to be sure it is not exceeding any of these ratings is to weigh the tow vehicle and trailer combination, fully loaded for the trip, getting individual weights for each of these items.

Vehicle Care

General Information
California Proposition 65 Warning 13

Vehicle Checks
Engine Compartment Overview 14
Engine Oil 15
Automatic Transmission Fluid 17
Engine Air Cleaner/Filter 18
Cooling System 18
Engine Overheating 21
Power Steering Fluid 22
Battery - North America 23
Front Axle 24
Rear Axle 24
Noise Control System 25

Electrical System
Instrument Panel Fuse Block 26

Wheels and Tires
Tire Changing 29

Jump Starting
Jump Starting - North America 38

Towing the Vehicle
Towing the Vehicle 42
Recreational Vehicle Towing . . . 42

Appearance Care
Exterior Care 43

General Information

California Proposition 65 Warning

⚠ Warning

Most motor vehicles, including this one, as well as many of its service parts and fluids, contain and/or emit chemicals known to the State of California to cause cancer and birth defects or other reproductive harm. Engine exhaust, many parts and systems, many fluids, and some component wear by-products contain and/or emit these chemicals. For more information go to www.P65Warnings.ca.gov/passenger-vehicle.

See *Battery - North America* ⇨ *23* and *Jump Starting - North America* ⇨ *38* and the back cover.

Vehicle Checks

Engine Compartment Overview

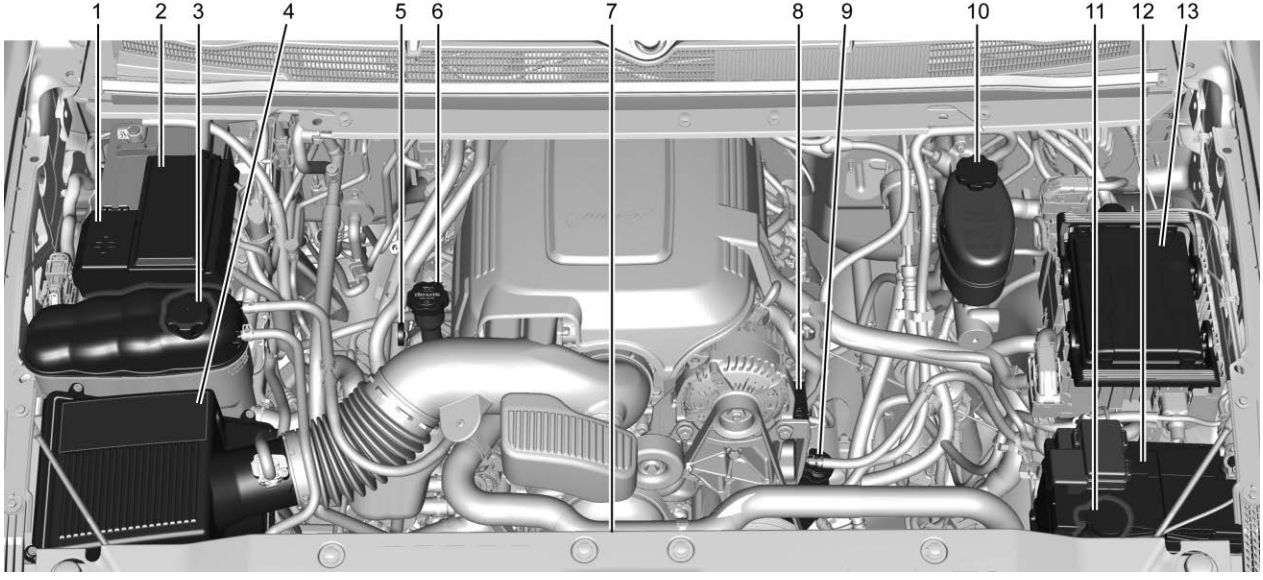

1. Battery Positive (+) Terminal (Under Cover)
2. Battery
3. Coolant Surge Tank and Pressure Cap
4. Engine Air Cleaner/Filter
5. Engine Oil Dipstick
6. Engine Oil Fill Cap
7. Engine Cooling Fan (Out of View)
8. Remote Negative (–) Location
9. Power Steering Fluid Reservoir
10. Brake Fluid Reservoir
11. Windshield Washer Fluid Reservoir
12. Auxiliary Battery
13. Engine Compartment Fuse Block.

Engine Oil

To ensure proper engine performance and long life, careful attention must be paid to engine oil. Following these simple, but important steps will help protect your investment:

- Use engine oil approved to the proper specification and of the proper viscosity grade. See “Selecting the Right Engine Oil” later in this section.
- Check the engine oil level regularly and maintain the proper oil level. See “Checking Engine Oil” and “When to Add Engine Oil” following.
- Change the engine oil at the appropriate time. See “Engine Oil Life System” in the owner’s manual.
- Always dispose of engine oil properly. See “What to Do with Used Oil” later in this section.

Checking Engine Oil

Check the engine oil level regularly, every 650 km (400 mi), especially prior to a long trip. The engine oil dipstick handle is a loop. See *Engine Compartment Overview* ⇨ *14* for the location.

⚠ Warning

The engine oil dipstick handle may be hot; it could burn you. Use a towel or glove to touch the dipstick handle.

If a low oil Driver Information Center (DIC) message displays, check the oil level.

Follow these guidelines:

- To get an accurate reading, park the vehicle on level ground. Check the engine oil level after the engine has been off for at least two hours. Checking the engine oil level on steep grades or too soon after engine shutoff can result in incorrect readings. Accuracy improves when checking a cold engine prior to starting. Remove the dipstick and check the level.
- If unable to wait two hours, the engine must be off for at least 15 minutes if the engine is warm, or at least 30 minutes if

the engine is not warm. Pull out the dipstick, wipe it with a clean paper towel or cloth, then push it back in all the way. Remove it again, keeping the tip down, and check the level.

When to Add Engine Oil

If the oil is below the cross-hatched area at the tip of the dipstick and the engine has been off for at least 15 minutes, add 1 L (1 qt) of the recommended oil and then recheck the level. See “Selecting the Right Engine Oil” later in this section for an explanation of what kind of oil to use. For engine oil crankcase capacity, see *Capacities and Specifications* ⇨ *48*.

Caution

Do not add too much oil. Oil levels above or below the acceptable operating range shown on the dipstick are harmful to the engine. If you find that you have an oil level above the operating range, i.e., the engine has so much oil that the oil level gets above the cross-hatched area that shows the proper operating range, the engine could be damaged. You should drain out the excess oil or limit driving of the vehicle and seek a service professional to remove the excess amount of oil.

See *Engine Compartment Overview* ⇨ *14* for the location of the engine oil fill cap.

Add enough oil to put the level somewhere in the proper operating range. Push the dipstick all the way back in when through.

Selecting the Right Engine Oil

Selecting the right engine oil depends on both the proper oil specification and viscosity grade.

Specification

Use full synthetic engine oils that meet the dexos1 specification.

Engine oils that have been approved by GM as meeting the dexos1 specification are marked with the dexos1 approved logo. See www.gmdexos.com.

Caution

Failure to use the recommended engine oil or equivalent can result in engine damage not covered by the vehicle warranty.

Viscosity Grade

Use SAE 5W-30 viscosity grade engine oil. Cold Temperature Operation: In an area of extreme cold, where the temperature falls below −29 °C (−20 °F), an SAE 0W-30 oil may be used. An oil of this viscosity grade will provide easier cold starting for the engine at extremely low temperatures.

When selecting an oil of the appropriate viscosity grade, it is recommended to select an oil of the correct specification. See “Specification” earlier in this section.

Engine Oil Additives/Engine Oil Flushes

Do not add anything to the oil. The recommended oils meeting the dexos1 specification are all that is needed for good performance and engine protection.

Engine oil system flushes are not recommended and could cause engine damage not covered by the vehicle warranty.

What to Do with Used Oil

Used engine oil contains certain elements that can be unhealthy for your skin and could even cause cancer. Do not let used oil stay on your skin for very long. Clean your skin and nails with soap and water, or a good hand cleaner. Wash or properly dispose of clothing or rags containing used engine oil. See the manufacturer's warnings about the use and disposal of oil products.

Used oil can be a threat to the environment. If you change your own oil, be sure to drain all the oil from the filter before disposal. Never dispose of oil by putting it in the trash or by pouring it on the ground, into sewers, or into streams or bodies of water. Recycle it by taking it to a place that collects used oil.

Automatic Transmission Fluid

When to Check and Change Automatic Transmission Fluid

It is usually not necessary to check the transmission fluid level. The only reason for fluid loss is a transmission leak or overheated transmission. This vehicle is not equipped with a transmission fluid level dipstick. There is a special procedure for checking and changing the transmission fluid in these vehicles. Because this procedure is difficult, this should be done at the dealer. Contact your dealer for additional information. The procedure can be found in the service manual. See “Service Publications Ordering Information” in the owner’s manual.

Caution

Use of the incorrect automatic transmission fluid may damage the vehicle, and the damage may not be covered by the vehicle warranty. See “Recommended Fluids and Lubricants” in the owner’s manual.

Change the fluid and filter at the scheduled maintenance intervals listed in the Maintenance Schedule in the owner’s manual. Be sure to use the correct transmission fluid. See “Recommended Fluids and Lubricants” in the owner’s manual.

Engine Air Cleaner/Filter

See “Engine Air Cleaner/Filter” in the owner’s manual.

Cooling System

The cooling system allows the engine to maintain the correct working temperature.

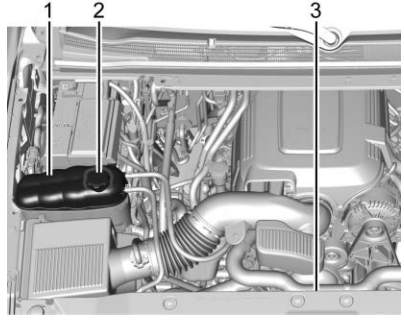

1. Coolant Surge Tank
2. Coolant Surge Tank Pressure Cap
3. Engine Cooling Fan (Out of View)

⚠ Warning

An underhood electric fan can start up even when the engine is not running and can cause injury. Keep hands, clothing, and tools away from any underhood electric fan.

⚠ Warning

Do not touch heater or radiator hoses, or other engine parts. They can be very hot and can burn you. Do not run the engine if there is a leak; all coolant could leak out. That could cause an engine fire and can burn you. Fix any leak before driving the vehicle.

Engine Coolant

The cooling system in the vehicle is filled with DEX-COOL engine coolant. This coolant is designed to remain in the vehicle for 5 years or 240 000 km (150,000 mi), whichever occurs first.

The following explains the cooling system and how to check and add coolant when it is low. If there is a problem with engine overheating, see *Engine Overheating* ⇨ *21*.

What to Use

⚠ Warning

Plain water, or other liquids such as alcohol, can boil before the proper coolant mixture will. With plain water or the wrong mixture, the engine could get too hot but there would not be an overheat warning. The engine could catch fire and you or others could be burned.

Use a 50/50 mixture of clean, drinkable water and DEX-COOL coolant. This mixture:

- Gives freezing protection down to −37 °C (−34 °F), outside temperature
- Gives boiling protection up to 129 °C (265 °F), engine temperature
- Protects against rust and corrosion
- Will not damage aluminum parts
- Helps keep the proper engine temperature

Caution

Do not use anything other than a mix of DEX-COOL coolant that meets GM Standard GMW3420 and clean, drinkable water. Anything else can cause damage to the engine cooling system and the vehicle, which would not be covered by the vehicle warranty.

Never dispose of engine coolant by putting it in the trash, or by pouring it on the ground, or into sewers, streams, or bodies of water. Have the coolant changed by an authorized service center, familiar with legal requirements regarding used coolant disposal. This will help protect the environment and your health.

Checking Coolant

The coolant surge tank is in the engine compartment on the passenger side of the vehicle. See *Engine Compartment Overview* ⇨ *14*.

The vehicle must be on a level surface when checking the coolant level.

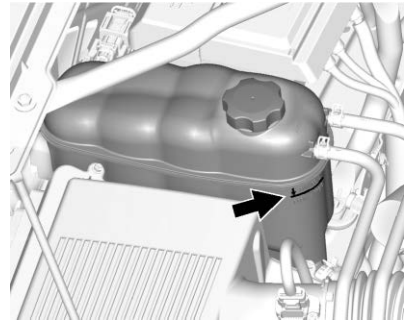

Check to see if coolant is visible in the coolant surge tank. If the coolant inside the coolant surge tank is boiling, wait until it cools down. The coolant level should be at or above

the full cold mark. If it is not, there may be a leak in the cooling system.

If coolant is visible but the coolant level is not at or above the full cold mark, see “How to Add Coolant to the Coolant Surge Tank” following.

How to Add Coolant to the Coolant Surge Tank

⚠ Warning

Spilling coolant on hot engine parts can burn you. Coolant contains ethylene glycol and it will burn if the engine parts are hot enough.

⚠ Warning

Plain water, or other liquids such as alcohol, can boil before the proper coolant mixture will. With plain water or the wrong mixture, the engine could get too hot but

(Continued)

Warning (Continued)

there would not be an overheat warning. The engine could catch fire and you or others could be burned.

⚠ Warning

Steam and scalding liquids from a hot cooling system are under pressure. Turning the pressure cap, even a little, can cause them to come out at high speed and you could be burned. Never turn the cap when the cooling system, including the pressure cap, is hot. Wait for the cooling system and pressure cap to cool.

Caution

Failure to follow the specific coolant fill procedure could cause the engine to overheat and could cause system damage. If coolant is not visible in the surge tank, contact your dealer.

If no coolant is visible in the surge tank, add coolant.

1. Remove the coolant surge tank pressure cap when the cooling system, including the coolant surge tank pressure cap and upper radiator hose, is no longer hot.

Turn the pressure cap slowly counterclockwise about one full turn. If a hiss is heard, wait for that to stop. A hiss means there is still some pressure left.

2. Keep turning the pressure cap slowly, and remove it.

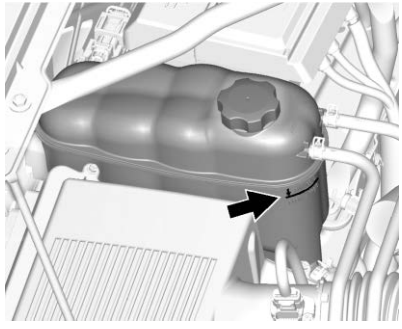

3. Fill the coolant surge tank with the proper mixture to the full cold mark.
4. With the coolant surge tank pressure cap off, start the engine and let it run until the engine coolant temperature gauge indicates approximately 90 °C (195 °F). By this time, the coolant level inside the coolant surge tank may be lower. If the level is lower, add more of the proper mixture to the coolant surge tank until the level reaches the full cold mark.
5. Replace the pressure cap tightly.
6. Verify coolant level after the engine is shut off and the coolant is cold. If necessary, repeat Steps 1–6.

Caution

If the pressure cap is not tightly installed, coolant loss and engine damage may occur. Be sure the cap is properly and tightly secured.

Engine Overheating

There is an engine coolant temperature gauge on the instrument cluster. See the owner's manual.

If Steam Is Coming from the Engine Compartment

⚠ Warning

Steam and scalding liquids from a hot cooling system are under pressure. Turning the pressure cap, even a little, can cause them to come out at high speed and you could be burned. Never turn the cap when the cooling system, including the pressure cap, is hot. Wait for the cooling system and pressure cap to cool.

Caution

Do not run the engine if there is a leak in the engine cooling system. This can cause a loss of all coolant and can damage the system and vehicle. Have any leaks fixed right away.

If No Steam Is Coming from the Engine Compartment

A Driver Information Center (DIC) message, along with a low coolant condition, can indicate a serious problem.

If there is an engine overheat warning and the vehicle does not have a low coolant condition, and no steam is heard or seen, the problem may not be too serious. Sometimes the engine can get a little too hot when the vehicle:

- Climbs a long hill on a hot day
- Stops after high-speed driving
- Idles for long periods in traffic
- Tows a trailer. See *Trailer Towing* ⇨ *9*

If the DIC message comes on with no sign of steam, try this for a minute or so:

1. In heavy traffic, let the engine idle in N (Neutral) while stopped. If it is safe to do so, pull off the road, shift to P (Park) or N (Neutral), and let the engine idle.
2. Turn on the heater to full hot at the highest fan speed and open the window as necessary.

If the vehicle no longer has the overheat warning, the vehicle can be driven. Just to be safe, drive slower for about 10 minutes. If the warning does not come back on, drive normally and have the cooling system checked for proper fill and function.

If the warning continues, pull over, stop, and park the vehicle right away.

If there is still no sign of steam and the vehicle is equipped with an engine driven cooling fan, push down the accelerator until the engine speed is about twice as fast as normal idle speed for at least five minutes while the vehicle is parked. If the warning is still there, turn off the engine and get everyone out of the vehicle until it cools down.

The decision may be made not to lift the hood, but to get service help right away.

Power Steering Fluid

See *Engine Compartment Overview* ⇨ *14* for reservoir location.

When to Check Power Steering Fluid

It is not necessary to regularly check power steering fluid unless there is a leak suspected in the system or an unusual noise is heard. A fluid loss in this system could indicate a problem. Have the system inspected and repaired.

Wait for the power steering system to cool, with the engine off, before checking the fluid.

How to Check Power Steering Fluid

To check the power steering fluid:

1. Turn the ignition off and let the engine compartment cool down.
2. Wipe the cap and the top of the reservoir clean.
3. Unscrew the cap and wipe the dipstick with a clean rag.
4. Replace the cap and completely tighten it.
5. Remove the cap again and look at the fluid level on the dipstick.

The level should be between the ADD and FULL marks. If necessary, add only enough fluid to bring the level up to the hashed area between the ADD and FULL marks.

What to Use

To determine what kind of fluid to use, see *Recommended Fluids and Lubricants* ⇨ *46*. Always use the proper fluid.

Caution

Use of the incorrect fluid may damage the vehicle and the damages may not be covered by the vehicle warranty. Always use the correct fluid listed in *Recommended Fluids and Lubricants* ⇨ *46*.

Battery - North America

The original equipment battery is maintenance free. Do not remove the cap and do not add fluid.

Refer to the replacement number shown on the original battery label when a new battery is needed. See *Engine Compartment Overview* ⇨ *14* for battery location.

⚠ Warning

WARNING: Battery posts, terminals, and related accessories contain lead and lead

(Continued)

Warning (Continued)

compounds, chemicals known to the State of California to cause cancer and birth defects or other reproductive harm. Batteries also contain other chemicals known to the State of California to cause cancer. **WASH HANDS AFTER HANDLING.** For more information go to www.P65Warnings.ca.gov/passenger-vehicle.

See *California Proposition 65 Warning* ⇨ *13* and the back cover.

Vehicle Storage

⚠ Warning

Batteries have acid that can burn you and gas that can explode. You can be badly hurt if you are not careful. See *Jump Starting - North America* ⇨ *38* for tips on working around a battery without getting hurt.

Infrequent Usage: Remove the black, negative (−) cable from the battery to keep the battery from running down.

Extended Storage: Remove the black, negative (−) cable from the battery or use a battery trickle charger.

Front Axle

When to Check and Change Lubricant

It is not necessary to regularly check front axle fluid unless a leak is suspected, or an unusual noise is heard. A fluid loss could indicate a problem. Have it inspected and repaired.

How to Check Lubricant

To get an accurate reading, the vehicle should be on a level surface.

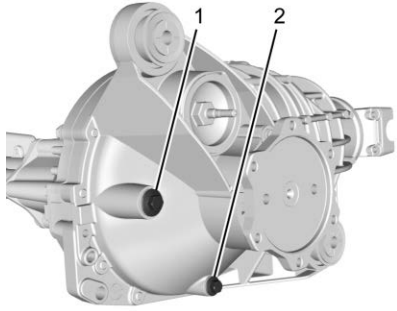

1. Fill Plug
2. Drain Plug

- When the differential is cold, add enough lubricant to raise the level from 0 mm (0 in) to 3.2 mm (1/8 in) below the fill plug (1) hole.
- When the differential is at operating temperature (warm), add enough lubricant to raise the level to the bottom of the fill plug (1) hole.

What to Use

Refer to *Recommended Fluids and Lubricants* ⇨ *46* to determine what kind of lubricant to use.

Rear Axle

When to Check Lubricant

It is not necessary to regularly check rear axle fluid unless a leak is suspected or an unusual noise is heard. A fluid loss could indicate a problem. Have it inspected and repaired.

All axle assemblies are filled by volume of fluid during production. They are not filled to reach a certain level. When checking the fluid level on any axle, variations in the readings can be caused by factory fill differences between the minimum and the maximum fluid volume. Also, if a vehicle has just been driven before checking the fluid level, it may appear lower than normal because fluid has traveled out along the axle tubes and has not drained back to the sump area. Therefore, a reading taken

five minutes after the vehicle has been driven will appear to have a lower fluid level than a vehicle that has been stationary for an hour or two. The rear axle assembly must be supported on a flat, level surface to get a true reading.

How to Check Lubricant

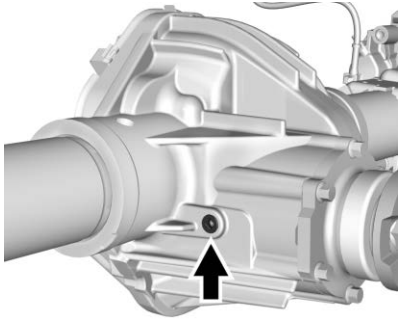

To get an accurate reading, the vehicle should be on a level surface.

The proper level is from 0 mm to 10 mm (0 to 0.4 in) below the bottom of the fill plug hole, located on the rear axle. Add only enough fluid to reach the proper level.

What to Use

Refer to *Recommended Fluids and Lubricants* ⇨ *46* to determine what kind of lubricant to use.

Noise Control System

Noise Emissions Warranty

General Motors warrants to the first person who purchases this vehicle for purposes other than resale and to each subsequent purchaser that this vehicle as manufactured by General Motors, was designed, built and equipped to conform at the time it left General Motors's control with all applicable U.S. EPA Noise Control Regulations. This warranty covers this vehicle as designed, built and equipped by General Motors, and is not limited to any particular part, component or system of the vehicle manufactured by General Motors. Defects in design, assembly or in any part, component or system of the vehicle as manufactured by General Motors, which, at the time it left General Motors's control, caused noise emissions to exceed Federal standards, are covered by this warranty for the life of the vehicle.

The following information relates to compliance with federal noise emission standards for vehicles with a Gross Vehicle Weight Rating (GVWR) of more than 4 536 kg (10,000 lb). The Maintenance Schedule provides information on maintaining the noise control system to minimize degradation of the noise emission control system during the life of the vehicle. The noise control system warranty is given in the warranty manual.

These standards apply only to vehicles sold in the United States.

TAMPERING WITH NOISE CONTROL SYSTEM PROHIBITED

Federal law prohibits the following acts or the causing thereof:

1. The removal or rendering inoperative by any person, other than for purposes of maintenance, repair, or replacement, of any device or element of design incorporated into any new vehicle for the purpose of noise control prior to its sale or delivery to the ultimate purchaser or while it is in use; or
2. The use of the vehicle after such device or element of design has been removed or rendered inoperative by any person.

Among those acts presumed to constitute tampering are the acts listed below.

Insulation:

Removal of the noise shields or any underhood insulation.

Engine:

Removal or rendering the engine speed governor, if equipped, inoperative so as to allow engine speed to exceed manufacturer specifications.

Fan and Drive:

- Removal of the fan clutch, if equipped, or rendering the clutch inoperative.
- Removal of the fan shroud, if equipped.

Air Intake:

- Removal of the air cleaner silencer.
- Modification of the air cleaner.

Exhaust:

- Removal of the muffler and/or resonator.
- Removal of the exhaust pipes and exhaust pipe clamps.

Electrical System

Instrument Panel Fuse Block

Instrument Panel Electrical Center (IECM) Connector X7

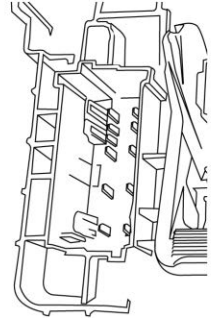

The vehicle has standard wiring provisions for connecting 12-volt battery power to customer-installed equipment.

The standard upfitter provisions are terminated in the Instrument Panel Electrical Center (IECM) connector X7. The IECM is located in the lower instrument panel to the left of the brake pedal assembly. The following circuits are terminated in IECM connector X7:

- Terminal 8 - Battery power, hot in ignition RUN/ACCESSORY
- Terminal 11 - Battery power, hot in ignition RUN/CRANK
- Terminals 7 and 17 - Primary battery power. Maximum load for each circuit must not exceed 15 amps
- Terminal 10 - Ground
- Terminal 19 - Vehicle Speed Signal (VSS) provides 4000 pulses per mile

The vehicle Electronic Brake Control Module (EBCM) VSS output circuitry does not include a logic pull-up resistance. If a pull-up resistance is not part of the customer equipment VSS input connection circuitry, a 5000 ohm resistor can be connected between the vehicle VSS circuit wire and vehicle battery power.

A 12-volt auxiliary battery is included as standard equipment and is at the left front of the engine compartment. Customer connection to the auxiliary battery must be made at the fuse assembly located on the battery positive post.

Connection to the circuits in IECM X7 must be made by a customer-provided jumper harness consisting of a connector and appropriately sized wires. The mating connector for IECM cavity X7 is GM service part 19328970 (OEM 19324036). Refer to the wiring diagrams in this Specification for more information and to GM Upfitter Bulletin 115.

A complete harness for connection to IECM X7 is available. See www.gmupfitter.com.

1FL1500 and 3500HD Wiring Provisions Ignition Power and Signal Circuits

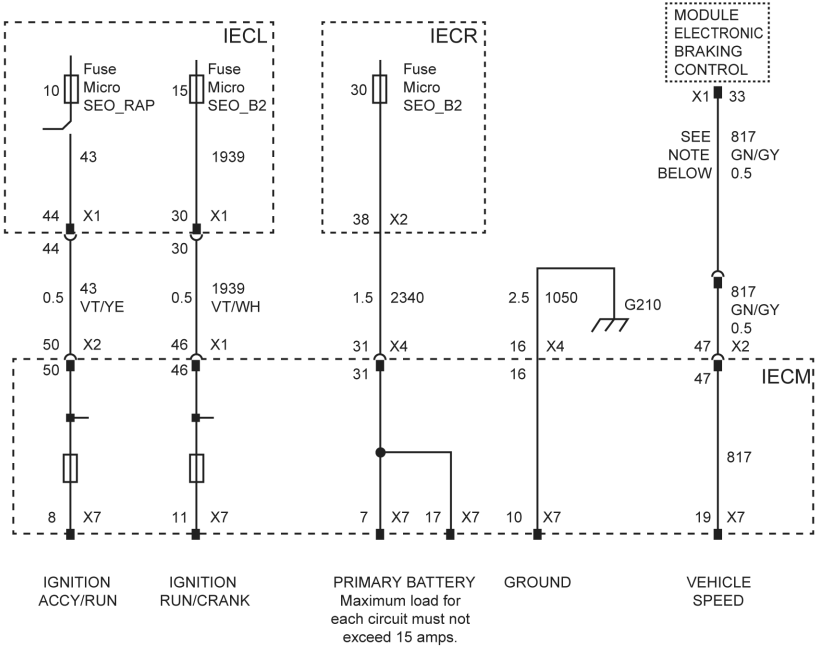

- IECL: Instrument Panel Electrical Center-LEFT
- IECR: Instrument Panel Electrical Center-RIGHT
- IECM: Instrument Panel Electrical Center-MID

The X7 connector for upfitting is not included in the IECM. A customer provided jumper harness for connection to IECM connector X7 is available, see www.gmupfitter.com. Also see GM Upfitter Bulletins 110 and 115.

The vehicle Electronic Brake Control Module Vehicle Speed Signal output circuitry does not include a logic pull-up resistance. If a pull-up resistance is not part of the customer equipment VSS input connection circuitry, a 5000 ohm resistor can be connected between the vehicle VSS circuit wire and vehicle battery power.

Wheels and Tires

Tire Changing

Removing the Spare Tire and Tools

The equipment needed to change a flat tire is stored in the rear of the vehicle, on the driver side, behind a door in the trim panel.

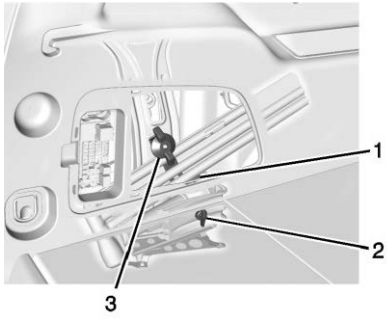

1. Jack Knob
2. Wing Nut Retaining the Wheel Blocks
3. Wing Nut Retaining the Tool Bag

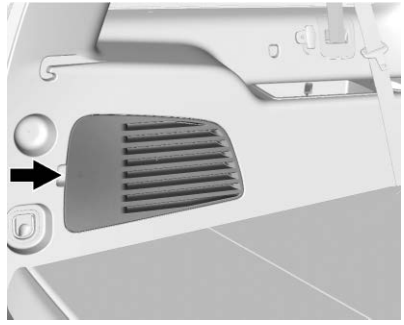

1. Pull to open the trim panel door.

   The third row driver side seat may need to be folded to access the trim panel door.
2. Lift the acoustic pad to access the jack and tools.
3. Turn the wing nut retaining the tool bag counterclockwise to remove it.

   Pull the tool bag toward the front of the vehicle and lift the rear portion of the bag upward to remove it.
4. Turn the jack knob counterclockwise to release the jack and wheel blocks from the bracket.
5. Turn the wing nut retaining the wheel blocks counterclockwise to remove the wheel blocks and the wheel block retainer.

Use the following tools:

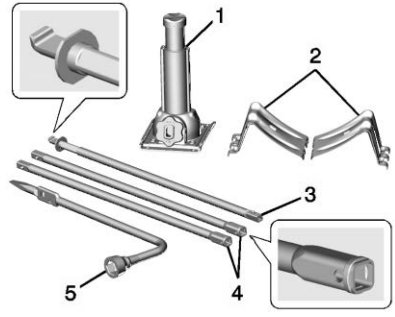

1. Jack
2. Wheel Blocks
3. Jack Handle
4. Jack Handle Extensions
5. Wheel Wrench

To access the spare tire, refer to the following graphics and instructions:

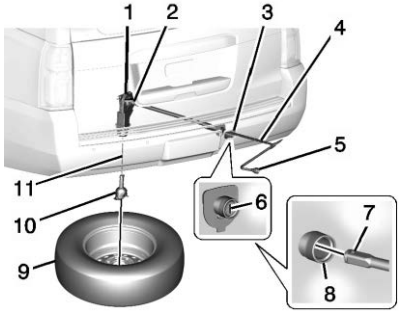

1. Hoist Assembly
2. Hoist Shaft
3. Hoist Shaft Access Cover/Hole
4. Jack Handle Extensions
5. Wheel Wrench
6. Spare Tire Lock
7. Hoist End of Extension Tool
8. Hoist Shaft Access Hole
9. Spare Tire (Valve Stem Pointed Down)
10. Tire/Wheel Retainer
11. Hoist Cable

1. Open the hoist shaft access cover (3) on the bumper to access the spare tire lock (6).

If equipped with a hitch cover, turn the hitch cover retainers counterclockwise and pull the cover downward to remove it before removing the hoist shaft access cover.

2. To remove the spare tire lock (6), insert the vehicle key, turn it clockwise, and then pull it straight out.

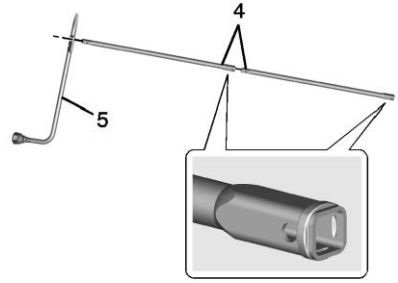

3. Assemble the two jack handle extensions (4) and wheel wrench (5), as shown.

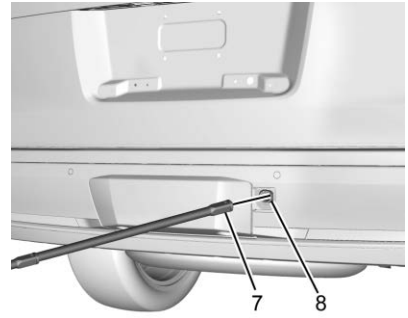

4. Insert the open end of the extension (7) through the hole in the rear bumper (8) (hoist shaft access hole).

   Be sure the hoist end of the extension (7) connects to the hoist shaft. The ribbed square end of the extension is used to lower the spare tire.

5. Turn the wheel wrench counterclockwise to lower the spare tire to the ground. Continue to turn the wheel wrench until the spare tire can be pulled out from under the vehicle.

6. Pull the spare tire out from under the vehicle.

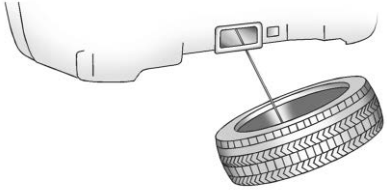

7. Tilt the tire toward the vehicle with some slack in the cable to access the tire/wheel retainer.

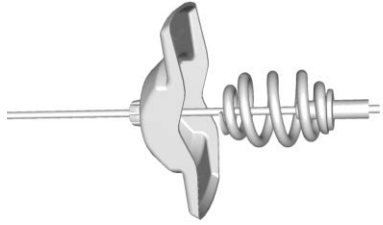

   Tilt the retainer and pull it and the cable and spring through the center of the wheel.

8. Put the spare tire near the flat tire.

Removing the Flat Tire and Installing the Spare Tire

1. Do a safety check before proceeding. See “If a Tire Goes Flat” in the owner’s manual.

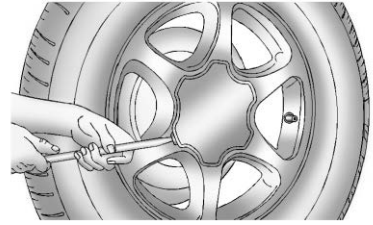

2. If the vehicle has a center cap that covers the wheel fasteners, place the chisel end of the wheel wrench in the slot on the wheel and gently pry the cap off.

   If the wheel has a bolt-on hub cap, loosen the plastic nut caps by turning the wheel wrench counterclockwise. The plastic nut caps will be retained in the hub cap after it is removed from the wheel.

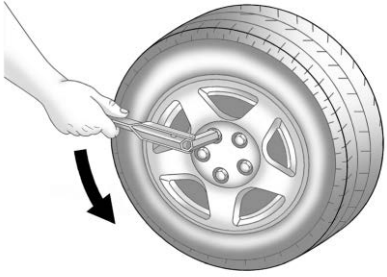

3. Use the wheel wrench to loosen all the wheel nuts. Turn the wheel wrench counterclockwise to loosen the wheel nuts. Do not remove the wheel nuts yet.

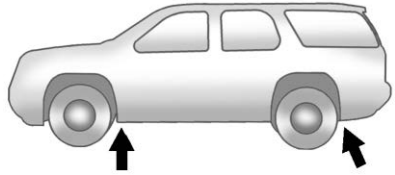

Jacking Locations (Overall View)

4. Position the jack under the vehicle, as shown.

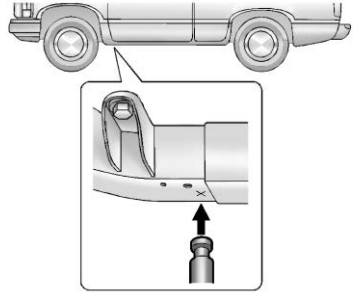

Front Position

Front Tire Flat: If a front tire is flat, use the jack handle and only one jack handle extension. Attach the wheel wrench to the jack handle extension. Attach the jack handle to the jack. Position the jack on the frame behind the flat tire where the frame sections overlap. Turn the wheel wrench clockwise to raise the vehicle. Raise the vehicle far enough off the ground so there is enough room for the spare tire to clear the ground.

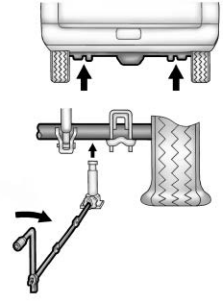

Rear Position

Rear Tire Flat: Position the jack under the rear axle between the spring anchor and the shock absorber bracket.

Make sure the jack head is positioned so that the rear axle is resting securely between the grooves that are on the jack head.

⚠ Warning

Getting under a vehicle when it is lifted on a jack is dangerous. If the vehicle slips off the jack, you could be badly injured or killed. Never get under a vehicle when it is supported only by a jack.

⚠ Warning

Raising the vehicle with the jack improperly positioned can damage the vehicle and even make the vehicle fall. To help avoid personal injury and vehicle damage, be sure to fit the jack lift head into the proper location before raising the vehicle.

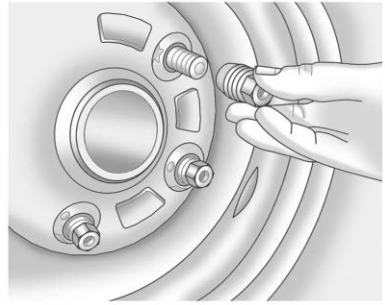

5. Remove all of the wheel nuts.
6. Take off the flat tire.

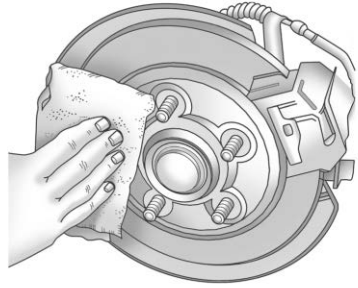

7. Remove any rust or dirt from the wheel bolts, mounting surfaces, and spare wheel.

⚠ Warning

Rust or dirt on a wheel, or on the parts to which it is fastened, can make wheel nuts become loose after time. The wheel could come off and cause a crash. When changing a wheel, remove any rust or dirt from places where the wheel attaches to the vehicle. In an emergency, a cloth or a paper towel can be used; however, use a scraper or wire brush later to remove all rust or dirt.

8. Put the wheel nuts back on with the rounded end of the nuts toward the wheel after mounting the spare tire.

⚠ Warning

Never use oil or grease on bolts or nuts because the nuts might come loose. The vehicle's wheel could fall off, causing a crash.

9. Tighten each wheel nut by hand. Then use the wheel wrench to tighten the nuts until the wheel is held against the hub.
10. Turn the wheel wrench counterclockwise to lower the vehicle. Lower the jack completely.

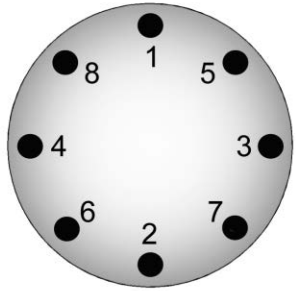

11. Tighten the nuts firmly in a crisscross sequence as shown by turning the wheel wrench clockwise.

⚠ Warning

Wheel nuts that are improperly or incorrectly tightened can cause the wheels to become loose or come off. The wheel nuts should be tightened with a torque wrench to the proper torque specification after replacing. Follow the torque specification supplied by the

(Continued)

Warning (Continued)

aftermarket manufacturer when using accessory locking wheel nuts. See “Capacities and Specifications” in the owner’s manual for original equipment wheel nut torque specifications.

Caution

Improperly tightened wheel nuts can lead to brake pulsation and rotor damage. To avoid expensive brake repairs, evenly tighten the wheel nuts in the proper sequence and to the proper torque specification. See “Capacities and Specifications” in the owner’s manual for the wheel nut torque specification.

When reinstalling the regular wheel and tire, also reinstall either the center cap or the bolt-on hub cap, depending on which one the vehicle has.

- For center caps, line up the tab on the center cap with the slot in the wheel. The cap only goes in one way. Place the cap on the wheel and press until it snaps into place.
- For bolt-on hub caps, line up the plastic nut caps with the wheel nuts and tighten clockwise by hand to get them started. Then tighten with the wheel wrench until snug.

Storing a Flat or Spare Tire and Tools

⚠ Warning

Storing a jack, a tire, or other equipment in the passenger compartment of the vehicle could cause injury. In a sudden stop or collision, loose equipment could strike someone. Store all these in the proper place.

⚠ Warning

Failure to follow these tire storage instructions carefully could result in personal injury or property damage if the hoist cable fails or if the tire comes loose. Make sure the tire is stored securely before driving.

Caution

Storing an aluminum wheel with a flat tire under your vehicle for an extended period of time or with the valve stem pointing up can damage the wheel. Always stow the wheel with the valve stem pointing down and have the wheel/tire repaired as soon as possible.

Caution

The tire hoist can be damaged if there is no tension on the cable when using it. To have the necessary tension, the spare or road tire and wheel assembly must be installed on the tire hoist to use it.

⚠ Warning

An improperly stored spare tire could come loose and cause a crash. To avoid personal injury or property damage, always store the spare tire when the vehicle is parked on a level surface.

Store the tire under the rear of the vehicle in the spare tire carrier. Refer to the following graphics and instructions to help you:

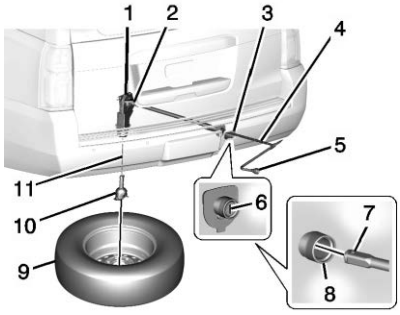

1. Hoist Assembly
2. Hoist Shaft
3. Hoist Shaft Access Cover/Hole
4. Jack Handle Extensions
5. Wheel Wrench
6. Spare Tire Lock
7. Hoist End of Extension Tool
8. Hoist Shaft Access Hole
9. Spare Tire (Valve Stem Pointed Down)
10. Tire/Wheel Retainer
11. Hoist Cable

1. Put the tire (9) on the ground at the rear of the vehicle with the valve stem pointed down, and to the rear.
2. Tilt the tire toward the vehicle. Separate the tire/wheel retainer from the guide pin. Pull the pin through the center of the wheel. Tilt the retainer down through the center wheel opening.

   Make sure the retainer is fully seated across the underside of the wheel.

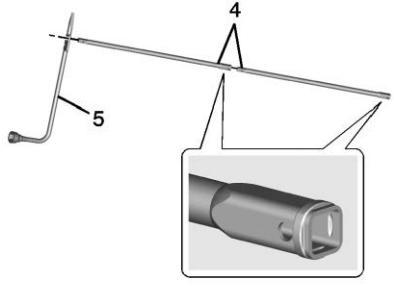

3. Assemble the two jack handle extensions (4) and wheel wrench (5), as shown.

Caution

Use of an air wrench or other power tools with the hoist mechanism is not recommended and could damage the system. Use only the tools supplied with the hoist mechanism.

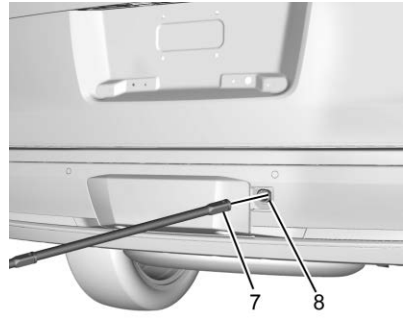

4. Insert the open end of the extension (7) through the hole in the rear bumper (8) (hoist shaft access hole).
5. Raise the tire part way upward. Make sure the retainer is seated in the wheel opening.
6. Raise the tire fully against the underside of the vehicle by turning the wheel wrench clockwise until you hear two clicks or feel it skip twice. The cable cannot be overtightened.

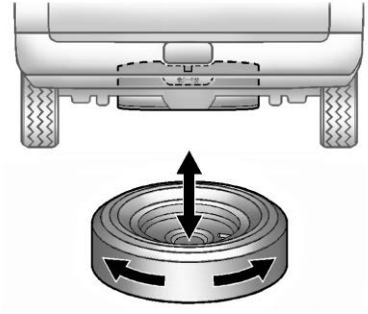

7. Make sure the tire is stored securely. Push, pull, and then try to turn the tire. If the tire moves, use the wheel wrench to tighten the cable.

   Repeat this tightness check procedure when checking the spare tire pressure according to the scheduled maintenance information or any time the spare tire is handled due to service of other components.

Correctly Stored

Incorrectly Stored

8. Reinstall the spare tire lock.
9. Reinstall the hoist shaft access cover.

   If equipped, reinstall the hitch cover and turn the retainers clockwise.

To store the tools:

1. Return the tools (wheel wrench, jack handle, and jack handle extensions) to the tool bag.
2. Assemble the wheel blocks and jack together with the wing nut.

3. Position the jack and wheel blocks in the driver side trim panel over the wheelhouse.
4. Turn the jack knob clockwise until the jack is secured tight in the mounting bracket. Be sure to position the holes in the base of the jack onto the pin in the mounting bracket.
5. Use the retaining bracket to fasten the tool bag on the stud and turn the wing nut clockwise to secure.
6. Close the trim panel door.

Jump Starting

Jump Starting - North America

For more information about the vehicle battery, see *Battery - North America* ⇨ *23*.

If the vehicle's battery (or batteries) has run down, you may want to use another vehicle and some jumper cables to start your vehicle. Be sure to use the following steps to do it safely.

⚠ Warning

WARNING: Battery posts, terminals, and related accessories contain lead and lead compounds, chemicals known to the State of California to cause cancer and birth defects or other reproductive harm. Batteries also contain other chemicals known to the State of California to cause cancer. **WASH HANDS AFTER**

(Continued)

Warning (Continued)

HANDLING. For more information go to www.P65Warnings.ca.gov/passenger-vehicle.

See *California Proposition 65 Warning* ⇨ *13* and the back cover.

⚠ Warning

Batteries can hurt you. They can be dangerous because:

- They contain acid that can burn you.
- They contain gas that can explode or ignite.
- They contain enough electricity to burn you.

If you do not follow these steps exactly, some or all of these things can hurt you.

Caution

Ignoring these steps could result in costly damage to the vehicle that would not be covered by the vehicle warranty. Trying to start the vehicle by pushing or pulling it will not work, and it could damage the vehicle.

1. Check the other vehicle. It must have a 12-volt battery with a negative ground system.

Caution

If the other vehicle does not have a 12-volt system with a negative ground, both vehicles can be damaged. Only use a vehicle that has a 12-volt system with a negative ground for jump starting.

2. If you have a vehicle with two batteries, you should know before you begin that, especially in cold weather, you may not be able to get enough power from a single battery in another vehicle to start your engine. If your vehicle has more than one battery, using the battery that is closer to the starter will reduce electrical resistance. This is located on the passenger side, in the rear of the engine compartment.
3. Get the vehicles close enough so the jumper cables can reach, but be sure the vehicles are not touching each other. If they are, it could cause an unwanted ground connection. You would not be able to start your vehicle, and the bad grounding could damage the electrical systems.

   To avoid the possibility of the vehicles rolling, set the parking brake firmly on both vehicles involved in the jump start procedure. Put an automatic transmission in P (Park) or a manual transmission in Neutral before setting the parking brake. Be sure the transfer case is in a drive gear, not in N (Neutral).

Caution

If any accessories are left on or plugged in during the jump starting procedure, they could be damaged. The repairs would not be covered by the vehicle warranty. Whenever possible, turn off or unplug all accessories on either vehicle when jump starting.

4. Turn the ignition off on both vehicles. Unplug unnecessary accessories from the accessory power outlets. Turn off the radio and all the lamps that are not needed. This will avoid sparks and help save both batteries.
5. Open the hood on the other vehicle and locate the positive (+) and negative (−) terminal locations on that vehicle.

The positive (+) terminal is under a red plastic cover at the positive battery post. To uncover the positive (+) terminal, open the red plastic cover.

For more information on the location of the positive (+) and remote negative (−) terminals, see *Engine Compartment Overview* ⇨ *14*.

⚠ Warning

An electric fan can start up even when the engine is not running and can injure you. Keep hands, clothing, and tools away from any underhood electric fan.

⚠ Warning

Using a match near a battery can cause battery gas to explode. People have been hurt doing this,

(Continued)

Warning (Continued)

and some have been blinded. Use a flashlight if you need more light.

Battery fluid contains acid that can burn you. Do not get it on you. If you accidentally get it in your eyes or on your skin, flush the place with water and get medical help immediately.

⚠ Warning

Fans or other moving engine parts can injure you badly. Keep your hands away from moving parts once the engine is running.

6. Check that the jumper cables do not have loose or missing insulation. If they do, you could get a shock. The vehicles could be damaged too.

Before you connect the cables, here are some basic things you should know. Positive (+) will go to positive (+) or to a remote positive (+) terminal if the vehicle has one. Negative (−) will go to a heavy, unpainted metal engine part or to a remote negative (−) terminal if the vehicle has one.

Do not connect positive (+) to negative (−) or you will get a short that would damage the battery and maybe other parts too. And do not connect the negative (−) cable to the negative (−) terminal on the dead battery because this can cause sparks.

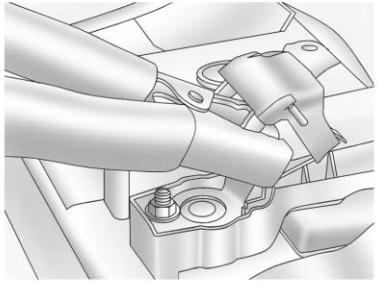

7. Connect the red positive (+) cable to the positive (+) terminal of the vehicle with the dead battery.
8. Do not let the other end touch metal. Connect it to the positive (+) terminal of the good battery. Use a remote positive (+) terminal if the vehicle has one.
9. Connect the black negative (−) cable to the negative (−) terminal of the good battery. Use a remote negative (−) terminal if the vehicle has one. Do not let the other end touch anything until the next step.

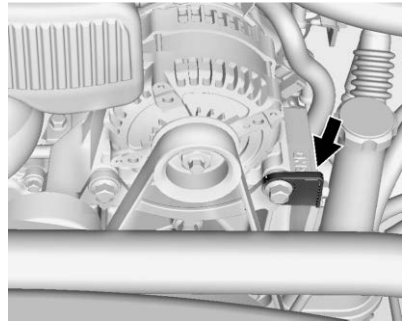

10. Connect the other end of the negative (−) cable to the generator bracket on the vehicle with the dead battery.
11. Start the vehicle with the good battery and run the engine for a while.
12. Try to start the vehicle that had the dead battery. If it will not start after a few tries, it probably needs service.

Caution

If the jumper cables are connected or removed in the wrong order, electrical shorting may occur and damage the vehicle. The repairs would not be covered by the vehicle warranty. Always connect and remove the jumper cables in the correct order, making sure that the cables do not touch each other or other metal.

Jumper Cable Removal

Reverse the sequence exactly when removing the jumper cables.

After starting the disabled vehicle and removing the jumper cables, allow it to idle for several minutes.

Towing the Vehicle

Caution

Incorrectly towing a disabled vehicle may cause damage. The damage would not be covered by the vehicle warranty. Do not lash or hook to suspension components. Use the proper straps around the tires to secure the vehicle. Do not drag a locked wheel/tire while loading the vehicle. Do not use a sling type lift to tow the vehicle. This could damage the vehicle.

GM recommends a flatbed tow truck to transport a disabled vehicle. Use ramps to help reduce approach angles, if necessary. A towed vehicle should have its drive wheels off the ground. Contact Roadside Assistance or a professional towing service if the disabled vehicle must be towed.

Front Attachment Points

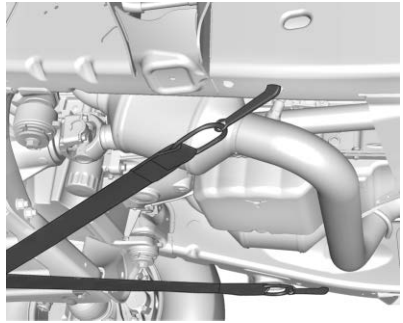

The vehicle is equipped with specific attachment points to be used to pull the vehicle onto a flatbed car carrier from a flat road surface. Do not use these attachment points to pull the vehicle from snow, mud or sand.

Recreational Vehicle Towing

The vehicle was neither designed nor intended to be towed with any of its wheels on the ground. If the vehicle must be towed, see *Towing the Vehicle* ⇨ *42*.

Appearance Care

Exterior Care

Steering, Suspension, and Chassis Components

Visually inspect steering, suspension, and chassis components for damaged, loose, or missing parts or signs of wear at least once a year.

Inspect power steering for proper attachment, connections, binding, leaks, cracks, chafing, etc.

At least once a year, visually inspect the drive shafts for excessive wear, lubricant leaks, and/or damage including; tube dents or cracks, cracked or missing boots, loose or missing boot clamps, loose or missing fasteners, and check for axle seal leaks.

Visually check constant velocity joints for cracked or missing boots, loose or missing boot clamps, and loose or missing fasteners.

For 3500 Series vehicles, at least every other engine oil change lubricate the upper and lower control arm ball joints.

For 3500 Series vehicles equipped with steering linkage, at least every other engine oil change lubricate the tie rod ball joints, idler arm pivot shaft bearings, idler arm socket, and pitman arm socket.

Caution

Lubrication of applicable steering/suspension points should not be done unless the temperature is −12 °C (10 °F) or higher, or damage could result.

Service and Maintenance

Maintenance Schedule
Maintenance Schedule 44

Recommended Fluids, Lubricants, and Parts
Recommended Fluids and Lubricants 46
Maintenance Replacement Parts 46

Maintenance Schedule

Owner Checks and Services

The following intervals apply to a heavy-duty Suburban. For other intervals not listed here, see “Maintenance Schedule” in the owner’s manual.

Additional Required Services – Normal Service

Every 80 000 km/50,000 mi

- Change transfer case fluid. Do not directly power wash the transfer case and/or front/rear axle output seals. High pressure water can overcome the seals and contaminate the fluid. Contaminated fluid will decrease the life of the transfer case and/or drive axles and should be replaced.

Severe Conditions Requiring More Frequent Maintenance*

- Public service, military, or commercial use vehicles including the following:
  - Ambulances, police cars, and emergency rescue vehicles.
  - Civilian vehicles such as light duty pick-up trucks, SUVs, and passenger cars that are used in military applications.
  - Recovery vehicles such as tow trucks and flatbed single vehicle carriers or any vehicle that is consistently used in towing trailers or other loads.
  - High use commercial vehicles such as courier delivery vehicles, private security patrol vehicles, or any vehicles that operate on a 24-hour basis.
  - Any vehicle consistently operated in a high sand or dust environment such as those used on oil pipelines and similar applications.

- Vehicles that are regularly used for short trips of 6 km (3.7 mi) or less.

  * Footnote: Under extreme driving conditions listed above, it may be necessary to replace the spark plugs at more frequent intervals. For further assistance in determining the most suitable service maintenance intervals for your vehicle, contact your dealer.

  Extreme service is for vehicles mainly driven off-road in four-wheel drive or used in farming, mining, forestry, or snow plowing.

Additional Required Services — Severe Service

Every 40 000 km/25,000 mi

- Change transfer case fluid. Do not directly power wash the transfer case and/or front/rear axle output seals. High pressure water can overcome the seals and contaminate the fluid. Contaminated fluid will decrease the life of the transfer case and/or drive axles and should be replaced.

Recommended Fluids, Lubricants, and Parts

Recommended Fluids and Lubricants

The following fluids apply to a heavy-duty Suburban. For other fluids not listed here, see “Recommended Fluids and Lubricants” in the owner’s manual.

Fluids and lubricants identified below by name, part number, or specification can be obtained from your dealer.

Usage	Fluid/Lubricant
Engine Oil	Engine oil meeting the dexos1 specification of the proper SAE viscosity grade. ACDelco dexos1 full synthetic is recommended. See *Engine Oil* ⇨ *15*.
Front Axle (Four-Wheel Drive)	SAE 75W-90 Synthetic Axle Lubricant (GM Part No. 88900401, in Canada 89021678).
Power Steering System	GM Power Steering Fluid (GM Part No. 19329450, in Canada 19329449).
Rear Axle	SAE 75W-90 Synthetic Axle Lubricant (GM Part No. 88900401, in Canada 89021678).

Maintenance Replacement Parts

Replacement parts identified below by name, part number, or specification can be obtained from your dealer.

Part	GM Part Number	ACDelco Part Number
Oil Filter	19303975	PF48E
Spark Plugs	12680072	41-110

Technical Data

Vehicle Data
Trim Heights 47
Capacities and Specifications 48
Engine Drive Belt Routing 49

Vehicle Data

Trim Heights

For information regarding the procedure for setting the trim height, refer to the most recent version of GM Upfitter Bulletin 126 on the Technical Bulletins page of www.gmupfitter.com.

Capacities and Specifications

The following approximate capacities are given in metric and English conversions. See *Recommended Fluids and Lubricants* ⇨ *46*.

Application	Capacities	
	Metric	English
Air Conditioning Refrigerant	For the air conditioning system refrigerant type and charge amount, see the refrigerant label under the hood. See your dealer for more information.	
Cooling System	15.3 L	16.2 qt
Engine Oil with Filter	5.7 L	6.0 qt
All capacities are approximate. When adding, be sure to fill to the approximate level, as recommended in this manual. Recheck fluid level after filling.		

Engine Specifications

Engine	VIN Code	Spark Plug Gap
6.0L V8	G	0.95–1.10mm (0.037–0.043 in)

Engine Drive Belt Routing

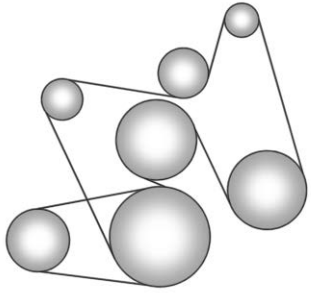

Index

A

Air Cleaner/Filter, Engine 18
Appearance Care
  Exterior 43
Automatic
  Transmission Fluid 17
Axle, Front 24
Axle, Rear 24

B

Battery - North America 23, 38

C

California Proposition
  65 Warning 13, 23, 38
Canadian Vehicle Owners 2
Capacities and Specifications 48
Cleaning
  Exterior Care 43
Cooling System 18

D

Drive Belt Routing, Engine 49

E

Electrical System
  Instrument Panel Fuse Block ...26
Engine
  Air Cleaner/Filter 18
  Compartment Overview 14
Engine (cont'd)
  Cooling System 18
  Drive Belt Routing 49
  Overheating 21
  Starting 6

F

Filter,
  Engine Air Cleaner 18
Flat Tire
  Changing 29
Fluid
  Automatic Transmission 17
  Power Steering 22
Front Axle 24
Fuses
  Instrument Panel Fuse Block ...26

I

Introduction 2

J

Jump Starting - North America ... 38

L

Lane Departure Warning (LDW) .. 8
Lane Departure Warning Light 4
Lights
  Lane Departure Warning 4

M
Maintenance Schedule 44
Recommended Fluids and Lubricants 46
Mirrors 3

N
Noise Control System 25

O
Oil
Engine 15
Overheating, Engine 21

P
Power
Steering Fluid 22
Proposition
65 Warning, California 13, 23, 38

R
Rear Axle 24
Recommended Fluids and Lubricants 46
Recreational Vehicle Towing 42
Replacement Parts
Maintenance 46
Routing, Engine Drive Belt 49

S
Specifications and Capacities 48
Starting the Engine 6
Steering 5
Fluid, Power 22
Supplement
Using 2
System
Noise Control 25

T
Tires
Changing 29
Towing
Recreational Vehicle 42
Trailer 9
Vehicle 42
Trailer
Towing 9
Transmission
Fluid, Automatic 17
Trim Height 47

U
Using This Supplement 2

V
Vehicle
Canadian Owners 2
Towing 42

W
Warning
Lane Departure (LDW) 8

U.S. Only

84161712 A