GTC, ASTRA

Owner's Manual

Contents

Introduction 2
In brief 6
Keys, doors and windows 22
Seats, restraints 39
Storage 60
Instruments and controls 72
Lighting 116
Climate control 129
Driving and operating 139
Vehicle care 199
Service and maintenance 253
Technical data 257
Customer information 280
Index 288

Introduction

Fuel	Designation			
Engine oil	Grade			
	Viscosity			
Tyre pressure		Tyre size	Front	Rear
	Summer tyres			
	Winter tyres			
Weights				
	Gross vehicle weight rating			
	- Kerb weight, basic model			
	= Loading			

Vehicle specific data

Please enter your vehicle's data on the previous page to keep it easily accessible. This information is available in the sections "Service and maintenance" and "Technical data" as well as on the identification plate.

Introduction

Your vehicle is a designed combination of advanced technology, safety, environmental friendliness and economy.

This Owner's Manual provides you with all the necessary information to enable you to drive your vehicle safely and efficiently.

Make sure your passengers are aware of the possible risk of accident and injury which may result from improper use of the vehicle.

You must always comply with the specific laws and regulations of the country that you are in. These laws may differ from the information in this Owner's Manual.

Disregarding the description given in this manual may affect your warranty.

When this Owner's Manual refers to a workshop visit, we recommend your Opel Service Partner. For gas vehicles we recommend an Opel Repairer authorised for servicing gas vehicles.

All Opel Service Partners provide first-class service at reasonable prices. Experienced mechanics trained by Opel work according to specific Opel instructions.

The customer literature pack should always be kept ready to hand in the vehicle.

Using this manual

- This manual describes all options and features available for this model. **Certain descriptions, including those for display and menu functions, may not apply to your vehicle due to model variant, country specifications, special equipment or accessories.**
- The "In brief" section will give you an initial overview.
- The table of contents at the beginning of this manual and within each section shows where the information is located.
- The index will enable you to search for specific information.
- This Owner's Manual depicts left-hand drive vehicles. Operation is similar for right-hand drive vehicles.
- The Owner's Manual uses the engine identifier code. The corresponding sales designation and engineering code can be found in the section "Technical data".
- Directional data, e.g. left or right, or front or back, always relate to the direction of travel.
- Displays may not support your specific language.
- Display messages and interior labelling are written in **bold** letters.

Danger, Warnings and Cautions

⚠Danger

Text marked ⚠**Danger** provides information on risk of fatal injury. Disregarding this information may endanger life.

⚠Warning

Text marked ⚠**Warning** provides information on risk of accident or injury. Disregarding this information may lead to injury.

Caution

Text marked **Caution** provides information on possible damage to the vehicle. Disregarding this information may lead to vehicle damage.

Symbols

Page references are indicated with ⇨. ⇨ means "see page".

Page references and index entries refer to the indented headings given in the section table of content.

We wish you many hours of pleasurable driving.

Adam Opel GmbH

In brief

Initial drive information

Vehicle unlocking

Press 🔓 to unlock the doors and load compartment. Open the doors by pulling the handles.

3-door hatchback

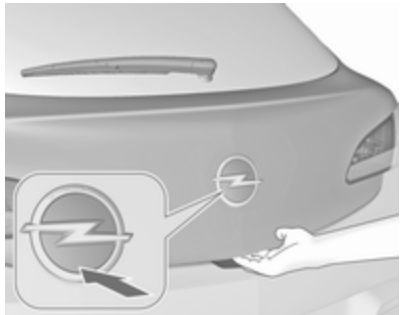

To open the tailgate, push the brand emblem at the bottom half.

Press 🚗 on remote control to unlock and open the tailgate. The doors remain locked.

4-door notchback

Press on the remote control for at least two seconds; the boot lid opens slightly.

Radio remote control ⇨ 23, Central locking system ⇨ 24, Load compartment ⇨ 27.

Seat adjustment

Longitudinal adjustment

Pull handle, slide seat, release handle. Try to move the seat back and forth to ensure that the seat is locked in place.

Seat position ⇨ 41, Manual seat adjustment ⇨ 42, Power seat adjustment ⇨ 45.

Backrest inclination

Pull lever, adjust inclination and release lever. Allow the seat to engage audibly.

Seat position ⇨ 41, Manual seat adjustment ⇨ 42, Power seat adjustment ⇨ 45, Seat folding ⇨ 44.

Seat height

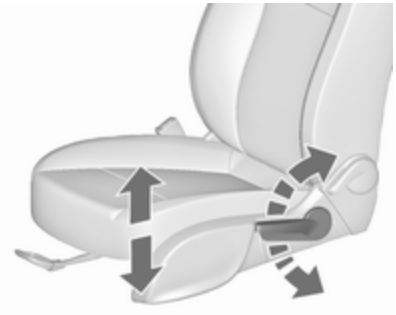

Lever pumping motion

up : seat higher
down : seat lower

Seat position ⇨ 41, Manual seat adjustment ⇨ 42, Power seat adjustment ⇨ 45.

Seat inclination

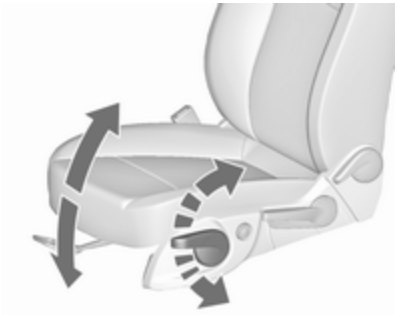

Lever pumping motion

up : front end higher
down : front end lower

Seat position ⇨ 41, Manual seat adjustment ⇨ 42, Power seat adjustment ⇨ 45.

Head restraint adjustment

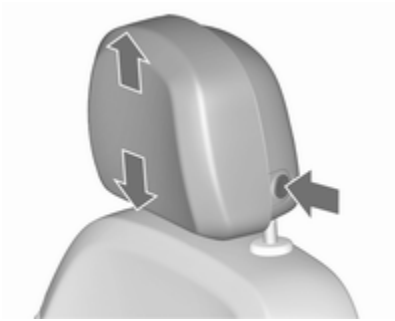

Press release button, adjust height, engage.

Head restraints ⇨ 39.

Seat belt

Pull out the seat belt and fasten in belt buckle. The seat belt must not be twisted and must fit close against the body. The backrest must not be tilted back too far (maximum approx. 25 °).

To unfasten belt, press red button on belt buckle.

Seat position ⇨ 41, Seat belts ⇨ 48, Airbag system ⇨ 51.

Mirror adjustment

Interior mirror

To adjust the mirror, move the mirror housing in the desired direction.

Manual anti-dazzle interior mirror ⇨ 33, Automatic anti-dazzle interior mirror ⇨ 33.

Exterior mirrors

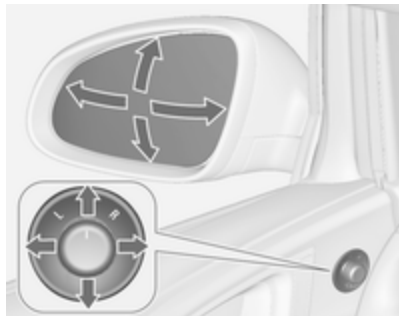

Select the relevant exterior mirror and adjust it.

Convex exterior mirrors ⇨ 31, Electric adjustment ⇨ 31, Folding exterior mirrors ⇨ 32, Heated exterior mirrors ⇨ 32.

Steering wheel adjustment

Unlock the lever, adjust the steering wheel, then engage the lever and ensure it is fully locked.

Do not adjust the steering wheel unless the vehicle is stationary and the steering wheel lock has been released.

Airbag system ⇨ 51, Ignition positions ⇨ 141.

Instrument panel overview

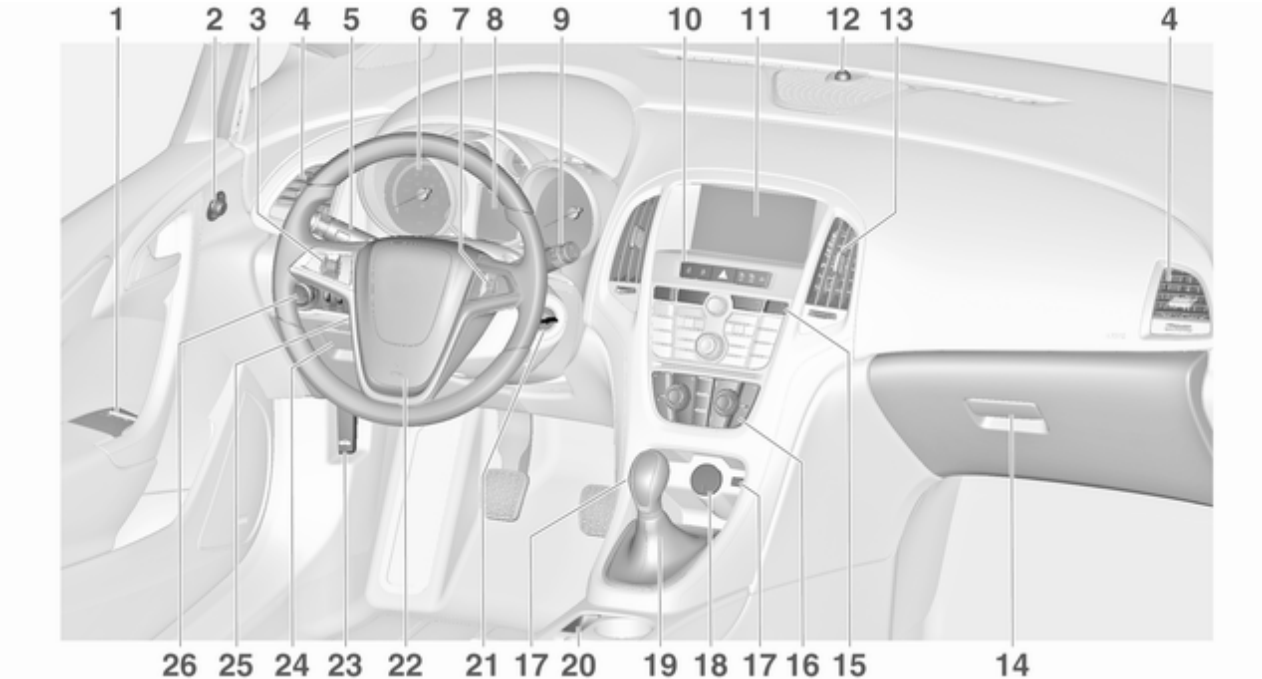

1 Power windows 34
2 Exterior mirrors 31
3 Cruise control 159
Speed limiter 161
Adaptive cruise control 162
Forward collision alert 169
4 Side air vents 137
5 Turn and lane-change signals, headlight flash, low beam and high beam, high beam assist 123
Exit lighting 127
Parking lights 124
Buttons for Driver Information Centre 93
6 Instruments 80
7 Steering wheel controls 73
8 Driver Information Centre 93
9 Windscreen wiper, windscreen washer system, headlight washer system, rear window wiper, rear window washer system 74
10 Sport mode 157
Central locking system 24
Fuel selector 81
Hazard warning flashers 123
Control indicator for airbag deactivation 87
Control indicator for front passenger seat belt 87
Tour mode 157
11 Info-Display 97
12 Anti-theft alarm system status LED 29
13 Centre air vents 137
14 Glovebox 60
15 Traction Control system (TC) 155
Electronic Stability Control (ESC) 155
Parking assist systems 175
Lane departure warning 187
Eco button for stop-start system 142
Unlock button for boot lid 27
16 Climate control system 129
17 AUX input, USB input, SD card slot 11
18 Power outlet 78
19 Selector lever, manual transmission 151
Automatic transmission 147
20 Electric parking brake 153
21 Ignition switch with steering wheel lock 141
22 Horn 74
Driver airbag 52
23 Bonnet release lever 201
24 Storage compartment, fuse box 225
25 Steering wheel adjustment . . 73
26 Light switch 116
Headlight range adjustment 119
Front fog lights 124

Rear fog light 124
Instrument illumination 125

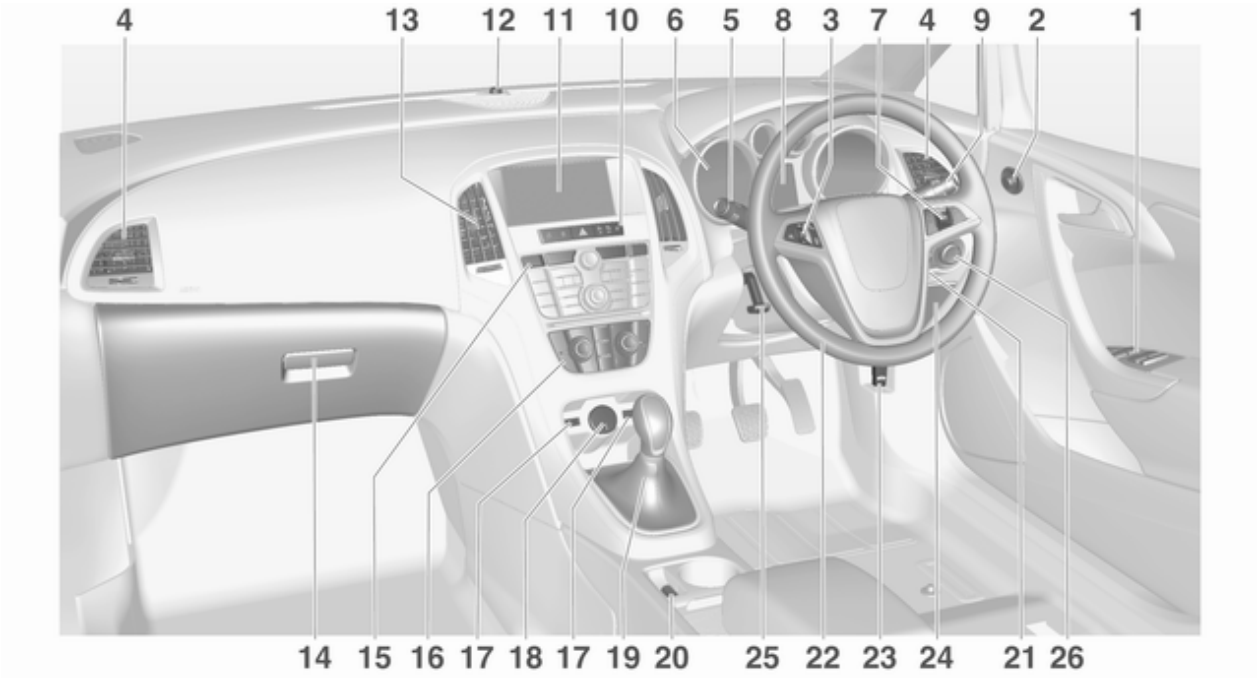
4
13
12
11
10
6
5
8
3
7
4
9
2
1
14
15
16
17
18
17
19
20
25
22
23
24
21
26

Exterior lighting

Turn light switch:

0 : lights off
⇶ : sidelights
≣D : low beam

Automatic light control

AUTO : automatic light control: exterior lighting is switched on and off automatically
⏻ : activation or deactivation of the automatic light control
⇶ : sidelights
≣D : low beam

Fog lights

Press light switch:

≠D : front fog lights
D≠ : rear fog light

Lighting ⇨ 116.

Headlight flash, high beam and low beam

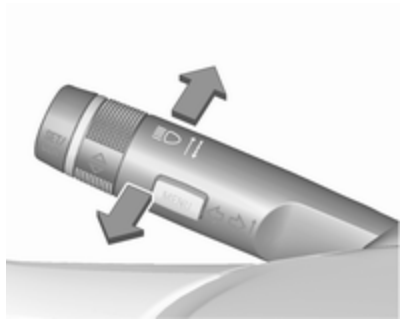

headlight flash : pull lever
high beam : push lever
low beam : push or pull lever

Automatic light control ⇨ 117, High beam ⇨ 118, Headlight flash ⇨ 118, Adaptive forward lighting ⇨ 120.

Turn and lane-change signals

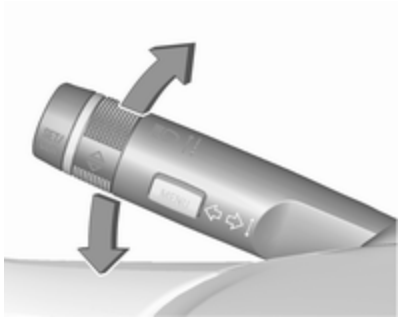

lever up : right turn signal
lever down : left turn signal

Turn and lane-change signals ⇨ 123, Parking lights ⇨ 124.

Hazard warning flashers

Operated by pressing ⚠.

Hazard warning flashers ⇨ 123.

Horn

Press 📯.

Climate control

Heated rear window, heated exterior mirrors

The heating is operated by pressing ⊞.

Heated rear window ⇨ 36.

Demisting and defrosting the windows

Press ⊞.

Set the temperature control to the highest level.

Heated rear window ⊞ on.

Climate control system ⇨ 129.

Washer and wiper systems

Windscreen wiper

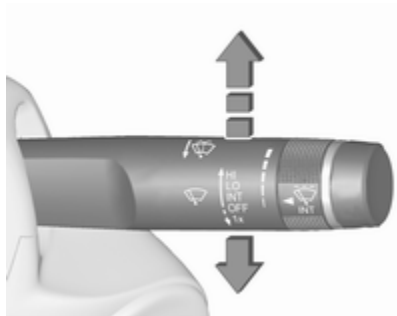

HI : fast
LO : slow
INT : interval wiping or automatic wiping with rain sensor
OFF : off

For a single wipe when the windscreen wiper is off, press the lever down to position **1x**.

Windscreen wiper ⇨ 74, Wiper blade replacement ⇨ 207.

Windscreen and headlight washer

Pull lever.

Windscreen and headlight washer system ⇨ 74, Washer fluid ⇨ 204.

Rear window wiper

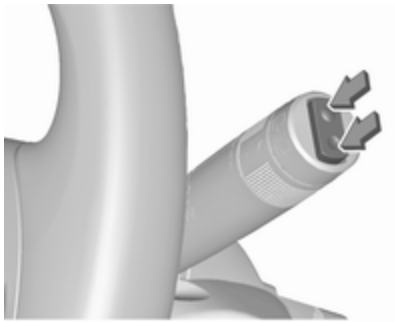

Press the rocker switch to activate the rear window wiper:

upper switch	:	continuous operation
lower switch	:	intermittent operation
middle position	:	off

Rear window washer

Push lever.

Washer fluid is sprayed on the rear window and the wiper wipes a few times.

Rear window wiper/washer ⇨ 76.

Transmission

Manual transmission

Reverse: with the vehicle stationary, depress clutch pedal, press the release button on the selector lever and engage the gear.

If the gear does not engage, set the lever to neutral, release the clutch pedal and depress again; then repeat gear selection.

Manual transmission ⇨ 151.

Automatic transmission

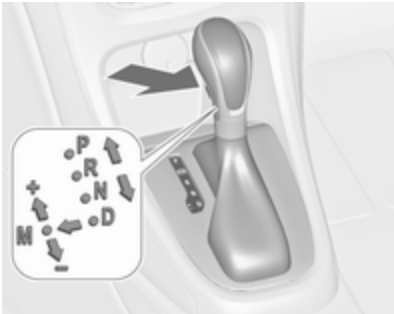

P : park
R : reverse
N : neutral
D : automatic mode
M : manual mode: move selector lever from **D** to the left.
+ : manual mode upshifting
– : manual mode downshifting

The selector lever can only be moved out of **P** when the ignition is on and the brake pedal is applied. To engage **P** or **R**, press the release button.

Automatic transmission ⇨ 147.

Starting off

Check before starting off

- Tyre pressure and condition ⇨ 229, ⇨ 271.
- Engine oil level and fluid levels ⇨ 202.
- All windows, mirrors, exterior lighting and number plates are free from dirt, snow and ice and are operational.
- Proper position of mirrors, seats, and seat belts ⇨ 31, ⇨ 41, ⇨ 49.
- Brake function at low speed, particularly if the brakes are wet.

Starting the engine

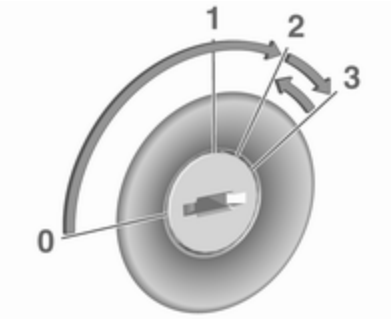

- Turn key to position **1**.
- Move the steering wheel slightly to release the steering wheel lock.
- Operate clutch and brake.
- Automatic transmission in **P** or **N**.
- Do not operate accelerator pedal.
- Diesel engines: turn the key to position **2** for preheating and wait until control indicator extinguishes.
- Turn key to position **3** and release.

Starting the engine ⇨ 141.

Stop-start system

If the vehicle is at a low speed or at a standstill and certain conditions are fulfilled, activate an Autostop as follows:

- Depress the clutch pedal.
- Set the lever in neutral.
- Release the clutch pedal.

An Autostop is indicated by the needle at the **AUTOSTOP** position in the tachometer.

To restart the engine, depress the clutch pedal again.

Stop-start system ⇨ 142.

Parking

⚠Warning

- Do not park the vehicle on an easily ignitable surface. The high temperature of the exhaust system could ignite the surface.
- Always apply the parking brake. Activate the manual parking brake without pressing the release button. Apply as firmly as possible on a downhill slope or uphill slope. Depress brake pedal at the same time to reduce operating force.

  For vehicles with electric parking brake, pull switch Ⓟ for approx. one second.

  The electric parking brake is applied when control indicator Ⓟ illuminates ⇨ 88.
- Switch off the engine.
- If the vehicle is on a level surface or uphill slope, engage first gear or set the selector

lever to position **P** before removing the ignition key. On an uphill slope, turn the front wheels away from the kerb.

If the vehicle is on a downhill slope, engage reverse gear or set the selector lever to position **P** before removing the ignition key. Turn the front wheels towards the kerb.

- Close the windows and the sunroof.
- Remove the ignition key from the ignition switch. Turn the steering wheel until the steering wheel lock is felt to engage.

  For vehicles with automatic transmission, the key can only be removed when the selector lever is in position **P**.

- Lock the vehicle by pressing on the radio remote control.

  Activate the anti-theft alarm system ⇨ 29.

- The engine cooling fans may run after the engine has been switched off ⇨ 201.

Caution

After running at high engine speeds or with high engine loads, operate the engine briefly at a low load or run in neutral for approx. 30 seconds before switching off, in order to protect the turbocharger.

Keys, locks ⇨ 22, Laying the vehicle up for a long period of time ⇨ 200.

Keys, doors and windows

Keys, locks **22**
Keys 22
Car Pass 23
Radio remote control 23
Memorised settings 24
Central locking system 24
Automatic locking 26
Child locks 26
Doors **27**
Load compartment 27
Vehicle security **29**
Anti-theft locking system 29
Anti-theft alarm system 29
Immobiliser 31
Exterior mirrors **31**
Convex shape 31
Electric adjustment 31
Folding mirrors 32
Heated mirrors 32
Interior mirrors **33**
Manual anti-dazzle 33
Automatic anti-dazzle 33
Windows **33**
Windscreen 33
Manual windows 34
Power windows 34
Heated rear window 36
Sun visors 36
Roof **36**
Sunroof 36
Glass panel 38

Keys, locks

Keys

Caution
Do not attach heavy or bulky items to the ignition key.

Replacement keys

The key number is specified in the Car Pass or on a detachable tag.

The key number must be quoted when ordering replacement keys as it is a component of the immobiliser system.

Locks ⇨ 249.

The code number of the adapter for the locking wheel nuts is specified on a card. It must be quoted when ordering a replacement adapter.

Wheel changing ⇨ 238.

Key with foldaway key section

Press button to extend. To fold the key, first press the button.

Car Pass

The Car Pass contains security related vehicle data and should therefore be kept in a safe place.

When the vehicle is taken to a workshop, this vehicle data is needed in order to perform certain operations.

Radio remote control

Used to operate:

- central locking system
- anti-theft locking system
- anti-theft alarm system
- power windows
- sunroof

The radio remote control has a range of approx. 20 metres. It can be restricted by external influences. The hazard warning flashers confirm operation.

Handle with care, protect from moisture and high temperatures and avoid unnecessary operation.

Fault

If the central locking system cannot be operated with the radio remote control, it may be due to the following:

- Range is exceeded.
- Battery voltage is too low.
- Frequent, repeated operation of the radio remote control while not in range, which will require re-synchronisation.
- Overload of the central locking system by operating at frequent intervals, the power supply is interrupted for a short time.
- Interference from higher-power radio waves from other sources.

Unlocking ⇨ 24.

Basic settings

Some settings can be changed in the Settings menu in the Info-Display. Vehicle personalisation ⇨ 105.

Radio remote control battery replacement

Replace the battery as soon as the range reduces.

Batteries do not belong in household waste. They must be disposed of at an appropriate recycling collection point.

Key with foldaway key section

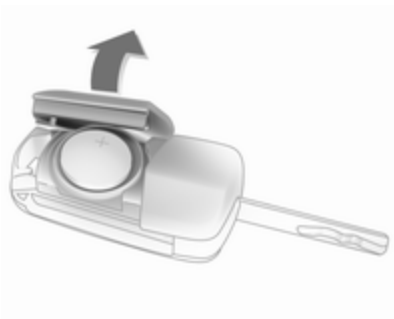

Extend the key and open the unit. Replace the battery (battery type CR 2032), paying attention to the installation position. Close the unit and synchronise.

Memorised settings

Whenever the key is removed from the ignition switch, the following settings are automatically memorised by the key:

- lighting
- Infotainment system
- central locking system
- Sport mode settings
- comfort settings

The saved settings are automatically used the next time the memorised key is inserted into the ignition switch and turned to position **1** ⇨ 141.

A precondition is that **Personalization by driver** is activated in the personal settings of the Graphic-Info-Display. This must be set for each key used. On vehicles equipped with Colour-Info-Display, the personalisation is permanently activated.

Vehicle personalisation ⇨ 105.

Central locking system

Unlocks and locks doors, load compartment and fuel filler flap.

A pull on an interior door handle unlocks the respective door. Pulling the handle once more opens the door.

Note
In the event of an accident in which airbags or belt pretensioners are deployed, the vehicle is automatically unlocked.

Note
A short time after unlocking with the remote control, the doors are relocked automatically if no door has been opened.

Unlocking

Press 🔓.

Two settings are selectable:

- To unlock only the driver's door, load compartment and fuel filler flap, press 🔓 once. To unlock all doors, press 🔓 twice.
- Press 🔓 once to unlock all doors, load compartment and fuel filler flap.

The setting can be changed in the Settings menu in the Info-Display. Vehicle personalisation ⇨ 105.

The setting can be saved for the key being used. Memorised settings ⇨ 24.

Unlocking and opening the tailgate ⇨ 27.

Locking

Close doors, load compartment and fuel filler flap.

Press 🔒.

If the driver's door is not closed properly, the central locking system will not work.

Central locking buttons

Locks or unlocks all doors, the load compartment and fuel filler flap from inside the passenger compartment.

Press 🔒 to lock.

Press 🔓 to unlock.

Fault in radio remote control system

Unlocking

Manually unlock the driver's door by turning the key in the lock. Switch on the ignition and press the central locking button 🔓 to unlock the other doors, load compartment and fuel filler flap. By switching on the ignition, the anti-theft locking system is deactivated.

Locking

Manually lock the driver's door by turning the key in the lock.

Fault in central locking system

Unlocking

Manually unlock the driver's door by turning the key in the lock. The other doors can be opened by pulling the interior handle twice. The load compartment and fuel filler flap cannot be opened. To deactivate the anti-theft locking system, switch on the ignition ⇨ 29.

Locking

Push inside locking knob of all doors except driver's door. Then close the driver's door and lock it from the outside with the key. The fuel filler flap and tailgate cannot be locked.

Automatic locking

This security feature can be configured to automatically lock all doors, load compartment and fuel filler flap as soon as a certain speed is exceeded.

Additionally, it is configurable to unlock the driver's door or all doors after the ignition is switched off and the ignition key is removed (manual transmission) or the selector lever is moved to position **P** (automatic transmission).

Settings can be changed in the Settings menu in the Info-Display. Vehicle personalisation ⇨ 105.

The settings can be saved for the key being used ⇨ 24.

Child locks

⚠Warning

Use the child locks whenever children are occupying the rear seats.

Using a key or suitable screwdriver, turn the child lock in the rear door to the horizontal position. The door cannot be opened from the inside.

To deactivate, turn the child lock to the vertical position.

Doors

Load compartment

Tailgate

Opening
3-door hatchback

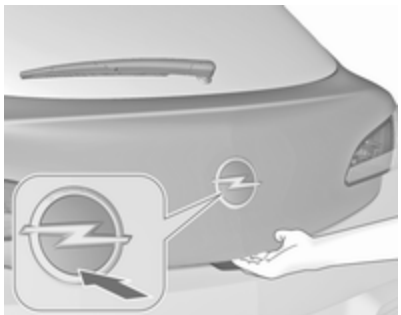

Press on radio remote control or push the brand emblem at the bottom half to unlock and open the tailgate.

Pressing opens the tailgate even if the doors are locked.

4-door notchback

To unlock the boot lid, press on the remote control for at least two seconds, or, to open from the inside, press in the centre console; the boot lid is opened slightly.

With the doors centrally locked, the boot lid cannot be opened by pressing in the centre console.

Closing

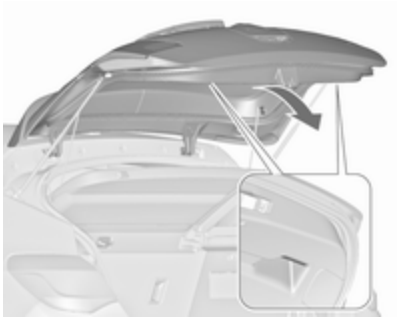

Use one of the interior handles.

Do not push the touchpad switch or the brand emblem whilst closing as this will unlock the tailgate again.

Central locking system ⇨ 24.

General hints for operating tailgate

⚠ Danger

Do not drive with the tailgate open or ajar, e.g. when transporting bulky objects, since toxic exhaust gases, which cannot be seen or smelled, could enter the vehicle. This can cause unconsciousness and even death.

Caution

Before opening the tailgate check overhead obstructions, such as a garage door, to avoid damage to the tailgate. Always check the moving area above and behind the tailgate.

Note
The installation of certain heavy accessories onto the tailgate may affect its ability to remain open.

Vehicle security

Anti-theft locking system

⚠ Warning

Do not use the system if there are people in the vehicle! The doors cannot be unlocked from the inside.

The system deadlocks all the doors. All doors must be closed otherwise the system cannot be activated.

If the ignition was on, the driver's door must be opened and closed once so that the vehicle can be secured.

Unlocking the vehicle disables the mechanical anti-theft locking system. This is not possible with the central locking button.

Activating

Press 🔒 on the radio remote control twice within 15 seconds.

Anti-theft alarm system

The anti-theft alarm system is combined with the anti-theft locking system.

It monitors:

- doors, tailgate, bonnet
- passenger compartment including adjoining load compartment
- vehicle inclination, e.g. if it is raised
- ignition

Activation

- Self-activated 30 seconds after locking the vehicle by pressing 🔒 once.
- Directly by pressing 🔒 twice briefly within five seconds.

Note

Changes to the vehicle interior such as the use of seat covers, and open windows or sunroof, could impair the function of passenger compartment monitoring.

Activation without monitoring of passenger compartment and vehicle inclination

Switch off the monitoring of passenger compartment and vehicle inclination when animals are being left in the vehicle, because of high volume ultrasonic signals or movements triggering the alarm. Also switch off when the vehicle is on a ferry or train.

1. Close tailgate, bonnet, windows and sunroof.
2. Press . LED in the button illuminates for a maximum of ten minutes.
3. Close doors.
4. Activate the anti-theft alarm system.

Status message is displayed in the Driver Information Centre.

Status LED

Status LED is integrated in the sensor on top of the instrument panel.

Status during the first 30 seconds of anti-theft alarm system activation:

LED illuminates	:	test, arming delay
LED flashes quickly	:	doors, tailgate or bonnet not completely closed, or system fault

Status after system is armed:

LED flashes slowly	:	system is armed

Seek the assistance of a workshop in the event of faults.

Deactivation

Unlocking the vehicle by pressing deactivates the anti-theft alarm system.

The system is not deactivated by unlocking the driver's door with the key or with the central locking button in the passenger compartment.

Alarm

When triggered, the alarm horn sounds and the hazard warning lights flash simultaneously. The number and duration of alarm signals are stipulated by legislation.

The alarm can be silenced by pressing any button on the radio remote control or by switching on the ignition.

The anti-theft alarm system can be deactivated only by pressing or by switching on the ignition.

A triggered alarm, which has not been interrupted by the driver, will be indicated by the hazard warning lights. They will flash quickly three times the next time the vehicle is unlocked with the radio remote control. Additionally, a warning message or a warning code is displayed in the Driver Information Centre after switching on the ignition.

Vehicle messages ⇨ 99.

If the vehicle's battery is to be disconnected (e.g. for maintenance work), the alarm siren must be deactivated as follows: Switch the ignition on then off, then disconnect the vehicle's battery within 15 seconds.

Immobiliser

The system is part of the ignition switch and checks whether the vehicle is allowed to be started with the key being used.

The immobiliser is activated automatically after the key has been removed from the ignition switch.

If the control indicator flashes when the ignition is on, there is a fault in the system; the engine cannot be started. Switch off the ignition and repeat the start attempt.

If the control indicator continues flashing, attempt to start the engine using the spare key and seek the assistance of a workshop.

Note
The immobiliser does not lock the doors. You should always lock the vehicle after leaving it and switch on the anti-theft alarm system ⇨ 24, ⇨ 29.

Control indicator ⇨ 92.

Exterior mirrors

Convex shape

The convex exterior mirror contains an aspherical area and reduces blind spots. The shape of the mirror makes objects appear smaller, which will affect the ability to estimate distances.

Electric adjustment

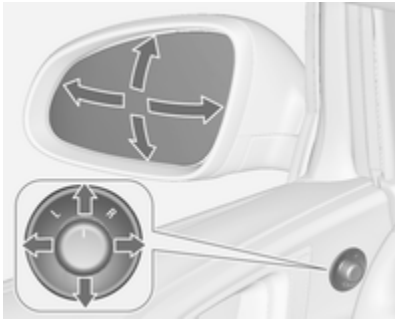

Select the relevant exterior mirror by turning the control to left **(L)** or right **(R)**. Then swivel the control to adjust the mirror.

In position **0** no mirror is selected.

Folding mirrors

For pedestrian safety, the exterior mirrors will swing out of their normal mounting position if they are struck with sufficient force. Reposition the mirror by applying slight pressure to the mirror housing.

Electric folding

Turn control to **0**, then push the control down. Both exterior mirrors will fold.

Push the control down again - both exterior mirrors return to their original position.

If an electrically folded mirror is manually extended, pressing down the control will only electrically extend the other mirror.

Heated mirrors

Operated by pressing ⧈.

Heating works with the engine running and is switched off automatically after a short time.

Interior mirrors

Manual anti-dazzle

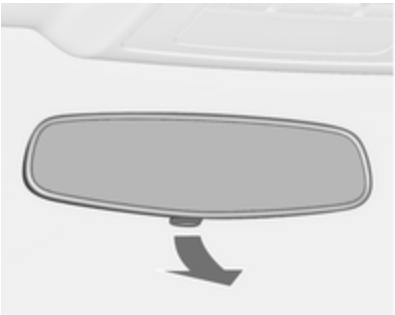

To reduce dazzle, adjust the lever on the underside of the mirror housing.

Automatic anti-dazzle

Dazzle from following vehicles at night is automatically reduced.

Windows

Windscreen

Heat-reflecting windscreen

The heat-reflecting windscreen has a coating which reflects solar radiation. Also data signals, e.g. from toll stations, might be reflected.

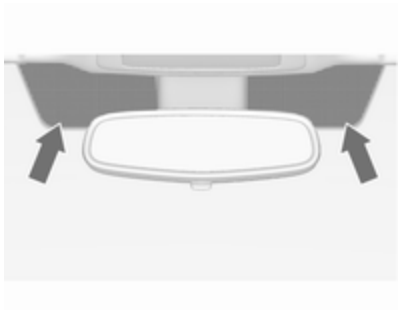

The marked areas on the windscreen are not covered with the coating. Devices for electronic data recording and fee payment must be attached in these areas. Otherwise data recording malfunctions may occur.

Windscreen stickers

Do not attach stickers such as toll road stickers or similar on the windscreen in the area of the interior mirror. Otherwise the detection zone of the sensor and the view area of the camera in the mirror housing could be restricted.

Windscreen replacement

Caution

If the vehicle has a front-looking camera sensor for the driver assistance systems, it is very important that any windscreen replacement is performed accurately according to Opel specifications. Otherwise, these systems may not work properly and there is a risk of unexpected behaviour and/or messages from these systems.

Manual windows

The door windows can be opened or closed with the window cranks.

Power windows

⚠ Warning

Take care when operating the power windows. Risk of injury, particularly to children.

If there are children on the rear seats, switch on the child safety system for the power windows.

Keep a close watch on the windows when closing them. Ensure that nothing becomes trapped in them as they move.

Switch on ignition to operate power windows. Retained power off ⇨ 141.

Operate the switch for the respective window by pushing to open or pulling to close.

Pushing or pulling gently to the first detent: window moves up or down as long as the switch is operated.

Pushing or pulling firmly to the second detent and then releasing: window moves up or down automatically with safety function enabled. To stop movement, operate the switch once more in the same direction.

Safety function

If the window glass encounters resistance above the middle of the window during automatic closing, it is immediately stopped and opened again.

Override safety function

In the event of closing difficulties due to frost or the like, switch on the ignition, then pull the switch to the first detent and hold. The window moves up without safety function enabled. To stop movement, release the switch.

Child safety system for rear windows

Press ⊠ to deactivate rear door power windows; the LED illuminates. To activate, press ⊠ again.

Operating windows from outside

The windows can be operated remotely from outside the vehicle.

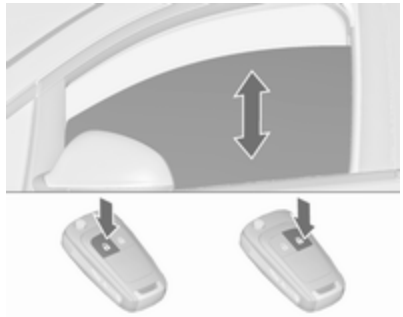

Press and hold 🔓 to open windows.

Press and hold 🔒 to close windows.

Release button to stop window movement.

If the windows are fully opened or closed, the hazard warning lights will flash twice.

Overload

If the windows are repeatedly operated within short intervals, the window operation is disabled for some time.

Initialising the power windows

If the windows cannot be closed automatically (e.g. after disconnecting the vehicle battery), a warning message or a warning code is displayed in the Driver Information Centre.

Vehicle messages ⇨ 99.

Activate the window electronics as follows:

1. Close doors.
2. Switch on ignition.
3. Pull switch until the window is closed and keep pulling for additional two seconds.
4. Repeat for each window.

Heated rear window

Operated by pressing ⊞.

Heating works with the engine running and is switched off automatically after a short time.

Sun visors

The sun visors can be folded down or swivelled to the side to prevent dazzling.

If the sun visors have integral mirrors, the mirror covers should be closed when driving.

A ticket holder is located on the backside of the sun visor.

Roof

Sunroof

⚠ Warning

Take care when operating the sunroof. Risk of injury, particularly to children.

Keep a close watch on the movable parts when operating them. Ensure that nothing becomes trapped in them as they move.

Switch on ignition to operate the sunroof.

Open or close

Press or gently to the first detent: sunroof is opened or closed with safety function enabled as long as the switch is operated.

Press or firmly to the second detent and then release: the sunroof is opened or closed automatically with safety function enabled. To stop movement, operate the switch once more.

Raise or close

Press or : sunroof is raised or closed automatically with safety function enabled.

If the sunroof is raised, it can be opened in one step by pressing .

Sunblind

The sunblind is manually operated.

Close or open the sunblind by sliding. When the sunroof is open, the sunblind is always open.

General hints

Safety function

If the sunroof encounters resistance during automatic closing, it is immediately stopped and opened again.

Override safety function

In the event of closing difficulties, e.g. due to frost, hold the switch pressed to the second detent. The sunroof closes with safety function disabled. To stop movement, release the switch.

Closing sunroof from outside

The sunroof can be closed remotely from outside the vehicle.

Press and hold to close the sunroof.

Release the button to stop the movement.

Initialising after a power failure

After a power failure, it may only be possible to operate the sunroof to a limited extent. Have the system initialised by your workshop.

Glass panel

Panorama roof

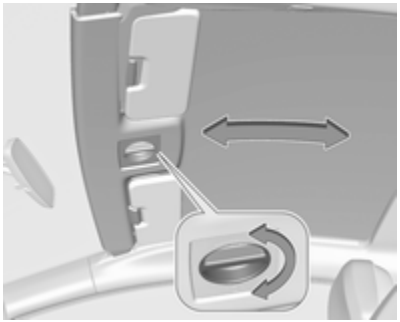

Turn the handle and move the roof cover to a suitable position.

The roof cover engages in position after releasing the handle.

Note
Close the sun visors before sliding the roof lining.

Seats, restraints

Head restraints **39**
Active head restraints 40
Front seats **41**
Seat position 41
Manual seat adjustment 42
Seat folding 44
Power seat adjustment 45
Armrest 47
Heating 47
Rear seats **48**
Armrest 48
Seat belts **48**
Three-point seat belt 49
Airbag system **51**
Front airbag system 52
Side airbag system 52
Curtain airbag system 53
Airbag deactivation 54
Child restraints **55**
Child restraint systems 55
Child restraint installation locations 57

Head restraints

Position

⚠ Warning

Only drive with the head restraint set to the proper position.

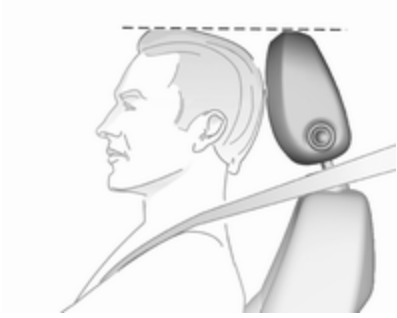

The upper edge of the head restraint should be at upper head level. If this is not possible for extremely tall people, set to highest position, and set to lowest position for small people.

Adjustment

Head restraints on front seats

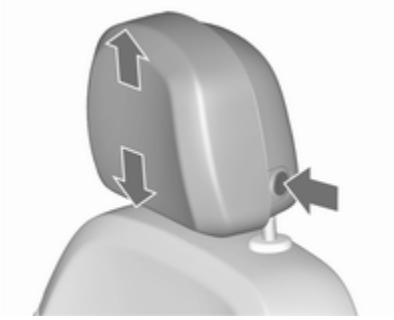

Height adjustment
Press release button, adjust height, engage.

Horizontal adjustment

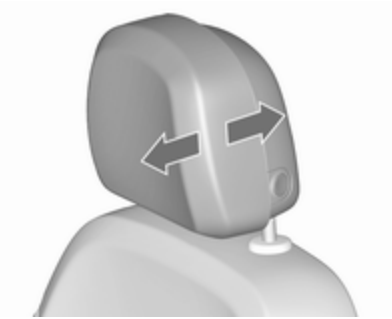

To adjust horizontally, pull the head restraint forwards. It engages in several positions.

To return to its rearmost position, pull fully forwards and release.

Head restraints on rear seats

Height adjustment

Pull the head restraint upwards or press the catch to release and push the head restraint downwards.

Removal

Press both catches, pull the head restraint upwards and remove.

Active head restraints

In the event of a rear-end impact, the front parts of the active head restraints are moved slightly forwards. Thus the head is supported so that the risk of whiplash injury is reduced.

Note
Approved accessories may only be attached if the seat is not in use.

Front seats

Seat position

⚠ Warning

Only drive with the seat correctly adjusted.

⚠ Warning

Never adjust seats while driving as they could move uncontrollably.

⚠ Danger

Do not sit closer than 25 cm to the steering wheel, to permit safe airbag deployment.

⚠ Warning

Never store any objects under the seats.

- Sit with buttocks as far back against the backrest as possible. Adjust the distance between the seat and the pedals so that legs are slightly angled when pressing the pedals. Slide the front passenger seat as far back as possible.
- Set seat height high enough to have a clear field of vision on all sides and of all display instruments. There should be at least one hand of clearance between head and the roof frame. Your thighs should rest lightly on the seat without pressing into it.
- Sit with shoulders as far back against the backrest as possible. Set the backrest rake so that it is possible to easily reach the steering wheel with arms slightly bent. Maintain contact between shoulders and the backrest when turning the steering wheel. Do not angle the backrest too far back. We recommend a maximum rake of approx. 25°.
- Adjust seat and steering wheel in a way that the wrist rests on top of the steering wheel while the arm is fully extended and shoulders on the backrest.
- Adjust the steering wheel ⇨ 73.
- Adjust the head restraint ⇨ 39.
- Adjust the height of the seat belt ⇨ 49.
- Adjust the thigh support so that there is a space approx. two fingers wide between the edge of the seat and the hollow of the knee.
- Adjust the lumbar support so that it supports the natural shape of the spine.

Manual seat adjustment

Drive only with engaged seats and backrests.

Longitudinal adjustment

Pull handle, slide seat, release handle. Try to move the seat back and forth to ensure that the seat is locked in place.

Backrest inclination

Pull lever, adjust inclination and release lever. Allow the backrest to engage audibly.

Seat height

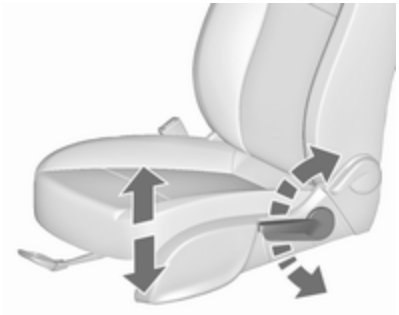

Lever pumping motion

up : seat higher
down : seat lower

Seat inclination

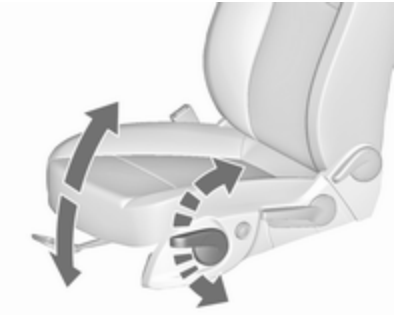

Lever pumping motion

up : front end higher
down : front end lower

Lumbar support

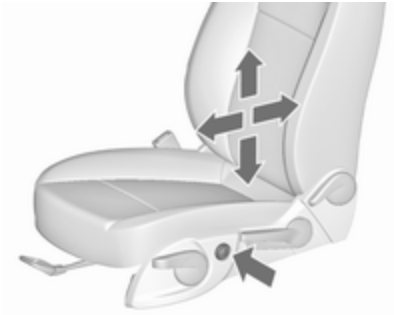

Adjust lumbar support using the four-way switch to suit personal requirements.

Moving support up and down: push switch up or down.

Increasing and decreasing support: push switch forwards or backwards.

Adjustable thigh support

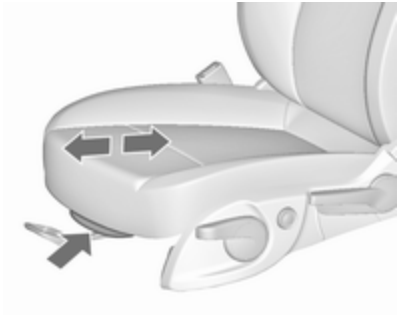

Pull the lever and slide the thigh support.

Side bolster, OPC version

Adjust seat width and backrest width using the switches to suit personal requirements.

Operate front rocker switch to change seat width.

Operate rear rocker switch to change backrest width.

Seat folding

Caution

When seat height is in highest position, push head restraints down and lift up sun visors before folding backrest forwards.

Seat folding on manual operated seats

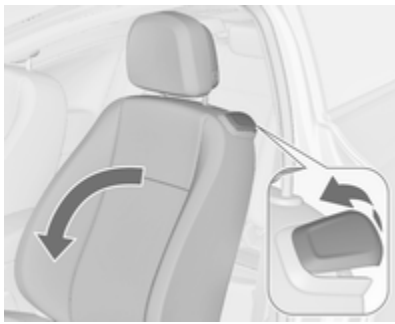

Lift release lever and fold backrest forwards, then slide seat forwards to the stop.

To restore, slide the seat backwards to the stop. Lift backrest to upright position without operating any lever. Ensure backrest engages.

⚠ Warning

When folding up, ensure that the seat is securely locked in position before driving. Failure to do so may result in personal injury in the event of hard braking or collision.

The memory function allows the seat to engage in its original position.

Do not operate backrest inclination lever while backrest is tilted forward.

Vehicles with panorama roof: to tilt backrest forward, push head restraints down and lift up sun visors.

The illustration shows the release lever on OPC seat.

⚠ Warning

To avoid injury, move the backrest to an upright position before folding.

Seat folding on power seats

Lift release lever and fold backrest forwards. The seat slides automatically forwards to the stop.

To restore, lift backrest to upright position and engage. The seat slides automatically backwards to the original position.

In case the head restraint of the folded backrest is blocked by the upper windscreen frame, allow the seat to move backwards slightly before lifting up the backrest ⇨ 45.

Safety function

If the power seat encounters resistance while sliding forward or rearward, it is immediately stopped and moved back.

Overload

If the folding function is electrically overloaded, the power supply is automatically cut-off for a short time.

Power seat adjustment

⚠ Warning

Care must be taken when operating the power seats. There is a risk of injury, particularly for children. Objects could become trapped.

Keep a close watch on the seats when adjusting them. Vehicle passengers should be informed accordingly.

Seat lengthwise position

Move switch forwards/backwards.

Seat height

Move switch upwards/downwards.

Seat inclination

Move front of switch upwards/ downwards.

Seat backrests

Turn switch forwards/backwards.

Lumbar support

Adjust lumbar support using the four-way switch to suit personal requirements.

Moving support up and down: push switch up or down.

Increasing and decreasing support: push switch forwards or backwards.

Adjustable thigh support

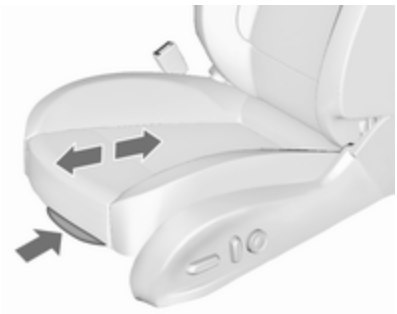

Pull the lever and slide the thigh support.

Overload

If the seat setting is electrically overloaded, the power supply is automatically cut-off for a short time.

Armrest

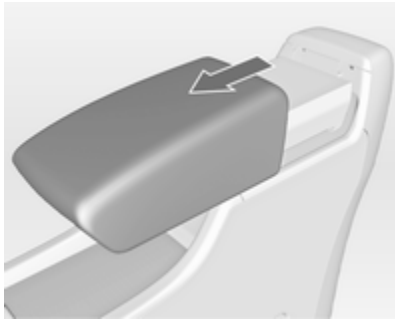

The armrest can be slid forwards by 10 cm. Under the armrest there is a storage compartment.

Armrest storage ⇨ 62.

Heating

Adjust heating to the desired setting by pressing for the respective seat one or more times. The control indicator in the button indicates the setting.

Prolonged use of the highest setting for people with sensitive skin is not recommended.

Seat heating is operational when engine is running and during an Autostop.

Stop-start system ⇨ 142.

Rear seats

Armrest

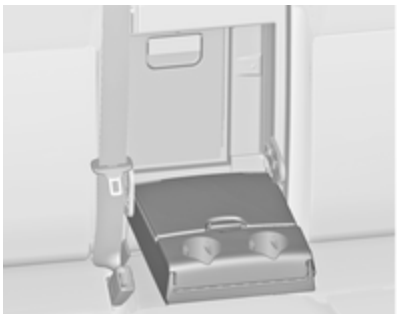

Fold armrest down. The armrest contains cupholders and a storage box.

Seat belts

The seat belts are locked during hard acceleration or deceleration of the vehicle, holding the occupants in the seat position. Therefore the risk of injury is considerably reduced.

⚠ Warning

Fasten seat belt before each trip.

In the event of an accident, people not wearing seat belts endanger their fellow occupants and themselves.

Seat belts are designed to be used by only one person at a time. Child restraint system ⇨ 55.

Periodically check all parts of the belt system for damage, soiling and proper functionality.

Have damaged components replaced. After an accident, have the belts and triggered belt pretensioners replaced by a workshop.

⚠ Warning

The openings in the backrests of the OPC seats are not designed to mount or carry through any kind of additional seat belts.

Note

Make sure that the belts are not damaged by shoes or sharp-edged objects or trapped. Prevent dirt from getting into the belt retractors.

Seat belt reminder

Front seats are equipped with a seat belt reminder, indicated for driver seat by control indicator in the tachometer ⇨ 87 and for passenger seat by the control indicators in the centre console ⇨ 84.

Belt force limiters

On the front seats, stress on the body is reduced by the gradual release of the belt during a collision.

Belt pretensioners

In the event of a head-on or rear-end collision of a certain severity, the front seat belts are tightened.

⚠ Warning

Incorrect handling (e.g. removal or fitting of belts) can trigger the belt pretensioners.

Deployment of the belt pretensioners is indicated by continuous illumination of control indicator ⇨ 87.

Triggered belt pretensioners must be replaced by a workshop. Belt pretensioners can only be triggered once.

Note

Do not affix or install accessories or other objects that may interfere with the operation of the belt pretensioners. Do not make any modifications to belt pretensioner components as this will invalidate the operating permit of your vehicle.

Three-point seat belt

Fasten

Withdraw the belt from the retractor, guide it untwisted across the body and insert the latch plate into the buckle. Tighten the lap belt regularly whilst driving by pulling the shoulder belt.

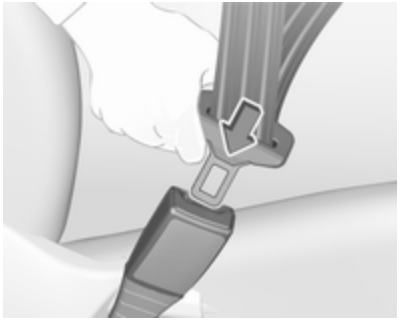

Loose or bulky clothing prevents the belt from fitting snugly. Do not place objects such as handbags or mobile phones between the belt and your body.

⚠Warning

The belt must not rest against hard or fragile objects in the pockets of your clothing.

Seat belt reminder ⇨ 87.

Height adjustment

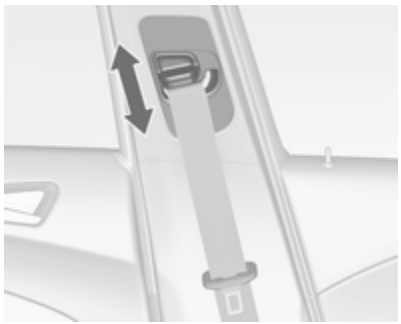

1. Pull belt out slightly.
2. Shift the height adjuster upwards or press button to disengage and push the height adjuster downwards.

Adjust the height so that the belt lies across the shoulder. It must not lie across the throat or upper arm.

Do not adjust while driving.

Unfasten

To release belt, press red button on belt buckle.

Seat belts on the rear seats

The seat belt for the rear centre seat can only be withdrawn from the retractor if the backrest is engaged in upright position.

Using the seat belt while pregnant

⚠ Warning

The lap belt must be positioned as low as possible across the pelvis to prevent pressure on the abdomen.

Airbag system

The airbag system consists of a number of individual systems depending on the scope of equipment.

When triggered, the airbags inflate within milliseconds. They also deflate so quickly that it is often unnoticeable during the collision.

⚠ Warning

The airbag system deploys in an explosive manner, repairs must be performed by skilled personnel only.

⚠ Warning

Adding accessories that change the vehicle's frame, bumper system, height, front end or side sheet metal, may keep the airbag system from working properly. The operation of the airbag system can also be affected by changing any parts of the front seats, seat belts, airbag sensing and diagnostic module, steering wheel, instrument panel, inner door seals including the speakers, any of the airbag modules, ceiling or pillar trim, front sensors, side impact sensors or airbag wiring.

Note

The airbag systems and belt pretensioner control electronics are located in the centre console area. Do not put any magnetic objects in this area.

Do not affix any objects onto the airbag covers and do not cover them with other materials. Have damaged covers replaced by a workshop.

Each airbag is triggered only once. Have deployed airbags replaced by a workshop. Furthermore, it may be necessary to have the steering wheel, the instrument panel, parts of the panelling, the door seals, handles and the seats replaced.

Do not make any modifications to the airbag system as this will invalidate the vehicle operating permit.

Control indicator for airbag systems ⇨ 87.

Front airbag system

The front airbag system consists of one airbag in the steering wheel and one in the instrument panel on the front passenger side. These can be identified by the word **AIRBAG**.

Additionally, there is a warning label on the side of the instrument panel, visible when the front passenger door is open, or on the front passenger sun visor.

The front airbag system is triggered in the event of a front-end impact of a certain severity. The ignition must be switched on.

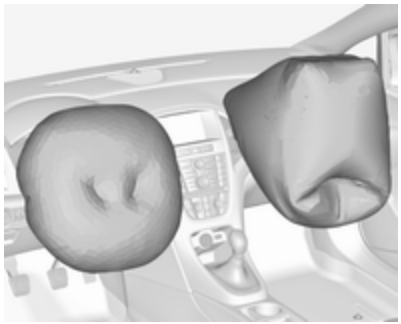

The inflated airbags cushion the impact, thereby reducing the risk of injury to the upper body and head of the front seat occupants considerably.

⚠ Warning

Optimum protection is only provided when the seat is in the proper position.

Seat position ⇨ 41.

Keep the area in which the airbag inflates clear of obstructions.

Fit the seat belt correctly and engage securely. Only then is the airbag able to protect.

Side airbag system

The side airbag system consists of an airbag in each front seat backrest. This can be identified by the word **AIRBAG**.

The side airbag system is triggered in the event of a side impact of a certain severity. The ignition must be switched on.

The inflated airbags cushion the impact, thereby reducing the risk of injury to the upper body and pelvis in the event of a side-on collision considerably.

⚠ Warning

Keep the area in which the airbag inflates clear of obstructions.

Note
Only use protective seat covers that have been approved for the vehicle. Be careful not to cover the airbags.

Curtain airbag system

The curtain airbag system consists of an airbag in the roof frame on each side. This can be identified by the word **AIRBAG** on the roof pillars.

The curtain airbag system is triggered in the event of a side-on impact of a certain severity. The ignition must be switched on.

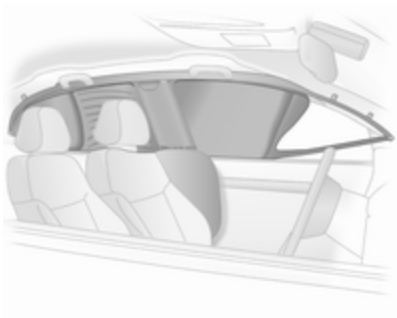

The inflated airbags cushion the impact, thereby reducing the risk of injury to the head in the event of a side-on impact considerably.

⚠ Warning

Keep the area in which the airbag inflates clear of obstructions.

The hooks on the handles in the roof frame are only suitable for hanging up light articles of clothing, without coat hangers. Do not keep any items in these clothes.

Airbag deactivation

The front passenger airbag system must be deactivated if a child restraint system is to be fitted on this seat. The side airbag and curtain airbag systems, the belt pretensioners and all driver airbag systems will remain active.

The front passenger airbag system can be deactivated via a key-operated switch on the passenger side of the instrument panel.

Use the ignition key to choose the position:

OFF : front passenger airbag is deactivated and will not inflate in the event of a collision. Control indicator OFF illuminates continuously in the centre console. A child restraint system can be installed in accordance with the chart **Child restraint installation locations** ⇨ 57. No adult person is allowed to occupy the front passenger seat

ON : front passenger airbag is active. A child restraint system must not be installed

⚠ Danger

Risk of fatal injury for a child using a child restraint system on a seat with activated front passenger airbag.

Risk of fatal injury for an adult person on a seat with deactivated front passenger airbag.

If the control indicator illuminates for approx. 60 seconds after the ignition is switched on, the front passenger airbag system will inflate in the event of a collision.

If both control indicators are illuminated at the same time, there is a system failure. The status of the system is not discernible, therefore no person is allowed to occupy the front passenger seat. Contact a workshop immediately.

Change status only when the vehicle is stopped with the ignition off.

Status remains until the next change.

Control indicator for airbag deactivation ⇨ 87.

Child restraints

Child restraint systems

We recommend the Opel child restraint system which is tailored specifically to the vehicle.

When a child restraint system is being used, pay attention to the following usage and installation instructions and also those supplied with the child restraint system.

Always comply with local or national regulations. In some countries, the use of child restraint systems is forbidden on certain seats.

⚠ Warning

When using a child restraint system on the front passenger seat, the airbag systems for the front passenger seat must be deactivated; if not, the triggering of the airbags poses a risk of fatal injury to the child.

This is especially the case if rear-facing child restraint systems are used on the front passenger seat.

Airbag deactivation ⇨ 54.

Airbag label ⇨ 51.

Selecting the right system

The rear seats are the most convenient location to fasten a child restraint system.

Children should travel facing rearwards in the vehicle as long as possible. This makes sure that the child's backbone, which is still very weak, is under less strain in the event of an accident.

Suitable are restraint systems that comply with valid UN ECE regulations. Check local laws and regulations for mandatory use of child restraint systems.

Ensure that the child restraint system to be installed is compatible with the vehicle type.

Ensure that the mounting location of the child restraint system within the vehicle is correct, see following tables.

Allow children to enter and exit the vehicle only on the side facing away from the traffic.

When the child restraint system is not in use, secure the seat with a seat belt or remove it from the vehicle.

Note
Do not affix anything on the child restraint systems and do not cover them with any other materials.

A child restraint system which has been subjected to stress in an accident must be replaced.

ISOFIX child restraint systems

Fasten vehicle-approved ISOFIX child restraint systems to the ISOFIX mounting brackets. Specific vehicle ISOFIX child restraint system positions are marked in the table by IL.

ISOFIX mounting brackets are indicated by a label on the backrest.

Top-tether anchors

Depending on country specific equipment, the vehicle might have two or three anchors.

Top-Tether anchors are marked with the symbol for a child seat.

On Notchback version, open the flap of the required fastening eye on the placement area behind the head restraints, marked by the child seat symbol.

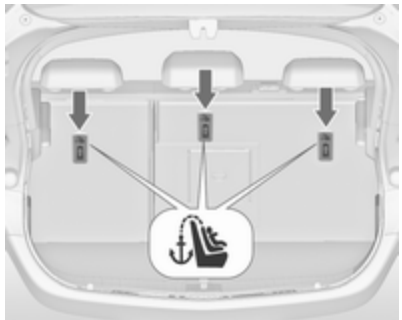

On hatchback version, anchors are on the backside of the rear seats.

In addition to the ISOFIX mounting, fasten the Top-Tether strap to the Top-Tether anchors.

ISOFIX child restraint systems of universal category positions are marked in the table by IUF.

Child restraint installation locations

Permissible options for fitting a child restraint system

Weight class	On front passenger seat activated airbag	On front passenger seat deactivated airbag	On rear outboard seats	On rear centre seat
Group 0: up to 10 kg	X	U[1]	U	U
Group 0+: up to 13 kg	X	U[1]	U	U
Group I: 9 to 18 kg	X	U[1]	U	U
Group II: 15 to 25 kg	X	X	U	U
Group III: 22 to 36 kg	X	X	U	U

[1] : if the child restraint system is being secured using a three-point seat belt, move seat height adjustment to uppermost position and ensure that vehicle seat belt runs forwards from the upper anchorage point. Adjust seat backrest inclination as far as necessary to a vertical position to ensure that the belt is tight on the buckle side.

U : universal suitability in conjunction with three-point seat belt.

X : no child restraint system permitted in this weight class.

Permissible options for fitting an ISOFIX child restraint system

Weight class	Size class	Fixture	On front passenger seat	On rear outboard seats	On rear centre seat
Group 0: up to 10 kg	E	ISO/R1	X	IL	X
Group 0+: up to 13 kg	E	ISO/R1	X	IL	X
	D	ISO/R2	X	IL	X
	C	ISO/R3	X	IL	X
Group I: 9 to 18 kg	D	ISO/R2	X	IL	X
	C	ISO/R3	X	IL	X
	B	ISO/F2	X	IL, IUF	X
	B1	ISO/F2X	X	IL, IUF	X
	A	ISO/F3	X	IL, IUF	X
Group II: 15 to 25 kg			X	IL	X
Group III: 22 to 36 kg			X	IL	X

IL : suitable for particular ISOFIX restraint systems of the 'specific-vehicle', 'restricted' or 'semi-universal' categories. The ISOFIX restraint system must be approved for the specific vehicle type.
IUF : suitable for ISOFIX forward-facing child restraint systems of universal category approved for use in this weight class.
X : no ISOFIX child restraint system approved in this weight class.

ISOFIX size class and seat device

A – ISO/F3 : forward-facing child restraint system for children of maximum size in the weight class 9 to 18 kg
B – ISO/F2 : forward-facing child restraint system for smaller children in the weight class 9 to 18 kg

B1 – ISO/F2X	:	forward-facing child restraint system for smaller children in the weight class 9 to 18 kg
C – ISO/R3	:	rear-facing child restraint system for children of maximum size in the weight class up to 18 kg
D – ISO/R2	:	rear-facing child restraint system for smaller children in the weight class up to 18 kg
E – ISO/R1	:	rear-facing child restraint system for young children in the weight class up to 13 kg

Storage

Storage compartments **60**
Glovebox 60
Cupholders 60
Front storage 61
Underseat storage 62
Armrest storage 62
Centre console storage 63
Load compartment **64**
Rear storage 66
Load compartment cover 66
Rear floor storage cover 67
Lashing eyes 68
Warning triangle 69
First aid kit 69
Roof rack system **70**
Roof rack 70
Loading information **70**

Storage compartments

⚠ Warning

Do not store heavy or sharp objects in the storage compartments. Otherwise, the storage compartment lid could open and vehicle occupants could be injured by objects being thrown around in the event of hard braking, a sudden change in direction or an accident.

Glovebox

The glovebox features a pen holder, a credit card holder, a coin holder and an adapter for the locking wheel nuts.

The glovebox should be closed whilst driving.

Cupholders

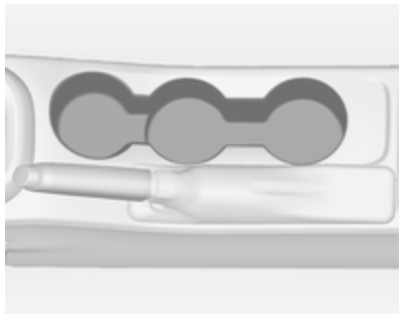

Cupholders are located in the centre console.

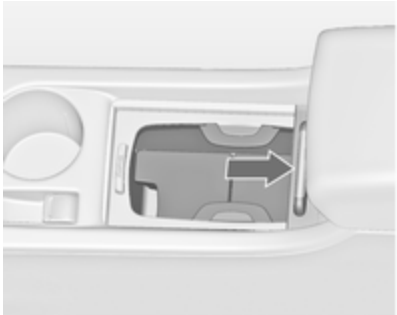

Depending on the version, cupholders are located under a cover in the centre console. Slide cover backwards. Bottles can be stowed after folding up the intermediate shelf ⇨ 63.

Additional cupholders are located in the rear armrest. Fold down the armrest.

Front storage

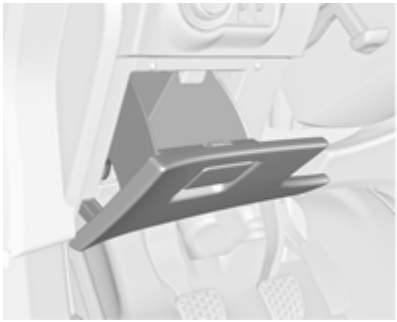

A storage compartment is located next to the steering wheel.

Underseat storage

Press button in the recess and pull out drawer. Maximum load: 3 kg. To close, push in and engage.

Armrest storage

Storage under the front armrest

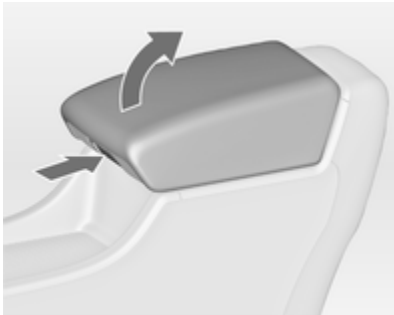

Press button to fold up the armrest. The armrest must be in rearmost position.

Storage in the rear armrest

Fold down armrest and open cover.

Close cover before folding the armrest up.

Centre console storage

Front console

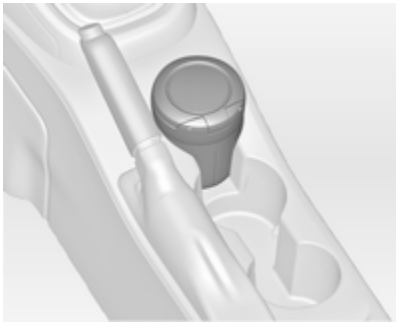

The storage container can be used to store small items.

Depending on the version, a storage compartment is located under a cover.

Slide cover backwards.

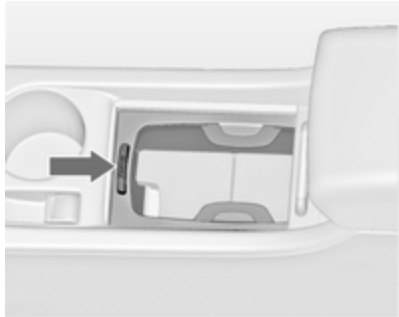

Press button to remove the frame of the cupholder. The frame can be stowed in the glovebox.

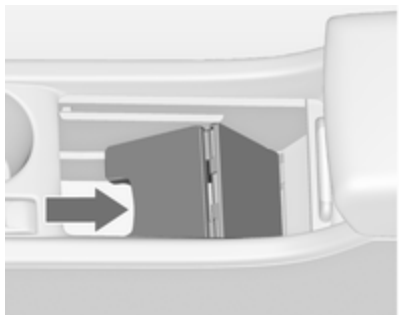

A further storage compartment is located under the intermediate shelf. Fold up the intermediate shelf and fix it in the vertical position. The frame of the cupholder can be reintegrated to stow bottles.

Rear console

Pull out the drawer.

Caution
Do not use for ash or for other combustible items.

Load compartment

The rear seat backrest is divided into two parts. Both parts can be folded down.

Load compartment extension

- Only 3-door hatchback: remove the load compartment cover if necessary.
- Press and hold the catch to push the head restraints down ⇨ 39.
- Fold up the rear armrest.

- Guide the seat belts through side supports to protect them against damage. When folding the backrests, pull the seat belts along with them.
- Pull the release lever on one or both sides and fold down the backrests onto the seat cushion.

- Take the seat belt out of the seat backrest guide and put it behind the retainer as shown in the illustration.

To fold up, raise the backrests and guide them into an upright position until they engage audibly.

Ensure that the seat belts of the outboard seats are placed in the corresponding belt guides.

The backrests are properly engaged when the red marks on both sides near the release lever are no longer visible.

⚠ Warning

When folding up, ensure that backrests are securely locked in position before driving. Failure to do so may result in personal injury

or damage to the load or vehicle in the event of hard braking or a collision.

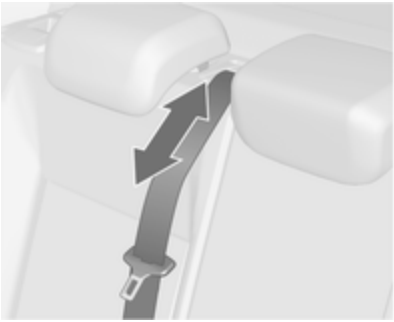

The seat belt of the centre seat could be blocked when the backrest is folded up too quickly. To unlock the retractor, push in the seat belt or pull it out by approx. 20 mm then release.

Open the pass-through in the rear centre backrest

- Fold down the rear armrest.

- Pull the grip and open the cover.

Suitable for loading long, narrow objects.

Ensure that the cover engages after folding up.

The closed cover can be secured from the side of the load compartment. Turn the knob 90°:

knob horizontal : cover secured from the side of the passenger compartment

knob vertical : cover not secured

Rear storage

3-door hatchback

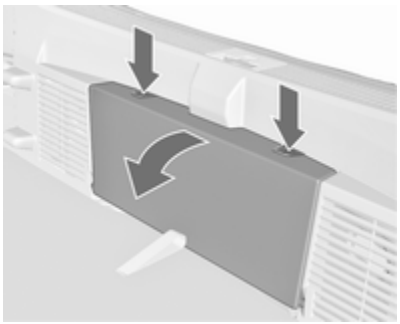

Press both buttons and fold down cover.

Maximum load: 0.5 kg.

Load compartment cover

Do not place any objects on the cover.

3-door hatchback

Removing

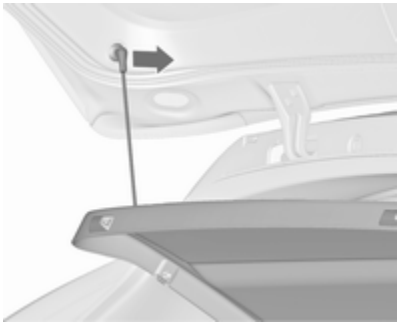

Unhook retaining straps from tailgate.

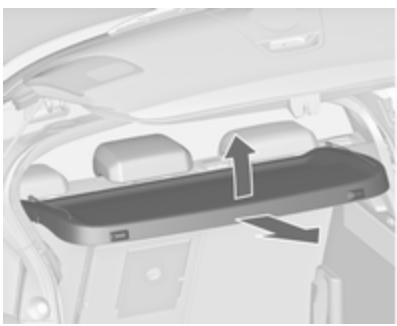

Lift cover at the rear and push it upwards at the front.

Remove the cover.

If the height adjustable cover is mounted in the middle or upper position, the load compartment cover can be stowed below it.

Height adjustable cover ⇨ 67.

Fitting

Engage cover in side guides and fold downwards. Attach retaining straps to tailgate.

Rear floor storage cover

Rear floor cover, 3-door hatchback

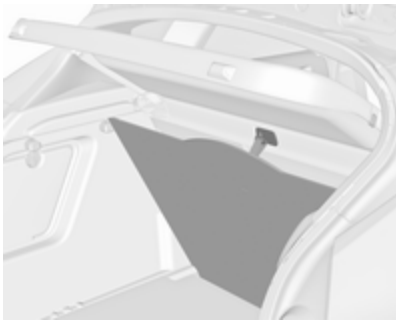

The rear floor cover can be lifted. Hang the loop on the hook on the lower side of the load compartment cover.

Caution
Only use the hook for hanging up the rear floor cover and the height adjustable cover.

Height adjustable cover, 3-door hatchback

The height adjustable cover can be mounted in three positions:

- directly above the rear floor cover (**1**)
- in a middle position (**2**)
- in an upper position (**3**)

Caution
Ensure that the front and rear end of the height adjustable cover are attached at the same level.

Lifting

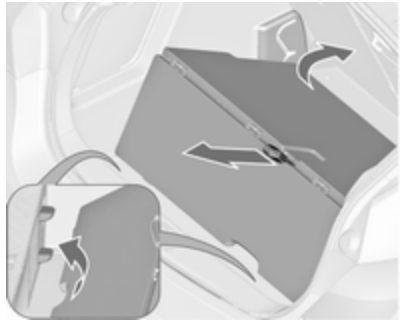

To lift the cover to a higher level, pull the loop backwards and lift the rear edge of the cover onto the corresponding supports.

Lowering

To lower the cover, pull the strap backwards and push down the front centre of the cover at the same time.

Caution
Do not lower the height adjustable cover to position **1** in vehicles equipped with subwoofer. The subwoofer could be damaged.

Note

- If mounted in position **2** or **3**, the space between the rear floor cover and the height adjustable cover can be used as a stowage compartment.
- The height adjustable cover can be lifted and hooked in with the strap when it is mounted in position **1** or **2**.
- If mounted in position **2**, an almost completely flat load-bay is created if the rear seat backrests are folded forwards.
- Opening the side covers (e.g. when exchanging the rear light bulbs) is only possible with the height adjustable cover mounted in position **1** or **2**.

Caution
The height adjustable cover is able to withstand a load of no more than 100 kg.

Lashing eyes

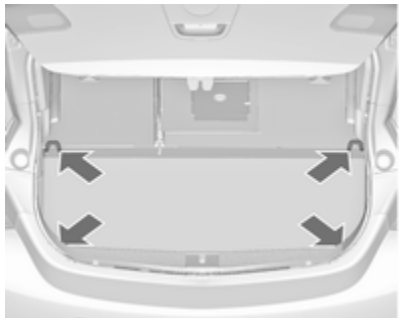

The lashing eyes are designed to secure items against slippage, e.g. using lashing straps or luggage net.

The lashing eyes are only accessible if the rear floor storage cover is in the lower position ⇨ 67.

Warning triangle

3-door hatchback

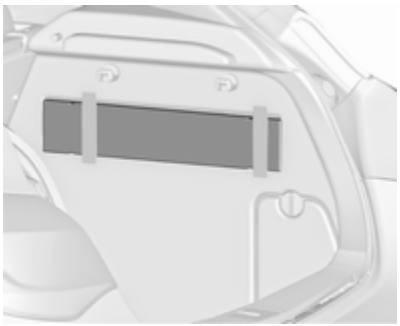

Stow the warning triangle in the space behind the strap on the right side of the load compartment.

4-door notchback

Stow the warning triangle in the recess on the left side of the load compartment.

First aid kit

3-door hatchback

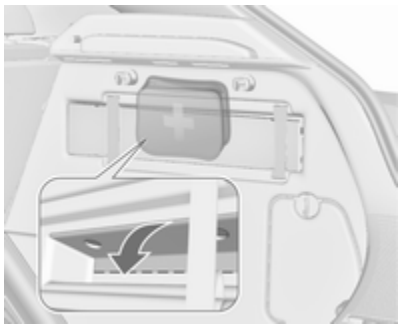

Stow the first aid kit in the stowage compartment behind the warning triangle.

Use the recesses to fold down the cover.

Depending on the equipment, the first aid kit can be stored in the rear storage compartment ⇨ 66.

4-door notchback

Stow the first aid kit in the space behind the mesh net on the right side of the load compartment.

Roof rack system

Roof rack

For safety reasons and to avoid damage to the roof, the vehicle approved roof rack system is recommended. For further information contact your workshop.

Follow the installation instructions and remove the roof rack when not in use.

Mounting roof rack

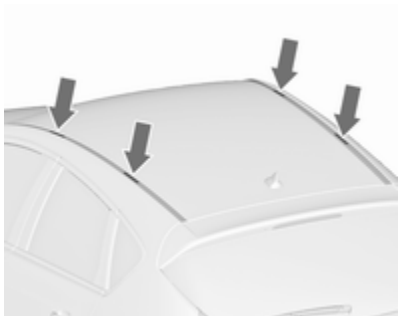

Detach the cover from each mounting point by using a coin.

Loading information

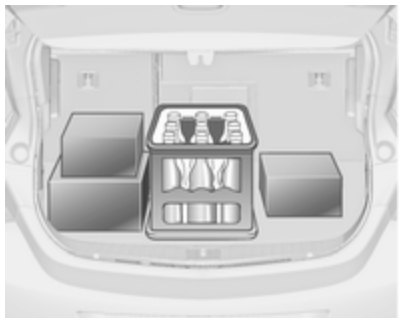

- Heavy objects in the load compartment should be placed against the seat backrests. Ensure that the backrests are securely engaged. If objects can be stacked, heavier objects should be placed at the bottom.
- Secure objects with lashing straps attached to the lashing eyes ⇨ 68. Attach the height adjustable cover in the lowest position **(1)** ⇨ 67.

- Use the four hooks on the sidewalls of the load compartment for hanging up carrier bags. Maximum load: 5 kg per hook.
- Secure loose objects in the load compartment to prevent them from sliding.
- When transporting objects in the load compartment, the backrests of the rear seats must not be angled forward.
- Do not allow the load to protrude above the upper edge of the backrests.
- Do not place any objects on the load compartment cover or the instrument panel, and do not cover the sensor on top of the instrument panel.
- The load must not obstruct the operation of the pedals, parking brake and selector lever, or hinder the freedom of movement of the driver. Do not place any unsecured objects in the interior.
- Do not drive with an open load compartment.

⚠ Warning

Always make sure that the load in the vehicle is securely stowed. Otherwise objects can be thrown around inside the vehicle and cause personal injury or damage to the load or car.

- The payload is the difference between the permitted gross vehicle weight (see identification plate ⇨ 257) and the EC kerb weight.

  To calculate the payload, enter the data for your vehicle in the weights table at the front of this manual.

  The EC kerb weight includes weights for the driver (68 kg), luggage (7 kg) and all fluids (fuel tank 90% full).

  Optional equipment and accessories increase the kerb weight.
- Driving with a roof load increases the sensitivity of the vehicle to cross-winds and has a detrimental effect on vehicle handling due to the vehicle's higher centre of gravity. Distribute the load evenly and secure it properly with retaining straps. Adjust the tyre pressure and vehicle speed according to the load conditions. Check and retighten the straps frequently.

  Do not drive faster than 120 km/h.

  The permissible roof load is 75 kg. The roof load is the combined weight of the roof rack and the load.

Instruments and controls

Controls **73**
Steering wheel adjustment 73
Steering wheel controls 73
Heated steering wheel 73
Horn 74
Windscreen wiper/washer 74
Rear window wiper/washer 76
Outside temperature 76
Clock 77
Power outlets 78
Cigarette lighter 79
Ashtrays 79
Warning lights, gauges and indicators **80**
Instrument cluster 80
Speedometer 80
Odometer 80
Trip odometer 80
Tachometer 80
Fuel gauge 81
Fuel selector 81
Engine coolant temperature gauge 83
Service display 83
Control indicators 84
Turn signal 87
Seat belt reminder 87
Airbag and belt tensioners 87
Airbag deactivation 87
Charging system 88
Malfunction indicator light 88
Service vehicle soon 88
Brake and clutch system 88
Operate pedal 88
Electric parking brake 88
Electric parking brake fault 89
Antilock brake system (ABS) 89
Upshift 89
Power steering 89
Lane departure warning 89
Ultrasonic parking assist 90
Electronic Stability Control off ... 90
Electronic Stability Control and Traction Control system 90
Traction Control system off 90
Preheating 90
Diesel particle filter 90
Tyre pressure monitoring system 91
Engine oil pressure 91
Low fuel 91
Immobiliser 92
Reduced engine power 92
Exterior light 92
High beam 92
High beam assist 92
Adaptive forward lighting 92
Fog light 92
Rear fog light 92
Low washer fluid 92
Cruise control 92
Adaptive cruise control 92
Vehicle detected ahead 93
Door open 93
Information displays **93**
Driver Information Centre 93
Graphic-Info-Display, Colour-Info-Display 97
Smartphone controller 99
Vehicle messages **99**
Warning chimes 102
Battery voltage 102
Trip computer **103**
Vehicle personalisation **105**
Telematics service **110**
OnStar 110
ERA GLONASS 113

Controls

Steering wheel adjustment

Unlock lever, adjust steering wheel, then engage lever and ensure it is fully locked.

Do not adjust steering wheel unless vehicle is stationary and steering wheel lock has been released.

Steering wheel controls

The Infotainment system, the cruise control and a connected mobile phone can be operated via the controls on the steering wheel.

Further information is available in the Infotainment manual.

Driver assistance systems ⇨ 159.

Heated steering wheel

Activate heating by pressing ♨. Activation is indicated by illumination of the LED in the button.

The recommended grip areas of the steering wheel are heated quicker and to a higher temperature than the other areas.

Heating is operational when the engine is running and during an Autostop.

Stop-start system ⇨ 142.

Horn

Press ⚑.

Windscreen wiper/washer

Windscreen wiper

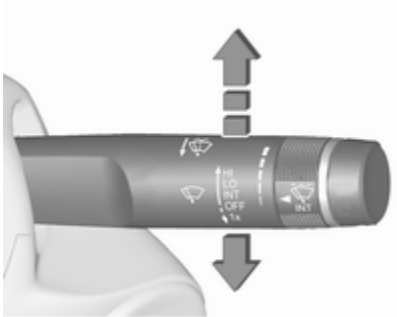

HI : fast
LO : slow
INT : interval wiping or automatic wiping with rain sensor
OFF : off

For a single wipe when the windscreen wiper is off, press the lever down to position **1x**.

Do not use if the windscreen is frozen.

Switch off in car washes.

Adjustable wiper interval

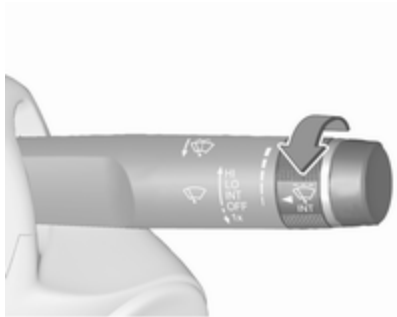

Wiper lever in position **INT**.

Turn the adjuster wheel to adjust the desired wipe interval:

short interval : turn adjuster wheel upwards
long interval : turn adjuster wheel downwards

Automatic wiping with rain sensor

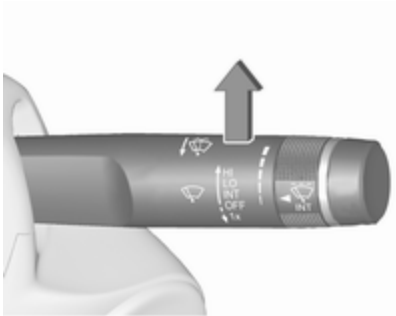

INT : automatic wiping with rain sensor

The rain sensor detects the amount of water on the windscreen and automatically regulates the frequency of the windscreen wiper.

If the wiper frequency is above 20 seconds, the wiper arm moves slightly down to the park position.

Adjustable sensitivity of the rain sensor

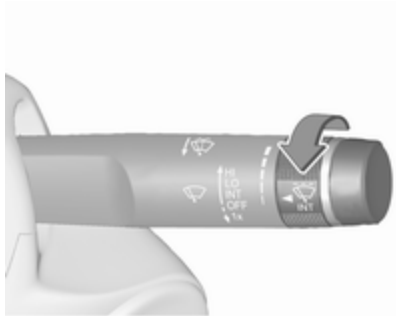

Turn the adjuster wheel to adjust the sensitivity:

low sensitivity : turn adjuster wheel downwards

high sensitivity : turn adjuster wheel upwards

Keep the sensor free from dust, dirt and ice.

Windscreen and headlight washer

Pull lever. Washer fluid is sprayed onto the windscreen and the wiper wipes a few times.

If the headlights are on, washer fluid is also sprayed onto the headlights, provided that the lever is pulled sufficiently long. Afterwards, the headlight washer system is inoperable for 5 wash cycles or until engine or headlights have been switched off and on again.

Rear window wiper/washer

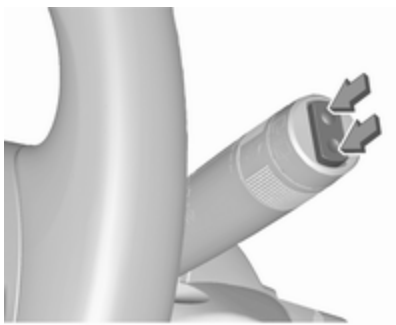

Press the rocker switch to activate the rear window wiper:

upper position : continuous operation
lower position : intermittent operation
middle position : off

Push lever. Washer fluid is sprayed onto the rear window and the wiper wipes a few times.

Do not use if the rear window is frozen.

Switch off in car washes.

The rear window wiper comes on automatically when the windscreen wiper is switched on and reverse gear is engaged.

Activation or deactivation of this function can be changed in the Settings menu in the Info-Display.

Vehicle personalisation ⇨ 105.

The rear window washer system is deactivated when the fluid level is too low.

Outside temperature

20153

A drop in temperature is indicated immediately and a rise in temperature after a time delay.

If outside temperature drops to 3 °C, a warning message is displayed in the Driver Information Centre with Uplevel-Combi-Display.

⚠ Warning
The road surface may already be icy even though the display indicates a few degrees above 0 °C.

Clock

Date and time are shown in the Info-Display.

Time and date settings

CD 400plus/CD 400/CD 300

Press **CONFIG**. The menu **Settings** is displayed.

Select **Time Date**.

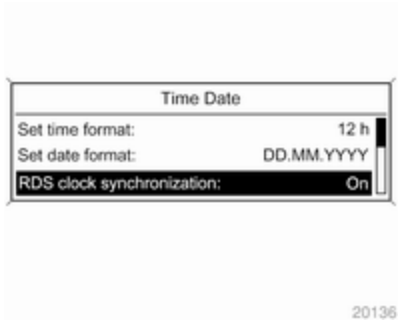

Selectable setting options:

- **Set time:** Changes the time shown on the display.
- **Set date:** Changes the date shown on the display.
- **Set time format**: Changes indication of hours between **12 h** and **24 h**.
- **Set date format**: Changes indication of date between **MM/DD/YYYY** and **DD.MM.YYYY**.
- **Display clock**: Switches on/off indication of time on the display.
- **RDS clock synchronization**: The RDS signal of most VHF transmitters automatically sets the time. RDS time synchronisation can take a few minutes. Some transmitters do not send a correct time signal. In such cases, it is recommended to switch off automatic time synchronisation.

Vehicle personalisation ⇨ 105.

Time and date settings

Navi 950/Navi 650/CD 600

Press **CONFIG** and then select the **Time and Date** menu item to display the respective submenu.

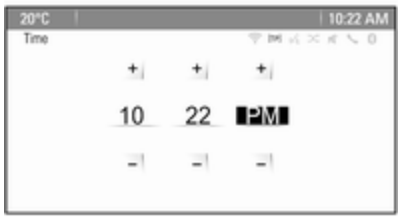

Note
If **RDS Auto Time Adjust** is activated, time and date are automatically set by the system.

See Infotainment manual for further information.

Set time
To adjust the time settings, select the **Set Time** menu item. Turn the multifunction knob to adjust the first setting.

Press the multifunction knob to confirm the input. The coloured background moves to the next setting.

Adjust all settings.

Set date
To adjust the time settings, select the **Set Date** menu item. Turn the multifunction knob to adjust the first setting.

Press the multifunction knob to confirm the input. The coloured background moves to the next setting.

Adjust all settings.

Time format
To choose the desired time format, select **12 hr / 24 hr Format**. Activate **12 Hour** or **24 Hour**.

Vehicle personalisation ⇨ 105.

Power outlets

A 12 Volt power outlet is located in the front console.

A further 12 Volt power outlet is located in the rear console. Fold the cover downwards.

Do not exceed the maximum power consumption of 120 watts.

With ignition off, the power outlets are deactivated. Additionally, the power outlets are deactivated in the event of low vehicle battery voltage.

Electric accessories that are connected must comply with the electromagnetic compatibility requirements laid down in DIN VDE 40 839.

Do not connect any current-delivering accessories, e.g. electric charging devices or batteries.

Do not damage the outlet by using unsuitable plugs.

Stop-start system ⇨ 142.

Cigarette lighter

The cigarette lighter is located in the front console.

Press in cigarette lighter. It switches off automatically once the element is glowing. Pull out lighter.

Ashtrays

Caution
To be used only for ash and not for combustible rubbish.

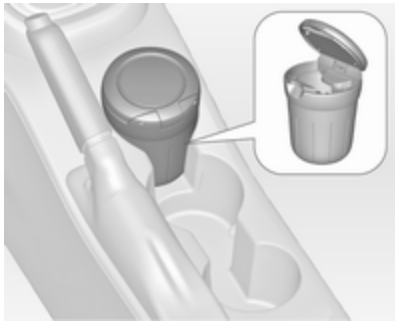

The portable ashtray can be placed in the cupholders.

Warning lights, gauges and indicators

Instrument cluster

In some versions, the needles of the instruments briefly rotate to the end position when the ignition is switched on.

Speedometer

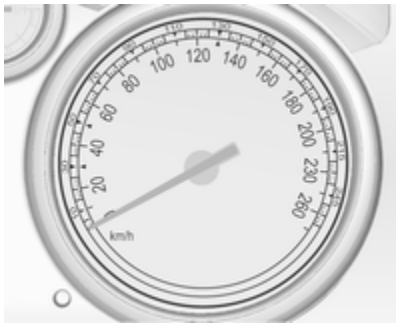

Indicates vehicle speed.

Odometer

The bottom line displays the recorded distance in km.

Trip odometer

The top line displays the recorded distance since the last reset.

To reset, press **SET/CLR** on the turn signal lever for a few seconds ⇨ 93.

Some versions are equipped with a reset knob between speedometer and Driver Information Centre: to reset press and hold the knob for a few seconds with the ignition on.

Trip odometer counts up to a distance of 2000 km and then restarts at 0.

Tachometer

Displays the engine speed.

Drive in a low engine speed range for each gear as much as possible.

Caution
If the needle is in the red warning zone, the maximum permitted engine speed is exceeded. Engine at risk.

Fuel gauge

Displays the fuel level or gas level in the tank depending on the operation mode.

Control indicator ⬬ illuminates if the level in the tank is low. Refuel immediately if it flashes.

During liquid gas operation, the system automatically switches over to petrol operation when gas tanks are empty ⇨ 81.

Never run the tank dry.

Because of the fuel remaining in the tank, the top-up quantity may be less than the specified tank capacity.

Fuel selector

Pressing **LPG** switches between petrol and liquid gas operation as soon as the required parameters (coolant temperature, gas temperature and minimum engine speed) have been reached. The requirements are usually fulfilled after around 60 seconds (depending on exterior temperature) and the first firm press on the accelerator. The LED status shows the current operating mode.

⬬ off	:	petrol operation
⬬ flashes	:	checking conditions for fuel transition to liquid gas operation. Illuminates if conditions are fulfilled.
⬬ illuminates	:	liquid gas operation
⬬ flashes 5 times and extinguishes	:	liquid gas tank is empty or failure in liquid gas system. A message is displayed in the Driver Information Centre.

If the fuel tank is empty, the engine will not start.

The selected fuel mode is stored and reactivated at the next ignition cycle if conditions allow.

As soon as the liquid gas tanks are empty, petrol operation is automatically engaged until the ignition is switched off.

When switching automatically between petrol or gas operation, a brief delay of engine tractive power may be noticeable.

Every six months, run the petrol tank down until control indicator ⬬ illuminates, then refuel. This helps maintain fuel quality and system function for petrol operation.

Fill the tank completely at regular intervals to prevent corrosion in the tank.

Faults and remedies

If gas mode is not possible, check the following:

- Is there enough liquid gas present?
- Is there enough petrol present for starting?

Due to extreme temperatures in combination with the gas composition, it may take slightly longer before the system switches from petrol to gas mode.

In extreme situations, the system may also switch back to petrol mode if the minimum requirements are not fulfilled. If conditions allow, it might be possible to manually switch back to liquid gas operation.

Seek the assistance of a workshop in the event of all other faults.

Caution

Repairs and adjustments may only be made by trained specialists in order to maintain the safety and warranty on the LPG system.

Liquid gas is given a particular odour (odorised) so that any leaks can be detected easily.

⚠ Warning

If you smell gas in the vehicle or in the immediate vicinity, switch to petrol mode immediately. No smoking. No naked flames or ignition sources.

If possible, close the manual shut-off valve on the multivalve. The multivalve is located on the liquid gas tank in the load compartment, underneath the rear floor cover.

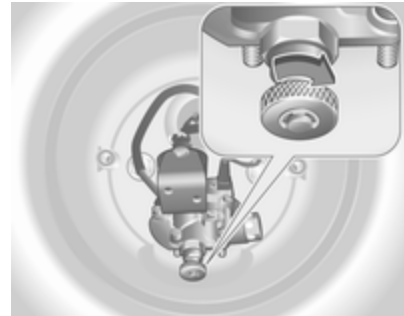

Turn the thumb wheel clockwise.

If no further gas odour is perceptible when the manual shut-off valve is closed, the vehicle can be used in petrol mode. If the gas odour persists, do not start the engine. Have the cause of the fault remedied by a workshop.

When using underground car parks, follow the instructions of the operator and local laws.

Note
In the event of an accident, switch off the ignition and lights. Close the manual shut-off valve on multivalve.

Fuel for liquid gas operation ⇨ 190.

Engine coolant temperature gauge

Displays the coolant temperature.

left area	:	engine operating temperature not yet reached
central area	:	normal operating temperature
right area	:	temperature too high

Caution

If engine coolant temperature is too high, stop vehicle, switch off engine. Danger to engine. Check coolant level.

Service display

The engine oil life system lets you know when to change the engine oil and filter. Based on driving conditions, the interval at which an engine oil and filter change will be indicated can vary considerably.

To display the remaining engine oil life duration use turn signal lever buttons:

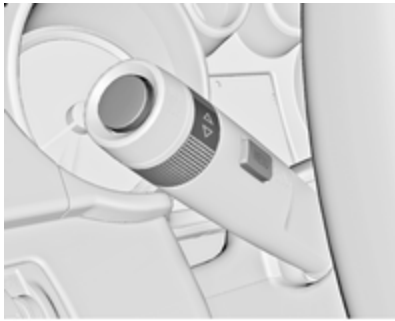

Press **MENU** to select the **Vehicle Information Menu** .

Turn the adjuster wheel to select **Remaining Oil Life**.

The remaining engine oil life duration is displayed in percent in the Driver Information Centre.

Reset

Press **SET/CLR** on turn signal lever for several seconds to reset. The remaining engine oil life duration page must be active. Switch on ignition, but not the engine.

The system must be reset every time the engine oil is changed, to ensure proper functionality. Seek the assistance of a workshop.

Next service

When the system has calculated that engine oil life has diminished, a warning message appears in the Driver Information Centre. Have engine oil and filter changed by a workshop within one week or 500 km (whichever occurs first).

Driver Information Centre ⇨ 93.

Service information ⇨ 253.

Control indicators

The control indicators described are not present in all vehicles. The description applies to all instrument versions. Depending on the equipment, the position of the control indicators may vary. When the ignition is switched on, most control indicators will illuminate briefly as a functionality test.

The control indicator colours mean:

red : danger, important reminder
yellow : warning, information, fault
green : confirmation of activation
blue : confirmation of activation
white : confirmation of activation

Control indicators in the instrument cluster

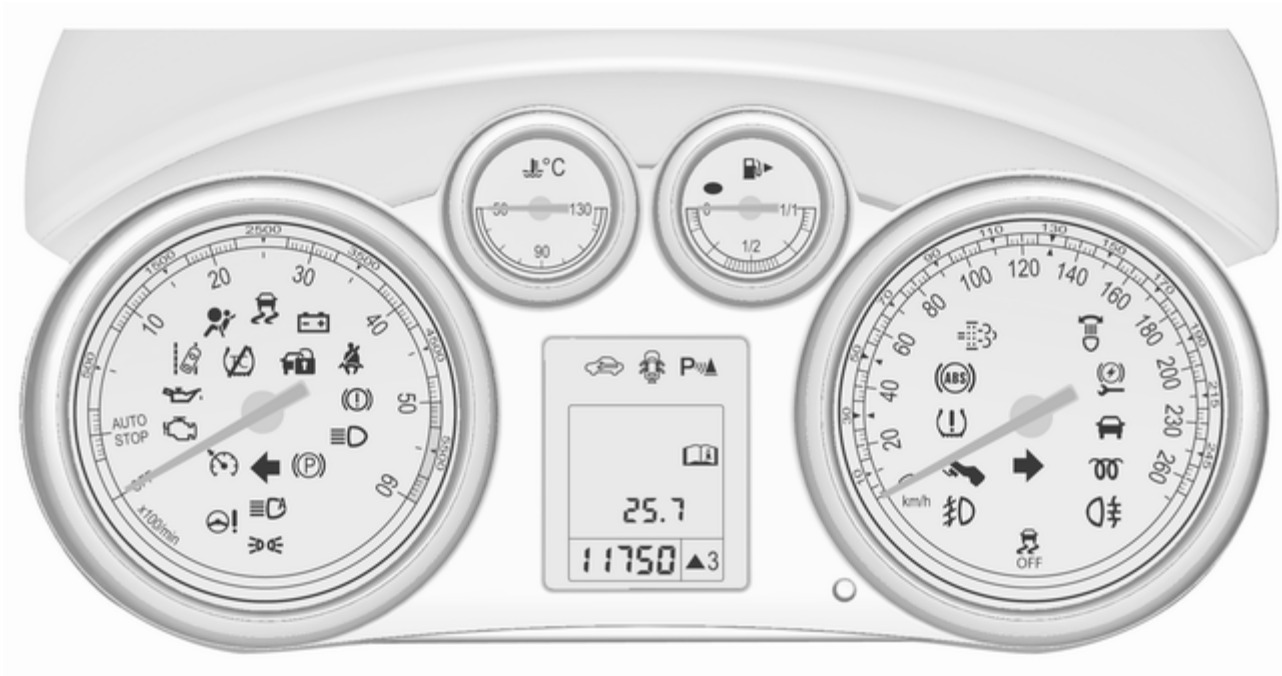

Control indicators in the centre console

Overview

- Turn signal ⇨ 87
- Seat belt reminder ⇨ 87
- Airbag and belt tensioners ⇨ 87
- Airbag deactivation ⇨ 87
- Charging system ⇨ 88
- Malfunction indicator light ⇨ 88
- Service vehicle soon ⇨ 88
- Brake and clutch system ⇨ 88
- Operate pedal ⇨ 88
- Electric parking brake ⇨ 88
- Electric parking brake fault ⇨ 89
- Antilock brake system (ABS) ⇨ 89
- Upshift ⇨ 89
- Power steering ⇨ 89
- Lane departure warning ⇨ 89
- Ultrasonic parking assist ⇨ 90
- Electronic Stability Control off ⇨ 90
- Electronic Stability Control and Traction Control system ⇨ 90
- Traction Control system off ⇨ 90
- Preheating ⇨ 90
- Diesel particle filter ⇨ 90
- Tyre pressure monitoring system ⇨ 91
- Engine oil pressure ⇨ 91
- Low fuel ⇨ 91
- Immobiliser ⇨ 92
- Reduced engine power ⇨ 92
- Exterior light ⇨ 92
- High beam ⇨ 92
- High beam assist ⇨ 92
- Adaptive forward lighting ⇨ 92
- Fog light ⇨ 92
- Rear fog light ⇨ 92
- Low washer fluid ⇨ 92
- Cruise control ⇨ 92 / Adaptive cruise control ⇨ 92
- Vehicle detected ahead ⇨ 93
- Door open ⇨ 93

Turn signal

⇦⇨ illuminates or flashes green.

Illuminates briefly

The parking lights are switched on.

Flashes

A turn signal or the hazard warning flashers are activated.

Rapid flashing: failure of a turn signal light or associated fuse, failure of turn signal light on trailer.

Bulb replacement ⇨ 208, Fuses ⇨ 222.

Turn signals ⇨ 123.

Seat belt reminder

Seat belt reminder on front seats

for driver's seat illuminates or flashes red.

2 for front passenger seat illuminates or flashes red, when the seat is occupied.

Illuminates
After the ignition has been switched on until the seat belt has been fastened.

Flashes
After having started the engine for a maximum of 100 seconds until the seat belt has been fastened.

Airbag and belt tensioners

illuminates red.

When the ignition is switched on, the control indicator illuminates for approx. four seconds. If it does not illuminate, does not go out after four seconds or illuminates whilst driving, there is a fault in the airbag system. Seek the assistance of a workshop. The airbags and belt pretensioners may fail to trigger in the event of an accident.

Deployment of the belt pretensioners or airbags is indicated by continuous illumination of .

⚠ Warning

Have the cause of the fault remedied immediately by a workshop.

Belt pretensioners, airbag system ⇨ 48, ⇨ 51.

Airbag deactivation

2 illuminates yellow.

Illuminates for approx. 60 seconds after the ignition is switched on. The front passenger airbag is activated.

2 illuminates yellow.

The front passenger airbag is deactivated ⇨ 54.

⚠ Danger

Risk of fatal injury for a child using a child restraint system together with activated front passenger airbag.

Risk of fatal injury for an adult person with deactivated front passenger airbag.

Charging system

illuminates red.

Illuminates when the ignition is switched on and extinguishes shortly after the engine starts.

Illuminates when the engine is running

Stop, switch off engine. Vehicle battery is not charging. Engine cooling may be interrupted. The brake servo unit may cease to be effective. Seek the assistance of a workshop.

Malfunction indicator light

illuminates or flashes yellow.

Illuminates when the ignition is switched on and extinguishes shortly after the engine starts.

Illuminates when the engine is running

Fault in the emission control system. The permitted emission limits may be exceeded. Seek the assistance of a workshop immediately.

Flashes when the engine is running

Fault that could lead to catalytic converter damage. Ease up on the accelerator until the flashing stops. Seek the assistance of a workshop immediately.

Service vehicle soon

illuminates yellow.

Additionally, a warning message or a warning code is displayed.

The vehicle needs a service.

Seek the assistance of a workshop.

Vehicle messages ⇨ 99.

Brake and clutch system

illuminates red.

The brake and clutch fluid level is too low ⇨ 205.

⚠ Warning
Stop. Do not continue your journey. Consult a workshop.

Illuminates after the ignition is switched on if the manual parking brake is applied ⇨ 153.

Operate pedal

illuminates or flashes yellow.

Illuminates

Brake pedal needs to be depressed to release the electric parking brake ⇨ 153.

Clutch pedal needs to be depressed to start the engine in Autostop mode. Stop-start system ⇨ 142.

Flashes

Clutch pedal needs to be depressed for a main start of the engine ⇨ 19, ⇨ 141.

On some versions the operate pedal message is indicated in the Driver Information Centre ⇨ 99.

Electric parking brake

(P) illuminates or flashes red.

Illuminates

Electric parking brake is applied ⇨ 153.

Flashes

Electric parking brake is not fully applied or released. Switch on ignition, depress brake pedal and attempt to reset the system by first releasing and then applying the electric parking brake. If Ⓟ remains flashing, do not drive and seek the assistance of a workshop.

Electric parking brake fault

illuminates or flashes yellow.

Illuminates

Electric parking brake is operating with reduced performance ⇨ 153.

Flashes

Electric parking brake is in service mode. Stop vehicle, apply and release the electric parking brake to reset.

⚠Warning

Have the cause of the fault remedied immediately by a workshop.

Antilock brake system (ABS)

(ABS) illuminates yellow.

Illuminates for a few seconds after the ignition is switched on. The system is ready for operation when the control indicator extinguishes.

If the control indicator does not go out after a few seconds, or if it illuminates while driving, there is a fault in the ABS. The brake system remains operational but without ABS regulation.

Antilock brake system ⇨ 152.

Upshift

SHIFT illuminates green as a control indicator, or is shown as a symbol ▲ with the number of a higher gear in the Driver Information Centre, when upshifting is recommended for fuel saving reasons.

On some versions, gearshift indication is popped-up as full page in the Driver Information Centre.

Driver Information Centre ⇨ 93.

Power steering

! illuminates yellow.

Illuminates with power steering reduced

Power steering is reduced due to overheating of the system. Control indicator extinguishes when the system has cooled down.

Stop-start system ⇨ 142.

Illuminates with power steering disabled

Failure in the power steering system. Consult a workshop.

Lane departure warning

illuminates green or flashes yellow.

Illuminates green

System is switched on and ready to operate.

Flashes yellow

System recognises an unintended lane change.

Ultrasonic parking assist

P illuminates yellow.

Fault in system

or

Fault due to sensors that are dirty or covered by ice or snow

or

Interference due to external sources of ultrasound. Once the source of interference is removed, the system will operate normally.

Have the cause of the fault in the system remedied by a workshop.

Ultrasonic parking assist ⇨ 175.

Electronic Stability Control off

illuminates yellow.

The system is deactivated.

Electronic Stability Control and Traction Control system

illuminates or flashes yellow.

Illuminates

A fault in the system is present. Continued driving is possible. Driving stability, however, may deteriorate depending on road surface conditions.

Have the cause of the fault remedied by a workshop.

Flashes

The system is actively engaged. Engine output may be reduced and the vehicle may be braked automatically to a small degree.

Electronic Stability Control (ESC) ⇨ 155, Traction Control system (TC) ⇨ 155.

Traction Control system off

illuminates yellow.

The system is deactivated.

Preheating

illuminates yellow.

Preheating is activated. Only activates when outside temperature is low.

Diesel particle filter

illuminates or flashes yellow.

The diesel particle filter requires cleaning.

Continue driving until extinguishes. If possible, do not allow engine speed to drop below 2000 rpm.

Illuminates

The diesel particle filter is full. Start cleaning process as soon as possible.

Flashes

The maximum filling level of the filter is reached. Start cleaning process immediately to avoid damage to the engine.

Diesel particle filter ⇨ 146, Stop-start system ⇨ 142.

Tyre pressure monitoring system

(!) illuminates or flashes yellow.

Illuminates

Tyre pressure loss. Stop immediately and check tyre pressure.

Flashes

Fault in system or tyre without pressure sensor mounted (e.g. spare wheel). After 60-90 seconds the control indicator illuminates continuously. Consult a workshop.

Engine oil pressure

illuminates red.

Illuminates when the ignition is switched on and extinguishes shortly after the engine starts.

Illuminates when the engine is running

Caution

Engine lubrication may be interrupted. This may result in damage to the engine and/or locking of the drive wheels.

1. Depress clutch.
2. Select neutral gear, set selector lever to **N**.
3. Move out of the flow of traffic as quickly as possible without impeding other vehicles.
4. Switch off ignition.

⚠ Warning

When the engine is off, considerably more force is needed to brake and steer. During an Autostop the brake servo unit will still be operational.

Do not remove key until vehicle is stationary, otherwise the steering wheel lock could engage unexpectedly.

Check oil level before seeking the assistance of a workshop ⇨ 202.

Low fuel

● illuminates or flashes yellow.

Illuminates

Level in fuel tank is too low.

Flashes

Fuel used up. Refuel immediately. Never run the tank dry.

Catalytic converter ⇨ 147.

Bleeding the diesel fuel system ⇨ 207.

Immobiliser

flashes yellow.

Fault in the immobiliser system. The engine cannot be started.

Reduced engine power

illuminates yellow.

The engine power is limited. Consult a workshop.

Exterior light

illuminates green.

The exterior lights are on ⇨ 116.

High beam

illuminates blue.

Illuminates when high beam is on or during headlight flash ⇨ 118, or when high beam is on with high beam assist or intelligent light range ⇨ 120.

High beam assist

illuminates green.

The high beam assist or intelligent light range is activated ⇨ 118, ⇨ 120.

Adaptive forward lighting

illuminates or flashes yellow.

Illuminates

Fault in system.

Seek the assistance of a workshop.

Flashes

System switched to symmetrical low beam.

Control indicator flashes for approx. four seconds after the ignition is switched on as a reminder that the system has been activated ⇨ 119.

Automatic light control ⇨ 117.

Fog light

illuminates green.

The front fog lights are on ⇨ 124.

Rear fog light

illuminates yellow.

The rear fog light is on ⇨ 124.

Low washer fluid

illuminates yellow.

The washer fluid level is low.

Washer fluid ⇨ 204.

Cruise control

illuminates white or green.

Illuminates white

The system is on.

Illuminates green

Cruise control is active.

Cruise control ⇨ 159.

Adaptive cruise control

illuminates white or green.

Illuminates white

The system is on.

Illuminates green

Adaptive cruise control is active.

Adaptive cruise control ⇨ 162.

Vehicle detected ahead

🚗 illuminates green.

A vehicle ahead is detected in the same lane.

Adaptive cruise control ⇨ 162, Forward collision alert ⇨ 169.

Door open

🚪 illuminates red.

A door or the tailgate is open.

Information displays

Driver Information Centre

The Driver Information Centre is located in the instrument cluster between speedometer and tachometer. It is available as Midlevel-Display or Uplevel-Combi-Display.

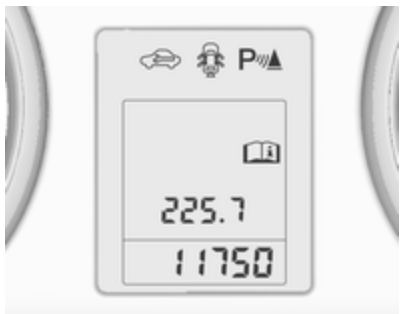

Midlevel-Display indicates:

- overall odometer
- trip odometer
- some control indicators
- vehicle information
- trip/fuel information
- vehicle messages, displayed as code numbers ⇨ 99.

In the Uplevel-Combi-Display, menu pages can be selected by pressing **MENU**. Menu symbols are indicated in the top line of the display:

- **Vehicle Information Menu**
- **Trip/Fuel Information Menu**
- **ECO ECO Information Menu**
- **Performance Menu**

Some of the displayed functions differ when the vehicle is being driven or at a standstill. Some functions are only available when the vehicle is being driven.

Vehicle personalisation ⇨ 105.
Memorised settings ⇨ 24.

Selecting menus and functions

The menus and functions can be selected via the buttons on the turn signal lever.

Press **MENU** to switch between the menus or to return from a submenu to the next higher menu level.

Turn the adjuster wheel to highlight a menu option or to set a numeric value.

Press **SET/CLR** to select a function or confirm a message.

Vehicle Information Menu

Press **MENU** to select the **Vehicle Information Menu** or, on Uplevel-Combi-Display, select 🚗.

Turn the adjuster wheel to select a submenu. Press **SET/CLR** to confirm.

Follow the instructions given in the submenus.

Possible submenus can include, depending on the version:

- **Unit**: Displayed units can be changed.
- **Tyre Pressure**: Checks tyre pressure of all wheels during driving ⇨ 231.
- **Tyre Load**: Select tyre pressure category according to the current actual tyre inflation pressure ⇨ 231.

- **Remaining Oil Life**: Indicates when to change the engine oil and filter ⇨ 83.

- **Speed Warning**: If exceeding the preset speed, a warning chime will be activated.
- **Traffic Sign Assistant**: Displays detected traffic signs for the current route section. ⇨ 183

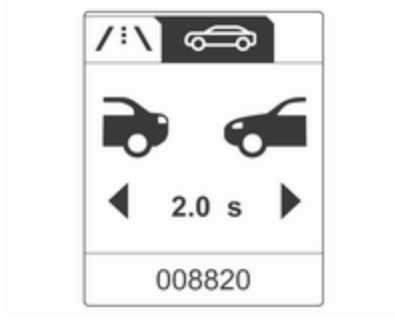

- **Following Dist.**: Displays the distance to a moving vehicle ahead ⇨ 172.

Selection and indication can be different between Midlevel-Display and Uplevel-Combi-Display.

Trip/Fuel Information Menu

Press **MENU** to select the **Trip/Fuel Information Menu**, or select ⁄⁝\ on Uplevel-Combi-Display.

Turn the adjuster wheel to select a submenu. Press **SET/CLR** to confirm.

- trip odometer 1
- trip odometer 2
- digital speed

Trip odometer 2 and digital speed are only available on vehicles with Uplevel-Combi-Display.

Reset trip odometer by pressing **SET/CLR** on the turn signal lever for a few seconds or by pressing the

reset knob between speedometer and Driver Information Centre with the ignition on.

On vehicles with trip computer, more submenus are available.

Selection and indication can be different between Midlevel-Display and Uplevel-Combi-Display.

Trip/Fuel Information Menu, Trip Computer ⇨ 103.

ECO Information Menu

Press **MENU** to select **eco** in the top line of the Uplevel-Combi-Display.

Turn the adjuster wheel to select a submenu. Press **SET/CLR** to confirm.

Submenus are:

- **Shift indication**: Current gear is indicated inside an arrow. The figure above recommends upshifting for fuel saving reasons.

  Eco index display: The current fuel consumption is indicated on a segment display. For economical driving, adapt your driving characteristic to keep the filled segments within the Eco area. The more segments are filled, the higher the fuel consumption. Simultaneously the current consumption value is indicated.

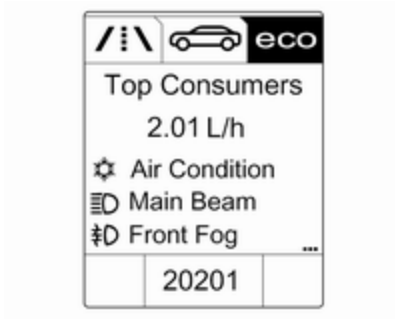

- **Top Consumers**: List of top comfort consumers currently switched on is displayed in descending order. Fuel saving potential is indicated. A switched off consumer disappears from the list and the consumption value will be updated.

  During sporadic driving conditions, the engine will activate the heated rear window automatically to increase the engine load. In this event, the heated rear window is indicated as one of the top consumers, without activation by the driver.

- **Economy Trend**: Displays the average consumption development over a distance of 50 km. Filled segments display the consumption in 5 km steps and shows the effect of topography or driving behaviour on fuel consumption.

Performance Menu

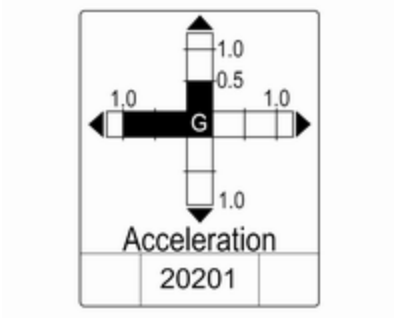

Press **MENU** to select the **Performance Menu**, or select on Uplevel-Combi-Display.

Turn the adjuster wheel to select a submenu. Press **SET/CLR** to confirm.

Submenus are:

- **Acceleration**: Display of current acceleration in all directions.
- **Lap Timer**: Display of lap times, top speed, average speed and average time. Follow the instructions given in the submenu.
- **Coolant Temp.**: Display of coolant temperature.
- **Battery Volt.**: Display of vehicle battery voltage.

Graphic-Info-Display, Colour-Info-Display

Depending on the vehicle configuration the vehicle has a Graphic-Info-Display or Colour-Info-Display. The Info-Display is located in the instrument panel above the Infotainment system.

Graphic-Info-Display

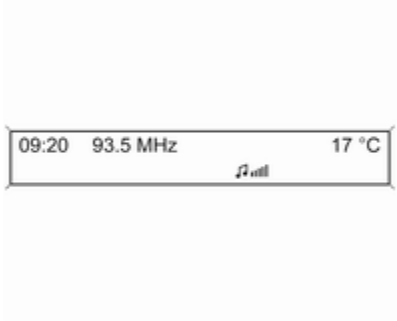

Depending on the Infotainment system, the Graphic-Info-Display is available in two versions.

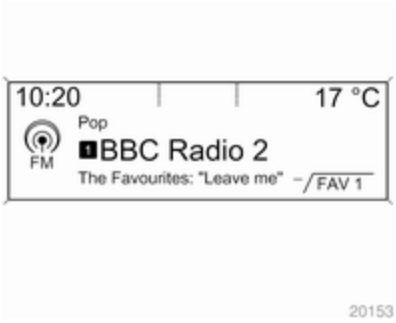

Graphic-Info-Display indicates:

- time ⇨ 77
- outside temperature ⇨ 76
- date ⇨ 77
- Infotainment system, see description in the Infotainment manual
- settings for vehicle personalisation ⇨ 105

Colour-Info-Display

The Colour-Info-Display indicates in colour:

- time ⇨ 77
- outside temperature ⇨ 76
- date ⇨ 77
- Infotainment system, see description in the Infotainment manual
- navigation, see description in the Infotainment manual
- system settings
- vehicle messages ⇨ 99
- settings for vehicle personalisation ⇨ 105

The type of information and how it is displayed depends on the equipment of the vehicle and the settings made.

Selecting menus and settings

Menus and settings are accessed via the display.

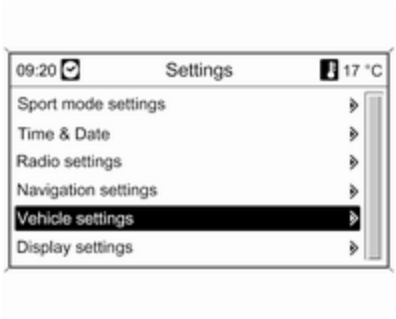

Selections are made via:

- menus
- function buttons and multifunction knob of the Infotainment system

Selecting with the Infotainment system

Select a function via the Infotainment system buttons. The menu of the selected function is displayed.

The multifunction knob is used to select an item and to confirm.

Multifunction knob

The multifunction knob is the central control element for the menus:

Turn

- to highlight a menu option
- to set a numeric value or to display a menu option

Press (the outer ring)

- to select or activate the highlighted option
- to confirm a set value
- to switch a system function on/off

BACK

Press **BACK** to:

- exit a menu without changing settings
- return from a submenu to a higher menu level
- delete the last character in a character sequence

Press and hold the **BACK** for a few seconds to delete the entire entry.

Vehicle personalisation ⇨ 105.

Memorised settings ⇨ 24.

Smartphone controller

The smartphone controller allows a smartphone to access vehicle data via WLAN or Bluetooth connection. This data can then be displayed and analysed on the smartphone.

Vehicle messages

Messages are indicated mainly in the Driver Information Centre, in some cases together with a warning and signal buzzer.

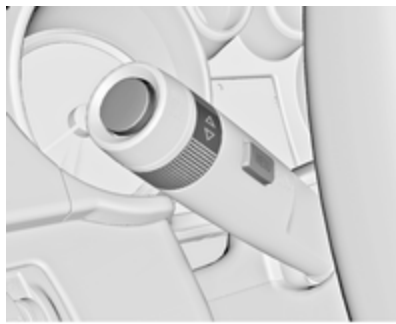

Press **SET/CLR**, **MENU** or turn the adjuster wheel to confirm a message.

Vehicle messages on the Midlevel-Display

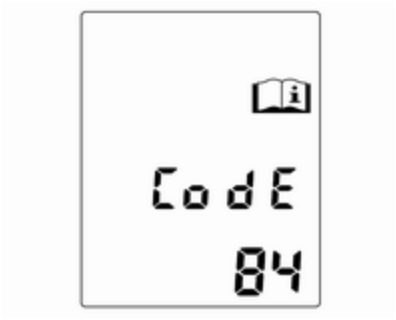

The vehicle messages are displayed as code numbers.

No.	Vehicle message
2	No radio remote control detected, depress clutch pedal to restart
4	Air conditioning off
5	Steering wheel is locked
6	Depress brake pedal to release electric parking brake
7	Turn steering wheel, switch ignition off then on
9	Turn steering wheel, restart engine
12	Vehicle overloaded
13	Compressor overheated
15	Centre high-mounted brake light failure
16	Brake light failure
17	Headlight levelling malfunction
18	Left low beam failure
19	Rear fog light failure
20	Right low beam failure
21	Left sidelight failure
22	Right sidelight failure
23	Reversing light failure
24	Number plate light failure
25	Left front turn signal failure
26	Left rear turn signal failure
27	Right front turn signal failure
28	Right rear turn signal failure
29	Check trailer brake light
30	Check trailer reversing light
31	Check left trailer turn signal
32	Check right trailer turn signal
33	Check trailer rear fog light
34	Check trailer rear light
35	Replace battery in radio remote control
48	Clean side blind spot alert system
49	Lane departure warning unavailable
53	Tighten fuel filler cap
54	Water in diesel fuel filter
55	Diesel particle filter is full ⇨ 146

No.	Vehicle message
56	Tyre pressure imbalance on front axle
57	Tyre pressure imbalance on rear axle
58	Tyres without TPMS sensors detected
59	Open then close driver window
60	Open then close front passenger window
61	Open then close rear left window
62	Open then close rear right window
65	Theft attempted
66	Service anti-theft alarm system
67	Service steering wheel lock
68	Service power steering
69	Service suspension system
70	Service level control system

No.	Vehicle message
71	Service rear axle
74	Service AFL
75	Service air conditioning
76	Service side blind spot alert system
77	Service lane departure warning
79	Top up engine oil
81	Service transmission
82	Change engine oil soon
83	Service adaptive cruise control
84	Engine power is reduced
89	Service vehicle soon
94	Shift to park position before exiting
95	Service airbag
128	Bonnet open
134	Park assist fault, clean bumper
136	Service parking assist

No.	Vehicle message
145	Check washer fluid level
174	Low vehicle battery
258	Parking assist off

Vehicle messages on the Uplevel-Combi-Display

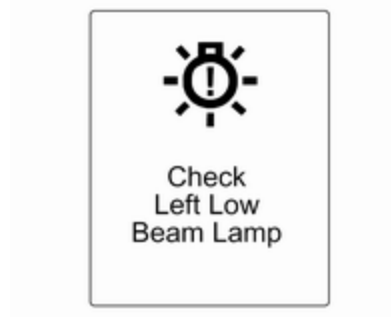

The vehicle messages are displayed as text. Follow the instructions given in the messages.

Vehicle messages on the Colour-Info-Display

Some important messages appear additionally in the Colour-Info-Display. Press the multifunction knob to confirm a message. Some messages only pop-up for a few seconds.

Warning chimes

When starting the engine or whilst driving

Only one warning chime will sound at a time.

The warning chime regarding unfastened seat belts has priority over any other warning chime.

- If seat belt is not fastened.
- If a door or the tailgate is not fully closed when starting off.
- If a certain speed is exceeded with parking brake applied.
- If a programmed speed is exceeded.
- If a warning message or a warning code appears in the Driver Information Centre.
- If the parking assist detects an object.
- If an unintended lane change occurs.
- If the diesel particle filter has reached the maximum filling level.

When the vehicle is parked and/or the driver's door is opened

- With exterior lights on.

During an Autostop

- If the driver's door is opened.

Battery voltage

When the vehicle battery voltage is running low, a warning message or warning code 174 will appear in the Driver Information Centre.

1. Switch off immediately any electric consumers which are not required for a safe ride, e.g. seat heating, heated rear window or other main consumers.
2. Charge the vehicle battery by driving continuously for a while or by using a charging device.

The warning message or warning code will disappear after the engine has been started twice consecutively without a voltage drop.

If the vehicle battery cannot be recharged, have the cause of the fault remedied by a workshop.

Trip computer

The menus and functions can be selected via the buttons on the turn signal lever ⇨ 93.

Press **MENU** to select the **Trip/Fuel Information Menu**, or select /⋮\ on the Uplevel-Combi-Display.

Trip/Fuel Information Menu on Uplevel-Combi-Display
Turn the adjuster wheel to select the submenus:

- trip odometer 1
- average consumption 1
- average speed 1

- trip odometer 2
- average consumption 2
- average speed 2

- digital speed
- range
- instantaneous consumption
- route guidance

Trip computer 1 and 2

The information of two trip computers can be reset separately for odometer, average consumption and average speed by pressing **SET/CLR**, making it possible to display different trip information for different drivers.

Trip odometer

Trip odometer displays the recorded distance since a certain reset.

Trip odometer counts up to a distance of 2000 km and then restarts at 0.

To reset, press **SET/CLR** for a few seconds.

Range

Range is calculated from current fuel tank content and current consumption. The display shows average values.

After refuelling, the range is updated automatically after a brief delay.

When the fuel level in the tank is low, a message appears on vehicles with Uplevel-Combi-Display.

When the tank needs to be refuelled immediately, a warning code or warning message is displayed on vehicles with Midlevel-Display or Uplevel-Combi-Display.

Additionally, control indicator ⬬ illuminates or flashes in the fuel gauge⇨ 91.

Average consumption

Display of average consumption. The measurement can be reset at any time and starts with a default value.

To reset, press **SET/CLR** for a few seconds.

Instantaneous consumption

Display of the instantaneous consumption.

Average speed

Display of average speed. The measurement can be reset at any time.

To reset, press **SET/CLR** for a few seconds.

Digital speed

Digital display of the instantaneous speed.

Traffic sign assistant

Indicates detected traffic signs for the current route section ⇨ 183.

Route guidance

In addition to the navigation information in the Colour-Info-Display, route guidance is displayed in the Driver Information Centre.

Vehicle personalisation

The vehicle's behaviour can be personalised by changing the settings in the Info-Display.

Some of the personal settings for different drivers can be memorised individually for each vehicle key. Memorised settings ⇨ 24.

Depending on vehicle equipment and country-specific regulations some of the functions described below may not be available.

Some functions are only displayed or active when the engine is running.

Personal settings in the Graphic-Info-Display

CD 400plus/CD 400/CD 300

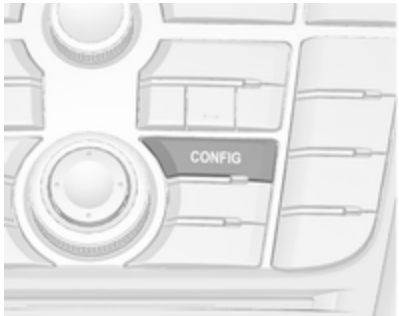

Press **CONFIG**. The menu **Settings** is displayed.

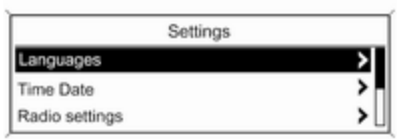

The following settings can be selected by turning and pressing the multifunction knob:

- **Sport mode settings**
- **Languages**
- **Time Date**
- **Radio settings**
- **Phone settings**
- **Vehicle settings**

In the corresponding submenus the following settings can be changed:

Sport mode settings
The driver can select the functions which will be activated in Sport mode ⇨ 157.

- **Sport suspension**: Damping becomes harder.
- **Sport powertrain performance**: Accelerator pedal and gear change characteristics become more responsive.
- **Sport steering**: Steering support is reduced.
- **Swap backlight colour main instr.**: Changes the instrument illumination colour.

Languages
Selection of the desired language.

Time Date
See Clock ⇨ 77.

Radio settings
See description in the Infotainment manual for further information.

Phone settings
See description in the Infotainment manual for further information.

Vehicle settings

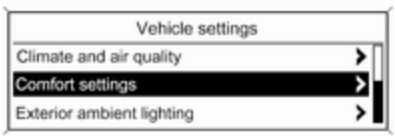

- **Climate and air quality**

  Auto fan speed: Modifies the level of the cabin airflow of the climate control in automatic mode.

  Climate control mode: Controls the state of the cooling compressor when the vehicle is started. Last setting (recommended) or at vehicle start is either always ON or always OFF.

  Auto rear demist: Activates heated rear window automatically.

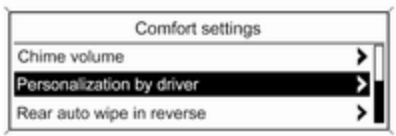

20340

- **Comfort settings**

  Chime volume: Changes the volume of warning chimes.

  Personalization by driver: Activates or deactivates the personalisation function.

  Rear auto wipe in reverse: Activates or deactivates automatic switching on of the rear window wiper when reverse gear is engaged.

- **Park assist / Collision detection**

  Park assist: Activates or deactivates the ultrasonic parking assist. Activation is selectable with or without attached trailer coupling.

  Auto collision preparation: Activates or deactivates the automatic brake functionality of the vehicle in the event of imminent collision danger. The following is selectable: the system will take over brake control, warn by chimes only or is deactivated.

  Side blind zone alert: Changes the settings for the side blind spot alert system.

- **Exterior ambient lighting**

  Duration upon exit of vehicle: Activates or deactivates and changes the duration of exit lighting.

  Exterior lighting by unlocking: Activates or deactivates the welcome lighting.

- **Power door locks**

  Auto door lock: Activates or deactivates the automatic door unlocking function after switching off ignition. Activates or deactivates the automatic door locking function after driving-off.

  Stop door lock if door open: Activates or deactivates the automatic door locking function while a door is open.

  Delayed door lock: Activates or deactivates the delayed door locking function.

- **Remote locking, unlocking, starting**

  Remote unlock feedback: Activates or deactivates the hazard warning flasher feedback whilst unlocking.

  Remote door unlock: Changes the configuration to unlock only the driver's door or the whole vehicle whilst unlocking.

  Auto relock doors: Activates or deactivates the automatic relock function after unlocking without opening the vehicle.

- **Restore factory settings**

  Restore factory settings: Resets all settings to the default settings.

Settings in the Colour-Info-Display

Navi 950/Navi 650/CD 600

Press **CONFIG** on the Infotainment system faceplate to enter the Configuration menu.

Turn the multifunction knob to scroll upwards or downwards in the list. Press the multifunction knob (Navi 950 / Navi 650: press the outer ring) to select a menu item.

- Sport Mode Profile
- Languages
- Time and Date
- Radio Settings
- Phone Settings
- Navigation Settings
- Display Settings
- Vehicle Settings

In the corresponding submenus the following settings can be changed:

Sport Mode Profile

- **Engine Sport Performance**:

  Accelerator pedal and gear change characteristics become more responsive.
- **Sport Mode Back Lighting**:

  Changes the instrument illumination colour.
- **Sport Suspension**: Damping becomes harder.
- **Sport Steering**: Steering support is reduced.

Languages

Selection of the desired language.

Time and Date

See Infotainment manual for further information.

Radio Settings

See Infotainment manual for further information.

Phone Settings

See Infotainment manual for further information.

Navigation Settings

See Infotainment manual for further information.

Display Settings

- **Home Page Menu**:

  See Infotainment manual for further information.
- **Display Off**:

  See Infotainment manual for further information.
- **Map Settings**:

  See Infotainment manual for further information.

Vehicle Settings

- **Climate and Air Quality**

  Auto Fan Speed: Modifies the fan regulation. Changed setting will be active after switching the ignition off and on again.

  Air Conditioning Mode: Activates or deactivates cooling when switching on the ignition or uses the last chosen setting.

  Auto Demist: Activates or deactivates auto demist.

Auto Rear Demist: Activates the heated rear window automatically.

- **Comfort and Convenience**

  Chime Volume: Changes the volume of warning chimes.

  Personalisation by Driver: Activates or deactivates the personalisation function.

  Auto Reverse Gear Wiper: Activates or deactivates automatic switching on of the rear window wiper when reverse gear is engaged.

- **Collision Detection Systems**

  Park Assist: Activates or deactivates the ultrasonic sensors. Activation is selectable with or without attached trailer coupling.

  Automatic Collision Preparation: Activates or deactivates the automatic brake functionality of the vehicle in the event of imminent collision danger. The following is selectable: the system will take over brake control, warn by chimes only or is deactivated completely.

  Side Blind Zone Alert: Activates or deactivates the side blind spot alert system.

- **Lighting**

  Vehicle Locator Lights: Activates or deactivates the entry lighting.

  Exit Lighting: Activates or deactivates and changes the duration of exit lighting.

- **Power Door Locks**

  Open Door Anti Lock Out: Activates or deactivates the automatic door locking function while a door is open.

  Auto Door Lock: Activates or deactivates the automatic door unlocking function after switching off ignition. Activates or deactivates the automatic door locking function after driving-off.

  Delay Door Lock: Activates or deactivates the delayed door locking function.

- **Remote Lock/Unlock/Start**

  Remote Lock Feedback: Activates or deactivates the hazard warning flasher feedback whilst locking.

  Remote Unlock Feedback: Activates or deactivates the hazard warning flasher feedback whilst unlocking.

  Remote Door Unlock: Changes the configuration to unlock only the driver's door or the whole vehicle whilst unlocking.

  Relock Remotely Unlocked Doors: Activates or deactivates the automatic relock function after unlocking without opening the vehicle.

- **Return to Factory Settings?**: Resets all settings to the default settings.

Telematics service

OnStar

OnStar is a personal connectivity and service assistant with integrated Wi-Fi hotspot. The OnStar service is available 24 hours a day, seven days a week.

Note
OnStar is not available for all markets. For further information, contact your workshop.

Note
In order to be available and operational, OnStar needs a valid OnStar subscription, functioning vehicle electrics, mobile service and GPS satellite link.

To activate the OnStar services and set up an account, press ⓞⓝ and speak with an advisor.

Depending on the equipment of the vehicle, the following services are available:

- Emergency services and support in the case of a vehicle breakdown
- Wi-Fi hotspot
- Smartphone application
- Remote control, e.g. location of the vehicle, activation of horn and lights, control of central locking system
- Stolen vehicle assistance
- Vehicle diagnostics
- Destination download

Note
The OnStar module of the vehicle is deactivated after ten days without an ignition cycle. Functions requiring a data connection will be available again after switching on the ignition.

OnStar buttons

Note
Depending on the equipment, the OnStar buttons can also be integrated in the rear view mirror.

Privacy button
Press and hold ⊗ until a message is heard to activate or deactivate the transmission of the vehicle location.

Press ⊗ to answer a call or to end a call to an advisor.

Press ⊗ to access the Wi-Fi settings.

Service button
Press ⓞⓝ to establish a connection to an advisor.

SOS button

Press SOS to establish a priority emergency connection to a specially trained emergency advisor.

Status LED

Green: The system is ready with activated transmission of the vehicle location.

Green flashing: The system is on a call.

Red: A problem arose.

Off: The system is ready with deactivated transmission of the vehicle location or the system is in standby mode.

Red / green flashing for a short period of time: The transmission of the vehicle location has been deactivated.

OnStar services

General services

If you need any information e.g. opening hours, points of interest and destinations or if you need any support e.g. in the case of a vehicle breakdown, a flat tyre and empty fuel tank, press OnStar to establish a connection to an advisor.

Emergency services

In the case of an emergency situation, press SOS and talk to an advisor. The advisor then contacts emergency or assistance service providers and directs them to your vehicle.

In the case of an accident with activation of airbags or belt tensioners, an automatic emergency call is established. The advisor is immediately connected to your vehicle to see whether help is needed.

Wi-Fi hotspot

The Wi-Fi hotspot of the vehicle provides internet connectivity with a maximum speed of 4G/LTE.

Note
The Wi-Fi hotspot functionality is not available for all markets.

Up to seven devices may be connected.

To connect a mobile device with the Wi-Fi hotspot:

1. Press and then select Wi-Fi settings on the Info-Display. The settings displayed include the Wi-Fi hotspot name (SSID), password and connection type.
2. Start a Wi-Fi network search on your mobile device.
3. Select your vehicle hotspot (SSID) when listed.
4. When prompted, enter the password on your mobile device.

Note
To change the SSID or password, press OnStar and talk to an advisor or log in to your account.

To switch off the Wi-Fi hotspot functionality, press OnStar to call an advisor.

Smartphone app

With the myOpel smartphone app, some vehicle functions can be operated remotely.

The following functions are available:

- Lock or unlock vehicle.
- Honk horn or flash lights.
- Check fuel level, engine oil life and tyre pressure (only with tyre pressure monitoring system).
- Send navigation destination to the vehicle, if equipped with a built-in navigation system.
- Locate vehicle on a map.
- Manage Wi-Fi settings.

To operate these functions, download the app from App Store® or Google Play™ Store.

Remote control

If desired, use any phone to call an advisor, who can remotely operate specific vehicle functions. Find the respective OnStar phone number on our country-specific website.

The following functions are available:

- Lock or unlock vehicle.
- Provide information on the vehicle location.
- Honk horn or flash lights.

Stolen vehicle assistance

If the vehicle is stolen, report the theft to the authorities and request OnStar stolen vehicle assistance. Use any phone to call an advisor. Find the respective OnStar phone number on our country-specific website.

OnStar can provide support in locating and recovering the vehicle.

Theft alert

When the anti-theft alarm system is triggered, a notification is sent to OnStar. You are then informed about this event by text message or email.

Restart prevention

By sending remote signals, OnStar can prevent the vehicle from restarting once it has been turned off.

On-demand diagnostics

At any time e.g. if the vehicle displays a vehicle message, press ⓞⓝ to contact an advisor and ask to complete a real-time diagnostic check to directly determine the issue. Depending on the results, the advisor will provide further support.

Diagnostic report

The vehicle automatically transmits diagnostic data to OnStar which sends a monthly email report to you and your preferred workshop.

Note
The workshop notification function can be disabled in your account.

The report contains the status of key operating systems of the vehicle like engine, transmission, airbags, ABS, and other major systems. It also provides information on possible maintenance items and tyre pressure (only with tyre pressure monitoring system).

To look at the information in greater detail, select the link within the email and log in to your account.

Destination download

A desired destination can be directly downloaded to the navigation system.

Press ⓞⓝ to call an advisor and describe the destination or point of interest.

The advisor can look up any address or point of interest and directly send the destination to the built-in navigation system.

OnStar settings

OnStar PIN

To have full access to all OnStar services, a four-digit PIN is required. The PIN has to be personalised when first talking to an advisor.

To change the PIN, press ⓞ to call an advisor.

Account data

An OnStar subscriber has an account where all the data is stored. To request a change of the account information, press ⓞ and talk to an advisor or log in to your account.

If the OnStar service is used on another vehicle, press ⓞ and request that the account be transferred to the new vehicle.

Note
In any case, if the vehicle is disposed of, sold or otherwise transferred, immediately inform OnStar about the changes and terminate the OnStar service on this vehicle.

Vehicle location

The vehicle location is transmitted to OnStar when service is requested or triggered. A message on the Info-Display informs about this transmission.

To activate or deactivate the transmission of the vehicle location, press and hold ⓞ until an audio message is heard.

The deactivation is indicated by the status light flashing red and green for a short period of time and each time the vehicle is started.

Note
If the transmission of the vehicle location is deactivated, some services are no longer available.

Note
The vehicle location always remains accessible to OnStar in the case of an emergency.

Find the privacy policy in your account.

Software updates

OnStar may remotely carry out software updates without further notice or consent. These updates are to enhance or maintain safety and security or the operation of the vehicle.

These updates may concern privacy issues. Find the privacy policy in your account.

ERA GLONASS

ERA GLONASS is a manually or automatically actuated emergency service. Emergency centres provide assistance and information during an emergency.

In case of an accident with activation of airbags or belt tensioners, an emergency call is placed automatically. An immediate connection with an advisor will be established who will check whether help is needed.

⚠ Danger

The service is only available for markets where it is legally required and activated. Furthermore, the manual and the automatic emergency call function depend on the availability of the emergency centres and the infrastructure in the country.

Note
In order to be available and operational, the system requires functioning vehicle electrics, mobile service and GLONASS satellite link. Depending on equipment, a backup battery is used.

Control buttons

SOS button

Press SOS and after a prompt press again to establish an emergency connection.

TECT button

Press TECT for cancellation of a call or for service (technician use only).

Status LED

The system provides feedback via voice messages and an LED.

Green	:	The system is ready or within the recall time, during which the advisor can call back after an established connection (up to approx. two hours, also possible with ignition off).
Green flashing	:	The system is dialling, data transmitting or a voice connection is established.
Red	:	The system is booting up for maximum 15 seconds after switching on ignition, then the LED turns green. If the LED stays red or turns from green to red, a problem arose seek the assistance of a workshop.
Red flashing	:	Call is not possible, e.g. because of unavailable mobile network.
Red/ green flashing	:	System is in test mode. Do not press any button and wait until time-out.
Off	:	System is off.

Note
In very cold conditions it may take a while to warm up the backup battery. When operational, the red LED turns green.

Seek the assistance of a workshop if the LED does not illuminate after switching on the ignition.

Lighting

Exterior lighting **116**
Light switch 116
Automatic light control 117
High beam 118
High beam assist 118
Headlight flash 118
Headlight range adjustment 119
Headlights when driving abroad 119
Daytime running lights 120
Adaptive forward lighting 120
Hazard warning flashers 123
Turn and lane-change signals . 123
Front fog lights 124
Rear fog lights 124
Parking lights 124
Reversing lights 125
Misted light covers 125
Interior lighting **125**
Instrument panel illumination control 125
Interior lights 125
Reading lights 126
Sunvisor lights 126
Lighting features **127**
Centre console lighting 127
Entry lighting 127
Exit lighting 127
Battery discharge protection 128

Exterior lighting

Light switch

Turn light switch:

0 : lights off
⇛ : sidelights
≣D : low beam

Control indicator ⇛ ⇨ 92.

Light switch with automatic light control

Turn light switch:

AUTO : automatic light control: low beam is switched on and off automatically depending on external lighting conditions

⏻ : activation or deactivation of the automatic light control. Switch turns back to **AUTO**

≡D : sidelights

≡D : low beam

In the Driver Information Centre with Uplevel-Combi-Display, the current status of the automatic light control is displayed.

When switching on the ignition, automatic light control is active.

When low beam is on, ≡D illuminates. Control indicator ≡D ⇨ 92.

Tail lights

Tail lights are illuminated together with low/high beam and sidelights.

Automatic light control

When the automatic light control function is switched on and the engine is running, the system switches between daytime running light and headlights automatically depending on the lighting conditions and information given by the rain sensor system.

When the automatic light control function is switched on and the engine is running, the system switches between daytime running lights and headlights automatically depending on the external lighting conditions.

Daytime running light ⇨ 120.

Automatic headlight activation

During poor lighting conditions the headlights are switched on.

Furthermore the headlights are switched on if the windscreen wipers have been activated for several wipes.

Tunnel detection

When a tunnel is entered the headlights are switched on immediately.

Adaptive forward lighting ⇨ 120.

High beam

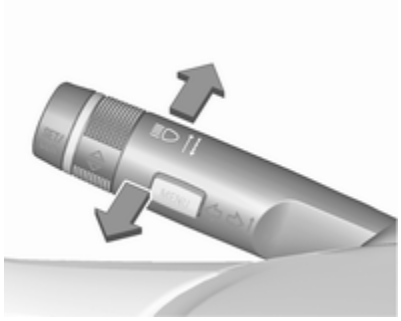

To switch from low to high beam, push lever.

To switch to low beam, push lever again or pull.

High beam assist

Description for version with halogen headlights. High beam assist with adaptive forward lighting ⇨ 120.

This feature allows high beam to function as the main driving light at night and when vehicle speed is faster than 40 km/h.

It switches to low beam when:

- A sensor detects the lights of oncoming or preceding vehicles.
- The vehicle speed is slower than 20 km/h.
- It is foggy or snowy.
- Driving in urban areas.

If there are no restrictions detected, the system switches back to high beam.

Activation

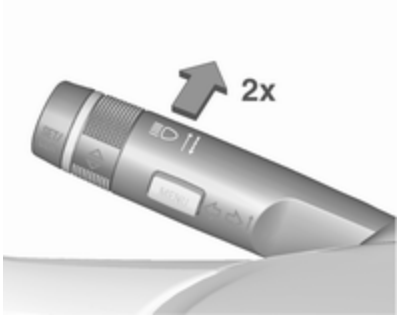

The high beam assist is activated by pushing the indicator lever twice with a speed above 40 km/h.

The green control indicator illuminates continuously when the assist is activated, the blue one illuminates when high beam is on.

Control indicator ⇨ 92.

Deactivation

Push indicator lever once. It is also deactivated when front fog lights are switched on.

If a headlight flash is activated when the high beam is on, the high beam assist will be deactivated.

If a headlight flash is activated when the high beam is off, the high beam assist will stay activated.

The latest setting of the high beam assist will remain after the ignition is switched on again.

Headlight flash

To activate the headlight flash, pull lever.

Headlight range adjustment

Manual headlight range adjustment

To adapt headlight range to the vehicle load to prevent dazzling: turn thumb wheel to required position.

0 : front seats occupied
1 : all seats occupied
2 : all seats occupied and load compartment laden
3 : driver's seat occupied and load compartment laden

Dynamic automatic headlight levelling ⇨ 120.

Headlights when driving abroad

The asymmetrical headlight beam extends visibility at the edge of the road at the passenger side.

However, when driving in countries where traffic drives on the opposite side of the road, adjust the headlights to prevent dazzling of oncoming traffic.

Vehicles with halogen headlight system

The headlights do not have to be adjusted.

Vehicles with Xenon headlight system

1. Key in ignition switch.
2. Pull turn signal lever and hold (headlight flash).
3. Switch on ignition.
4. After approx. five seconds the control indicator starts flashing and an acoustic signal sounds.

Control indicator ⇨ 92.

Every time the ignition is switched on, flashes as a reminder for approx. four seconds.

For deactivation, operate the same procedure as described above. ⚠ will not flash when function is deactivated.

Daytime running lights

Daytime running lights increase visibility of the vehicle during daylight.

They are switched on automatically when ignition is on.

If the vehicle is equipped with automatic light control function, the system switches between daytime running light and low/high beam automatically depending on the lighting conditions and information given by the rain sensor system. Automatic light control ⇨ 117.

Adaptive forward lighting

The Adaptive forward lighting functions are only available with Bi-Xenon headlights. Light range, light distribution and intensity of light are variably triggered depending on the light conditions, weather and road type.

With the light switch in position **AUTO** all lighting functions are available.

The following functions are available also with light switch in position ≣D:

- dynamic curve lighting
- cornering light
- reversing function
- dynamic automatic headlight levelling

Playstreet lighting

Activated automatically at low speed up to approx. 30 km/h. The light beam is turned at an angle of 8° to the roadside.

Town lighting

Activated automatically at a speed range between approx. 40 and 55 km/h and when street lights are detected by the light sensor. The light range is reduced by an extended light distribution.

Country lighting

Activated automatically at a speed range between approx. 55 and 115 km/h. The beam of light and the brightness is different between the left and the right side.

Motorway lighting

Activated automatically at a speed above approx. 115 km/h and minimal steering movements. It switches on after a delay or directly when the vehicle is powerfully accelerated. The light beam is longer and brighter.

Adverse weather lighting

Activated automatically up to a speed of approx. 70 km/h, when the rain sensor recognizes condensation or the wiper operates continuously. The range, distribution and light intensity is regulated variably depending on visibility.

Dynamic curve lighting

The light beam pivots based on steering wheel angle and speed, improving lighting in curves.

Control indicator ⇨ 92.

Corner lighting

On tight bends or when turning off, depending on the steering angle or the turn signal light, an additional left or right reflector is switched on which illuminates the road at a right angle to the direction of travel. It is activated up to a speed of 40 km/h.

Control indicator ⇨ 92.

Reversing function

If the headlights are on and reverse gear is engaged, both corner lights are switched on. They remain illuminated for 20 seconds after disengaging reverse gear or until driving faster than 17 km/h in a forward gear.

High Beam Assist

This feature allows high beam as main driving light by night and when vehicle speed is faster than 40 km/h.

It switches to low beam when:

- The camera in the windscreen detects the lights of oncoming or preceding vehicles.
- The vehicle speed is slower than 20 km/h.
- It is foggy or snowy.
- Driving in urban areas.

If there are no restrictions detected, the system switches back to high beam.

Activation

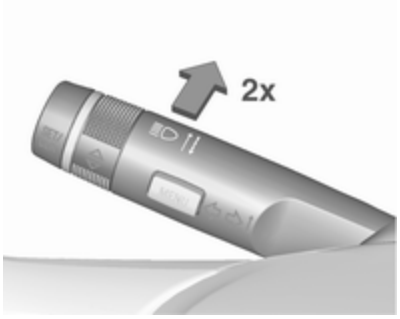

The high beam assist is activated by pushing the indicator lever twice with a speed above 40 km/h.

The green control indicator illuminates continuously when the assist is activated, the blue one illuminates when high beam is on.

Control indicator ⇨ 92.

Deactivation

Push indicator lever once. It is also deactivated when front fog lights are switched on.

If a headlight flash is activated when the high beam is on, the high beam assist will be deactivated.

If a headlight flash is activated when the high beam is off, the high beam assist will stay activated.

High beam assist is always active after the ignition is switched on.

Intelligent light ranging with automatic high beam activation

Intelligent light ranging uses the properties of Bi-Xenon headlights to extend the light range of the low beam by up to 400 metres and additionally activates automatic high beam without dazzling or disturbing oncoming or preceding traffic.

High beam is deactivated and the low beam light range is reduced to avoid dazzling when the following restrictions are detected by the front camera in the windscreen:

- A preceding vehicle is recognised.
- An oncoming vehicle is recognised.
- Urban areas are entered.
- It is foggy or snowy.

If there are no restrictions detected, the system switches back to high beam.

When the system is active, the front camera monitors the area ahead of the vehicle and ensures an optimum light distribution for maximum driver vision during almost all conditions.

Intelligent light ranging with automatic high beam activation therefore reduces the difference between conventional low and high beam without drastic changes in light-range, distribution and intensity.

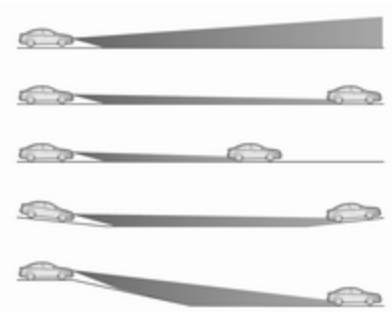

A special topographical evaluation function detects preceding vehicles on hills or slopes by recognising the rear light moving ahead. The system adjusts the height of the light range to ensure optimum illumination on the road ahead without dazzling.

Activation

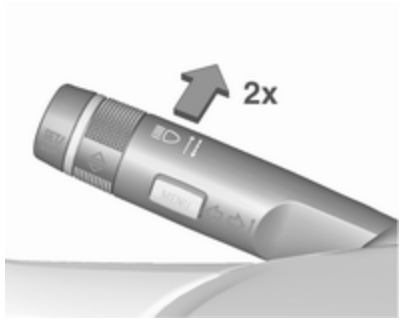

Intelligent light ranging and automatic high beam activation are switched on together by pushing the indicator lever twice. They can be switched on with ignition on.

Automatic high beam activation operates at a speed above 40 km/h and deactivates below 20 km/h. Intelligent light ranging operates above 55 km/h.

The green control indicator illuminates continuously when the function is activated, the blue one illuminates when high beam switches on automatically.

Deactivation

Push indicator lever once. It is also deactivated when front fog lights are switched on.

Dynamic automatic headlight levelling

To prevent oncoming traffic from dazzle, headlight levelling is automatically adjusted based on inclination information measured by front and rear axle, acceleration or deceleration and vehicle speed.

Fault in adaptive forward lighting system

When the system detects a failure in the Adaptive forward lighting system, the system moves to a preset position to avoid dazzling of oncoming traffic. If this is not possible the affected headlight will be automatically switched off. In any case one headlight will stay on. A warning is displayed in the Driver Information Centre.

Hazard warning flashers

Operated by pressing .

In the event of an accident with airbag deployment the hazard warning flashers are activated automatically.

Turn and lane-change signals

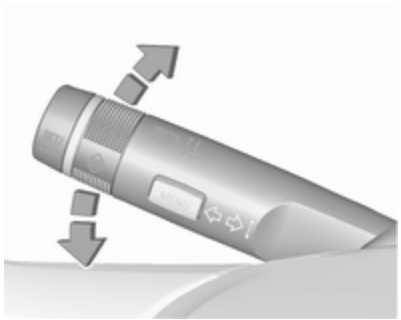

lever up : right turn signal
lever down : left turn signal

A resistance point can be felt when moving the lever.

Constant flashing is activated when the lever is being moved beyond the resistance point. It is deactivated when the steering wheel is moved in

the opposite direction or lever is manually moved back to its neutral position.

Activate temporary flashing by holding the lever just before the resistance point. Turning lights will flash until lever is being released.

To activate three flashes, tap the lever briefly without passing the resistance point.

When a trailer is connected, turn signal flashes six times when pressing the lever until resistance is felt and then releasing.

Front fog lights

Operated by pressing ⚡D.

Light switch in position **AUTO**: switching on front fog lights will switch headlights on automatically.

Rear fog lights

Operated by pressing ⚡.

Light switch in position **AUTO**: switching on rear fog light will switch headlights on automatically.

Light switch in position ⊃⊂: rear fog light can only be switched on with front fog lights.

The vehicle rear fog light is deactivated when towing.

Parking lights

When the vehicle is parked, the parking lights on one side can be activated:

1. Switch off ignition.
2. Move turn signal lever all the way up (right parking lights) or down (left parking lights).

Confirmed by a signal and the corresponding turn signal control indicator.

Reversing lights

The reversing light comes on when the ignition is on and reverse gear is selected.

Misted light covers

The inside of the light housing may mist up briefly in poor, wet and cold weather conditions, in heavy rain or after washing. The mist disappears quickly by itself; to help switch on the headlights.

Interior lighting

Instrument panel illumination control

Brightness of the following lights can be adjusted when the exterior lights are on:

- instrument panel illumination
- Info-Display
- illuminated switches and operation elements

Turn thumb wheel ⚙ and hold until the desired brightness is obtained.

On vehicles with light sensor, the brightness can only be adjusted when the exterior lights are on and the light sensor detects night conditions.

Interior lights

During entry and exit of the vehicle, the front and rear courtesy lights automatically switch on and then off after a delay.

Note
In the event of an accident with airbag deployment the courtesy lights are turned on automatically.

Front courtesy light

Operate rocker switch:

	:	automatic switching on and off
press	:	on
press	:	off

Courtesy light on version with panorama roof

Left and right lamps are separately switchable.

Operate rocker switches:

centre position	:	automatic switching on and off
press I	:	on
press 0	:	off

Rear courtesy lights

Illuminates in conjunction with the front courtesy light depending on rocker switch position.

Press or to switch on manually.

Reading lights

Operated by pressing and in front and rear courtesy lights.

Sunvisor lights

Illuminates when the cover is opened.

Lighting features

Centre console lighting

Spotlight incorporated in the interior lighting comes on when headlights are switched on.

Entry lighting

Welcome lighting

The following lights are switched on for a short time by unlocking the vehicle with the radio remote control:

- headlights
- tail lights
- number plate lights
- instrument panel light
- interior lights
- door and console lights
- puddle lights

Some functions work only in the dark and facilitates locating the vehicle.

The lighting switches off immediately when the ignition key is turned to position **1** ⇨ 141.

Activation or deactivation of this function can be changed in the Settings menu in the Info-Display. Vehicle personalisation ⇨ 105.

The settings can be saved for the key being used ⇨ 24.

The following lights will additionally switch on when the driver's door is opened:

- illumination of some switches
- Driver Information Centre
- door pocket lights
- console lights

Exit lighting

The following lights switch on if the key is removed from the ignition switch:

- interior lights
- instrument panel light (only when it is dark)
- door lights
- puddle lights

They will switch off automatically after a delay and will be activated again if the driver's door is opened.

Path lighting

Headlights, tail lights and number plate lights illuminate the surrounding area for an adjustable time after leaving the vehicle.

Activating

1. Switch off ignition.
2. Remove ignition key.
3. Open driver's door.
4. Pull turn signal lever.
5. Close driver's door.

If the driver's door is not closed the lights switch off after two minutes.

Exit lighting is switched off immediately if the turn signal lever is pulled while the driver's door is open.

Activation, deactivation and duration of this function can be changed in the Settings menu in the Info-Display. Vehicle personalisation ⇨ 105.

The settings can be saved for the key being used ⇨ 24.

Battery discharge protection

Vehicle battery state of charge function

The function guarantees longest vehicle battery life via a generator with controllable power output and optimised power distribution.

To prevent discharge of the vehicle battery when driving, the following systems are reduced automatically in two stages and finally switched off:

- Auxiliary heater
- Heated rear window and mirrors
- Heated seats
- Fan

In the second stage a message which confirms the activation of the vehicle battery discharge protection will be displayed in the Driver Information Centre.

Switching off electric lights

To prevent discharge of the vehicle battery when the ignition is switched off, some interior lights are switched off automatically after some time.

Climate control

Climate control systems **129**
Heating and ventilation system 129
Air conditioning system 130
Electronic climate control system 132
Auxiliary heater 136
Air vents **137**
Adjustable air vents 137
Fixed air vents 137
Maintenance **137**
Air intake 137
Pollen filter 137
Air conditioning regular operation 138
Service 138

Climate control systems

Heating and ventilation system

Controls for:

- temperature
- air distribution
- fan speed
- demisting and defrosting

Heated rear window ⇨ 36.

Temperature

red : warm
blue : cold

Heating will not be fully effective until the engine has reached normal operating temperature.

Air distribution

: to windscreen and front door windows
: to head area via adjustable air vents
: to foot well and windscreen

All combinations are possible.

Fan speed

Adjust the air flow by switching the fan to the desired speed.

Demisting and defrosting

- Press : fan automatically switches to higher speed, the air distribution is directed towards the windscreen.
- Set temperature control to warmest level.
- Switch on heated rear window .
- Open side air vents as required and direct them towards the door windows.

Air conditioning system

In addition to the heating and ventilation system, the air conditioning system has controls for:

: cooling
: air recirculation

Heated seats ⇨ 47, Heated steering wheel ⇨ 73.

Cooling

Press to switch on cooling. The LED in the button illuminates to indicate activation. Cooling is only functional when the engine is running and climate control fan is switched on.

Press again to switch off cooling.

The air conditioning system cools and dehumidifies (dries) as soon as the outside temperature is slightly above the freezing point. Therefore condensation may form and drip from under the vehicle.

If no cooling or drying is required, switch off the cooling system for fuel saving reasons. Activated cooling may inhibit Autostops.

Stop-start system ⇨ 142.

Air recirculation system

Press to activate air recirculation mode. The LED in the button illuminates to indicate activation.

Press again to deactivate air recirculation mode.

⚠Warning

The exchange of fresh air is reduced in air recirculation mode. In operation without cooling the air humidity increases, so the windows may mist up from inside. The quality of the passenger compartment air deteriorates, which may cause the vehicle occupants to feel drowsy.

In warm and very humid ambient air conditions, the windscreen may mist up from outside when cold air is directed towards it. If windscreen mists up from outside, activate windscreen wiper and deactivate .

Maximum cooling

Briefly open the windows so that hot air can disperse quickly.

- Switch on cooling .
- Air circulation system on.
- Press air distribution switch .
- Set temperature control to coldest level.
- Set fan speed to highest level.
- Open all vents.

Demisting and defrosting the windows

- Press : fan automatically switches to higher speed, the air distribution is directed towards the windscreen.
- Set temperature control to warmest level.
- Switch on heated rear window .
- Open side air vents as required and direct them towards the door windows.

Note

If is pressed while the engine is running, an Autostop will be inhibited until is pressed again.

If is pressed with the fan switched on and the engine running, an Autostop will be inhibited until is pressed again or until the fan is switched off.

If is pressed while the engine is in an Autostop, the engine will restart automatically.

If is pressed with the fan switched on while the engine is in an Autostop, the engine will restart automatically.

Stop-start system ⇨ 142.

Electronic climate control system

The dual zone climate control allows different climatisation temperatures for driver side and front passenger side.

In automatic mode, temperature, fan speed and air distribution are regulated automatically.

Controls for:

- temperature on driver side
- air distribution
- fan speed
- temperature on front passenger side

: cooling
AUTO : automatic mode
: manual air recirculation
: demisting and defrosting

Heated rear window ⇨ 36, Heated seats ⇨ 47, Heated steering wheel ⇨ 73.

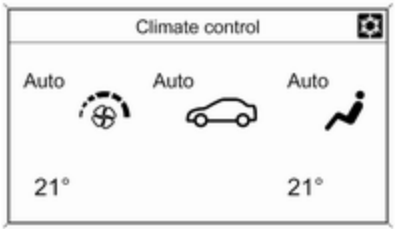

Each change of settings is shown in the Info-Display for a few seconds.

The electronic climate control system is only fully operational when the engine is running.

Automatic mode AUTO

Basic setting for maximum comfort:

- Press **AUTO**, the air distribution and fan speed are regulated automatically.
- Open all air vents to allow optimised air distribution in automatic mode.
- Press ☼ to switch on optimal cooling and demisting. The LED in the button illuminates to indicate activation.
- Set the preselected temperatures for driver and front passenger using the left and right rotary knobs. Recommended temperature is 22 °C.

The fan speed regulation in automatic mode can be changed in the Settings menu.

Vehicle personalisation ⇨ 105.

Temperature preselection

Set temperatures to the desired value.

If the minimum temperature **Lo** is set, the climate control system runs at maximum cooling, if cooling ❄ is switched on.

If the maximum temperature **Hi** is set, the climate control system runs at maximum heating.

Note
If ❄ is switched on, reducing the set cabin temperature can cause the engine to restart from an Autostop or inhibit an Autostop.

Stop-start system ⇨ 142.

Demisting and defrosting the windows

- Press . The LED in the button illuminates to indicate activation.
- Temperature and air distribution are set automatically and the fan runs at high speed.
- Switch on heated rear window .
- To return to previous mode: press . To return to automatic mode: press **AUTO**.

Setting of automatic rear window heating can be changed in the Settings menu in the Info-Display. Vehicle personalisation ⇨ 105.

Note
If is pressed while the engine is running, an Autostop will be inhibited until is pressed again.

If is pressed with the fan switched on and the engine running, an Autostop will be inhibited until is pressed again or until the fan is switched off.

If is pressed while the engine is in an Autostop, the engine will restart automatically.

If is pressed with the fan switched on while the engine is in an Autostop, the engine will restart automatically.

Stop-start system ⇨ 142.

Manual settings

Climate control system settings can be changed by activating the buttons and rotary knobs as follows. Changing a setting will deactivate the automatic mode.

Fan speed ⌘

Press lower button to decrease or upper button to increase fan speed. The fan speed is indicated by the number of segments in the display.

Pressing the lower button for longer: fan and cooling are switched off.

Pressing the upper button for longer: the fan runs at maximum speed.

To return to automatic mode: Press **AUTO**.

Air distribution ⇆, ⇄, ⇆

Press appropriate button for desired adjustment. The LED in the button illuminates to indicate activation.

⇆ : to windscreen and front door windows (air conditioning is activated in the background to help preventing windows from fogging)

⇄ : to head area via adjustable air vents

⇆ : to foot well and windscreen

All combinations are possible.

Return to automatic air distribution: press **AUTO**.

Cooling ❄

Press ❄ to switch on cooling. The LED in the button illuminates to indicate activation. Cooling is only functional when the engine is running and climate control fan is switched on.

Press ❄ again to switch off cooling.

The air conditioning system cools and dehumidifies (dries) when outside temperature is above a specific level. Therefore condensation may form and drip from under the vehicle.

If no cooling or drying is required, switch off the cooling system for fuel saving reasons. When the cooling system is switched off, no engine

restart will be requested by the climate control system during an Autostop. Exception: defrost system is activated and outside temperature above 0 °C.

The display will indicate **ACON** when cooling is activated or **ACOFF** when the cooling is deactivated.

Activation or deactivation of cooling operation after engine start can be changed in the Settings menu in the Info-Display. Vehicle personalisation ⇨ 105.

Stop-start system ⇨ 142.

Air recirculation mode

Press to activate the air recirculation mode. The LED in the button illuminates to indicate activation.

Press again to deactivate recirculation mode.

⚠ Warning

The exchange of fresh air is reduced in air recirculation mode. In operation without cooling the air humidity increases, so the windows may mist up from inside. The quality of the passenger compartment air deteriorates, which may cause the vehicle occupants to feel drowsy.

In warm and very humid ambient air conditions, the windscreen may mist up from outside when cold air is directed towards it. If windscreen mists up from outside, activate windscreen wiper and deactivate .

Basic settings

Some settings can be changed in the Settings menu in the Info-Display. Vehicle personalisation ⇨ 105.

Auxiliary heater

Air heater

Quickheat is an electric auxiliary air heater which automatically warms up the passenger compartment more quickly.

Air vents

Adjustable air vents

At least one air vent must be open while the cooling is on.

To open the vent, turn the adjuster wheel towards the bigger ▮ symbol. Adjust the air amount at the vent outlet by turning the adjuster wheel.

Direct the flow of air by tilting and swivelling the slats.

To close the vent, turn the adjuster wheel towards the smaller ▮ symbol.

⚠Warning

Do not attach any objects to the slats of the air vents. Risk of damage and injury in case of an accident.

Fixed air vents

Additional air vents are located beneath the windscreen and door windows and in the foot wells.

Maintenance

Air intake

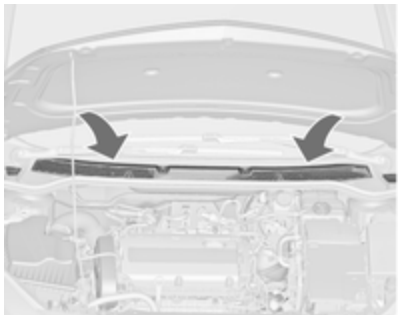

The air intake in front of the windscreen in the engine compartment must be kept clear to allow air intake. Remove any leaves, dirt or snow.

Pollen filter

The pollen filter cleans dust, soot, pollen and spores from the air entering the vehicle through the air intake.

Air conditioning regular operation

In order to ensure continuously efficient performance, cooling must be operated for a few minutes once a month, irrespective of the weather and time of year. Operation with cooling is not possible when the outside temperature is too low.

Service

For optimal cooling performance, it is recommended to annually check the climate control system, starting three years after initial vehicle registration, including:

- functionality and pressure test
- heating functionality
- leakage check
- check of drive belts
- cleaning of condenser and evaporator drainage
- performance check

Note
Refrigerant R-134a contains fluorinated greenhouse gases.

Driving and operating

Driving hints **140**
Control of the vehicle 140
Steering 140
Starting and operating **140**
New vehicle running-in 140
Ignition switch positions 141
Retained power off 141
Starting the engine 141
Overrun cut-off 142
Stop-start system 142
Parking 144
Engine exhaust **145**
Diesel particle filter 146
Catalytic converter 147
Automatic transmission **147**
Transmission display 147
Selector lever 148
Manual mode 149
Electronic driving programmes 149
Fault 150
Interruption of power supply 150
Manual transmission **151**
Brakes **152**
Antilock brake system 152
Parking brake 153
Brake assist 154
Hill start assist 154
Ride control systems **155**
Traction Control system 155
Electronic Stability Control 155
Interactive driving system 157
Driver assistance systems **159**
Cruise control 159
Speed limiter 161
Adaptive cruise control 162
Forward collision alert 169
Following distance indication ... 172
Active Emergency Braking 173
Parking assist 175
Side blind spot alert 182
Traffic sign assistant 183
Lane departure warning 187
Fuel **188**
Fuel for petrol engines 188
Fuel for diesel engines 189
Fuel for liquid gas operation 190
Refuelling 190
Fuel consumption - CO_2-Emissions 193
Trailer hitch **194**
General information 194
Driving characteristics and towing tips 194
Trailer towing 195
Towing equipment 195
Trailer stability assist 198

Driving hints

Control of the vehicle

Never coast with engine not running (except during Autostop)

Many systems will not function in this situation (e.g. brake servo unit, power steering). Driving in this manner is a danger to yourself and others. All systems function during an Autostop, but there will be a controlled reduction in power steering assist and vehicle speed is reduced.

Stop-start system ⇨ 142.

Idle boost

If charging of the vehicle battery is required due to battery condition, the power output of the generator must be increased. This will be achieved by an idle boost which may be audible.

A message is displayed in the Driver Information Centre.

Pedals

To ensure the pedal travel is uninhibited, there must be no mats in the area of the pedals.

Use only floor mats which fit properly and are fixed by the retainers on the driver's side.

Steering

If power steering assist is lost because the engine stops or due to a system malfunction, the vehicle can be steered but may require increased effort.

Control indicator ⊖! ⇨ 89.

Caution

Vehicles equipped with hydraulic power steering:

If the steering wheel is turned until it reaches the end of its travel, and is held in that position for more than 15 seconds, damage may occur to the power steering system and there may be loss of power steering assist.

Starting and operating

New vehicle running-in

Do not brake unnecessarily hard for the first few journeys.

During the first drive, smoke may occur because of wax and oil evaporating off the exhaust system. Park the vehicle in the open for a while after the first drive and avoid inhaling the fumes.

During the running-in period fuel and engine oil consumption may be higher and the cleaning process of the diesel particle filter may take place more often. Autostop may be inhibited to allow for charging the battery.

Diesel particle filter ⇨ 146.

Ignition switch positions

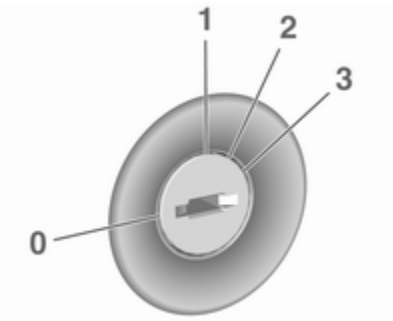

0 : ignition off
1 : steering wheel lock released, ignition off
2 : ignition on, for diesel engine: preheating
3 : starting

Retained power off

The following electronic systems can work until the driver's door is opened or at the latest for ten minutes after the ignition is switched off:

- power windows
- sunroof
- power outlets

Power to the Infotainment system will continue to operate for 30 minutes or until the key is removed from the ignition switch, regardless of whether any door will be opened.

Starting the engine

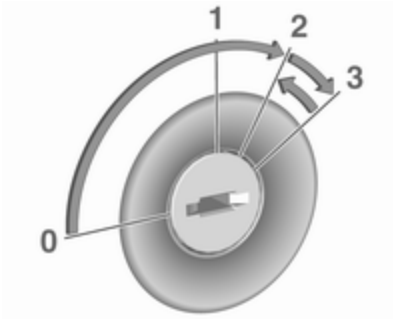

Manual transmission: operate clutch.

Automatic transmission: operate brake and move the selector lever to **P** or **N**.

Do not operate the accelerator pedal.

Diesel engine: turn the key to position **2** for preheating until control indicator extinguishes.

Turn the key briefly to position **3** and release: an automatic procedure operates the starter with a short delay as long as the engine is running, see Automatic Starter Control.

Before restarting or to switch off the engine, turn the key back to position **0**.

During an Autostop, the engine can be started by depressing the clutch pedal.

Starting the vehicle at low temperatures

Starting the engine without additional heaters is possible down to -25 °C for diesel engines and -30 °C for petrol engines. Required is an engine oil with the correct viscosity, the correct fuel, performed services and a sufficiently charged vehicle battery. With temperatures below -30 °C the automatic transmission needs a warming phase of approx. five minutes. The selector lever must be in position **P**.

Automatic Starter Control

This function controls the engine starting procedure. The driver does not need to hold the key in position **3**. Once applied, the system will go on starting automatically until the engine is running. Because of the checking procedure, the engine starts running after a short delay.

Possible reasons for a non-starting engine:

- Clutch pedal not operated (manual transmission).
- Brake pedal not operated or selector lever not in **P** or **N** (automatic transmission).
- Timeout occurred.

Turbo engine warm-up

Upon start-up, engine available torque may be limited for a short time, especially when the engine temperature is cold. The limitation is to allow the lubrication system to fully protect the engine.

Overrun cut-off

The fuel supply is automatically cut off during overrun, i.e. when the vehicle is driven with a gear engaged but accelerator pedal is released.

Depending on driving conditions, the overrun cut-off may be deactivated.

Stop-start system

The stop-start system helps to save fuel and to reduce the exhaust emissions. When conditions allow, it switches off the engine as soon as the vehicle is at a low speed or at a standstill, e.g. at a traffic light or in a traffic jam. It starts the engine automatically as soon as the clutch is depressed. A battery sensor ensures that an Autostop is only performed if the vehicle battery is sufficiently charged for a restart.

Activation

The stop-start system is available as soon as the engine is started, the vehicle starts-off and the conditions as stated below in this section are fulfilled.

Deactivation

Deactivate the stop-start system manually by pressing **eco**. The deactivation is indicated when the LED in the button extinguishes.

Autostop

If the vehicle is at a low speed or at a standstill, activate an Autostop as follows:

- Depress the clutch pedal.
- Move the selector lever to neutral.
- Release the clutch pedal.

The engine will be switched off while the ignition stays on.

An Autostop is indicated by the needle at the **AUTOSTOP** position in the tachometer.

During an Autostop, the heating and brake performance will be maintained.

Caution
The power steering assist may be reduced during an Autostop.

Conditions for an Autostop

The stop-start system checks if each of the following conditions is fulfilled:

- The stop-start system is not manually deactivated.
- The bonnet is fully closed.
- The driver's door is closed or the driver's seat belt is fastened.
- The vehicle battery is sufficiently charged and in good condition.
- The engine is warmed-up.
- The engine coolant temperature is not too high.
- The engine exhaust temperature is not too high, e.g. after driving with high engine load.
- The ambient temperature is above -5 °C.
- The climate control system allows an Autostop.
- The brake vacuum is sufficient.
- The self-cleaning function of the diesel particle filter is not active.
- The vehicle was driven at least at walking speed since the last Autostop.

Otherwise an Autostop will be inhibited.

Certain settings of the climate control system may inhibit an Autostop. See "**Climate control**" chapter for more details ⇨ 132.

Immediately after motorway driving, an Autostop may be inhibited.

New vehicle running-in ⇨ 140.

Vehicle battery discharge protection

To ensure reliable engine restarts, several battery discharge protection features are implemented as part of the stop-start system.

Power saving measures

During an Autostop, several electric features, e.g. auxiliary electric heater or heated rear window are disabled or switched into a power saving mode. The fan speed of the climate control system is reduced to save power.

Restart of the engine by the driver

Depress the clutch pedal to restart the engine.

The engine start is indicated by the needle at the idle speed position in the tachometer.

If the selector lever is shifted out of neutral before depressing the clutch first, control indicator illuminates or is shown as a symbol in the Driver Information Centre.

Control indicator ⇨ 88.

Restart of the engine by the stop-start system

The selector lever must be in neutral to enable an automatic restart.

If one of the following conditions occurs during an Autostop, the engine will be restarted automatically by the stop-start system:

- The stop-start system is manually deactivated.
- The bonnet is opened.
- The driver's seat belt is unfastened and the driver's door is opened.
- The engine temperature is too low.
- The charging level of the vehicle battery is below a defined level.
- The brake vacuum is not sufficient.
- The vehicle is driven at least at walking speed.
- The climate control system requests an engine start.
- The air conditioning is manually switched on.

If the bonnet is not fully closed, a warning message is displayed in the Driver Information Centre.

If an electric accessory, e.g. a portable CD player, is connected to the power outlet, a brief power drop during restart might be noticeable.

Parking

⚠ Warning

- Do not park the vehicle on an easily ignitable surface. The high temperature of the exhaust system could ignite the surface.
- Always apply the parking brake. Activate the manual parking brake without pressing the release button. Apply as firmly as possible on a downhill slope or uphill slope. Depress brake pedal at the same time to reduce operating force.

  For vehicles with electric parking brake, pull switch Ⓟ for approx. one second.

  The electric parking brake is applied when control indicator Ⓟ illuminates ⇨ 88.
- Switch off the engine.
- If the vehicle is on a level surface or uphill slope, engage first gear or set the selector lever to position **P** before removing the ignition key. On an uphill slope, turn the front wheels away from the kerb.

  If the vehicle is on a downhill slope, engage reverse gear or set the selector lever to position **P** before removing the ignition

key. Turn the front wheels towards the kerb.

- Close the windows and the sunroof.
- Remove the ignition key from the ignition switch. Turn the steering wheel until the steering wheel lock is felt to engage.

  For vehicles with automatic transmission, the key can only be removed when the selector lever is in position **P**.

- Lock the vehicle.
- Activate the anti-theft alarm system.
- The engine cooling fans may run after the engine has been switched off ⇨ 201.

Caution

After running at high engine speeds or with high engine loads, operate the engine briefly at a low load or run in neutral for approx. 30 seconds before switching off, in order to protect the turbocharger.

Note

In the event of an accident with airbag deployment, the engine is turned off automatically if the vehicle comes to a standstill within a certain time.

Engine exhaust

⚠ Danger

Engine exhaust gases contain poisonous carbon monoxide, which is colourless and odourless and could be fatal if inhaled.

If exhaust gases enter the interior of the vehicle, open the windows. Have the cause of the fault rectified by a workshop.

Avoid driving with an open load compartment, otherwise exhaust gases could enter the vehicle.

Diesel particle filter

Automatic cleaning process

The diesel particle filter system filters harmful soot particles out of the exhaust gases. The system includes a self-cleaning function that runs automatically during driving without any notification. The filter is cleaned by periodically burning off the soot particles at high temperature. This process takes place automatically under set driving conditions and may take up to 25 minutes. Typically it needs between seven and twelve minutes. Autostop is not available and fuel consumption may be higher during this period. The emission of smells and smoke during this process is normal.

System requires cleaning

Under certain conditions, e.g. driving short distances, the system cannot clean itself automatically.

If cleaning of the filter is required and if previous driving conditions did not enable automatic cleaning, it will be indicated by illumination of ⚙ and a warning message in the Driver Information Centre.

⚙ illuminates along with a warning message when diesel particle filter is full. Start cleaning process as soon as possible.

⚙ flashes along with a warning message when diesel particle filter has reached the maximum filling level. Start cleaning process immediately to avoid damage to the engine.

Activate self-cleaning process

To activate cleaning process, continue driving, keep engine speed above 2000 rpm. Shift down if necessary. Diesel particle filter cleaning is then started.

Cleaning process is completed more quickly at high engine speeds and loads.

Control indicator ⚙ extinguishes as soon as the self-cleaning operation is complete. Keep on driving until self-cleaning operation is complete.

Caution
If possible, do not interrupt cleaning process. Drive until cleaning is completed to avoid the need for service or repair by a workshop.

Cleaning process not possible

If cleaning is not possible for any reason, control indicator illuminates additionally. Engine power may be reduced. Seek the assistance of a workshop immediately.

Catalytic converter

The catalytic converter reduces the amount of harmful substances in the exhaust gases.

Caution
Fuel grades other than those listed on pages ⇨ 188, ⇨ 262 could damage the catalytic converter or electronic components. Unburnt petrol will overheat and damage the catalytic converter. Therefore avoid excessive use of the starter, running the fuel tank dry and starting the engine by pushing or towing.

In the event of misfiring, uneven engine running, a reduction in engine performance or other unusual problems, have the cause of the fault rectified by a workshop as soon as possible. In an emergency, driving can be continued for a short period, keeping vehicle speed and engine speed low.

Automatic transmission

The automatic transmission permits automatic gearshifting (automatic mode) or manual gearshifting (manual mode).

Manual shifting is possible in manual mode by tapping the selector lever ⇨ 149.

Transmission display

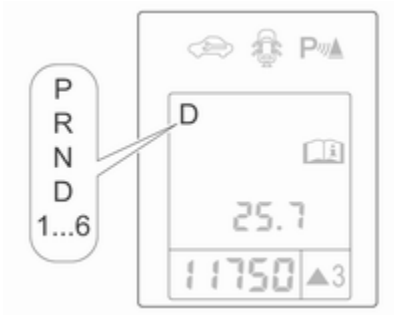

The mode or selected gear is shown in the transmission display.

In automatic mode, the driving programme is indicated by **D** in the Driver Information Centre.

R indicates reverse gear.

N indicates neutral position.

P indicates park position.

Midlevel display: in manual mode the number of the selected gear is indicated.

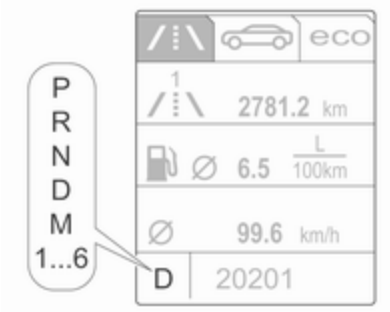

Uplevel display: in manual mode, **M** and the number of the selected gear is indicated.

Selector lever

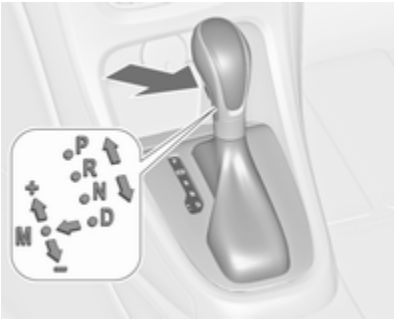

P : park position, press release button, wheels are locked, engage only when the vehicle is stationary and parking brake is applied

R : reverse gear, press release button, engage only when vehicle is stationary

N : neutral

D : automatic mode

M : manual mode: move selector lever from **D** to the left.

+ : manual mode upshifting: move selector lever in position **M** and tap upwards

− : manual mode downshifting: move selector lever in position **M** and tap rearwards

The selector lever is locked in **P** and can only be moved when the ignition is on and the brake pedal is applied.

Without brake pedal applied, the control indicator ⊘ illuminates.

If the selector lever is not in **P** when the ignition is switched off, the control indicators ⊘ and **P** flash.

To engage **P** or **R**, press the release button.

The engine can only be started with the lever in position **P** or **N**. When position **N** is selected, press the brake pedal or apply the parking brake before starting.

Do not accelerate while engaging a gear. Never depress the accelerator pedal and brake pedal at the same time.

When a gear is engaged, the vehicle slowly begins to creep when the brake is released.

Engine braking

To utilise the engine braking effect, select a lower gear in good time when driving downhill, see manual mode.

Rocking the vehicle

Rocking the vehicle is only permissible if the vehicle is stuck in sand, mud or snow. Move the selector lever between **D** and **R** in a repeat pattern. Do not race the engine and avoid sudden acceleration.

Parking

Apply the parking brake and engage **P**.

The ignition key can only be removed when the selector lever is in position **P**.

Manual mode

Move selector lever out of position **D** towards the left to select manual mode **M**.

Tap selector lever

forwards **+** : shift to a higher gear

backwards **−** : shift to a lower gear

The selected gear is indicated in the instrument cluster.

If a higher gear is selected when vehicle speed is too low, or a lower gear when vehicle speed is too high, the shift is not executed. This can cause a message in the Driver Information Centre.

In manual mode, no automatic shifting to a higher gear takes place at high engine revolutions.

Electronic driving programmes

- Following a cold start, the operating temperature programme increases engine speed to quickly bring the catalytic converter to the required temperature.
- The automatic neutral shift function automatically shifts to idling when the vehicle is stopped with a forward gear engaged and the brake pedal is pressed.

- When SPORT mode is engaged, the vehicle shifts at higher engine speeds (unless cruise control is on). SPORT mode ⇨ 157.
- Special programmes automatically adapt the shifting points when driving up inclines or down hills.
- When starting off in snowy or icy conditions or on other slippery surfaces, the electronic transmission control selects a higher gear automatically.

Kickdown

If the accelerator pedal is pressed down completely in automatic mode, the transmission shifts to a lower gear depending on engine speed.

Fault

In the event of a fault, control indicator illuminates. Additionally, a code number or a vehicle message is displayed in the Driver Information Centre. Vehicle messages ⇨ 99.

The transmission no longer shifts automatically. Continued travel is possible with manual shifting.

Only the highest gear is available. Depending on the fault, 2nd gear may also be available in manual mode. Shift only when vehicle is at a standstill.

Have the cause of the fault remedied by a workshop.

Interruption of power supply

In the event of an interruption of power supply, the selector lever cannot be moved out of the **P** position. The ignition key cannot be removed from the ignition switch.

If the vehicle battery is discharged, start the vehicle using jump leads ⇨ 246.

If the vehicle battery is not the cause of the fault, release the selector lever.

1. Apply the parking brake.

2. Release the selector lever trim from the centre console at the front, fold it upwards and rotate it to the left.

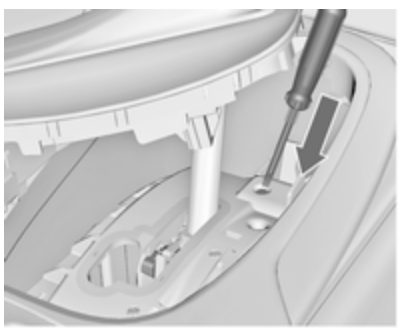

3. Insert a screwdriver into the opening as far as it will go and move the selector lever out of **P** or **N**. If **P** or **N** is engaged again, the selector lever will be locked in position again. Have the cause of the power supply interruption remedied by a workshop.
4. Mount the selector lever trim onto the centre console and refit.

Manual transmission

To engage reverse, with the vehicle stationary, depress clutch pedal, press the release button on the selector lever and engage the gear.

If the gear does not engage, set the lever to neutral, release the clutch pedal and depress again; then repeat gear selection.

Do not slip the clutch unnecessarily.

When operating, depress the clutch pedal completely. Do not use the pedal as a foot rest.

Caution
It is not advisable to drive with the hand resting on the selector lever.

Upshift indication ⇨ 89.

Brakes

The brake system comprises two independent brake circuits.

If a brake circuit fails, the vehicle can still be braked using the other brake circuit. However, braking effect is achieved only when the brake pedal is depressed firmly. Considerably more force is needed for this. The braking distance is extended. Seek the assistance of a workshop before continuing your journey.

When the engine is not running, the support of the brake servo unit disappears once the brake pedal has been depressed once or twice. Braking effect is not reduced, but braking requires significantly greater force. It is especially important to bear this in mind when being towed.

Control indicator ⓘ ⇨ 88.

Antilock brake system

Antilock brake system (ABS) prevents the wheels from locking.

ABS starts to regulate brake pressure as soon as a wheel shows a tendency to lock. The vehicle remains steerable, even during hard braking.

ABS control is made apparent through a pulse in the brake pedal and the noise of the regulation process.

For optimum braking, keep the brake pedal fully depressed throughout the braking process, despite the fact that the pedal is pulsating. Do not reduce the pressure on the pedal.

After starting off the system performs a self-test which may be audible.

Control indicator (ABS) ⇨ 89.

Adaptive brake light

During full braking, all three brake lights flash for the duration of ABS control.

Fault

⚠ Warning

If there is a fault in the ABS, the wheels may be liable to lock due to braking that is heavier than normal. The advantages of ABS are no longer available. During hard braking, the vehicle can no longer be steered and may swerve.

Have the cause of the fault remedied by a workshop.

Parking brake

Manual parking brake

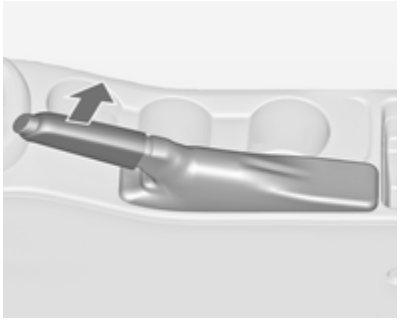

⚠ Warning

Always apply parking brake firmly without operating the release button, and apply as firmly as possible on a downhill or uphill slope.

To release the parking brake, pull the lever up slightly, press the release button and fully lower the lever.

To reduce the operating forces of the parking brake, depress the brake pedal at the same time.

Control indicator ⓘ ⇨ 88.

Electric parking brake

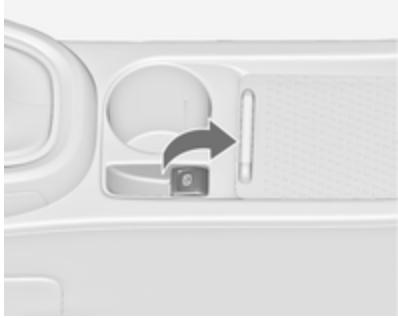

Applying when vehicle is stationary

⚠ Warning

Pull switch Ⓟ for approx. one second, the electric parking brake operates automatically with adequate force. For maximum force, e.g. parking with trailer or on inclines, pull switch Ⓟ twice.

The electric parking brake is applied when control indicator Ⓟ illuminates ⇨ 88.

The electric parking brake can always be activated, even if the ignition is off.

Do not operate electric parking brake system too often without engine running, as this will discharge the vehicle battery.

Before leaving the vehicle, check the electric parking brake status. Control indicator Ⓟ ⇨ 88.

Releasing

Switch on ignition. Keep brake pedal depressed and then push switch Ⓟ.

Drive away function

Vehicles with manual transmission: Depressing the clutch pedal and then slightly releasing the clutch pedal and slightly depressing the accelerator pedal releases the electric parking

brake automatically. This is not possible when the switch Ⓟ is pulled at the same time.

Vehicles with automatic transmission: Engaging **D** and then depressing the accelerator pedal releases the electric parking brake automatically. This is not possible when the switch Ⓟ is pulled at the same time.

Dynamic braking when vehicle is moving

When the vehicle is moving and the switch Ⓟ is kept pulled, the electric parking brake system will decelerate the vehicle, but will not apply statically.

As soon as the switch Ⓟ is released, dynamic braking will be stopped.

Fault

Failure mode of electric parking brake is indicated by control indicator and by a code number or a vehicle message which is displayed in the Driver Information Centre. Vehicle messages ⇨ 99.

Apply electric parking brake: pull and hold the switch Ⓟ for more than five seconds . If control indicator Ⓟ illuminates, electric parking brake is applied.

Release electric parking brake: push and hold the switch Ⓟ for more than two seconds. If control indicator Ⓟ extinguishes, electric parking brake is released.

Control indicator Ⓟ flashes: electric parking brake is not fully applied or released. When continuously flashing, release electric parking brake and retry applying.

Brake assist

If the brake pedal is depressed quickly and forcefully, maximum brake force is automatically applied (full braking).

Maintain steady pressure on the brake pedal for as long as full braking is required. Maximum brake force is automatically reduced when the brake pedal is released.

Hill start assist

The system helps prevent unintended movement when driving away on inclines.

When releasing the brake pedal after stopping on an incline, the brakes remain on for a further two seconds. The brakes release automatically as soon as the vehicle begins to accelerate.

The hill start assist is not active during an Autostop.

Ride control systems

Traction Control system

The Traction Control system (TC) is a component of the Electronic Stability Control (ESC) ⇨ 155.

TC improves driving stability when necessary, regardless of the type of road surface or tyre grip, by preventing the drive wheels from spinning.

As soon as the drive wheels starts to spin, engine output is reduced and the wheel spinning the most is braked individually. This considerably improves the driving stability of the vehicle on slippery road surfaces.

TC is operational after each engine start as soon as control indicator extinguishes.

When TC operates flashes.

⚠Warning

Do not let this special safety feature tempt you into taking risks when driving.

Adapt speed to the road conditions.

Control indicator ⇨ 90.

Deactivation

TC can be switched off when spinning of drive wheels is required:

press briefly to deactivate TC, illuminates. Deactivation is displayed as status message in the Driver Information Centre.

TC is reactivated by pressing again.

TC is also reactivated the next time the ignition is switched on.

Electronic Stability Control

Electronic Stability Control (ESC) improves driving stability when necessary, regardless of the type of road surface or tyre grip. It also prevents the drive wheels from spinning. ESC operates in combination with the Traction Control system (TC) ⇨ 155.

As soon as the vehicle starts to swerve (understeer/oversteer), engine output is reduced and the wheels are braked individually. This considerably improves the driving stability of the vehicle on slippery road surfaces.

ESC is operational after each engine start as soon as the control indicator extinguishes.

When ESC operates flashes.

⚠Warning

Do not let this special safety feature tempt you into taking risks when driving.

Adapt speed to the road conditions.

Control indicator ⇨ 90.

Deactivation

For a more sporty behaviour ESC and TC can be deactivated separately:

- Press briefly: only Traction control system is inactive, ESC remains active, illuminates.
- Press and hold for min. five seconds: TC and ESC are deactivated, and illuminate.

Additionally, the selected mode is displayed as status message in the Driver Information Centre.

If the vehicle comes into threshold with deactivated ESP, the system will reactivate ESP for the time duration of the threshold, when the brake pedal is depressed once.

ESC is reactivated by pressing again. If the TC system was previously disabled, both TC and ESC are reactivated.

ESC is also reactivated the next time the ignition is switched on.

Deactivation, OPC version

For very high-performance driving ESC and TC can be deactivated separately. The following modes are selectable:

- Press briefly: only Traction control system is inactive, ESC remains active, illuminates.
- Press twice briefly within two seconds: TC is inactive, ESC is operable without engine power reduction, and illuminate.
- Press and hold for min. five seconds: TC and ESC are completely inactive, and illuminate.

Additionally, the selected mode is displayed as status message in the Driver Information Centre.

On OPC version TC and ESC remain deactivated even if the vehicle comes into threshold with unstable driveability.

ESC is reactivated by pressing again. If the TC system was previously disabled, both TC and ESC are reactivated.

ESC is also reactivated the next time the ignition is switched on.

Interactive driving system

Flex Ride

Flex Ride driving system allows the driver to select between three driving modes:

- SPORT mode: press **SPORT**, LED illuminates.
- TOUR mode: press **TOUR**, LED illuminates.
- NORMAL mode: both **SPORT** and **TOUR** are not pressed, no LED illuminates.

Deactivate SPORT mode and TOUR mode by pressing the corresponding button once more.

In each driving mode, Flex Ride networks the following electronic systems:

- Continuous Damping Control
- Accelerator Pedal Control
- Steering Control
- Electronic Stability Control (ESC)
- Antilock brake system (ABS) with cornering brake control (CBC)
- Automatic transmission

SPORT mode

The settings of the systems are adapted to a sportier driving style.

TOUR mode

The settings of the systems are adapted to a comfort driving style.

NORMAL mode

All settings of the systems are adapted to standard values.

Drive mode control

Within each manual selected driving mode SPORT, TOUR or NORMAL, the Drive Mode Control (DMC) detects and analyses continuously the real driving characteristic, responses by the driver, and the active dynamic state of the vehicle. If necessary, the control unit of DMC automatically changes the settings within the selected driving mode or, when recognising greater variations, the driving mode is changed for the length of variation.

If, for example, NORMAL mode is selected and DMC detects a sporty driving behaviour, DMC changes several settings of the Normal mode

into sporty settings. The DMC changes to SPORT mode in case of very sporty driving behaviour.

If, for example, TOUR mode is selected and whilst driving on a winding road a sudden hard brake is necessary, DMC will detect the dynamic vehicle condition and changes the settings for suspension to SPORT mode to increase vehicle stability.

When the driving characteristic or the dynamic vehicle state returns to former state, DMC will change the settings to the preselected driving mode.

Personalised settings in the Sport mode

The driver can select the functions of the SPORT mode when **SPORT** is pressed. These settings can be changed in the Settings menu in the Info-Display. Vehicle personalisation ⇨ 105.

Flex Ride - OPC Version

The OPC Version of Flex Ride system works in the same way as the standard Flex Ride system with the difference that the modes have a more sporty characteristic.

OPC Flex Ride driving system allows the driver to select between three driving modes:

- OPC mode: press **OPC**, LED illuminates.
- SPORT mode: press **SPORT**, LED illuminates.
- NORMAL mode: neither **SPORT** nor **OPC** is pressed, no LED illuminates.

Deactivate SPORT mode and OPC mode by pressing the corresponding button once more.

In each driving mode,
OPC Flex Ride networks the following electronic systems:

- Continuous Damping Control
- Accelerator Pedal Control
- Steering Control
- Electronic Stability Control (ESC)
- Antilock brake system (ABS) with cornering brake control (CBC)

NORMAL mode
In NORMAL mode, when neither SPORT nor OPC is pressed, all settings of the systems are adapted to standard values.

SPORT mode
The settings of the systems are adapted to a sportier driving style.

OPC mode
The drive dynamic characteristics are adapted to high performance settings.

In this mode, the illumination of main instruments is switched to red.

Personalised settings in the OPC mode
The driver can select the functions of the OPC mode when **OPC** is pressed. These settings can be changed in the Settings menu in the Info-Display. Vehicle personalisation ⇨ 105.

Driver assistance systems

⚠ Warning

Driver assistance systems are developed to support the driver and not to replace the driver's attention.

The driver accepts full responsibility when driving the vehicle.

When using driver assistance systems, always take care regarding the current traffic situation.

Cruise control

The Cruise control can store and maintain speeds of approx. 30 to 200 km/h. Deviations from the stored speeds may occur when driving uphill or downhill.

For safety reasons, the cruise control cannot be activated until the brake pedal has been operated once. Activating in first gear is not possible.

Do not use the cruise control if it is not advisable to maintain a constant speed.

With automatic transmission, only activate cruise control in automatic mode.

Control indicator ⇨ 92.

Switching on

Press ; control indicator in instrument cluster illuminates white.

Activation

Accelerate to the desired speed and turn thumb wheel to **SET/-**; the current speed is stored and

maintained. Control indicator in instrument cluster illuminates green. Accelerator pedal can be released.

Vehicle speed can be increased by depressing the accelerator pedal. When the accelerator pedal is released, the previously stored speed is resumed.

Cruise control remains activated while gearshifting.

Increase speed

With cruise control active, hold thumb wheel turned to **RES/+** or briefly turn to **RES/+** repeatedly: speed increases continuously or in small increments.

Alternatively, accelerate to the desired speed and store by turning to **SET/-**.

Reduce speed

With cruise control active, hold thumb wheel turned to **SET/-** or briefly turn to **SET/-** repeatedly: speed decreases continuously or in small increments.

Deactivation

Press ; control indicator in instrument cluster illuminates white. Cruise control is deactivated. Last stored speed remains in memory for later speed resume.

Automatic deactivation:

- Vehicle speed is below approx. 30 km/h.
- Vehicle speed is above approx. 200 km/h.
- The brake pedal is depressed.
- The clutch pedal is depressed for a few seconds.
- Selector lever is in **N**.
- Engine speed is in a very low range.
- The Traction Control system (TC) or Electronic Stability Control (ESC) is operating.

Resume stored speed

Turn thumb wheel to **RES/+** at a speed above 30 km/h. The stored speed will be obtained.

Switching off

Press ; control indicator in instrument cluster extinguishes. The stored speed is deleted.

Pressing for activating speed limiter or switching off the ignition also switches off cruise control and deletes the stored speed.

Speed limiter

The speed limiter prevents the vehicle exceeding a preset maximum speed.

The maximum speed can be set at a speed above 25 km/h.

The driver can only accelerate up to the preset speed. Deviations from the limited speed may occur when driving downhill.

The preset speed limit is displayed in the top line of the Driver Information Centre when the system is active.

Activation

Press . If cruise control or adaptive cruise control has been activated before, it is switched off when speed limiter is activated and control indicator extinguishes.

Set speed limit

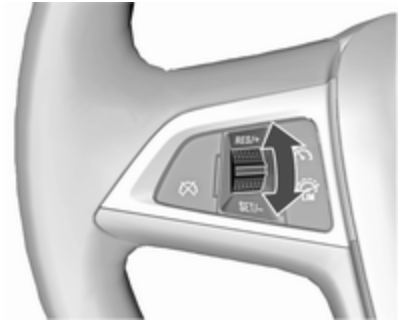

With speed limiter active, hold thumb wheel turned to **RES/+** or briefly turn to **RES/+** repeatedly until the desired maximum speed is displayed in the Driver Information Centre.

Alternatively accelerate to the desired speed and briefly turn thumb wheel to **SET/-**: the current speed is stored as maximum speed. Speed limit is displayed in the Driver Information Centre.

Change speed limit

With speed limiter active, turn thumb wheel to **RES/+** to increase or **SET/-** to decrease the desired maximum speed.

Exceeding the speed limit

In the event of an emergency, it is possible to exceed the speed limit by depressing the accelerator pedal firmly beyond the point of resistance.

The limited speed will flash in the Driver Information Centre and (depending on vehicle) additionally a chime sounds during this period.

Release the accelerator pedal and the speed limiter function is reactivated once a speed lower than the limit speed is obtained.

Deactivation

Press : speed limiter is deactivated and the vehicle can be driven without speed limit.

The limited speed is stored and a corresponding message appears in the Driver Information Centre.

Resume limit speed

Turn thumb wheel to **RES/+**. The stored speed limit will be obtained.

Switching off

Press , the speed limit indication in the Driver Information Centre extinguishes. The stored speed is deleted.

By pressing to activate cruise control or adaptive cruise control or by switching off the ignition, speed limiter is also deactivated and the stored speed is deleted.

Adaptive cruise control

Adaptive cruise control is an enhancement to traditional cruise control with the additional feature of maintaining a certain distance behind the vehicle ahead.

Adaptive cruise control automatically decelerates the vehicle when approaching a slower moving vehicle. It then adjusts the vehicle speed to follow the vehicle ahead at the selected following distance. The vehicle speed increases or decreases to follow the vehicle in front, but will not exceed the set speed. It may apply limited braking with activated brake lights.

The adaptive cruise control can store and maintain speeds over approx. 50 km/h and brakes automatically to follow a slower vehicle driving ahead to a minimum speed of 30 km/h.

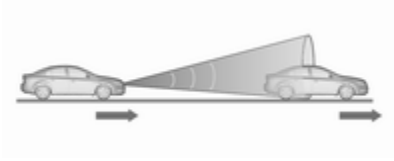

Adaptive cruise control uses a radar sensor to detect the vehicles ahead. If no vehicle is detected in the driving path, the adaptive cruise control will behave like a traditional cruise control.

For safety reasons, the system cannot be activated before the brake pedal has been depressed once since switching on ignition. Activation in first gear is not possible.

Adaptive cruise control is mainly advised to be used on long straight roads, e.g. highways or country roads with steady traffic. Do not use the system if it is not advisable to maintain a constant speed.

Control indicator ⇨ 93, ⇨ 92.

⚠ Warning

The complete driver attention is always required while driving with adaptive cruise control. The driver stays fully in control of the vehicle because the brake pedal, the accelerator pedal and the cancel switch have priority over any adaptive cruise control operation.

Switching on

Press to switch on adaptive cruise control. The control indicator illuminates white.

Activation by setting the speed

Adaptive cruise control can be activated between 50 km/h and 180 km/h.

Accelerate to the desired speed and turn thumb wheel to **SET/-**, the current speed is stored and maintained. Control indicator illuminates green.

The adaptive cruise control symbol, the following distance setting and set speed are indicated in the top line of the Driver Information Centre.

The accelerator pedal can be released. Adaptive cruise control remains activated while gearshifting.

Overriding set speed

It is always possible to drive faster than the selected set speed by depressing the accelerator pedal. When the accelerator pedal is released, the vehicle returns to the desired distance if a slower vehicle is ahead. Otherwise it returns to the stored speed.

Once the system is activated, adaptive cruise control decelerates or brakes if it detects a vehicle ahead, which is slower or closer than the desired following distance.

⚠ Warning

Accelerating by the driver deactivates automatic braking by the system. This is indicated as a pop-up warning in the Driver Information Centre.

Increase speed

With adaptive cruise control active, hold thumb wheel turned to **RES/+**: speed increases continuously in large increments, or activate repeatedly **RES/+**: speed increases in small increments.

If the vehicle is driven with adaptive cruise control active much faster than the desired speed, e.g. after depressing the accelerator pedal, then the current speed can be stored and maintained by turning the thumb wheel to **SET/-**.

Reduce speed

With adaptive cruise control active, hold thumb wheel turned to **SET/-**: speed decreases continuously in large increments, or activate repeatedly **SET/-**: speed decreases in small increments.

If the vehicle is driven with adaptive cruise control active much slower than the desired speed, e.g. because of a slower vehicle ahead, then the current speed can be stored and maintained by turning the thumb wheel to **SET/-**.

Resume stored speed

If the system is switched on but inactive, then turn thumb wheel to **RES/+** at a speed above 50 km/h to resume the stored speed.

Setting the following distance

When adaptive cruise control detects a slower moving vehicle in the driving path, it will adjust the vehicle speed to maintain the following distance selected by the driver.

The following distance can be set to near, medium or far.

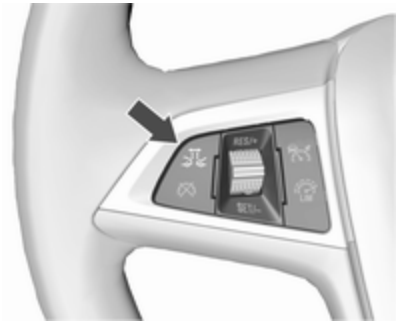

Press ⛐; the current setting is shown in the Driver Information Centre. Press ⛐ again to change the following distance. The setting is also displayed in the top line of the Driver Information Centre.

The selected following distance is indicated by filled distance bars in the adaptive cruise control page.

Note that the following distance setting is shared with the sensitivity setting of forward collision alert.

Example: If setting 3 (far) is selected, then the driver is warned sooner before a possible collision, also if adaptive cruise control is inactive or switched off.

⚠Warning

The driver accepts full responsibility for the appropriate following distance based on traffic, weather and visibility conditions. Following distance must be adjusted or the system switched off when required by the prevailing conditions.

Detecting the vehicle ahead

The green illuminated vehicle ahead control indicator is displayed in the speedometer when the system detects a vehicle in the driving path.

If this symbol does not display, or displays briefly, adaptive cruise control will not respond to vehicles ahead.

Deactivation

Adaptive cruise control is deactivated by the driver when:

- is pressed.
- The brake pedal is depressed.
- The clutch pedal is depressed for more than four seconds.
- The gear selector lever of automatic transmission is moved to **N**.

The system is also automatically deactivated when:

- Vehicle speed slows down below 45 km/h or accelerates above 190 km/h.
- The Traction Control system (TC) is operating for more than 20 seconds.
- The Electronic Stability Control (ESC) is operating.

- There is no traffic and nothing detected on the road sides for several minutes. In this case, there are no radar echoes and the sensor may report that it is blocked.
- The collision imminent braking system is applying the brakes.
- The radar sensor is blocked by an ice or water film.
- A fault is detected in the radar, engine or brake system.

When adaptive cruise control is deactivated automatically, the control indicator illuminates white and a warning symbol is displayed as a pop-up in the Driver Information Centre.

The stored speed is maintained.

⚠ Warning

When adaptive cruise control is deactivated, the driver must take over full brake and engine control.

Switching off

Press to switch off adaptive cruise control. The control indicator extinguishes. The stored speed is deleted.

Switching off the ignition also switches off adaptive cruise control and deletes the stored speed.

Driver's attention

- Use adaptive cruise control carefully on bends or mountain roads, as it can lose the vehicle ahead and need time to detect it again.
- Do not use the system on slippery roads as it can create rapid changes in tyre traction (wheel spinning), so that you could lose control.
- Do not use adaptive cruise control during rain, snow or heavy dirt, as the radar sensor can be covered by a water film, dust, ice or snow. This reduces or suppresses completely the visibility. In case of sensor blockage, clean the sensor cover.

System limits

- The system's automatic brake force does not permit hard braking and the braking level may not be sufficient to avoid a collision.

- After a sudden lane change, the system needs a certain time to detect the next preceding vehicle. So if a new vehicle is detected, the system may accelerate instead of braking.
- Adaptive cruise control does ignore the oncoming traffic.
- Adaptive cruise control does not brake for stopped vehicles, pedestrians or animals.

Bends

The adaptive cruise control calculates a predicted path based on the centrifugal force. This predicted path considers the current bend characteristic, but cannot consider a future bend change. The system may lose the current vehicle ahead or consider a vehicle which is not in the actual lane. This can happen when entering or exiting a bend or if the bend gets stronger or weaker. If it no longer detects any vehicle ahead, then control indicator 🚗 will extinguish.

If the centrifugal force is too high in a bend, the system slows down the vehicle slightly. This braking level is not designed to avoid spinning off the bend. The driver is responsible for reducing the selected speed before entering a bend and in general to adapt the speed to the road type and to existing speed limits.

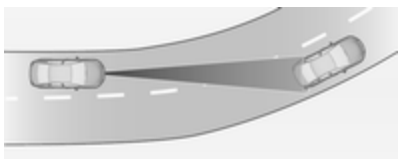

Motorways

On motorways, adapt the set speed to the situation and the weather. Always consider that adaptive cruise control has a limited visibility range, a limited braking level and a certain reaction time to verify if a vehicle is on the driving path or not. Adaptive cruise control may not be able to brake the vehicle in time to avoid a collision with a much slower vehicle or after a lane change. This is particularly true if driving fast or if the visibility is reduced due to weather conditions.

While entering or exiting a motorway, adaptive cruise control may lose the vehicle ahead and accelerate up to the set speed. For this reason, decrease the set speed before the exit or before the entry.

Vehicle path changes

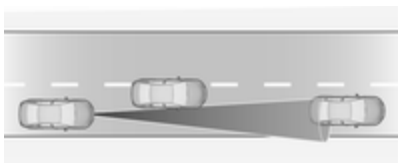

If another vehicle enters your driving path, adaptive cruise control will first consider the vehicle when it is completely in your path. Be ready to take action and depress the brake pedal, if you need to brake more quickly.

Hill and trailer considerations

System performance on hills and when towing a trailer depends on your vehicle speed, vehicle load, traffic conditions and the road gradient. It may not detect a vehicle in your path while driving on hills. On steep hills, you may have to use the accelerator pedal to maintain your vehicle speed. When going downhill, especially when towing a trailer, you may have to brake to maintain or reduce your speed.

Note that applying the brake deactivates the system. It is not recommended to use adaptive cruise control on steep hills especially when towing a trailer.

Radar unit

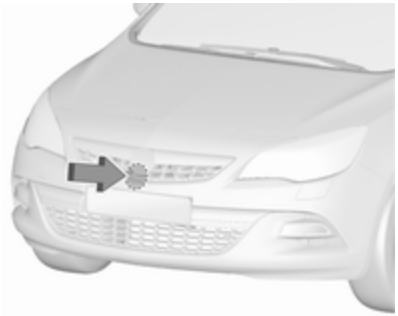

The radar unit is mounted behind the radiator grille below the brand emblem.

⚠ Warning

The radar unit was aligned carefully during manufacture. Therefore, after a frontal accident, do not use the system. The front bumper may appear to be intact, however the sensor behind can be out of position and react incorrectly. After an accident, consult a workshop to verify and correct the adaptive cruise control sensor position.

Settings

Settings can be changed in the **Auto collision preparation** menu in the vehicle personalisation, ⇨ 105.

Fault

If the adaptive cruise control does not work due to temporary conditions (e.g. blockage by ice) or if there is a permanent system error, then a message is displayed in the Driver Information Centre.

Vehicle messages ⇨ 99.

Forward collision alert

The forward collision alert can help to avoid or reduce the harm caused by front-end crashes.

A vehicle ahead is indicated by a control indicator 🚗.

If a vehicle directly ahead is approached too quickly, a warning chime and alert in the Driver Information Centre is provided.

A precondition is that forward collision alert is activated in the vehicle personalisation menu ⇨ 105 or that it is not deactivated by pressing (depending on the system, see following).

Depending on the vehicle's equipment, there are two variants of the forward collision alert available:

- **Forward collision alert based on radar system**

  on vehicles equipped with adaptive cruise control ⇨ 162.

- **Forward collision alert based on front camera system**

  on vehicles with traditional cruise control or none ⇨ 159.

Forward collision alert based on radar system

The system uses the radar sensor behind the radiator grille to detect a vehicle directly ahead, in your path, within a maximum distance of 150 metres.

Activation

Forward collision alert operates automatically above walking speed, provided that **Auto collision preparation** setting is not deactivated in the vehicle personalisation menu ⇨ 105.

Selecting the alert sensitivity

The alert sensitivity can be set to near, medium or far.

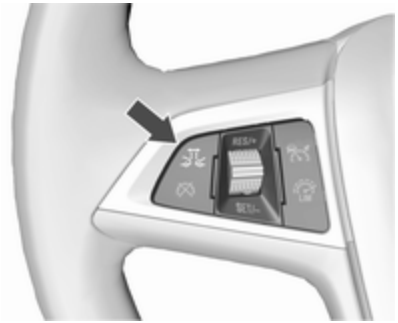

Press ⚠; the current setting is shown in the Driver Information Centre. Press ⚠ again to change the alert sensitivity. The setting is also displayed in the top line of the Driver Information Centre.

Note that the alert timing sensitivity setting is shared with the following distance setting of the adaptive cruise control. So changing the alert timing sensitivity changes the adaptive cruise control following distance setting.

Alerting the driver

A green illuminated vehicle ahead control indicator 🚗 illuminates in the instrument cluster when the system has detected a vehicle in the driving path. When the distance to a preceding moving vehicle gets too small or when approaching another vehicle too rapidly and a collision is imminent, the collision alert symbol pops-up in the Driver Information Centre. Simultaneously a warning chime sounds.

Depress the brake pedal, if it is required by the situation.

Settings

Settings can be changed in the **Auto collision preparation** menu in the vehicle personalisation ⇨ 105.

Forward collision alert based on front camera system

Forward collision alert uses the front camera system in the windscreen to detect a vehicle directly ahead, in your path, within a distance of approx. 60 metres.

Activation

Forward collision alert operates automatically above 40 km/h, if it is not deactivated by pressing ⚙, see below.

Selecting the alert sensitivity

The alert sensitivity can be set to near, medium or far.

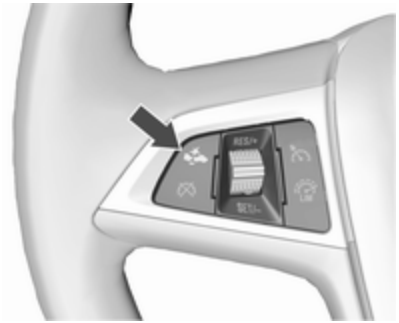

Press ⚙; the current setting is shown in the Driver Information Centre. Press ⚙ again to change the alert sensitivity.

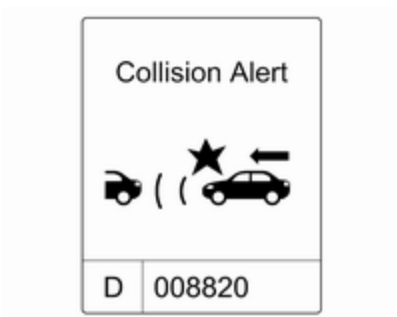

Alerting the driver

A green illuminated vehicle ahead control indicator 🚗 illuminates in the instrument cluster when the system has detected a vehicle in the driving path.

When the distance to a preceding moving vehicle gets too small or when approaching another vehicle too rapidly and a collision is imminent, the collision alert symbol pops-up in the Driver Information Centre.

Simultaneously a warning chime sounds. Depress the brake pedal, if it is required by the situation.

Deactivation
The system can be deactivated. Press repeatedly until the following message appears in the Driver Information Centre.

General information for both variants of forward collision alert

⚠Warning

Forward collision alert is just a warning system and does not apply the brakes. When approaching a vehicle ahead too rapidly, it may not provide you enough time to avoid a collision.

The driver accepts full responsibility for the appropriate following distance based on traffic, weather and visibility conditions.

The complete attention of the driver is always required while driving. The driver must always be ready to take action and apply the brakes.

System limitations
The system is designed to warn only for vehicles, but may react also to other metallic objects.

In the following cases, forward collision alert may not detect a vehicle ahead or sensor performance is limited:

- on winding roads
- when weather limits visibility, e.g. fog, rain, or snow
- when the sensor is blocked by snow, ice, slush, mud, dirt, or windscreen damage

Following distance indication

The following distance indication displays the distance to a preceding moving vehicle. The system uses, depending on the vehicle equipment, either the radar behind the radiator grille or the front camera in the windscreen to detect the distance of a vehicle directly ahead in your path. It is active at speeds above 40 km/h.

When a preceding vehicle is detected ahead, the distance is indicated in seconds, displayed on a page in the Driver Information Centre ⇨ 93. Press **MENU** on the turn signal lever to select **Vehicle Information Menu** and turn the adjuster wheel to choose following distance indication page.

The minimum indicated distance is 0.5 s.

If there is no vehicle ahead or the vehicle ahead is out of range, two dashes will be displayed: -.- s.

Active Emergency Braking

Active emergency braking can help to reduce the damage from crashes with vehicles and obstacles directly ahead, when a collision can no longer be avoided either by manual braking or by steering. Before the active emergency braking applies, the driver is warned by the forward collision alert ⇨ 169.

The feature uses various inputs (e.g. radar sensor, brake pressure, vehicle speed) to calculate the probability of a frontal collision.

Active emergency braking operates automatically above walking speed, provided that **Auto collision preparation** setting is not deactivated in the vehicle personalisation menu ⇨ 105.

The system includes:

- **brake preparation system**
- **emergency automatic braking**
- **forward looking brake assist**

⚠Warning

This system is not intended to replace the driver responsibility of driving the vehicle and looking ahead. Its function is limited to supplemental use only. The driver shall continue to apply the brake pedal as the driving situation dictates.

Brake preparation system

When approaching a vehicle ahead so quickly that a collision is likely, the brake preparation system slightly pressurises the brakes. This reduces the response time, when a manual or automatic braking is requested.

The brake system is prepared so that braking can occur more rapidly.

Emergency automatic braking

After the brake preparation and just before the imminent collision, this function automatically applies limited braking to reduce the impact speed of the collision.

Forward looking brake assist

In addition to brake preparation system and emergency automatic braking, the forward looking brake assist function makes the brake assist more sensitive. In this way, depressing the brake pedal slightly results immediately in a strong braking. This function helps the driver brake quicker and stronger before the imminent collision.

⚠Warning

Active emergency braking is not designed to apply strong autonomous braking or to avoid automatically a collision. It is designed to reduce the vehicle speed before collision. It may not react on stopped vehicles, pedestrians or animals. After a sudden lane change, the system needs a certain time to detect the next preceding vehicle.

The complete attention of the driver is always required while driving. The driver shall always be ready to take action and apply the brakes and steer to avoid collisions. The system is designed to work with all occupants wearing their seat belts.

System limitations

The active emergency braking has limited or no function during rain, snow or heavy dirt, as the radar sensor can be covered by a water film, dust, ice or snow. In case of sensor blockage, clean the sensor cover.

In some seldom cases the active emergency braking system may provide a short automatic braking in situations that seem to be unnecessary, for instance due to traffic signs in a curve or due to vehicles in another lane. This is acceptable operation, the vehicle does not need service. Firmly apply the accelerator pedal to override the automatic braking.

Settings

Settings can be changed in the **Auto collision preparation** menu in the vehicle personalisation, ⇨ 105.

Fault

In the event of a system service requirement, a message is displayed in the Driver Information Centre.

If the system does not work as it should do, vehicle messages are displayed in the Driver Information Centre.

Vehicle messages ⇨ 99.

Parking assist

Rear parking assist

⚠ Warning

The driver bears full responsibility for the parking manoeuvre.

Always check the surrounding area while reversing and using the rear parking assist system.

The rear parking assist makes parking easier by measuring the distance between the vehicle and rear obstacles. It informs and warns the driver by giving acoustic signals.

The system has four ultrasonic parking sensors in the rear bumper.

Activation

When reverse gear is engaged, the system is ready to operate automatically.

An illuminated LED in the parking assist button P⁾⁾⁾▲ indicates that the system is ready to operate.

Indication

The system warns the driver with acoustic signals against potentially hazardous obstacles behind the vehicle. The interval between the sounds becomes shorter as the vehicle gets closer to that obstacle. When the distance is less than approx. 30 cm, the sound is continuous.

Additionally, the distance to obstacles may be shown in the Driver Information Centre.

Deactivation

The system automatically switches off when reverse gear is disengaged.

To switch on the system again, engage reverse gear.

Manual deactivation is also possible by pressing P⁾⁾⁾▲.

When the system is deactivated, the LED in the button extinguishes.

Additionally, **Park Assist Off** pops-up in the Driver Information Centre when the system is deactivated manually.

Fault

In the event of a fault in the system or if the system does not work due to temporary conditions, e.g. ice covered sensors, control indicator P illuminates or a message is displayed in the Driver Information Centre.

Vehicle messages ⇨ 99.

Control indicator P ⇨ 90.

Front-rear parking assist

⚠Warning

The driver bears full responsibility for the parking manoeuvre.

Always check the surrounding area when driving backwards or forwards while using parking assist system.

The front-rear parking assist measures the distance between the vehicle and obstacles in front and behind the vehicle. The system gives acoustic signals and display messages.

The system has four ultrasonic parking sensors each in the rear and front bumper.

It uses two different acoustic warning signals for the front and rear monitoring areas, each with a different tone frequency. The signal for front obstacles sounds via the front speakers, for rear obstacles it sounds from the rear speakers.

Parking assist button and operation logic

Front-rear parking assist is equipped with P. If the vehicle is additionally equipped with advanced parking assist (see the following separate description) the system is equipped with . Both systems will be operated by pressing .

Short press of P or deactivates or activates the front parking assist.

Long press of (approx. one second) activates or deactivates the advanced parking assist.

Button logic to operate the systems is as follows:

- Front-rear parking assist is active: short press deactivates front-rear parking assist.
- Front-rear parking assist is active: long press activates advanced parking assist if a forward gear is engaged.
- Advanced parking assist is active: short press activates front-rear parking assist.
- Advanced parking assist is active: long press deactivates advanced parking assist.
- Advanced parking assist and front-rear parking assist are active: short press deactivates both systems.

Activation

When reverse gear is engaged, the front and rear parking assist is ready to operate.

The front parking assist is also activated automatically at a speed up to 11 km/h.

An illuminated LED in the parking assist button P or indicates that the system is ready to operate.

If the vehicle exceeds a speed of 11 km/h, the front parking assist is deactivated. The front parking assist is always reactivated when vehicle speed drops below 11 km/h.

Indication

The system warns the driver with acoustic signals against potentially hazardous obstacles behind and in front of the vehicle. Depending on which side of the vehicle is closer to an obstacle, you will hear acoustic warning signals on the respective side of the vehicle. The interval between the sounds becomes shorter as the vehicle gets closer to that obstacle. When the distance is less than approx. 30 cm, the sound is continuous.

Additionally, the distance to obstacles may be shown in the Driver Information Centre ⇨ 93.

The distance to a front and rear obstacle is indicated by changing distance lines around the vehicle.

Rear obstacles are indicated acoustically and visually at the same time.

Front obstacles are indicated visually first. At distances less than 80 cm an acoustic signal also sounds.

The distance indication in the Driver Information Centre can be inhibited by vehicle messages with a higher priority. After approving the message by pressing **SET/CLR** on the turn signal lever, distance indication appears again.

Deactivation

The rear parking assist automatically switches off when reverse gear is disengaged.

The front parking assist is deactivated automatically at a speed above 11 km/h.

Manual deactivation is possible by pressing P or briefly.

When the system is deactivated, the LED in the button extinguishes.

Additionally, **Park Assist Off** pops-up in the Driver Information Centre when the system is deactivated manually.

After a manual deactivation, the front parking assist is activated again if P or ⊟P⊿ is pressed or if reverse gear is engaged.

Fault

In the event of a fault in the system or if the system does not work due to temporary conditions, e.g. ice covered sensors, control indicator P illuminates or a message is displayed in the Driver Information Centre.

Vehicle messages ⇨ 99.

Control indicator P ⇨ 90.

Advanced parking assist

⚠ Warning

The driver bears full responsibility for accepting the parking slot suggested by the system and the parking manoeuvre.

Always check the surrounding area in all directions when using advanced parking assist.

The advanced parking assist system manoeuvres the driver into a parking slot by giving instructions in the Driver Information Centre and via acoustic signals. The driver must control acceleration, braking, steering and gearshifting.

The system uses the sensors of the front-rear parking assist in combination with two additional sensors on both sides of the front and rear bumper.

Button ⊟P⊿ and operation logic

Advanced parking assist and front-rear parking assist (see previous description) are both operated by pressing ⊟P⊿.

Short press of ⊟P⊿ deactivates or activates the front parking assist.

Long press of ⊟P⊿ (approx. one second) activates or deactivates the advanced parking assist.

Button logic to operate the systems is as follows:

- Front-rear parking assist is active: short press deactivates front-rear parking assist.
- Front-rear parking assist is active: long press activates advanced parking assist if a forward gear is engaged.

- Advanced parking assist is active: short press activates front-rear parking assist.
- Advanced parking assist is active: long press deactivates advanced parking assist.
- Advanced parking assist and front-rear parking assist are active: short press deactivates both systems.

Activation

When searching for a parking slot, the system must be activated by pressing ⊡P⊿ for approx. one second.

The system can only be activated and can only search for a parking slot at a speed up to 30 km/h.

The maximum allowed parallel distance between the vehicle and a row of parked cars is 1.8 metres.

Functionality

When the vehicle passes a row of cars and the system is activated, the advanced parking assist system begins searching for a suitable parking slot. When a suitable slot is detected, visual feedback in the Driver Information Centre and an acoustic signal are given.

If the driver does not stop the vehicle within ten metres after a parking slot is proposed, the system starts to search for another suitable parking slot.

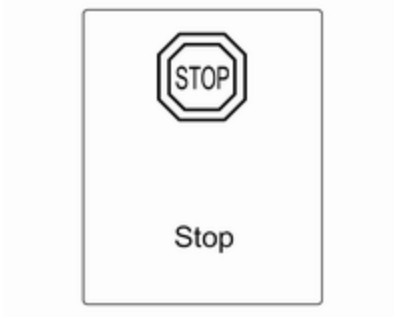

The parking slot suggestion of the system is accepted when the vehicle is stopped by the driver within ten metres after the "Stop" message is given. The system calculates the optimal route into the parking slot. Then it manoeuvres the driver into the slot by giving detailed instructions.

The instructions in the display show:

- A hint when driving faster than 30 km/h.
- The demand to stop the vehicle, when a parking slot is detected.
- The direction of driving during the parking manoeuvre.
- The steering wheel position during parking.
- For some of the instructions a progress bar is shown.

A successful parking manoeuvre is indicated by the 'End position' symbol.

Always pay attention to the sound of the front-rear parking assist. Continuous sound means that the distance to an obstacle is less than approx. 30 cm.

Changing the parking side

The system is configured to detect parking slots by default on the passenger side. To detect parking slots on the driver side, switch on turn indicator to the driver side for the duration of searching.

As soon as turn indicator is switched off, the system searches for parking slots on the passenger side again.

Display priorities

After activating the advanced parking assist, a message appears in the Driver Information Centre. Advanced parking assist indication in the Driver Information Centre can be inhibited by vehicle messages with a higher priority. After approving the message by pressing **SET/CLR** on the turn signal lever, advanced parking assist instructions appear again and the parking manoeuvre can be continued.

Deactivation

The system is deactivated by:

- short press of ⊟P⊿ if advanced parking assist and front-rear parking assist are activated
- long press of ⊟P⊿ if advanced parking assist is activated
- successfully ending parking manoeuvre
- driving faster than 30 km/h
- switching off the ignition

Deactivation by the driver or by the system during manoeuvring will be indicated by **Parking Deactivated** in the Driver Information Centre.

Fault

A message appears in the Driver Information Centre when:

- There is a fault in the system.
- The driver did not successfully complete the parking manoeuvre.
- The system is not operational.

If an object is detected during parking instructions, **Stop** is indicated in the Driver Information Centre. Removing the object will resume the parking manoeuvre. If the object is not removed, the system will be deactivated. Press ⊟P⚠ for approx. one second to activate the system and search for a new parking slot.

Basic notes on parking assist systems

⚠Warning

Under certain circumstances, various reflective surfaces on objects or clothing as well as external noise sources may cause the system to fail to detect obstacles.

Special attention must be paid to low obstacles which can damage the lower part of the bumper.

Caution

Performance of the system can be reduced when sensors are covered, e.g. by ice or snow.

Performance of the parking assist system can be reduced due to heavy loading.

Special conditions apply if there are taller vehicles in the vicinity (e.g. off-road vehicles, mini vans, vans). Object identification and correct distance indication in the upper part of these vehicles cannot be guaranteed.

Objects with a very small reflection cross-section, e.g. objects of narrow size or soft materials, may not be detected by the system.

Parking assist systems do not detect objects outside the detection range.

Note

The parking assist system can be activated and deactivated by changing the settings in the Info-Display. If a trailer coupling is attached, it must be selected in the menu.

Vehicle personalisation ⇨ 105.

Note
The parking assist system automatically detects factory-fitted towing equipment. It is deactivated when the connector is plugged in.

It is possible that the sensor detects a non-existing object (echo disturbance) caused by external acoustical or mechanic disturbances.

Advanced parking assist system may not respond to changes in the parking space after initiating a parallel parking manoeuvre.

Note
After use the advanced parking assist requires a calibration. For optimal parking guidance, a driving distance of at least 35 km, including a number of bends, is required.

Side blind spot alert

The Side blind spot alert system detects and reports objects on either side of the vehicle, within a specified "blind spot" zone. The system alerts visually in each exterior mirror, when detecting objects that may not be visible in the interior and exterior mirrors.

The system's sensors are located in the bumper on the left and right side of the vehicle.

⚠ Warning

Side blind spot alert does not replace driver vision.

The system does not detect:

- vehicles outside the side blind zones which may be rapidly approaching
- pedestrians, cyclists or animals

Before changing a lane, always check all mirrors, look over the shoulder and use the turn signal.

When the system detects a vehicle in the side blind zone while driving forward, either while passing a vehicle or being passed, an amber warning symbol will illuminate in the relevant exterior mirror. If the driver then activates the turn signal, the warning symbol starts flashing amber as a warning not to change lanes.

Note
If the overtaking vehicle is at least 10 km/h faster than the vehicle being overtaken, the warning symbol in the relevant exterior mirror may not illuminate.

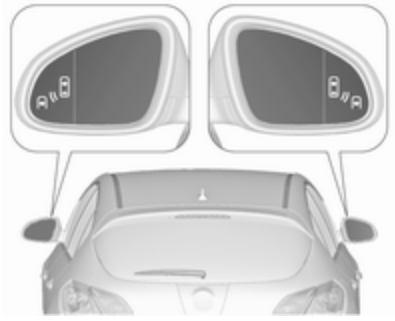

Side blind spot alert is active from speeds of 10 km/h up to 140 km/h. Driving faster than 140 km/h deactivates the system, indicated by low lighting warning symbols in both exterior mirrors. Reducing the speed again will extinguish the

warning symbols. If a vehicle is then detected in the blind zone, the warning symbol will illuminate as normal on the relevant side.

When the vehicle is started, both exterior mirror displays will briefly come on to indicate that the system is operating.

The system can be activated or deactivated in the menu **Settings** in the Info-Display. Vehicle personalisation ⇨ 105.

Deactivation is indicated by a message in the Driver Information Centre.

Detection zones

The system sensor covers a zone of approx. three metres on both sides of the vehicle. This zone starts at each exterior mirror and extends rearwards by approx. three metres. The height of the zone is approx. between 0.5 metres and two metres off the ground.

The system is deactivated if the vehicle is towing a trailer.

Side blind spot alert is designed to ignore stationary objects such as guardrails, posts, curbs, walls and beams. Parked vehicles or oncoming vehicles are not detected.

Fault

Occasional missed alerts can occur under normal circumstances.

Side blind spot alert does not operate when the left or right corners of the rear bumper are covered with mud, dirt, snow, ice or slush. Cleaning instructions ⇨ 249.

In the event of a fault in the system or if the system does not work due to temporary conditions, a message is displayed in the Driver Information Centre. Seek the assistance of a workshop in case of a permanent fault.

Traffic sign assistant

Functionality

The traffic sign assistant system detects designated traffic signs via a front camera and displays them in the Driver Information Centre.

Traffic signs which will be detected are:

Limit and no passing signs

- speed limit
- no passing
- end of speed limit
- end of no passing

Road signs
Beginning and end of:

- motorways
- A-roads
- play streets

Add-on signs

- additional hints to traffic signs
- restriction of trailer towing
- tractor constraints
- wet warning
- ice warning
- direction arrows

Speed limit signs are displayed in the Driver Information Centre until the next speed limit sign or end of speed limit is detected or up to a defined sign timeout.

Indication of multiple signs on the display is possible.

An exclamation mark in a frame indicates that there is an add-on sign detected which cannot be recognised by the system.

The system is active up to a speed of 200 km/h depending on the lighting conditions. At night the system is active up to a speed of 160 km/h.

As soon as vehicle speed becomes slower than 55 km/h the display will be reset and the content of the traffic sign page will be cleared. The next recognized speed indication will be displayed.

Display indication

Traffic signs are displayed on the **Traffic sign detection** page in the Driver Information Centre.

Select **Settings** by pressing **MENU** and select **Traffic sign detection** via the adjuster wheel on the turn signal lever ⇨ 93.

When another page on the Driver Information Centre menu was selected and then **Traffic sign detection** page is chosen again, the last recognised traffic sign will be displayed.

Alert function

Once activated, speed limit and no passing signs are displayed as pop-up alerts in the Driver Information Centre.

The alert function can be activated or deactivated in the Settings menu of the traffic sign assistant page by pressing **SET/CLR** on the turn signal lever.

When the Settings page is displayed, select **Off** to deactivate alert function. Reactivate by selecting **On**.

When switching on the ignition, alert function is deactivated.

Pop-up indication is displayed for approx. eight seconds in the Driver Information Centre.

System reset

The content of the traffic sign memory can be cleared in the Settings menu of the traffic sign assistant page by pressing and holding **SET/CLR** on the turn signal lever. Upon successful reset, a chime will sound and the following symbol is indicated until the next traffic sign is detected.

In some cases, traffic sign assistant is reset automatically by the system.

Fault

The traffic sign assistant system may not operate correctly when:

- The area of the windscreen, where the front camera is located, is not clean.
- Traffic signs are completely or partially covered or difficult to discern.
- There are adverse environmental conditions, e.g. heavy rain, snow, direct sunlight or shadows. In this case **No Traffic Sign Detection due to Weather** is indicated in the Driver Information Centre.
- Traffic signs are incorrectly mounted or damaged.
- Traffic signs do not comply with the Vienna Convention on traffic signs (Wiener Übereinkommen über Straßenverkehrszeichen).

Caution

The system is intended to help the driver within a defined speed range to discern certain traffic signs. Do not ignore traffic signs which are not displayed by the system.

The system does not discern any other than the conventional traffic signs that might give or end a speed limit.

Do not let this special feature tempt you into taking risks when driving.

Always adapt speed to the road conditions.

The driver assistance systems do not relieve the driver from full responsibility for vehicle operation.

Lane departure warning

The lane departure warning system observes the lane markings between which the vehicle is driving via a front camera. The system detects lane changes and warns the driver in the event of an unintended lane change via visual and acoustic signals.

Criteria for the detection of an unintended lane change are:

- No operation of turn signals.
- No brake pedal operation.
- No active accelerator operation or speeding-up.
- No active steering.

If the driver is active, no warning will be issued.

Activation

The lane departure warning system is activated by pressing . The illuminated LED in the button indicates that the system is switched on. When control indicator in the instrument cluster illuminates green, the system is ready to operate.

The system is only operable at vehicle speeds above 56 km/h and if lane markings are available.

When the system recognises an unintended lane change, the control indicator changes to yellow and flashes. Simultaneously a chime sound is activated.

Deactivation

The system is deactivated by pressing , the LED in the button extinguishes.

At speeds below 56 km/h the system is inoperable.

Fault

The lane departure warning system may not operate properly when:

- The windscreen is not clean.
- There are adverse environmental conditions like heavy rain, snow, direct sunlight or shadows.

The system can not operate when no lane marking is detected.

Fuel

Fuel for petrol engines

Only use unleaded fuel that complies with European standard EN 228 or equivalent.

The engine is capable of running with fuel that contains up to 10% ethanol (e.g. named E10).

Use fuel with the recommended octane rating. A lower octane rating can reduce engine power and torque and slightly increases fuel consumption.

Caution

Do not use fuel or fuel additives that contain metallic compounds such as manganese-based additives. This may cause engine damage.

Caution

Use of fuel that does not comply to EN 228 or equivalent can lead to deposits or engine damage.

Caution

Use of fuel with a lower octane rating than the lowest possible rating could lead to uncontrolled combustion and engine damage.

The engine specific requirements regarding octane rating are given in the engine data overview ⇨ 262. A country specific label at the fuel filler flap can supersede the requirement.

Fuel additives outside Europe

Fuel should contain detergent additives that help prevent engine and fuel system deposits from forming. Clean fuel injectors and intake valves will allow the emission control system to work properly.

Some fuel does not contain sufficient quantities of additive to keep fuel injectors and intake valves clean.

To make up for this lack of detergency, add Fuel System Treatment PLUS to the fuel tank at every engine oil change or every 15,000 km, whichever occurs first. It is available at your workshop.

Fuels containing oxygenates such as ethers and ethanol, as well as reformulated fuel, are available in some cities. If these fuels comply with the previously described specification, then they are acceptable to use. However, E85 (85% ethanol) and other fuels containing more than 15% ethanol must be used only in FlexFuel vehicles.

Caution

Do not use fuel containing methanol. It can corrode metal parts in the fuel system and also damage plastic and rubber parts. This damage would not be covered by the vehicle warranty.

Some fuels, mainly high octane racing fuels, can contain an octane enhancing additive called methylcyclopentadienyl manganese tricarbonyl (MMT). Do not use fuels or fuel additives with MMT as they can reduce spark plug life and affect emission control system performance. The malfunction indicator light may illuminate ⇨ 88. If this occurs, seek the assistance of a workshop.

Fuel for diesel engines

Only use diesel fuel that complies with EN 590 and which has a sulphur concentration of max. 10 ppm.

Fuels with a biodiesel (compliant with EN 14214) content of max. 7% by volume may be used (e.g. named B7).

If travelling in countries outside the European Union, occasional use of Euro-Diesel fuel with a sulphur concentration below 50 ppm is possible.

Caution

Frequent usage of diesel fuel containing more than 15 ppm sulphur will cause severe engine damage.

Caution

Use of fuel that does not comply to EN 590 or similar can lead to engine powerloss, increased wear or engine damage and may affect your warranty.

Do not use marine diesel oils, heating oils, Aquazole and similar diesel-water emulsions. Diesel fuels must not be diluted with fuels for petrol engines.

Low temperature operation

At temperatures below 0° C, some diesel products with biodiesel blends may clog, freeze or gel, which may affect the fuel supply system. Starting and engine operation may not work

properly. Make sure to fill winter grade diesel fuel at ambient temperatures below 0°C.

Arctic grade diesel fuel can be used in extreme cold temperatures below -20° C. Using this fuel grade in warm or hot climates is not recommended and may cause engine stalling, poor starting or damage on the fuel injection system.

Fuel for liquid gas operation

Liquid gas is known as LPG (Liquefied Petroleum Gas) or under its French name GPL (Gaz de Pétrole Liquéfié). LPG is also known as Autogas.

LPG consists mainly of propane and butane. The octane rating is between 105 and 115, depending on the butane proportion. LPG is stored liquid at around 5 - 10 bar pressure.

The boiling point depends on the pressure and mixing ratio. At ambient pressure, it is between -42 °C (pure propane) and -0.5 °C (pure butane).

Caution

The system works at an ambient temperature of approx. -8 °C to 100 °C.

Full function of the LPG system can only be guaranteed with liquid gas which complies with the minimum requirements of DIN EN 589.

Refuelling

⚠ Danger

Before refuelling, switch off ignition and any external heaters with combustion chambers. Switch off any mobile phones.

Follow the operating and safety instructions of the filling station when refuelling.

⚠ Danger

Fuel is flammable and explosive. No smoking. No naked flames or sparks.

If you can smell fuel in your vehicle, have the cause of this remedied immediately by a workshop.

Caution

In case of misfuelling, do not switch on ignition.

Fuel filler flap is located at right rear side of the vehicle.

The fuel filler flap can only be opened if the vehicle is unlocked. Release the fuel filler flap by pushing the flap.

To open, turn the cap slowly to the left.

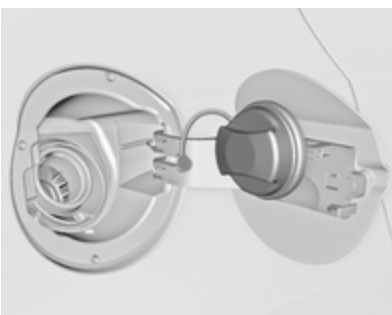

The fuel filler cap can be retained in the bracket on the fuel filler flap.

To refuel, fully insert the pump nozzle and switch it on.

After the automatic cut-off, the tank can be topped up by operating the pump nozzle a maximum of two more times.

Caution
Wipe off any overflowing fuel immediately.

To close, turn the fuel filler cap to the right until it clicks.

Close the flap and engage.

Liquid gas refuelling

Follow the operating and safety instructions of the filling station when refuelling.

The filling valve for the liquid gas is behind the fuel filler cap.

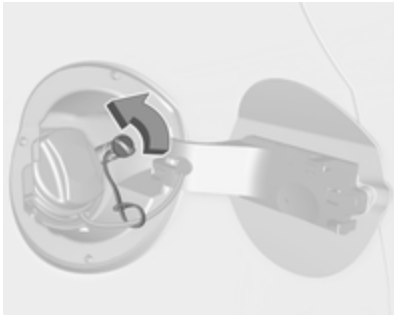

Unscrew protective cap from the filler neck.

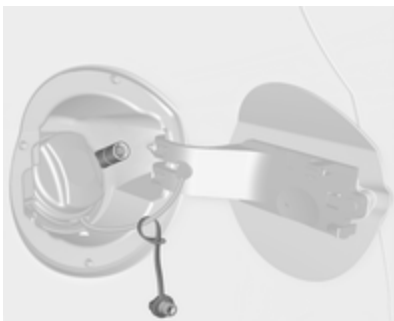

Screw the required adapter hand-tight onto the filler neck.

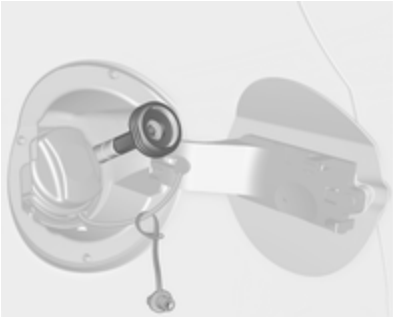

ACME Adapter: Screw the nut of the filling nozzle onto the adapter. Press locking lever on filler nozzle down.

DISH filler neck: Place the filler nozzle into the adapter. Press locking lever on filler nozzle down.

Bayonet filler neck: Place filler nozzle on the adapter and turn to the left or right through one quarter turn. Pull locking lever of filler nozzle fully.

EURO filler neck: Press the filler nozzle onto the adapter until it engages.

Press the button of the liquid gas supply point. The filling system stops or begins to run slowly when 80% of the tank volume is reached (maximum fill level).

Release button on filling system to stop the filling process. Release the locking lever and remove the filler nozzle. A small quantity of liquid gas can escape.

Remove adapter and stow in vehicle.

Fit protective cap to prevent the penetration of foreign bodies into the filler opening and the system.

⚠ Warning

Due to the system design, an escape of liquid gas after releasing the locking lever is unavoidable. Avoid inhaling.

⚠ Warning

The liquid gas tank may only be filled to 80% for safety reasons.

The multivalve on the liquid gas tank automatically limits the fill quantity. If a larger quantity is added, we recommend not exposing the vehicle to the sun until the excess amount has been used up.

Filling adapter

As filling systems are not standardised, different adapters are required which are available from Opel Distributors and from Opel Authorised Repairers.

ACME adapter: Belgium, Germany, Ireland, Luxembourg, Switzerland

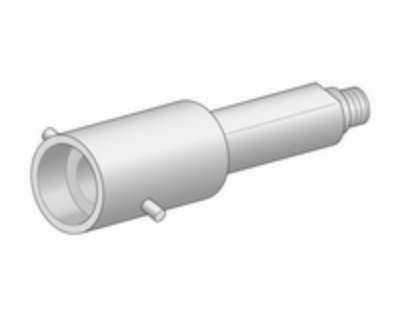

Bayonet adapter: Netherlands, Norway, Spain, United Kingdom

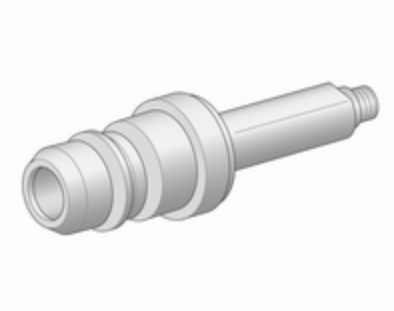

EURO adapter: Spain

DISH adapter: Bosnia-Herzegovina, Bulgaria, Denmark, Estonia, France, Greece, Italy, Croatia, Latvia, Lithuania, Macedonia, Austria, Poland, Portugal, Romania, Sweden, Switzerland, Serbia, Slovakia, Slovenia, Czech Republic, Turkey, Ukraine, Hungary

Fuel filler cap

Only use genuine fuel filler caps. Diesel-engined vehicles have special fuel filler caps.

Fuel consumption - CO_2-Emissions

The fuel consumption (combined) of the model Opel Astra is within a range of 7.8 to 3.6 l/100 km.

The CO_2 emission (combined) is within a range of 184 to 94 g/km.

For the values specific to your vehicle, refer to the EEC Certificate of Conformity provided with your vehicle or other national registration documents.

General information

The official fuel consumption and specific CO_2 emission figures quoted relate to the EU base model with standard equipment.

Fuel consumption data and CO_2 emission data are determined according to regulation R (EC) No. 715/2007 (in the latest applicable version), taking into consideration the vehicle weight in running order, as specified by the regulation.

The figures are provided only for the purpose of comparison between different vehicle variants and must not be taken as a guarantee for the actual fuel consumption of a particular vehicle. Additional equipment may result in slightly higher results than the stated consumption and CO_2 figures.

Furthermore, fuel consumption is dependent on personal driving style as well as road and traffic conditions.

Trailer hitch

General information

Only use towing equipment that has been approved for your vehicle. Entrust retrofitting of towing equipment to a workshop. It may be necessary to make changes that affect the cooling system, heat shields or other equipment.

The bulb outage detection function for trailer brake light cannot detect a partial bulb outage, e.g. in case of 4 x 5 Watt bulbs, the function only detects lamp outage when only a single 5 Watt lamp remains or none remain.

Fitting of towing equipment could cover the opening of the towing eye. If this is the case use the coupling ball bar for towing. Always keep the coupling ball bar in the vehicle.

Driving characteristics and towing tips

Before attaching a trailer, lubricate the coupling ball. However, do not do so if a stabiliser, which acts on the coupling ball, is being used to reduce snaking movements.

For trailers with low driving stability and caravan trailers with a permitted gross vehicle weight of more than 1300 kg the use of a stabiliser is strongly recommended when driving above 80 km/h.

If the trailer starts snaking, drive more slowly, do not attempt to correct the steering and brake sharply if necessary.

When driving downhill, drive in the same gear as if driving uphill and drive at a similar speed.

Adjust tyre pressure to the value specified for full load ⇨ 271.

Trailer towing

Trailer loads

The permissible trailer loads are vehicle and engine-dependent maximum values which must not be exceeded. The actual trailer load is the difference between the actual gross weight of the trailer and the actual coupling socket load with the trailer coupled.

The permissible trailer loads are specified in the vehicle documents. In general, they are valid for gradients up to max. 12%.

The permitted trailer load applies up to the specified incline and up to an altitude of 1000 metres above sea level. Since engine power decreases as altitude increases due to the air becoming thinner, therefore reducing climbing ability, the permissible gross train weight also decreases by 10% for every 1000 metres of additional altitude. The gross train weight does not have to be reduced when driving on roads with slight inclines (less than 8%, e.g. motorways).

The permissible gross train weight must not be exceeded. This weight is specified on the identification plate ⇨ 257.

Vertical coupling load

The vertical coupling load is the load exerted by the trailer on the coupling ball. It can be varied by changing the weight distribution when loading the trailer.

The maximum permissible vertical coupling load (75 kg) is specified on the towing equipment identification plate and in the vehicle documents. Always aim for the maximum load, especially in the case of heavy trailers. The vertical coupling load should never fall below 25 kg.

Rear axle load

When the trailer is coupled and the towing vehicle fully loaded, the permissible rear axle load (see identification plate or vehicle documents) may be exceeded by 60 kg, the gross vehicle weight rating may be exceeded by 60 kg. If the permissible rear axle load is exceeded, a maximum speed of 100 km/h applies.

Towing equipment

Caution
When operating without a trailer, remove the coupling ball bar.

Stowage of coupling ball bar

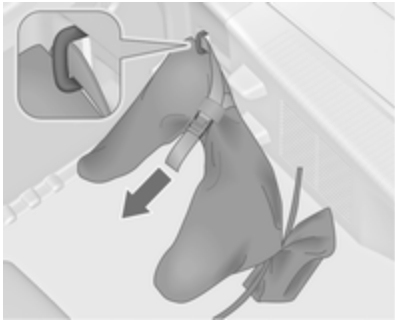

The bag with the coupling ball bar is stowed in the rear stowage compartment on the floor.

Place the strap through the lashing eye, wrap around twice and tighten the strap to secure the bag.

Fitting the coupling ball bar

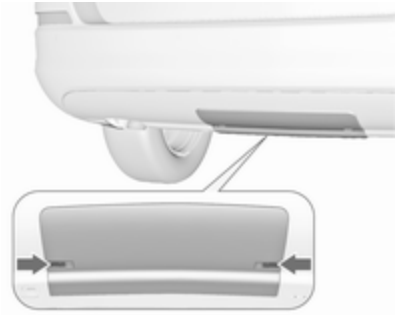

All versions except 3-door hatchback: Press fastenings inward and fold the cover downward at the front. Remove cover.

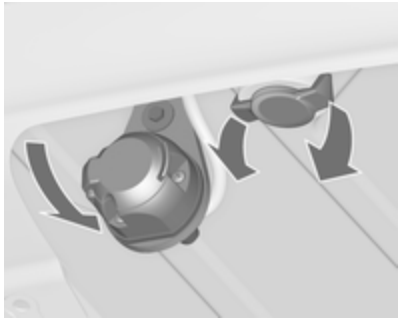

Disengage and fold down the socket. Remove the sealing plug from the opening for the coupling ball bar and stow it.

Checking the tensioning of the coupling ball bar

- Red marking on rotary knob must point towards green marking on coupling ball bar.
- The gap between the rotary knob and the coupling ball bar must be approx. 6 mm.
- The key must be in position 🔓.

Otherwise, the coupling ball bar must be tensioned before being inserted:

- Unlock coupling ball bar by turning key to position 🔓.

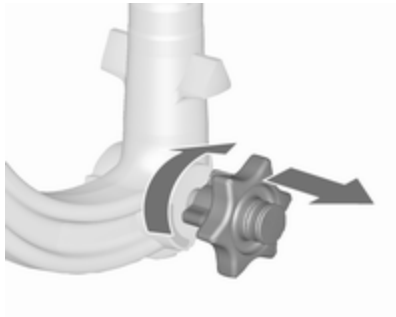

- Pull out rotary knob and turn clockwise as far as it will go.

Inserting the coupling ball bar

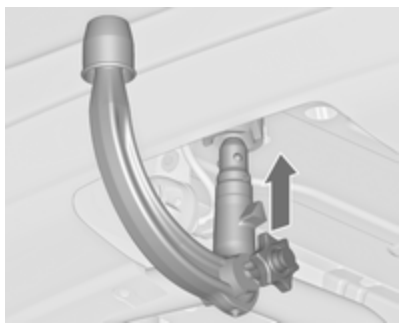

Insert the tensioned coupling ball bar in the opening and push firmly upwards until it audibly engages.

The rotary handle snaps back into its original position resting against the coupling ball bar without a gap.

⚠ Warning
Do not touch rotary handle during insertion.

Lock the coupling ball bar by turning the key to position 🔒. Remove the key and close the protective flap.

Eye for break-away stopping cable

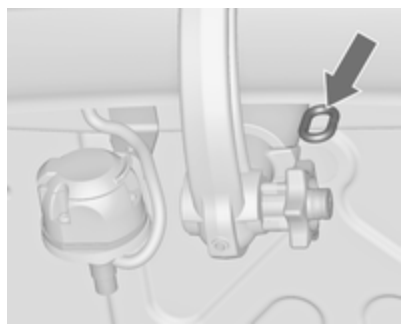

Attach breakaway stopping cable to eye.

Check that the coupling ball bar is correctly installed

- Green marking on rotary knob must point towards green marking on coupling ball bar.
- There must be no gap between the rotary handle and the coupling ball bar.
- The coupling ball bar must be firmly engaged in the opening.
- The coupling ball bar must be locked and the key removed.

⚠Warning

Towing a trailer is permitted only when a coupling ball bar is fitted correctly. If the coupling ball bar does not engage correctly, seek the assistance of a workshop.

Dismounting the coupling ball bar

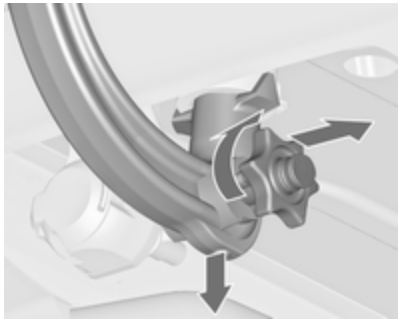

Open the protective flap and turn the key to position 🔓 to unlock the coupling ball bar.

Pull out rotary handle and turn clockwise as far as it will go. Pull out coupling ball bar downwards.

Insert sealing plug in opening. Fold away socket.

All versions except 3-door hatchback: Attach the rear side of the cover into the recess of the bumper and fold the front side upward.

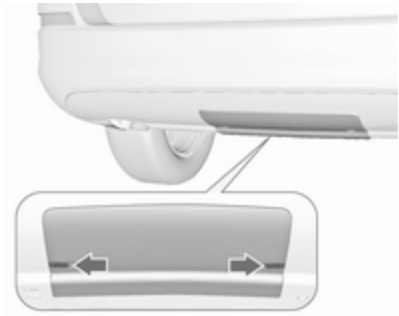

Press fastenings outward.

Trailer stability assist

If the system detects snaking movements, engine power is reduced and the vehicle/trailer combination is selectively braked until the snaking ceases. While system is working keep steering wheel as still as possible.

Trailer stability assist (TSA) is a function of the Electronic Stability Control ⇨ 155.

Vehicle care

General Information **200**
Accessories and vehicle modifications 200
Vehicle storage 200
End-of-life vehicle recovery 201
Vehicle checks **201**
Performing work 201
Bonnet 201
Engine oil 202
Engine coolant 203
Power steering fluid 204
Washer fluid 204
Brakes 205
Brake fluid 205
Vehicle battery 205
Diesel fuel system bleeding 207
Wiper blade replacement 207
Bulb replacement **208**
Halogen headlights 208
Adaptive forward lighting 211
Fog lights 212
Front turn signal lights 214
Tail lights 216
Side turn signal lights 219
Number plate light 221
Interior lights 221
Instrument panel illumination ... 221
Electrical system **222**
Fuses 222
Engine compartment fuse box . 223
Instrument panel fuse box 225
Load compartment fuse box 226
Vehicle tools **227**
Tools 227
Wheels and tyres **229**
Winter tyres 229
Tyre designations 229
Tyre pressure 229
Tyre pressure monitoring system 231
Tread depth 234
Changing tyre and wheel size . 234
Wheel covers 235
Tyre chains 235
Tyre repair kit 235
Wheel changing 238
Spare wheel 242
Jump starting **246**
Towing **247**
Towing the vehicle 247
Towing another vehicle 248
Appearance care **249**
Exterior care 249
Interior care 252

General Information

Accessories and vehicle modifications

We recommend the use of genuine parts and accessories and factory approved parts specific for your vehicle type. We cannot assess or guarantee reliability of other products - even if they have a regulatory or otherwise granted approval.

Any modification, conversion or other changes made to standard vehicle specifications (including, without limitation, software modifications, modifications of the electronic control units) may invalidate the warranty offered by Opel. Furthermore, such changes may affect driver assistance systems, may impact fuel consumption, CO_2 emissions and other emissions of the vehicle and cause the vehicle to no longer conform to the operating permit, impacting the validity of your vehicle registration.

Caution

When transporting the vehicle on a train or on a recovery vehicle, the mud flaps might be damaged.

Vehicle storage

Storage for a long period of time

If the vehicle is to be stored for several months:

- Wash and wax the vehicle.
- Have the wax in the engine compartment and underbody checked.
- Clean and preserve the rubber seals.
- Fill up fuel tank completely.
- Change the engine oil.
- Drain the washer fluid reservoir.
- Check the coolant antifreeze and corrosion protection.
- Adjust tyre pressure to the value specified for full load.
- Park the vehicle in a dry, well ventilated place. Engage first or reverse gear or set selector lever to **P**. Prevent the vehicle from rolling.
- Do not apply the parking brake.
- Open the bonnet, close all doors and lock the vehicle.
- Disconnect the clamp from the negative terminal of the vehicle battery. Beware that all systems are not functional, e.g. anti-theft alarm system.

Putting back into operation

When the vehicle is to be put back into operation:

- Connect the clamp to the negative terminal of the vehicle battery. Activate the electronics of the power windows.
- Check tyre pressure.
- Fill up the washer fluid reservoir.
- Check the engine oil level.
- Check the coolant level.
- Fit the number plate if necessary.

End-of-life vehicle recovery

Information on end-of-life vehicle recovery centres and the recycling of end-of-life vehicles is available on our website, where legally required. Only entrust this work to an authorised recycling centre.

Gas vehicles must be recycled by a service centre authorised for gas vehicles.

Vehicle checks

Performing work

⚠ Warning

Only perform engine compartment checks when the ignition is off.

The cooling fan may start operating even if the ignition is off.

⚠ Danger

The ignition system and Xenon headlights use extremely high voltage. Do not touch.

Bonnet

Opening

Pull the release lever and return it to its original position.

Move the safety catch sideways to the left vehicle side and open the bonnet.

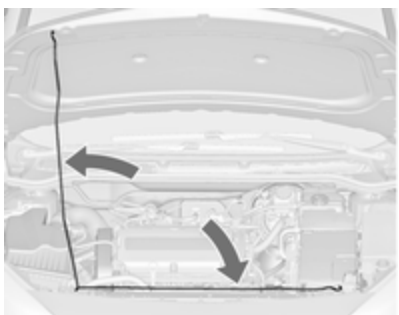

Secure the bonnet support.

If the bonnet is opened during an Autostop, the engine will be restarted automatically for safety reasons.

Closing

Before closing the bonnet, press the support into the holder.

Lower the bonnet and allow it to fall into the latch from a low height (20-25 cm). Check that the bonnet is engaged.

Caution
Do not press the bonnet into the latch, to avoid dents.

Engine oil

Check the engine oil level manually on a regular basis to prevent damage to the engine. Ensure that the correct specification of oil is used. Recommended fluids and lubricants ⇨ 254.

The maximum engine oil consumption is 0.6 l per 1000 km.

Check with the vehicle on a level surface. The engine must be at operating temperature and switched off for at least five minutes.

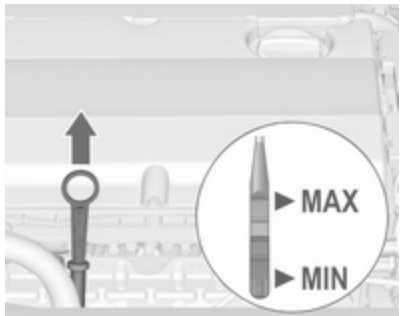

Pull out the dipstick, wipe it clean, reinsert it fully, pull out and read the engine oil level.

Different dipsticks are used depending on engine variant.

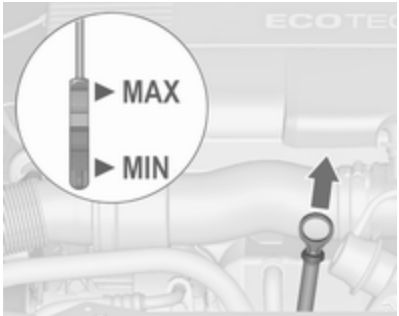

When the engine oil level has dropped to the **MIN** mark, top up engine oil.

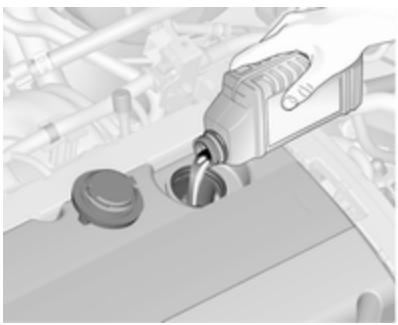

We recommend the use of the same grade of engine oil that was used at last change.

The engine oil level must not exceed the **MAX** mark on the dipstick.

Caution
Overfilled engine oil must be drained or suctioned out.

Capacities ⇨ 270.

Fit the cap on straight and tighten it.

Engine coolant

The coolant provides freeze protection down to approx. -28 °C. In cold regions with very low temperatures, the factory filled coolant provides frost protection down to approx. -37 °C.

Caution
Only use approved antifreeze.

Coolant and antifreeze ⇨ 254.

Coolant level

Caution
Too low a coolant level can cause engine damage.

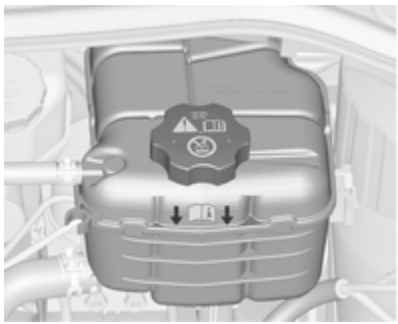

If the cooling system is cold, the coolant level should be above the filling line mark. Top up if the level is low.

⚠Warning

Allow the engine to cool before opening the cap. Carefully open the cap, relieving the pressure slowly.

To top up, use a 1:1 mixture of approved coolant concentrate mixed with clean tap water. If no coolant concentrate is available, use clean tap water. Install the cap tightly. Have the coolant concentration checked and have the cause of the coolant loss remedied by a workshop.

Power steering fluid

Caution

Extremely small amounts of contamination can cause steering system damage and cause it to not work properly. Do not allow contaminates to contact the fluid side of the reservoir cap/dipstick or from entering the reservoir.

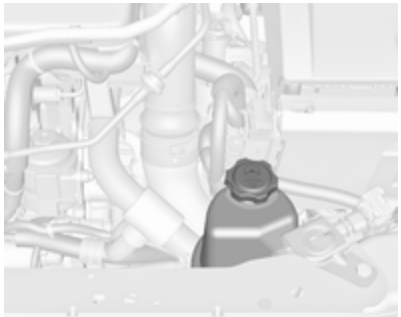

Power steering fluid level normally does not have to be checked. If an unusual noise sounds during steering or the power steering reacts unusually, seek the assistance of a workshop.

Washer fluid

Fill with clean water mixed with a suitable quantity of approved windscreen washer fluid which contains antifreeze.

Caution

Only washer fluid with a sufficient antifreeze concentration provides protection at low temperatures or after a sudden drop in temperature.

Use of washer fluid containing isopropanol can damage exterior lamps.

Washer fluid ⇨ 254.

Brakes

In the event of minimum thickness of the brake lining, a squealing noise sounds during braking.

Continued driving is possible but have the brake lining replaced as soon as possible.

Once new brake linings are installed, do not brake unnecessarily hard for the first few journeys.

Brake fluid

⚠Warning

Brake fluid is poisonous and corrosive. Avoid contact with eyes, skin, fabrics and painted surfaces.

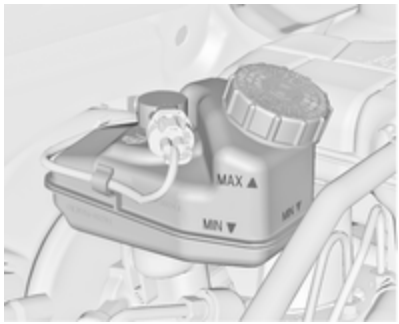

The brake fluid level must be between the **MIN** and **MAX** marks.

If fluid level is below **MIN** seek the assistance of a workshop.

Brake and clutch fluid ⇨ 254.

Vehicle battery

The vehicle battery is maintenance-free provided that the driving profile allows sufficient charging of the battery. Short-distance-driving and frequent engine starts can discharge the battery. Avoid the use of unnecessary electrical consumers.

Batteries do not belong in household waste. They must be disposed of at an appropriate recycling collection point.

Laying up the vehicle for more than four weeks can lead to battery discharge. Disconnect the clamp from the negative terminal of the vehicle battery.

Ensure the ignition is switched off before connecting or disconnecting the vehicle battery.

Vehicle battery discharge protection ⇨ 128.

Disconnecting the battery

If the vehicle's battery is to be disconnected (e.g. for maintenance work), the alarm siren must be deactivated as follows: Switch the ignition on then off, then disconnect the vehicle's battery within 15 seconds.

Replacing the vehicle battery

Note
Any deviation from the instructions given in this section may lead to temporary deactivation or disturbance of the stop-start system.

When the vehicle battery is being replaced, please ensure that there are no open ventilation holes in the vicinity of the positive terminal. If a ventilation hole is open in this area, it must be closed off with a dummy cap, and the ventilation in the vicinity of the negative terminal must be opened.

Only use vehicle batteries that allow the fuse box to be mounted above the vehicle battery.

Ensure that the battery is always replaced by the same type of battery.

We recommend that you have the vehicle battery replaced by a workshop.

Stop-start system ⇨ 142.

Charging the vehicle battery

⚠ Warning

On vehicles with stop-start system, ensure that the charging potential does not exceed 14.6 volts when using a battery charger. Otherwise the vehicle battery might be damaged.

Jump starting ⇨ 246.

Warning label

Meaning of symbols:

- No sparks, naked flames or smoking.
- Always shield eyes. Explosive gases can cause blindness or injury.
- Keep the vehicle battery out of reach of children.
- The vehicle battery contains sulphuric acid which could cause blindness or serious burn injuries.

- See the Owner's Manual for further information.
- Explosive gas may be present in the vicinity of the vehicle battery.

Diesel fuel system bleeding

If the tank has been run dry, the diesel fuel system must be bled. Switch on the ignition three times for 15 seconds at a time. Then crank the engine for a maximum of 40 seconds. Repeat this process after no less than five seconds. If the engine fails to start, seek the assistance of a workshop.

Wiper blade replacement

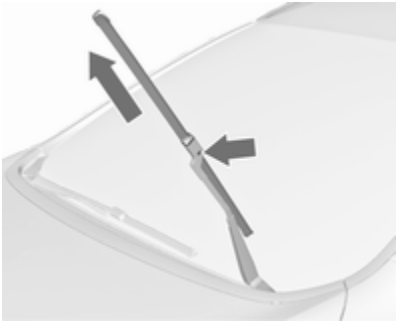

Lift the wiper arm until it stays in the raised position, press button to disengage the wiper blade and remove.

Attach the wiper blade slightly angled to the wiper arm and push until it engages.

Lower wiper arm carefully.

Wiper blade on the rear window

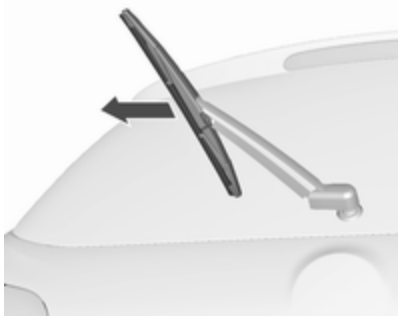

Lift wiper arm. Disengage wiper blade as shown in illustration and remove.

Attach the wiper blade slightly angled to the wiper arm and push until it engages.

Lower wiper arm carefully.

Bulb replacement

Switch off the ignition and switch off the relevant switch or close the doors.

Only hold a new bulb at the base. Do not touch the bulb glass with bare hands.

Use only the same bulb type for replacement.

Replace headlight bulbs from within the engine compartment.

Bulb check

After a bulb replacement switch on the ignition, operate and check the lights.

Halogen headlights

4-door notchback

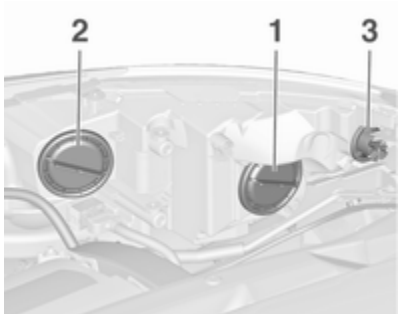

Halogen headlights with separate bulbs for low beam and high beam.

Low beam (1) outer bulb.

High beam (2) inner bulb.

Sidelight/Daytime running light (3).

Low beam (1)

1. Rotate the cap (1) anticlockwise and remove it.

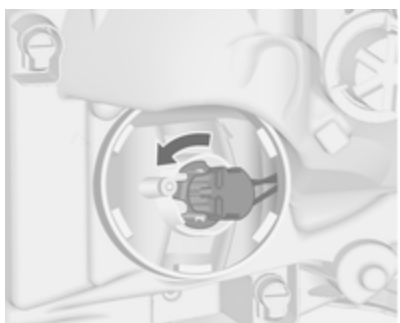

2. Rotate the bulb holder anticlockwise to disengage. Withdraw the bulb holder from the reflector.

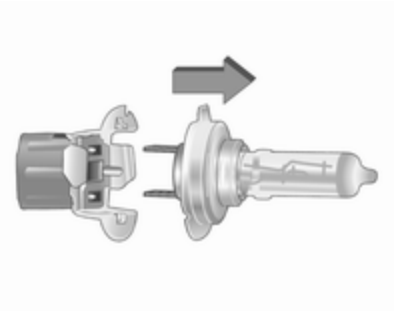

3. Detach the bulb from the bulb holder and replace the bulb.
4. Insert the bulb holder, engaging the two lugs into the reflector and rotate clockwise to secure.
5. Fit the cap and rotate clockwise.

High beam (2)

1. Rotate the cap (2) anticlockwise and remove it.
2. Rotate the bulb holder anticlockwise to disengage. Withdraw the bulb holder from the reflector.
3. Detach the bulb from the bulb holder and replace the bulb.
4. Insert the bulb holder, engaging the two lugs into the reflector and rotate clockwise to secure.
5. Fit the cap and rotate clockwise.

Sidelights/Daytime running light (3)

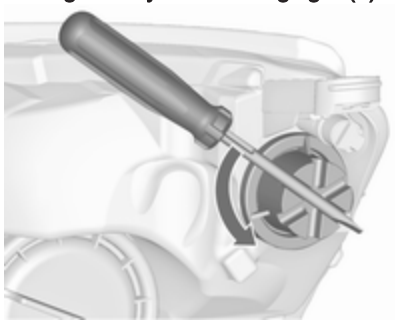

1. Rotate the cap (3) anticlockwise and remove it. Use the screwdriver to rotate the cap.

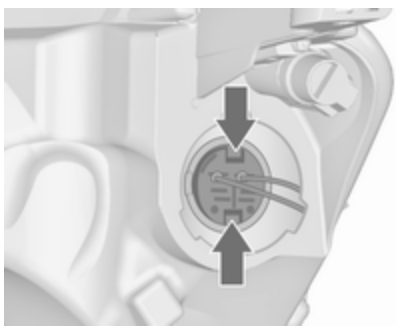

2. Press latches together and withdraw the bulb holder from the reflector.

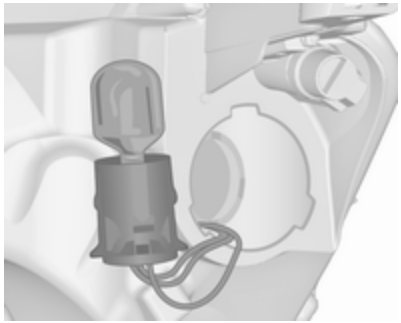

3. Remove the bulb from the socket and replace the bulb.
4. Insert the bulb holder into the reflector. Fit the cap and rotate clockwise.

3-door hatchback

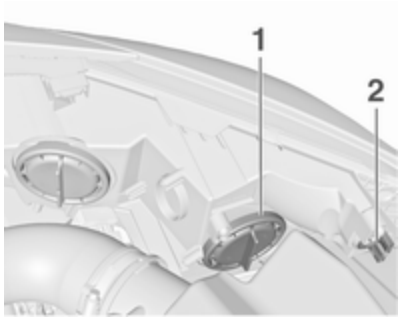

Bi-Halogen Headlight (1) with one bulb for low and high beam.

Sidelight/Daytime running light (2).

Low/High beam (1)

1. Rotate the cap (1) anticlockwise and remove it.

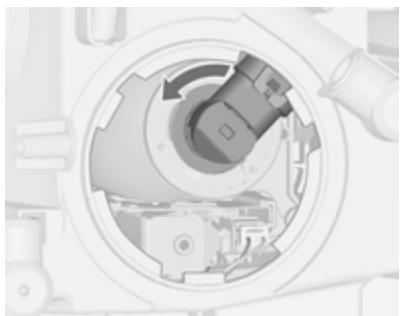

2. Rotate the bulb holder anticlockwise to disengage. Withdraw the bulb holder from the reflector.

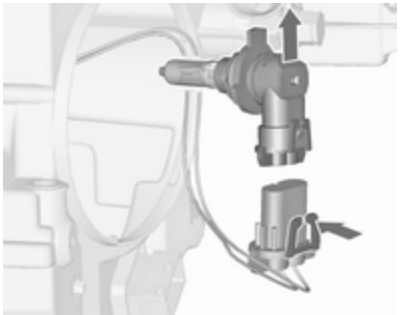

3. Disengage the bulb holder from the plug connector by pressing the retaining lug.
4. Replace the bulb and connect bulb holder with the plug connector.
5. Insert the bulb holder, engaging the two lugs into the reflector and rotate clockwise to secure.
6. Fit the cap and rotate clockwise.

Sidelight/Daytime running light (2)

1. Rotate bulb socket (2) anticlockwise to disengage. Withdraw the bulb socket from the reflector.

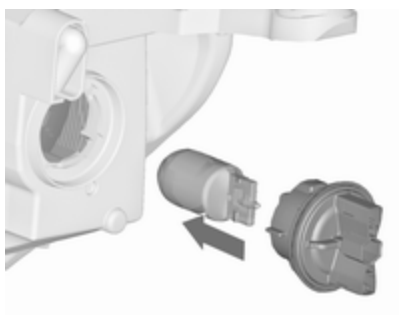

2. Remove the bulb from the socket by pulling.
3. Replace and insert new bulb into socket.
4. Insert the bulb socket into the reflector and turn clockwise.

Adaptive forward lighting

⚠ Danger

Adaptive forward lighting system uses Xenon headlights.

Xenon headlights work under extremely high electrical voltage. Do not touch. Have bulbs replaced by a workshop.

Sidelight/Daytime running lights are designed as Light Emitting Diodes (LEDs) and cannot be changed.

Bulbs for corner lighting can be changed.

Corner lighting

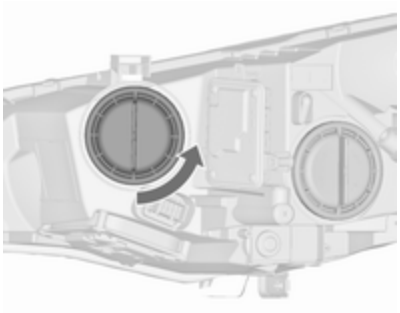

1. Rotate the cap anticlockwise and remove it.

2. Rotate the bulb holder anticlockwise to disengage. Withdraw the bulb holder from the reflector.

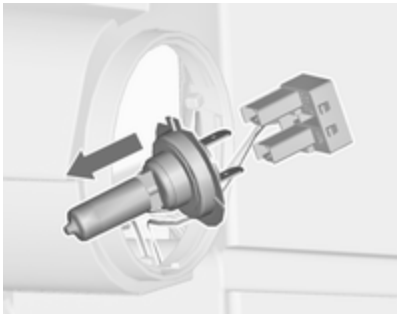

3. Disengage the bulb from the plug connector by pulling.
4. Replace the bulb and connect bulb holder with the plug connector.
5. Insert the bulb holder, engaging the two lugs into the reflector and rotate clockwise to secure.
6. Fit the cap and rotate clockwise.

Fog lights

3-door hatchback

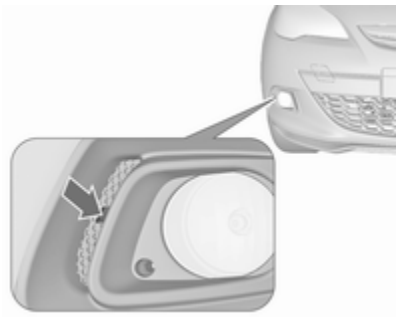

1. Disengage the cover with a screwdriver in the recess and remove the cover.

2. Unscrew both screws and remove light assembly from the bumper.

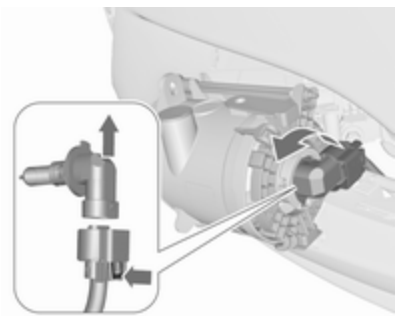

3. Turn the bulb socket anticlockwise and remove it from the reflector housing.
4. Disengage the bulb socket from the plug connector by pressing the retaining lug.
5. Remove and replace the bulb socket with bulb and attach the plug connector.
6. Insert the bulb socket into the reflector housing by turning clockwise and engage.
7. Mount the light assembly by tightening both screws.
8. Assemble and engage the cover.

4-door notchback

1. Release both caps with a screwdriver at the marked area.

2. Unscrew both screws and remove turn light assembly from the bumper.

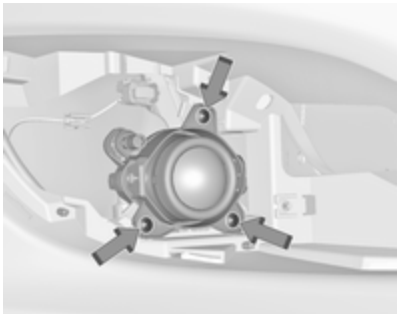

3. Unscrew three screws and remove fog light assembly from the bumper.

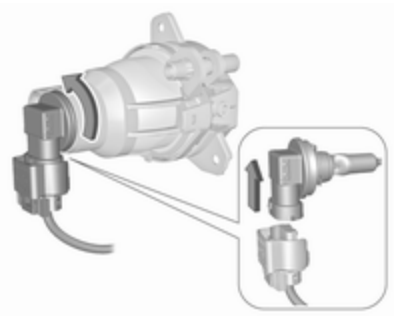

4. Turn the bulb socket anticlockwise and remove it from the reflector housing.
5. Disengage the bulb socket from the plug connector by pressing the retaining lug.
6. Replace and insert bulb socket into the reflector housing, turn bulb socket clockwise and attach the plug connector.
7. Attach fog light assembly into the bumper and fix with three screws.
8. Attach turn light assembly into the bumper and fix with two screws.
9. Engage both caps.

Front turn signal lights

3-door hatchback

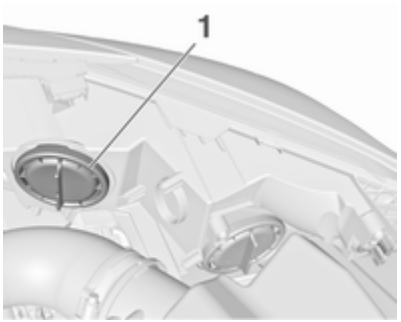

1. Rotate cap (1) anticlockwise and remove it.

2. Rotate bulb socket anticlockwise to disengage and withdraw from the reflector housing.

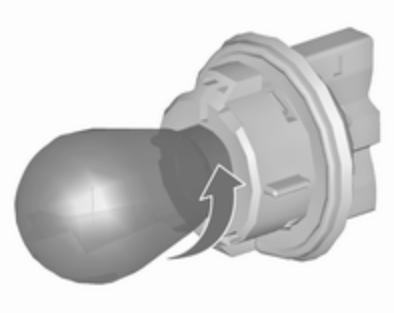

3. Remove the bulb from the socket by turning anticlockwise.
4. Replace and insert new bulb into socket by turning clockwise.
5. Insert the bulb socket into the reflector housing and turn clockwise.
6. Fit the cap and rotate clockwise.

4-door notchback

1. Release both caps with a screwdriver at the marked area.

2. Unscrew both screws and remove light assembly from the bumper.

3. Disengage the bulb socket from the reflector housing by pressing both retaining lugs.

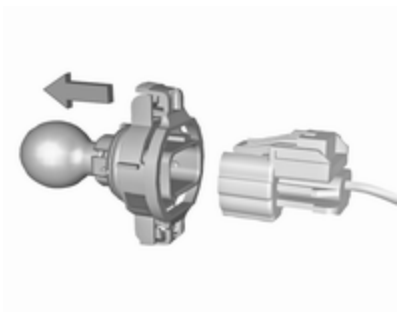

4. Disengage the plug connector from the bulb socket by pressing the retaining lug.
5. Remove and replace the bulb socket with bulb.
6. Insert the bulb socket into the reflector housing and attach the plug connector.
7. Attach light assembly into the bumper and fix with both screws.
8. Engage both caps.

4-door notchback with Sport/GSi front bumper

The bulbs are accessible from beneath the vehicle.

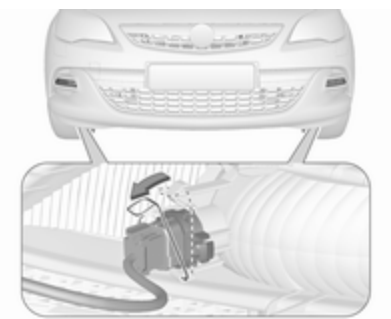

1. Disengage the spring clip and then swivel it backwards.
2. Pull the bulb socket with bulb out of the reflector housing.

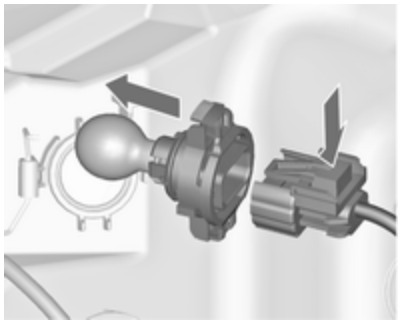

3. Disengage the bulb socket from the plug connector by pressing the retaining lug.
4. Remove and replace the bulb socket with bulb.
5. Attach the plug connector.
6. Insert the bulb socket into the reflector housing.
7. Swivel the spring clip forwards and engage.

Tail lights

3-door hatchback

1. Release the cover on the respective side and remove it.

2. Unscrew both plastic securing nuts from the inside by hand.

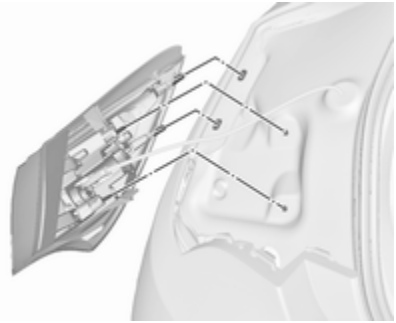

3. Carefully withdraw the light assembly from the recesses and remove.
4. Detach wiring plug from bulb carrier.

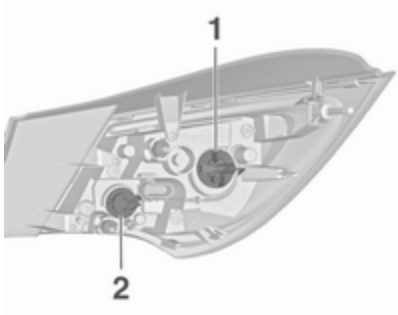

5. Remove the bulb holder by turning and replace the bulb by withdrawing or pushing the bulb slightly into the socket and rotating anticlockwise:

   Tail light/Brake light (**1**)

   Turn signal light (**2**)

   Version with Light Emitting Diode (LED)

   Only turn signal light (**2**) can be changed.
6. Insert and turn bulb holder clockwise into the tail light assembly. Connect the wiring plug with the light assembly. Fit light assembly with the retaining pins into the recesses of the vehicle body and tighten the plastic securing nuts from the inside of the load compartment. Close cover and engage.

Light assembly in the tailgate

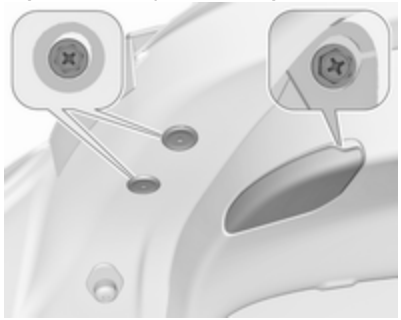

1. Open the tailgate and remove the covers on the respective side.
2. Unscrew three screws.
3. Remove the tail light assembly from tailgate.
4. Remove the bulb holder by turning and replace the bulb by withdrawing or pushing the bulb slightly into the socket and rotating anticlockwise:

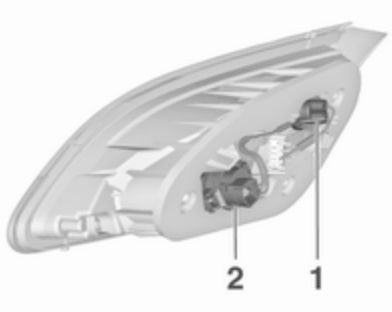

Tail light (**1**)

Rear fog light/Reverse light (**2**), depending on the side.

Version with Light Emitting Diode (LED)

Only rear fog light respectively reverse light (**2**), depending on the side of the vehicle, can be changed.

5. Insert and turn bulb holder clockwise into the tail light assembly. Fit the tail light assembly in the tailgate and tighten the screws. Attach all covers.

4-door notchback

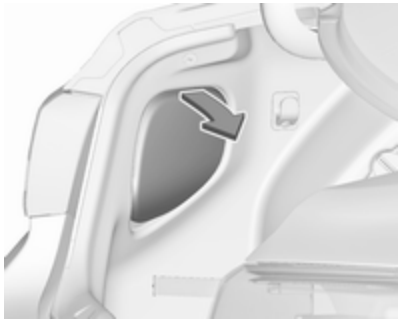

1. Remove cover on the responding side.

2. Unscrew two plastic securing nuts from the inside by hand.

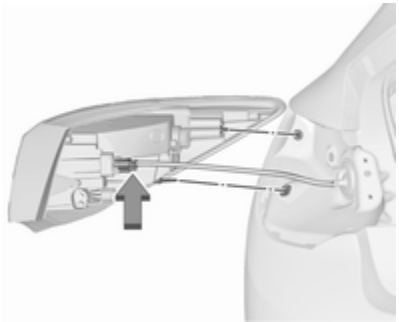

3. Carefully withdraw tail light assembly from recesses and remove. Make sure that the cable duct remains in position.
4. Detach wiring plug from bulb carrier.

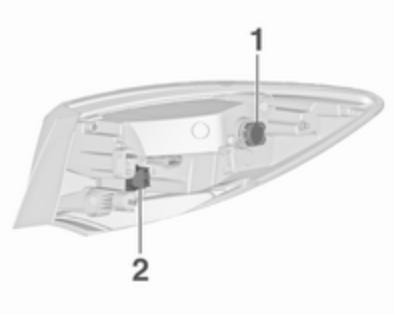

5. Remove the bulb holder by turning and replace the bulb by withdrawing or pushing the bulb slightly into the socket and rotating anticlockwise:

   Tail light/Brake light (**1**)

   Turn signal light (**2**)
6. Insert bulb holder and turn clockwise. Connect the wiring plug. Fit light assembly with the retaining pins into the recesses of the vehicle body and tighten the plastic securing nuts from the inside of the load compartment. Attach cover.

Light assembly in the tailgate

1. Open the tailgate and remove the cover on the respective side.

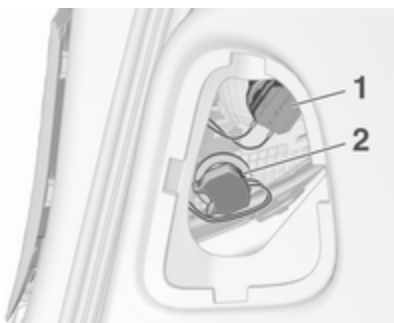

2. Remove the bulb holder by turning and replace the bulb by withdrawing or pushing the bulb slightly into the socket and rotating anticlockwise:

   Tail light (**1**)

   Rear fog light/Reverse light (**2**), depending on the side of the vehicle.
3. Insert bulb holder and turn clockwise. Attach cover.

Side turn signal lights

3-door hatchback

To replace bulb, remove lamp housing:

1. Slide lamp to its left side and remove at its right end.

2. Turn bulb holder anticlockwise and remove from housing.

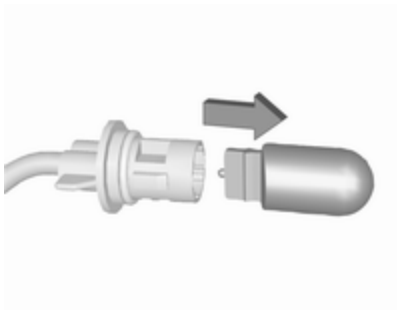

3. Pull bulb from bulb holder and replace it.
4. Insert bulb holder and turn clockwise.
5. Insert left end of the lamp, slide to the left and insert right end.

4-door notchback

To replace bulb, remove lamp housing:

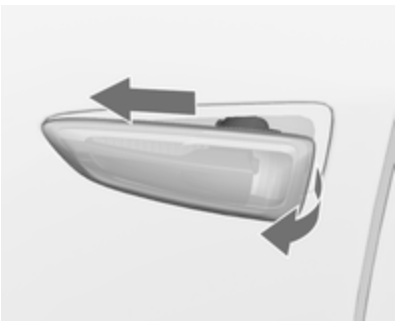

1. Slide lamp to its left side and remove at its right end.

2. Turn bulb holder anticlockwise and remove from housing.

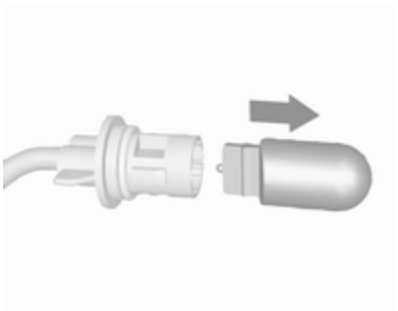

3. Pull bulb from bulb holder and replace it.

4. Insert bulb holder and turn clockwise.
5. Insert left end of the lamp, slide to the left and insert right end.

Number plate light

1. Insert screwdriver in recess of the cover, press to the side and release spring.

2. Remove lamp downwards, taking care not to pull on the cable.

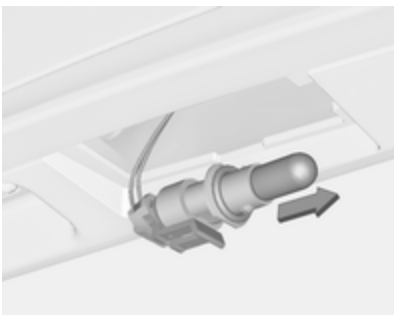

3. Remove bulb holder from lamp housing by turning anticlockwise.
4. Pull bulb from bulb holder and replace it.
5. Insert bulb holder into lamp housing and turn clockwise.
6. Insert lamp into bumper and let engage.

Interior lights

Courtesy light, reading lights

Have bulbs replaced by a workshop.

Load compartment light

Have bulbs replaced by a workshop.

Instrument panel illumination

Have bulbs replaced by a workshop.

Electrical system

Fuses

Data on the replacement fuse must match the data on the defective fuse.

There are three fuse boxes in the vehicle:

- in the front left of the engine compartment
- in left-hand drive vehicles, in the interior behind the storage compartment, or, in right-hand drive vehicles, behind the glovebox
- behind a cover on the left side of the load compartment

Before replacing a fuse, turn off the respective switch and the ignition.

A blown fuse can be recognised by its melted wire. Do not replace the fuse until the cause of the fault has been remedied.

Some functions are protected by several fuses.

Fuses may also be inserted without existence of a function.

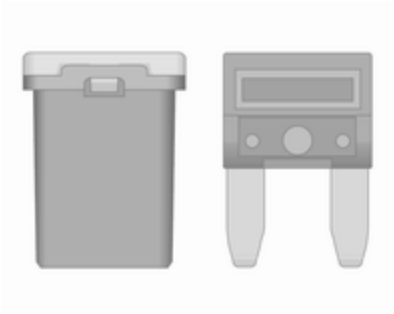

Fuse extractor

A fuse extractor may be located in the fuse box in the engine compartment.

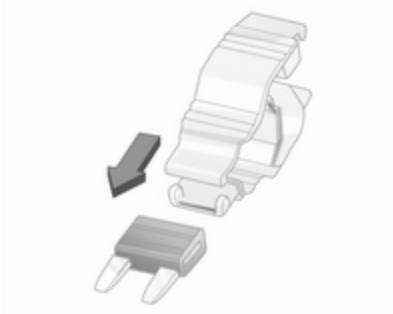

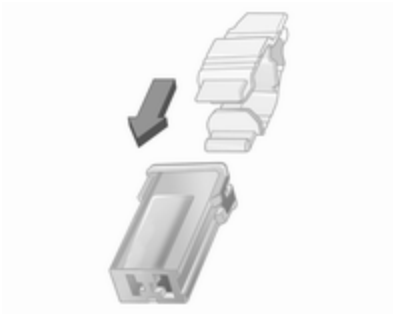

Place the fuse extractor on the various types of fuse from the top or side, and withdraw fuse.

Engine compartment fuse box

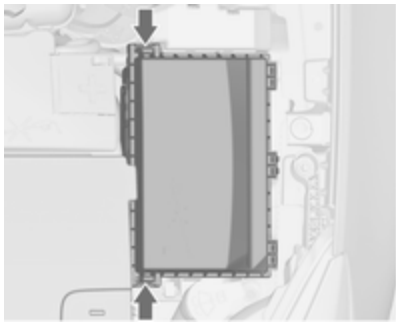

The fuse box is in the front left of the engine compartment.

Disengage the cover and fold it upwards until it stops. Remove the cover vertically upwards.

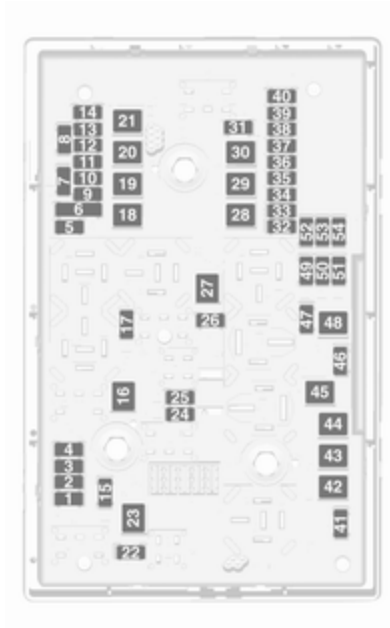

No.	Circuit
1	Engine control module
2	Lambda sensor
3	Fuel injection/Ignition system
4	Fuel injection/Ignition system
5	–
6	Mirror heating/Anti-theft alarm system
7	Fan control/Engine control module/Transmission control module
8	Lambda sensor/Engine cooling
9	Rear window sensor
10	Vehicle battery sensor
11	Trunk release
12	Adaptive forward lighting/Automatic light control
13	ABS
14	Rear window wiper
15	Engine control module

No.	Circuit
16	Starter
17	Transmission control module
18	Heated rear window
19	Front power windows
20	Rear power windows
21	Rear electrical centre
22	Left high beam (Halogen)
23	Headlamp washer system
24	Right low beam (Xenon)
25	Left low beam (Xenon)
26	Front fog lights
27	Diesel fuel heating
28	Start stop system
29	Electric parking brake
30	ABS
31	Adaptive cruise control
32	Airbag
33	Adaptive forward lighting/Automatic light control
34	Exhaust gas recirculation
35	Exterior mirror/Rain sensor
36	Climate control
37	Canister vent solenoid
38	Vacuum pump
39	Central control module
40	Windscreen washer/Rear window washer system
41	Right high beam (Halogen)
42	Radiator fan
43	Windscreen wiper
44	Windscreen wiper
45	Radiator fan
46	–
47	Horn
48	Radiator fan
49	Fuel pump
50	Headlamp levelling/Adaptive forward lighting
51	Air shutter
52	Auxiliary heater/Diesel engine
53	Transmission control module/Engine control module
54	Vacuum pump/Instrument panel cluster/Heating ventilation/Air conditioning system

After having changed defective fuses, close the fuse box cover and press until it engages.

If the fuse box cover is not closed correctly, malfunction may occur.

Instrument panel fuse box

In left-hand drive vehicles, the fuse box is behind the storage compartment in the instrument panel.

Open the compartment and push it to the left to unlock. Fold the compartment down and remove it.

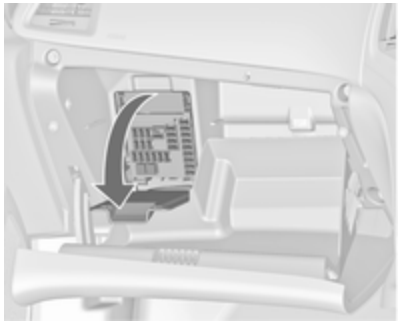

In right-hand drive vehicles, the fuse box is located behind a cover in the glovebox. Open the glovebox, then open the cover and fold it down.

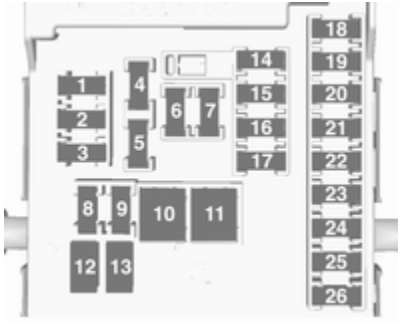

No.	Circuit
1	Displays
2	Exterior lights/Body control module
3	Exterior lights/Body control module
4	Infotainment system
5	Infotainment system/Instrument
6	Power outlet/Cigarette lighter
7	Power outlet
8	Left low beam/Body control module
9	Right low beam/Body control module/Airbag module
10	Door locks/Body control module
11	Interior fan
12	–
13	–
14	Diagnostic connector
15	Airbag

No.	Circuit
16	Power outlet
17	Air conditioning system
18	Logistics
19	Body control module
20	Body control module
21	Instrument panel cluster/Anti-theft alarm system
22	Ignition sensor
23	Body control module
24	Body control module
25	–
26	–

Load compartment fuse box

3-door hatchback

The fuse box is on the left side of the load compartment behind a cover.

Remove the cover.

Fuse assignments

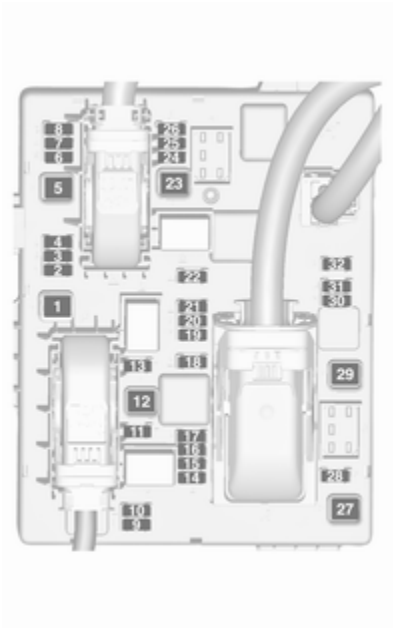

No.	Circuit
1	–
2	Trailer outlet
3	Parking assist
4	–
5	–
6	–
7	Power seat
8	–
9	–
10	–
11	Trailer module/Trailer socket
12	Trailer module
13	Trailer outlet
14	Rear seat/Electrical folding
15	–
16	Interior mirror
17	Power outlet

No.	Circuit
18	–
19	Steering wheel heating
20	Sunroof
21	Heated front seats
22	–
23	–
24	–
25	–
26	Deactivated logistic mode
27	–
28	–
29	–
30	–
31	Amplifier/Subwoofer
32	Active damping system/Lane departure warning

Vehicle tools

Tools

Vehicles without spare wheel

Some tools and the towing eye are located in a tool box in the load compartment below the floor cover.

Vehicles with spare wheel

Variant 1a: 3-door hatchback with rigid wheel wrench

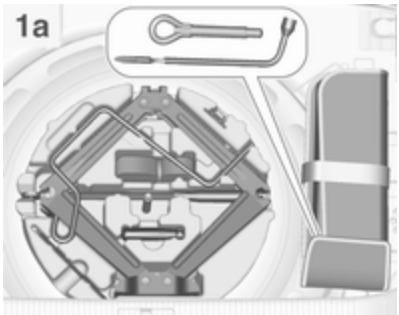

The jack, the tools and a strap for securing a damaged wheel are in the tool box below the spare wheel in the load compartment. The wheel wrench and the towing eye are in the tool bag located in the spare wheel well near the tool box. Spare wheel ⇨ 242.

Variant 1b: 3-door hatchback with foldable wheel wrench

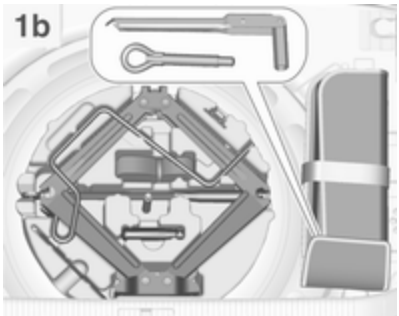

Same content as variant **1a**, but with a foldable wheel wrench instead of the rigid wheel wrench located in the tool bag.

Variant 2: 4-door notchback

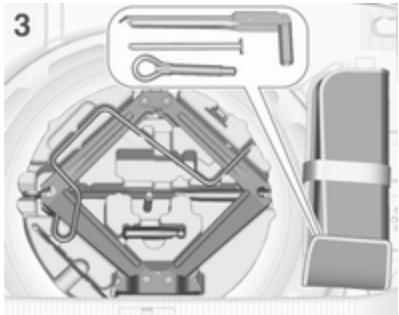

The jack and the tools are in the tool box below the spare wheel in the load compartment. The wheel wrench, the towing eye and an extension bolt for securing a damaged wheel (only vehicles with temporary spare wheel) are in the tool bag located in the spare wheel well near the tool box. Spare wheel ⇨ 242.

Wheels and tyres

Tyre condition, wheel condition

Drive over edges slowly and at right angles if possible. Driving over sharp edges can cause tyre and wheel damage. Do not trap tyres on the kerb when parking.

Regularly check the wheels for damage. Seek the assistance of a workshop in the event of damage or unusual wear.

Winter tyres

Winter tyres improve driving safety at temperatures below 7 °C and should therefore be fitted on all wheels.

In accordance with country-specific regulations, affix the speed sticker in the driver's field of view.

4-door notchback
Tyre size 205/65 R16 is only suitable as a winter tyre.

All engines except A14XER, B14XER, B14NEL, B14NET, B14NET LPG, B16XER:

Tyre size 215/50 R17 is only suitable as a winter tyre.

Tyre designations

E.g. **215/60 R 16 95 H**

215 : tyre width, mm
60 : cross-section ratio (tyre height to tyre width), %
R : belt type: Radial
RF : type: RunFlat
16 : wheel diameter, inches
95 : load index e.g. 95 is equivalent to 690 kg
H : speed code letter

Speed code letter:

Q : up to 160 km/h
S : up to 180 km/h
T : up to 190 km/h
H : up to 210 km/h
V : up to 240 km/h
W : up to 270 km/h

Choose a tyre appropriate for the maximum speed of your vehicle.

The maximum speed is achievable at kerb weight with driver (75 kg) plus 125 kg payload. Optional equipment could reduce the maximum speed of the vehicle.

Performance ⇨ 265.

Directional tyres

Fit directional tyres such that they roll in the direction of travel. The rolling direction is indicated by a symbol (e.g. an arrow) on the sidewall.

Tyre pressure

Check the pressure of cold tyres at least every 14 days and before any long journey. Do not forget the spare wheel. This also applies to vehicles with tyre pressure monitoring system.

Tyre pressure ⇨ 271.

The tyre pressure information label on the front left or right door frame indicates the original equipment tyres and the correspondent tyre pressures.

The tyre pressure data refers to cold tyres. It applies to summer and winter tyres.

Always inflate the spare tyre to the pressure specified for full load.

The ECO tyre pressure serves to achieve the smallest amount of fuel consumption possible.

Incorrect tyre pressures will impair safety, vehicle handling, comfort and fuel economy and will increase tyre wear.

Tyre pressures differ depending on various options. For the correct tyre pressure value, follow the procedure below:

1. Identify the body style.
2. Identify the engine identifier code. Engine data ⇨ 262.
3. Identify the respective tyre.

The tyre pressure tables show all possible tyre combinations ⇨ 271.

For the tyres approved for your vehicle, refer to the EEC Certificate of Conformity provided with your vehicle or other national registration documents.

The driver is responsible for correct adjustment of tyre pressure.

⚠ Warning

If the pressure is too low, this can result in considerable tyre warm-up and internal damage, leading to tread separation and even to tyre blow-out at high speeds.

⚠ Warning

For specific tyres the recommended tyre pressure as shown in the tyre pressure table may exceed the maximum tyre pressure as indicated on the tyre. Never exceed the maximum tyre pressure as indicated on the tyre.

If the tyre pressure must be reduced or increased on a vehicle with tyre pressure monitoring system, switch off ignition.

Temperature dependency

The tyre pressure depends on the temperature of the tyre. During driving, tyre temperature and pressure increase. Tyre pressure

values provided on the tyre information label and tyre pressure chart are valid for cold tyres, which means at 20 °C.

The pressure increases by nearly 10 kPa for a 10 °C temperature increase. This must be considered when warm tyres are checked.

The tyre pressure value displayed in the Driver Information Centre shows the real tyre pressure. A cooled down tyre will show a decreased value, which does not indicate an air leak.

Tyre pressure monitoring system

The tyre pressure monitoring system (TPMS) checks the pressure of all four tyres once a minute when vehicle speed exceeds a certain limit.

Caution
Tyre pressure monitoring system warns only about low tyre pressure condition and does not replace regular tyre maintenance by the driver.

All wheels must be equipped with pressure sensors and the tyres must have the prescribed pressure.

Note
In countries where the tyre pressure monitoring system is legally required, the use of wheels without pressure sensors will invalidate the vehicle operating permit.

The current tyre pressures can be shown in the **Vehicle Information Menu** in the Driver Information Centre.

The menu can be selected by the buttons on the turn signal lever.

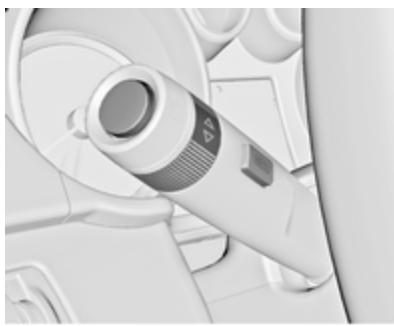

Press **MENU** to select the **Vehicle Information Menu**.

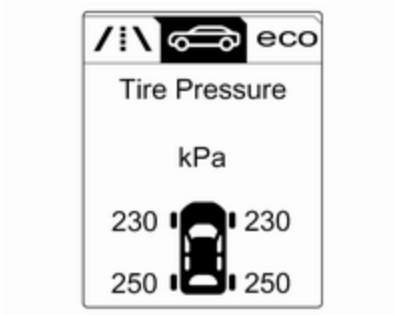

Turn the adjuster wheel to select the tyre pressure monitoring system.

System status and pressure warnings are displayed by a message with the corresponding tyre flashing in the Driver Information Centre.

The system considers the tyre temperature for the warnings.

A detected low tyre pressure condition is indicated by illumination of control indicator (!) ⇨ 91.

If (!) illuminates, stop as soon as possible and inflate the tyres as recommended ⇨ 271.

If (!) flashes for 60-90 seconds and then illuminates continuously, there is a fault in the system. Consult a workshop.

After inflating, driving may be required to update the tyre pressure values in the Driver Information Centre. During this time (!) may illuminate.

If (!) illuminates at lower temperatures and extinguishes after some driving, this could be an indicator for approaching a low tyre pressure condition. Check tyre pressure.

Vehicle messages ⇨ 99.

If the tyre pressure must be reduced or increased, switch off ignition.

Only mount wheels with pressure sensors, otherwise the tyre pressure will not be displayed and (!) illuminates continuously.

A spare wheel or temporary spare wheel is not equipped with pressure sensors. The tyre pressure monitoring system is not operational for these wheels. Control indicator (!) illuminates. For the further three wheels the system remains operational.

The use of commercially available liquid tyre repair kits can impair the function of the system. Factory-approved repair kits can be used.

Operating electronic devices or being close to facilities using similar wave frequencies could disrupt the tyre pressure monitoring system.

Each time the tyres are replaced, tyre pressure monitoring system sensors must be dismounted and serviced. For the screwed sensor: replace valve core and sealing ring. For clipped sensor: replace complete valve stem.

Vehicle loading status

Adjust tyre pressure to load condition according to the tyre information label or tyre pressure chart ⇨ 271, and select the appropriate setting in the **Tyre load** menu in the Driver Information Centre ⇨ 93. This setting is the reference for the tyre pressure warnings.

The **Tyre Load** menu only appears if the vehicle is in a standstill and the parking brake is applied. On vehicles with automatic transmission, the selector lever must be in **P**.

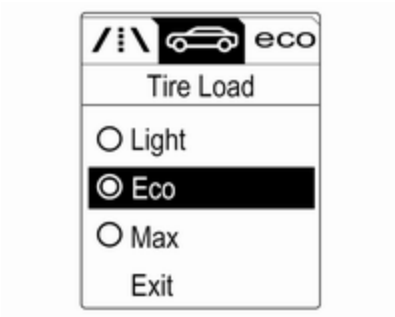

Select:

- **Light** for comfort pressure up to 3 people.
- **Eco** for Eco pressure up to 3 people.
- **Max** for full load.

Tyre pressure sensor matching process

Each tyre pressure sensor has a unique identification code. The identification code must be matched to a new wheel position after rotating the wheels or exchanging the complete wheel set and if one or more tyre pressure sensors were replaced.

The tyre pressure sensor matching process should also be performed after replacing a spare wheel with a road wheel containing the tyre pressure sensor.

The malfunction light ⓘ and the warning message or code should extinguish at the next ignition cycle. The sensors are matched to the wheel positions using a relearn tool, in the following order: left side front wheel, right side front wheel, right side rear wheel and left side rear wheel. The turn signal light at the current active position is illuminated until the sensor is matched.

Consult a workshop for service. There are two minutes to match the first wheel position, and five minutes overall to match all four wheel positions. If it takes longer, the matching process stops and must be restarted.

The tyre pressure sensor matching process is:

1. Apply the parking brake.
2. Turn the ignition on.
3. On vehicles with automatic transmission: set the selector lever to **P**.

   On vehicles with manual transmission: select neutral.
4. Use **MENU** on the turn signal lever to select the **Vehicle Information Menu** in the Driver Information Centre.
5. Turn the adjuster wheel to scroll to the tyre pressure menu.
6. Press **SET/CLR** to begin the sensor matching process. A message requesting acceptance of the process should be displayed.

   Press **SET/CLR** again to confirm the selection. The horn sounds twice to indicate the receiver is in relearn mode.
7. Start with the left side front wheel.
8. Place the relearn tool against the tyre sidewall, near the valve stem. Then press the button to activate the tyre pressure sensor. A horn chirp confirms that the sensor identification code has been matched to this wheel position.

9. Proceed to the right side front wheel, and repeat the procedure in Step 8.
10. Proceed to the right side rear wheel, and repeat the procedure in Step 8.
11. Proceed to the left side rear wheel, and repeat the procedure in Step 8. The horn sounds twice to indicate the sensor identification code has been matched to the left side rear tyre, and the tyre pressure sensor matching process is no longer active.
12. Turn off the ignition.
13. Set all four tyres to the recommended air pressure level as indicated on the tyre pressure label.
14. Ensure the tyre loading status is set according to the selected pressure ⇨ 93.

Tread depth

Check tread depth at regular intervals.

Tyres should be replaced for safety reasons at a tread depth of 2-3 mm (4 mm for winter tyres).

For safety reasons it is recommended that the tread depth of the tyres on one axle should not vary by more than 2 mm.

The legally permissible minimum tread depth (1.6 mm) has been reached when the tread has worn down as far as one of the tread wear indicators (TWI). Their position is indicated by markings on the sidewall.

If there is more wear at the front than the rear, swap round front wheels and rear wheels periodically. Ensure that the direction of rotation of the wheels is the same as before.

Tyres age, even if they are not used. We recommend tyre replacement every 6 years.

Changing tyre and wheel size

If tyres of a different size than those fitted at the factory are used, it may be necessary to reprogramme the speedometer as well as the nominal tyre pressure and make other vehicle modifications.

After converting to a different tyre size, have the label with tyre pressures replaced.⇨ 231

⚠Warning

The use of unsuitable tyres or wheels may lead to accidents and will invalidate the vehicle operating permit.

Wheel covers

Wheel covers and tyres that are factory approved for the respective vehicle and comply with all of the relevant wheel and tyre combination requirements must be used.

If the wheel covers and tyres used are not factory approved, the tyres must not have a rim protection ridge.

Wheel covers must not impair brake cooling.

⚠ Warning
Use of unsuitable tyres or wheel covers could lead to sudden pressure loss and thereby accidents.

Vehicles with steel wheels: When using locking wheel nuts, do not attach wheel covers.

Tyre chains

Use tyre chains only on front wheels.

⚠ Warning
Damage may lead to tyre blowout.

4-door notchback
Always use fine mesh chains that add no more than 10 mm to the tyre tread and the inboard sides (including chain lock).

Tyre chains are only permitted on tyres of size 205/60 R16 and 215/50 R17.

3-door hatchback
Tyre chains are permitted on tyres of size 225/55 R17. Always use fine mesh chains that add no more than 10 mm to the tyre tread and the inboard sides (including chain lock).

Tyre chains are also permitted on tyres of size 245/45 R18. Always use fine mesh chains that add no more than 7 mm to the tyre tread and the inboard sides (including chain lock).

OPC Version
Tyre chains are permitted on tyres of size 235/45 R18. Always use fine mesh chains that add no more than 10 mm to the tyre tread and the inboard sides (including chain lock).

General
The use of tyre chains is not permitted on the temporary spare wheel.

Tyre repair kit

Minor damage to the tyre tread can be repaired with the tyre repair kit.

Do not remove foreign bodies from the tyres.

Tyre damage exceeding 4 mm or that is at the tyre's sidewall cannot be repaired with the tyre repair kit.

⚠Warning

Do not drive faster than 80 km/h.

Do not use for a lengthy period.

Steering and handling may be affected.

If you have a flat tyre:

Apply the parking brake and engage first gear, reverse gear or **P**.

The tyre repair kit is in a compartment under the floor cover in the load compartment.

The illustrations show different versions.

1. Take the tyre repair kit from the compartment.
2. Remove the compressor.

3. Remove the electrical connection cable and air hose from the stowage compartments on the underside of the compressor.

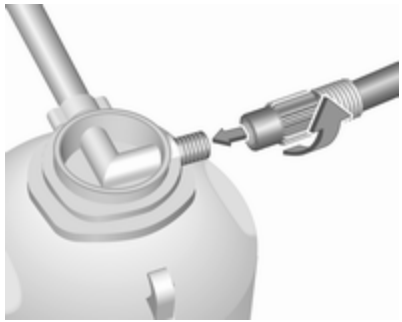

4. Screw the compressor air hose to the connection on the sealant bottle.
5. Fit the sealant bottle into the retainer on the compressor.

   Set the compressor near the tyre in such a way that the sealant bottle is upright.

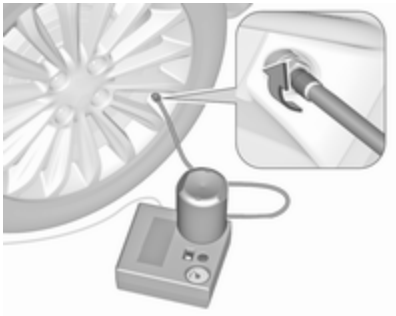

6. Unscrew valve cap from defective tyre.
7. Screw the filler hose to the tyre valve.
8. The switch on the compressor must be set to O.
9. Connect the compressor plug to the power outlet or cigarette lighter socket.

   To avoid discharging the battery, we recommend running the engine.

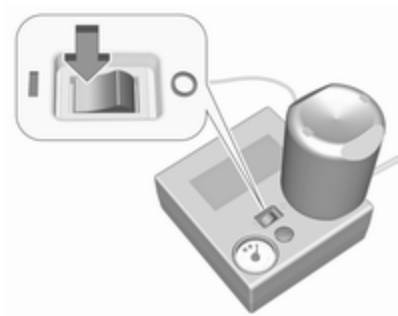

10. Set the rocker switch on the compressor to I. The tyre is filled with sealant.
11. The compressor pressure gauge briefly indicates up to 6 bar whilst the sealant bottle is emptying (approx. 30 seconds). Then the pressure starts to drop.
12. All of the sealant is pumped into the tyre. Then the tyre is inflated.
13. The prescribed tyre pressure should be obtained within ten minutes. Tyre pressure ⇨ 271. When the correct pressure is obtained, switch off the compressor.

If the prescribed tyre pressure is not obtained within ten minutes, remove the tyre repair kit. Move the vehicle one tyre rotation. Reattach the tyre repair kit and continue the filling procedure for ten minutes. If the prescribed tyre pressure is still not obtained, the tyre is too badly damaged. Seek the assistance of a workshop.

Drain excess tyre pressure with the button over the pressure indicator.

Do not run the compressor longer than ten minutes.

14. Detach the tyre repair kit. Push catch on bracket to remove sealant bottle from bracket. Screw the tyre inflation hose to the free connection of the sealant bottle. This prevents sealant from escaping. Stow tyre repair kit in load compartment.
15. Remove any excess sealant using a cloth.
16. Take the label indicating maximum permitted speed from the sealant bottle and affix in the driver's field of view.
17. Continue driving immediately so that sealant is evenly distributed in the tyre. After driving approx. 10 km (but no more than ten minutes), stop and check tyre pressure. Screw compressor air hose directly onto tyre valve and compressor when doing this.

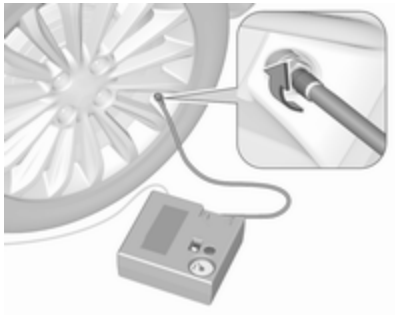

If tyre pressure is more than 1.3 bar, set it to the correct value. Repeat the procedure until there is no more loss of pressure.

If the tyre pressure has fallen below 1.3 bar, the vehicle must not be used. Seek the assistance of a workshop.

18. Stow away tyre repair kit in load compartment.

Note
The driving characteristics of the repaired tyre are severely affected, therefore have this tyre replaced.

If unusual noise is heard or the compressor becomes hot, turn compressor off for at least 30 minutes.

The built-in safety valve opens at a pressure of 7 bar.

Note the expiry date of the kit. After this date its sealing capability is no longer guaranteed. Pay attention to storage information on sealant bottle.

Replace the used sealant bottle. Dispose of the bottle as prescribed by applicable laws.

The compressor and sealant can be used from approx. -30 °C.

The adapters supplied can be used to pump up other items e.g. footballs, air mattresses, inflatable dinghies etc. They are located on the underside of the compressor. To remove, screw on compressor air hose and withdraw adapter.

Wheel changing

Some vehicles are equipped with a tyre repair kit instead of a spare wheel ⇨ 235.

Make the following preparations and observe the following information:

- Park the vehicle on a level, firm and non-skid surface. The front wheels must be in the straight-ahead position.
- Apply the parking brake and engage first gear, reverse gear or **P**.
- Remove the spare wheel ⇨ 242.
- Never change more than one wheel at once.
- Use the jack only to change wheels in case of puncture, not for seasonal winter or summer tyre change.
- The jack is maintenance-free.
- If the ground on which the vehicle is standing is soft, a solid board (max. 1 cm thick) should be placed under the jack.
- Take heavy objects out of the vehicle before jacking up.
- No people or animals may be in the vehicle when it is jacked-up.
- Never crawl under a jacked-up vehicle.
- Do not start the vehicle when it is raised on the jack.
- Clean wheel nuts and thread with a clean cloth before mounting the wheel.

⚠Warning

Do not grease wheel bolt, wheel nut and wheel nut cone.

1. Disengage wheel nut caps with a screwdriver and remove. Pull off the wheel cover. Vehicle tools ⇨ 227.

   Alloy wheels: Disengage wheel nut caps with a screwdriver and remove. To protect the wheel, place a soft cloth between the screwdriver and the alloy wheel.

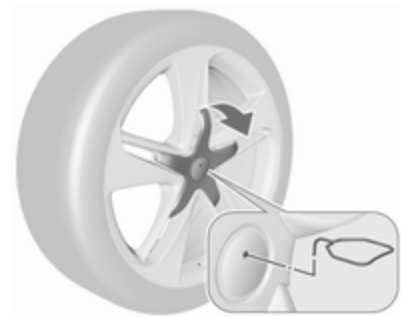

   Alloy wheels with centre wheel bolt cap: Disengage centre cap by inserting and pulling the extractor in the recess of the brand emblem. Vehicle tools ⇨ 227.

2. Two types of jacks and wheel nut wrenches are possible depending on the version. Vehicle tools ⇨ 227.

   Variant 1a with rigid wheel wrench:

Install the wheel wrench ensuring that it locates securely and loosen each wheel nut by half a turn.

Variants 1b, 2 and 3 with foldable wheel wrench:

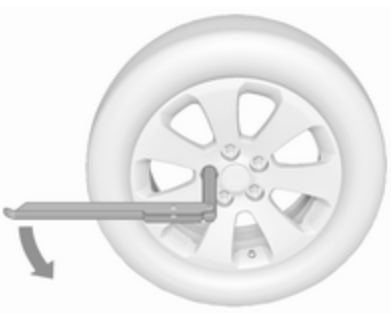

Fold out the wheel wrench and install ensuring that it locates securely and loosen each wheel nut by half a turn.

The wheels might be protected by locking wheel nuts. To loosen these specific nuts first attach the adapter onto the head of the nut before installing the wheel wrench. The adapter is located in the glovebox.

3. Ensure the jack is correctly positioned under the relevant vehicle jacking point.

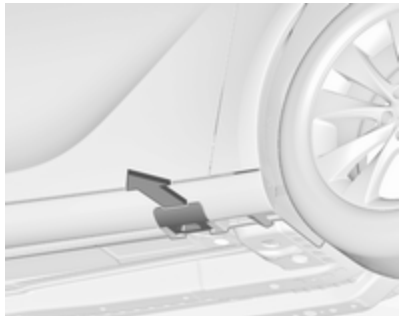

Some versions have sill panellings with covered vehicle jacking points: pull out the cover at the respective jacking point firstly.

4. **3-door hatchback and 4-door notchback, jack variants 1a, 1b and 3** ⇨ 227**:**

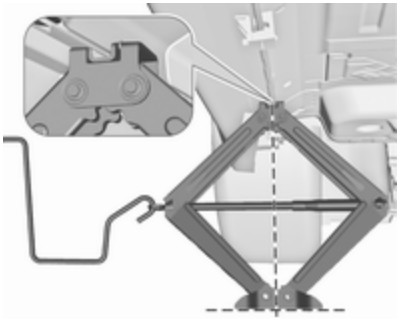

Set the jack to the necessary height. Position it directly below the jacking point in a manner that prevents it from slipping.

Attach jack handle and with the jack correctly aligned rotate handle until wheel is clear of the ground.

5. Unscrew the wheel nuts.
6. Change the wheel. Spare wheel ⇨ 242.
7. Screw on the wheel nuts.
8. Lower the vehicle and remove jack.
9. Install the wheel wrench ensuring that it is located securely and tighten each nut in a crosswise sequence. Tightening torque is 140 Nm.
10. Align the valve hole in the wheel cover with the tyre valve before installing.

    Install wheel nut caps.

    Install centre cap on alloy wheels.
11. Install vehicle jacking point cover on versions with sill panelling.
12. Stow the replaced wheel ⇨ 242, the vehicle tools ⇨ 227 and the adapter for the locking wheel nuts ⇨ 60.
13. Check the tyre pressure of the installed tyre and the wheel nut torque as soon as possible.

Have the defective tyre renewed or repaired as soon as possible.

Jacking position for lifting platform

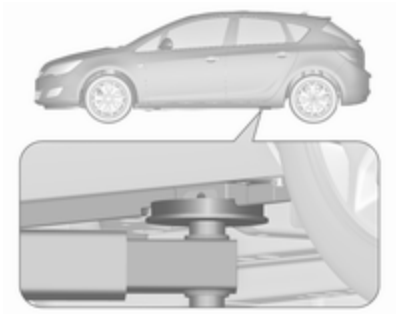

Rear arm position of the lifting platform centrically under the recess of the sill.

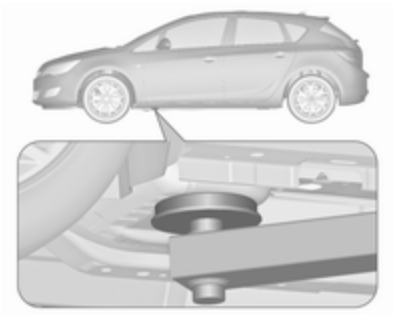

Front arm position of the lifting platform at the underbody.

Spare wheel

Some vehicles are equipped with a tyre repair kit instead of a spare wheel.

If mounting a spare wheel, which is different from the other wheels, this wheel might be classified as a temporary spare wheel and the corresponding speed limits apply, even though no label indicates this. Seek the assistance of a workshop to check the applicable speed limit.

The spare wheel has always a steel rim.

Caution
The use of a spare wheel that is smaller than the other wheels or in combination with winter tyres could affect driveability. Have the defective tyre replaced as soon as possible.

The spare wheel is located in the load compartment beneath the floor covering. It is secured with a wing nut.

To remove:

1. Open the floor cover.

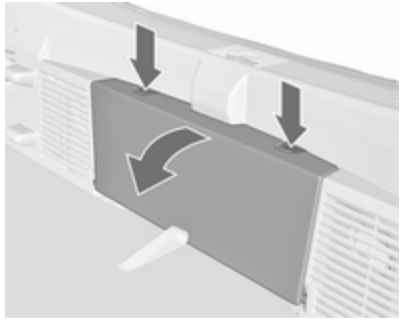

2. Only 3-door hatchback: remove rear storage by pressing both buttons. Fold down cover and extract storage upwards.
3. The spare wheel is secured with a wing nut. Loosen nut, remove conus (only 3-door hatchback) to take out the spare wheel.

   Under the spare wheel there is the box with vehicle tools.
4. When, after a wheel change, no wheel is placed in the spare wheel well, secure the tool box by tightening the wing nut and close the floor cover.

Stowing a damaged full size wheel in the load compartment, 3-door hatchback

The spare wheel well is not designed for other tyre sizes than the spare wheel. A damaged full size wheel must be stowed in the load compartment and secured with a strap. Vehicle tools ⇨ 227. To secure the wheel:

1. Position the wheel facing upwards, close to one sidewall of the load compartment.

2. Place the loop end of the strap through the front lashing eye on the appropriate side.
3. Place the hook end of the strap through the loop and pull it until the strap is fastened securely to the lashing eye.

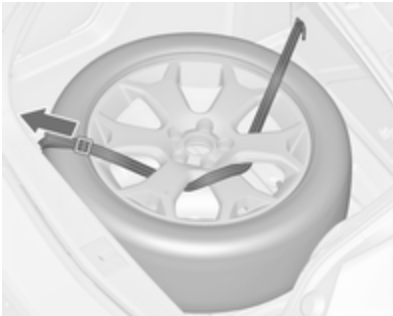

4. Insert the strap through the spokes of the wheel as shown in the illustration.
5. Mount the hook to the rear lashing eye.
6. Tighten the strap and secure it using the buckle.

⚠ Danger

Always drive with folded up and engaged rear seat backrests when stowing a damaged full size wheel in the load compartment.

Stowing a damaged full size wheel in the spare wheel well, 4-door notchback

Vehicles equipped with a full size spare wheel:

A damaged full size wheel must be stowed outside up in the spare wheel well secured with the wing nut.

The floor cover can be placed on the projecting wheel.

Vehicles equipped with a temporary spare wheel:
Secure a damaged full size wheel facing upwards with the wing nut in the spare wheel well after exchanging the thread bolt by an extension bolt, placed in the tool bag ⇨ 227. To replace the bolt:

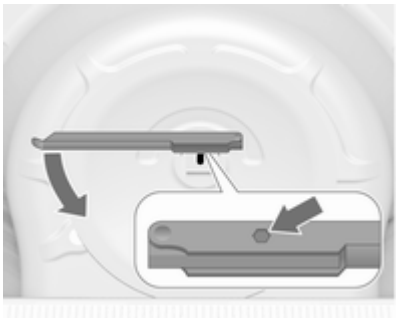

1. Install the hexagon key of the wheel wrench ensuring that it locates securely on the bolt.
2. Turn the wheel wrench anticlockwise to loosen the bolt. Remove the bolt.
3. Take the extension bolt from the tool bag ⇨ 227 and screw it in hand-tight using the hexagon key of the wheel wrench.
4. Store the tool box and the damaged wheel with the side facing upwards, in the spare wheel well and secure it by turning the wing nut clockwise on the bolt.

The floor cover can be placed on the projecting wheel.

Replace the extension bolt with the short bolt before placing the temporary spare wheel in the well after renewing or repairing the defective wheel.

Stowing the spare wheel back in the well after replacing the damaged wheel

1. Open the floor cover, loosen and remove wing nut.

   Only 3-door hatchback: open floor cover, remove rear storage, loosen and remove wing nut and conus.

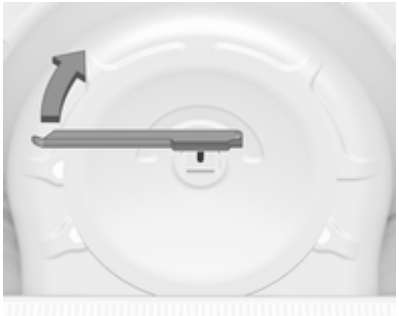

2. Only 4-door notchback with temporary spare wheel: replace the extension bolt with the short bolt by using the hexagon key of the wheel wrench.
3. Place the tools in the tool box or the tool bag ⇨ 227.
4. Place spare wheel facing upwards, in the wheel well and secure by tightening the wing nut.

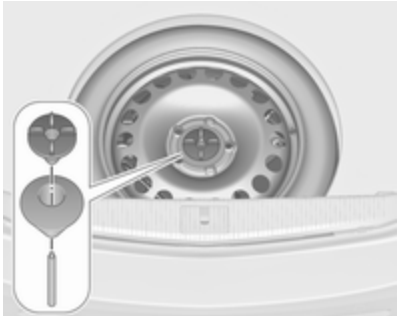

Only 3-door hatchback: position the excentric conus in the recess of the spare wheel before tightening the wing nut.

5. Close floor cover and insert rear storage (only 3-door hatchback).

⚠ Warning

Storing a jack, a wheel or other equipment in the load compartment could cause injury if they are not secured properly. During a sudden stop or a collision, loose equipment could strike someone.

Always store jack and tools in the respective storage compartments and secure them by fixing.

Damaged wheel placed in the load compartment must always be secured with the strap.

Temporary spare wheel

Caution

The use of a spare wheel that is smaller than the other wheels or in combination with winter tyres could affect driveability. Have the defective tyre replaced as soon as possible.

Only mount one temporary spare wheel. Do not drive faster than 80 km/h. Take curves slowly. Do not use for a long period of time.

If your vehicle gets a flat tyre on the rear while towing another vehicle, mount the temporary spare wheel at the front and the full tyre at the rear.

Tyre chains ⇨ 235.

Spare wheel with directional tyre

Fit directional tyres such that they roll in the direction of travel. The rolling direction is indicated by a symbol (e.g. an arrow) on the sidewall.

The following applies to tyres fitted opposing the rolling direction:

- Driveability may be affected. Have the defective tyre renewed or repaired as soon as possible and fit it instead of the spare wheel.
- Drive particularly carefully on wet and snow-covered road surfaces.

Jump starting

Do not start with quick charger.

A vehicle with a discharged vehicle battery can be started using jump leads and the vehicle battery of another vehicle.

⚠Warning

Be extremely careful when starting with jump leads. Any deviation from the following instructions can lead to injuries or damage caused by battery explosion or damage to the electrical systems of both vehicles.

⚠Warning

Avoid contact of the battery with eyes, skin, fabrics and painted surfaces. The fluid contains sulphuric acid which can cause injuries and damage in the event of direct contact.

- Never expose the vehicle battery to naked flames or sparks.
- A discharged vehicle battery can already freeze at a temperature of 0 °C. Defrost the frozen vehicle battery before connecting jump leads.
- Wear eye protection and protective clothing when handling a vehicle battery.
- Use a booster vehicle battery with the same voltage (12 Volts). Its capacity (Ah) must not be much less than that of the discharged vehicle battery.
- Use jump leads with insulated terminals and a cross section of at least 16 mm^2 (25 mm^2 for diesel engines).
- Do not disconnect the discharged vehicle battery from the vehicle.
- Switch off all unnecessary electrical consumers.
- Do not lean over the vehicle battery during jump starting.
- Do not allow the terminals of one lead to touch those of the other lead.
- The vehicles must not come into contact with each other during the jump starting process.
- Apply the parking brake, transmission in neutral, automatic transmission in **P**.
- Open the positive terminal protection caps of both vehicle batteries.

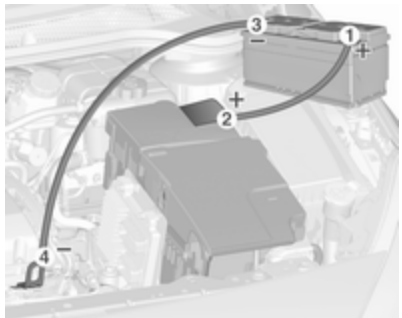

Lead connection order:

1. Connect the red lead to the positive terminal of the booster vehicle battery.
2. Connect the other end of the red lead to the positive terminal of the discharged vehicle battery.

3. Connect the black lead to the negative terminal of the booster vehicle battery.
4. Connect the other end of the black lead to a vehicle grounding point, such as the engine block or an engine mounting bolt. Connect as far away from the discharged vehicle battery as possible, however at least 60 cm.

Route the leads so that they cannot catch on rotating parts in the engine compartment.

To start the engine:

1. Start the engine of the vehicle providing the jump.
2. After five minutes, start the other engine. Start attempts should be made for no longer than 15 seconds at an interval of one minute.
3. Allow both engines to idle for approx. three minutes with the leads connected.
4. Switch on electrical consumers (e.g. headlights, heated rear window) of the vehicle receiving the jump start.
5. Reverse above sequence exactly when removing leads.

Towing

Towing the vehicle

Insert a screwdriver in the slot at the lower part of the cap. Release the cap by carefully moving the screwdriver downwards.

The towing eye is stowed with the vehicle tools ⇨ 227.

Screw in the towing eye as far as it will go until it stops in a horizontal position.

Attach a tow rope – or better still a tow rod – to the towing eye.

The towing eye must only be used for towing and not for recovering the vehicle.

Switch on ignition to release steering wheel lock and to permit operation of brake lights, horn and windscreen wiper.

Switch the selector lever to neutral.

Release the parking brake.

Caution

Drive slowly. Do not drive jerkily. Excessive tractive force can damage the vehicle.

When the engine is not running, considerably more force is needed to brake and steer.

To prevent the entry of exhaust gases from the towing vehicle, switch on the air recirculation and close the windows.

Vehicles with automatic transmission: The vehicle must be towed facing forwards, not faster than 80 km/h nor further than 100 km. In all other cases and when the transmission is defective, the front axle must be raised off the ground.

Seek the assistance of a workshop.

After towing, unscrew the towing eye.

Insert cap at the top and engage downwards.

Towing another vehicle

Insert a screwdriver in the slot at the lower bend of the cap. Release the cap by carefully moving the screwdriver downwards.

The towing eye is stowed with the vehicle tools ⇨ 227.

Screw in the towing eye as far as it will go until it stops in a horizontal position.

The lashing eye at the rear underneath the vehicle must never be used as a towing eye.

Attach a tow rope – or even better a tow bar – to the towing eye.

The towing eye must only be used for towing and not for recovering a vehicle.

Caution

Drive slowly. Do not drive jerkily. Excessive tractive force can damage the vehicle.

After towing, unscrew the towing eye.

Insert cap at the top and engage downwards.

Appearance care

Exterior care

Locks

The locks are lubricated at the factory using a high quality lock cylinder grease. Use de-icing agent only when absolutely necessary, as this has a degreasing effect and impairs lock function. After using a de-icing agent, have the locks regreased by a workshop.

Washing

The paintwork of your vehicle is exposed to environmental influences. Wash and wax your vehicle regularly. When using automatic vehicle washes, select a programme that includes waxing.

Bird droppings, dead insects, resin, pollen and the like should be cleaned off immediately, as they contain aggressive constituents which can cause paint damage.

If using a vehicle wash, comply with the vehicle wash manufacturer's instructions. The windscreen wiper and rear window wiper must be switched off. Remove antenna and external accessories such as roof racks etc.

If you wash your vehicle by hand, make sure that the insides of the wheel housings are also thoroughly rinsed out.

Clean edges and folds on opened doors and the bonnet as well as the areas they cover.

Clean bright metal mouldings with a cleaning solution approved for aluminium to avoid damages.

Caution
Always use a cleaning agent with a pH value of four to nine. Do not use cleaning agents on hot surfaces.

Have the door hinges of all doors greased by a workshop.

Do not clean the engine compartment with a steam-jet or high-pressure jet cleaner.

On vehicles with emblem touchpad: when cleaning with a high-pressure jet cleaner ensure a minimum distance of 30 cm when working around the tailgate to prevent unintended unlocking.

Thoroughly rinse and leather-off the vehicle. Rinse leather frequently. Use separate leathers for painted and glass surfaces: remnants of wax on the windows will impair vision.

Do not use hard objects to remove spots of tar. Use tar removal spray on painted surfaces.

Exterior lights

Headlight and other light covers are made of plastic. Do not use any abrasive or caustic agents, do not use an ice scraper, and do not clean them dry.

Polishing and waxing

Wax the vehicle regularly (at the latest when water no longer beads). Otherwise, the paintwork will dry out.

Polishing is necessary only if the paint has become dull or if solid deposits have become attached to it.

Paintwork polish with silicone forms a protective film, making waxing unnecessary.

Plastic body parts must not be treated with wax or polishing agents.

Windows and windscreen wiper blades

Use a soft lint-free cloth or chamois leather together with window cleaner and insect remover.

When cleaning the rear window from inside, always wipe in parallel to the heating element to prevent damage.

For mechanical removal of ice, use a sharp-edged ice scraper. Press the scraper firmly against the glass so that no dirt can get under it and scratch the glass.

Remove dirt residues from smearing wiper blades by using a soft cloth and window cleaner. Also make sure to remove any residues such as wax, insect residues and similar from the window.

Ice residues, pollution and continuous wiping on dry windows will damage or even destroy the wiper blades.

Sunroof

Never clean with solvents or abrasive agents, fuels, aggressive media (e.g. paint cleaner, acetone-containing solutions etc.), acidic or highly alkaline media or abrasive pads. Do not apply wax or polishing agents to the sunroof.

Glass panel

Never clean with solvents or abrasive agents, fuels, aggressive media (e.g. paint cleaner, acetone-containing solutions etc.), acidic or highly alkaline media or abrasive pads. Do not apply wax or polishing agents to the glass panel.

Wheels and tyres

Do not use high-pressure jet cleaners.

Clean rims with a pH-neutral wheel cleaner.

Rims are painted and can be treated with the same agents as the body.

Paintwork damage

Rectify minor paintwork damage with a touch-up pen before rust forms. Have more extensive damage or rust areas repaired by a workshop.

Underbody

Some areas of the vehicle underbody have a PVC undercoating while other critical areas have a durable protective wax coating.

After the underbody is washed, check the underbody and have it waxed if necessary.

Bitumen/rubber materials could damage the PVC coating. Have underbody work carried out by a workshop.

Before and after winter, wash the underbody and have the protective wax coating checked.

Liquid gas system

⚠ Danger

Liquid gas is heavier than air and can collect in sink points.

Take care when performing work at the underbody in a pit.

For painting work and when using a drying booth at a temperature above 60 °C, the liquid gas tank must be removed.

Do not make any modifications to the liquid gas system.

Towing equipment

Do not clean the coupling ball bar with a steam-jet or high-pressure jet cleaner.

Air shutter

Clean the shutter system in the front bumper to maintain correct functionality.

Interior care

Interior and upholstery

Only clean the vehicle interior, including the instrument panel fascia and panelling, with a dry cloth or interior cleaner.

Clean the leather upholstery with clear water and a soft cloth. In case of heavy soiling, use leather care.

The instrument cluster and the displays should only be cleaned using a soft damp cloth. If necessary use a weak soap solution.

Clean fabric upholstery with a vacuum cleaner and brush. Remove stains with an upholstery cleaner.

Clothing fabrics may not be colourfast. This could cause visible discolourations, especially on light-coloured upholstery. Removable stains and discolourations should be cleaned as soon as possible.

Clean seat belts with lukewarm water or interior cleaner.

Caution

Close Velcro fasteners as open Velcro fasteners on clothing could damage seat upholstery.

The same applies to clothing with sharp-edged objects, like zips or belts or studded jeans.

Plastic and rubber parts

Plastic and rubber parts can be cleaned with the same cleaner as used to clean the body. Use interior cleaner if necessary. Do not use any other agent. Avoid solvents and petrol in particular. Do not use high-pressure jet cleaners.

Service and maintenance

General information **253**
Service information 253
Recommended fluids, lubricants and parts **254**
Recommended fluids and lubricants 254

General information

Service information

In order to ensure economical and safe vehicle operation and to maintain the value of your vehicle, it is of vital importance that all maintenance work is carried out at the proper intervals as specified.

The detailed, up-to-date service schedule for your vehicle is available at the workshop.

Service display ⇨ 83.

European service intervals

Maintenance of your vehicle is required every 30,000 km or after 1 year, whichever occurs first, unless otherwise indicated in the service display.

A shorter service interval can be valid for severe driving behaviour, e.g. for taxis and police vehicles.

The European service intervals are valid for the following countries: Andorra, Austria, Belgium, Bosnia-Herzegovina, Bulgaria, Croatia, Cyprus, Czech Republic, Denmark, Estonia, Finland, France, Germany, Greece, Greenland, Hungary, Iceland, Ireland, Italy, Latvia, Liechtenstein, Lithuania, Luxembourg, Macedonia, Malta, Monaco, Montenegro, Netherlands, Norway, Poland, Portugal, Romania, San Marino, Serbia, Slovakia, Slovenia, Spain, Sweden, Switzerland, United Kingdom.

Service display ⇨ 83.

International service intervals

Maintenance of your vehicle is required every 15,000 km or after 1 year, whichever occurs first, unless otherwise indicated in the service display.

A shorter service interval can be valid for severe driving behaviour. Severe operating conditions exist if one or more of the following circumstances occur frequently: Cold starting, stop and go operation, trailer operation, mountain driving, driving on poor and sandy road surfaces, increased air

pollution, presence of airborne sand and high dust content, driving at high altitude and large variations of temperature. Under these severe operating conditions, certain service work may be required more frequently than the regular service interval.

The international service intervals are valid for the countries which are not listed in the European service intervals.

Service display ⇨ 83.

Confirmations

Confirmation of service is recorded in the Service and Warranty Booklet. The date and mileage is completed with the stamp and signature of the servicing workshop.

Make sure that the Service and Warranty Booklet is completed correctly as continuous proof of service is essential if any warranty or goodwill claims are to be met, and is also a benefit when selling the vehicle.

Service interval with remaining engine oil life duration

The service interval is based on several parameters depending on usage.

The service display lets you know when to change the engine oil.

Service display ⇨ 83.

Recommended fluids, lubricants and parts

Recommended fluids and lubricants

Only use products that meet the recommended specifications.

⚠ Warning

Operating materials are hazardous and could be poisonous. Handle with care. Pay attention to information given on the containers.

Engine oil

Engine oil is identified by its quality and its viscosity. Quality is more important than viscosity when selecting which engine oil to use. The oil quality ensures e.g. engine cleanliness, wear protection and oil aging control, whereas viscosity grade gives information on the oil's thickness over a temperature range.

Dexos is the newest engine oil quality that provides optimum protection for petrol and diesel engines. If it is unavailable, engine oils of other listed qualities must be used.
Recommendations for petrol engines are also valid for Compressed Natural Gas (CNG), Liquified Petroleum Gas (LPG) and Ethanol (E85) fuelled engines.

Select the appropriate engine oil based on its quality and on the minimum ambient temperature ⇨ 259.

Topping up engine oil

Caution
In case of any spilled oil, wipe it up and dispose it properly.

Engine oils of different manufacturers and brands can be mixed as long as they comply with the required engine oil quality and viscosity.

Use of engine oils for all petrol engines with only ACEA quality is prohibited, since it can cause engine damage under certain operating conditions.

Select the appropriate engine oil based on its quality and on the minimum ambient temperature ⇨ 259.

Additional engine oil additives

The use of additional engine oil additives could cause damage and invalidate the warranty.

Engine oil viscosity grades

The SAE viscosity grade gives information of the thickness of the oil.

Multigrade oil is indicated by two figures, e.g. SAE 5W-30. The first figure, followed by a W, indicates the low temperature viscosity and the second figure the high temperature viscosity.

Select the appropriate viscosity grade depending on the minimum ambient temperature ⇨ 259.

All of the recommended viscosity grades are suitable for high ambient temperatures.

Coolant and antifreeze

Use only organic acid type-long life coolant (LLC) antifreeze approved for the vehicle. Consult a workshop.

The system is factory filled with coolant designed for excellent corrosion protection and frost protection down to approx. -28 °C. In cold regions with very low temperatures, the factory filled coolant provides frost protection down to approx. -37 °C. This concentration should be maintained all year round. The use of additional coolant additives that intend to give additional corrosion protection or seal against minor leaks can cause function problems. Liability for consequences resulting from the use of additional coolant additives will be rejected.

Washer fluid

Use only washer fluid approved for the vehicle to prevent damage of wiper blades, paintwork, plastic and rubber parts. Consult a workshop.

Brake and clutch fluid

Over time, brake fluid absorbs moisture which will reduce braking effectiveness. The brake fluid should therefore be replaced at the specified interval.

Technical data

Vehicle identification **257**
Vehicle Identification Number .. 257
Identification plate 257
Engine identification 258
Vehicle data **259**
Recommended fluids and lubricants 259
Engine data 262
Performance 265
Vehicle weight 267
Vehicle dimensions 269
Capacities 270
Tyre pressures 271

Vehicle identification

Vehicle Identification Number

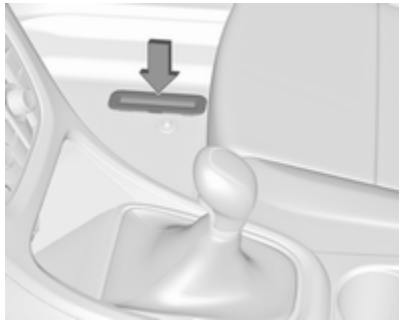

The Vehicle Identification Number may be stamped on the identification plate and on the floor pan, under the floor covering, visible under a cover.

The Vehicle Identification Number may be embossed on the instrument panel, visible through the windscreen, or in the engine compartment on the right body panel.

Identification plate

The identification plate is located on the front left or right door frame.

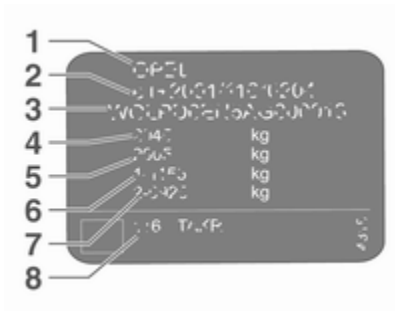

Information on identification label:

1 : manufacturer
2 : operating permit number
3 : vehicle identification number
4 : permissible gross vehicle weight rating in kg
5 : permissible gross train weight in kg
6 : maximum permissible front axle load in kg
7 : maximum permissible rear axle load in kg
8 : vehicle-specific or country-specific data

The combined total of front and rear axle loads must not exceed the permissible gross vehicle weight. For example, if the front axle is bearing its maximum permissible load, the rear axle can only bear a load that is equal to the gross vehicle weight minus the front axle load.

The technical data is determined in accordance with European Community standards. We reserve the right to make modifications. Specifications in the vehicle documents always have priority over those given in this manual.

Engine identification

The technical data tables show the engine identifier code. Engine data ⇨ 262.

To identify the respective engine, refer to the engine power in the EEC Certificate of Conformity provided with your vehicle or other national registration documents.

Vehicle data

Recommended fluids and lubricants

European service schedule

Required engine oil quality

	All European countries with European service interval ⇨ 253		
Engine oil quality	Petrol engine B14NET	All other petrol engines (including CNG, LPG, E85)	Diesel engines
dexos1 Gen2	✓	–	–
dexos2	–	✓	✓

All engines except B14NET: In case dexos quality is unavailable, you may not use max. one litre engine oil quality ACEA C3 once between each oil change.

Engine oil viscosity grades

	All European countries with European service interval ⇨ 253
Ambient temperature	Petrol and diesel engines
down to -25 °C	SAE 0W-30 or SAE 0W-40 SAE 5W-30 or SAE 5W-40
below -25 °C	SAE 0W-30 or SAE 0W-40

International service schedule

Required engine oil quality

	All countries with international service interval ➪ 253		
Engine oil quality	Petrol engine B14NET	All other petrol engines (including CNG, LPG, E85)	Diesel engines
dexos1 Gen2	✓	–	–
dexos2	–	✓	✓

In case dexos quality is unavailable you may use the oil qualities listed below:

	All countries with international service interval ➪ 253		
Engine oil quality	Petrol engine B14NET	All other petrol engines (including CNG, LPG, E85)	Diesel engines
ACEA A3/B4	–	✓	✓
ACEA C3	–	✓	✓

Engine oil viscosity grades

	All countries with international service interval ⇨ 253
Ambient temperature	Petrol and diesel engines
down to -25 °C	SAE 0W-30 or SAE 0W-40 SAE 5W-30 or SAE 5W-40
below -25 °C	SAE 0W-30 or SAE 0W-40
down to -20 °C	SAE 10W-30[1)] or SAE 10W-40[1)]

1) Permitted, but usage of oils with dexos quality is recommended.

Engine data

Engine identifier code	A14XER, B14XER	B14NEL	B14NET LPG, B14NET	B16XER	A16XHT	B16SHL	B16SHT
Sales designation	**1.4**	**1.4**	**1.4**	**1.6**	**1.6**	**1.6**	**1.6**
Engineering code	**A14XER**	**B14NET**	**B14NET**	**B16XER**		**B16SHT**	**B16SHT**
Piston displacement [cm^3]	1398	1364	1364	1598	1598	1598	1598
Engine power [kW]	74	88	103	85	125	125	147
at rpm	6000	4200-6000	4900-6000	6000	6000	4750-6000	5500
Torque [Nm]	130	200	200	155	260	260	280
at rpm	4000	1850-4200	1850-4900	4000	1650-3200	1650-4500	1650-5000
Fuel type	Petrol	Petrol	Petrol/Liquid gas	Petrol	Petrol	Petrol	Petrol
Octane rating RON[2)]							
recommended	95	95	95	95	98	98	98
possible	98	98	98	98	95	95	95
possible	91	91	91	91	91	91	91
Additional fuel type	–	–	Liquid gas (LPG)	–	–	–	–

2) A country specific label at the fuel filler flap can supersede the engine specific requirement.

Sales designation	1.6	1.8	2.0 OPC	1.3	1.6	1.6
Engine identifier code	A16LET	A18XER	B20NFT	A13DTE	B16DTH	B16DTL
Engineering code		A18XER	B20NFT		B16DTH	B16DTL
Piston displacement [cm^3]	1598	1796	1998	1248	1598	1598
Engine power [kW]	132	103	206	70	100	81
at rpm	5500	6300	5300	4000	3500-4000	3500
Torque [Nm]	230	175	400	190	320	300
at rpm	2200	3800	2400-4800	1750-3250	2000	1750-2000
Fuel type	Petrol	Petrol	Petrol	Diesel	Diesel	Diesel
Octane rating RON[3)]						
recommended	95	95	98			
possible	98	98	95			
possible	91	91	91			

3) A country specific label at the fuel filler flap can supersede the engine specific requirement.

Sales designation	1.7	1.7	1.7	2.0 Turbo	2.0 Turbo	2.0 Turbo
Engine identifier code	A17DTN	A17DTC	A17DTS	A20DTH	A20DTH	A20DTR
Engineering code				121 kW	96 kW	
Piston displacement [cm^3]	1686	1686	1686	1956	1956	1956
Engine power [kW]	74	81	96	121/117[4)]	96	143
at rpm	4000	4000	4000	4000	4000	4000
Torque [Nm]	260	280	300	350	300	400
at rpm	1750-2500	1750-2500	2000-2500	1750-2500	1750-2500	1750-2500
Fuel type	Diesel	Diesel	Diesel	Diesel	Diesel	Diesel

4) Detuned version.

Performance

3-door hatchback

Engine	A14XER	B14NEL	B14NET	A16LET	A16XHT	B16SHT	B16SHL
Maximum speed [km/h]							
Manual transmission	178[5)]	192	201	220	219	230	–
Automatic transmission	–	–	200	–	–	–	210

5) 4th gear.

Engine	A18XER	B20NFT	B16DTH	B16DTL	A20DTH 121 kW	A20DTH 96 kW	A20DTR
Maximum speed [km/h]							
Manual transmission	200	250	198	182	210	–[6)]	225
Automatic transmission	–	–	–	–	207	–	–

6) Value was not available at time of printing.

4-door notchback

Engine	B14XER	B14NET	B14NET LPG	A16LET	B16XER	A16XHT
Maximum speed [km/h]						
Manual transmission	183[5)]	207	202	223	193	222
Automatic transmission	–	205	–	213	185	215

5) 4th gear.

Engine	A13DTE	B16DTH	B16DTL	B16SHL
Maximum speed [km/h]				
Manual transmission	180	205	189	–
Automatic transmission	–	200	–	215

Vehicle weight

Kerb weight, basic model without any optional equipment

3-door hatchback	Engine	Manual transmission	Automatic transmission
without/with air conditioning [kg]	A14XER	1393/1408	–
	B14NEL	–/1437	–
	B14NET	–/1437	–/1471
	A16LET	1471	–
	A16XHT	–/1503	–
	B16SHT	–/1503	–
	B16SHL	–	–/1503
	A18XER	–/1437	–
	B20NFT	–/1550	–
	B16DTH	1503/1518	–
	B16DTL	1503/1518	–
	A20DTH	–/1550	–/1571
	A20DTR	–/1571	–

Optional equipment and accessories increase the kerb weight.

Loading information ⇨ 70.

Kerb weight, basic model without any optional equipment

4-door notchback	Engine	Manual transmission	Automatic transmission
without/with air conditioning [kg]	B14XER	1393/1405	–
	B14NET	1437/1449	–/1483
	B14NET LPG	1503/1515	–
	A16LET	–/1471	1503
	B16XER	1393/1405	–/1449
	A16XHT	–/1503	–/1503
	A13DTE	1471/1483	–
	B16SHL	–	–/1503
	B16DTH	1491/1503	–/1550
	B16DTL	1491/1503	–

Optional equipment and accessories increase the kerb weight.

Loading information ⇨ 70.

Vehicle dimensions

	3-door hatchback	4-door notchback
Length [mm]	4466	4658
Width without exterior mirrors [mm]	1840	1814
Width with two exterior mirrors [mm]	2020	2013
Height (without antenna) [mm]	1482	1500
Length of load compartment floor [mm]	855	1084
Length of load compartment with folded rear seats [mm]	1617	1778
Load compartment width [mm]	980	976
Load compartment height [mm]	512	546
Wheelbase [mm]	2695	2685
Turning circle diameter [m]	11.4	11.5

Capacities

Engine oil

Engine	A14XER, B14XER, B14NEL, B14NET LPG, B14NET	A16LET, B16XER, A18XER	A16XHT, B16SHT, B16SHL	B20NFT
including Filter [l]	4.0	4.5	5.5	6.0
between MIN and MAX [l]	1.0	1.0	1.0	1.0

Engine	A13DTE	B16DTH, B16DTL	A17DTC, A17DTN, A17DTS	A20DTH, A20DTR
including Filter [l]	3.5	5.0	5.4	4.5
between MIN and MAX [l]	1.0	1.0	1.0	1.0

Fuel tank

Petrol/diesel, refilling quantity [l]	56[7)]
LPG, refilling quantity [l]	34

7) A13DTE diesel engine in combination with special equipment: 46 litres.

Tyre pressures

Tyre pressures differ depending on the model variant. The order of the listed car models is as follows:

- 3-door hatchback
- 4-door notchback

Refer to the table header to find the correct tyre pressure for your model.

3-door hatchback		Comfort with up to 3 people		ECO with up to 3 people		With full load	
Engine	Tyres	front	rear	front	rear	front	rear
		[kPa/bar] ([psi])	[kPa/bar] ([psi])	[kPa/bar] ([psi])	[kPa/bar] ([psi])	[kPa/bar] ([psi])	[kPa/bar] ([psi])
A14XER	225/55 R17, 235/45 R19, 235/50 R18, 235/55 R17, 245/45 R18	210/2.1 (30)	210/2.1 (30)	250/2.5 (36)	250/2.5 (36)	220/2.2 (32)	260/2.6 (38)

3-door hatchback		Comfort with up to 3 people		ECO with up to 3 people		With full load	
Engine	Tyres	front	rear	front	rear	front	rear
		[kPa/bar] ([psi])	[kPa/bar] ([psi])	[kPa/bar] ([psi])	[kPa/bar] ([psi])	[kPa/bar] ([psi])	[kPa/bar] ([psi])
A16LET, A18XER	225/55 R17, 235/45 R19, 235/50 R18, 235/55 R17, 245/40 R20, 245/45 R18	210/2.1 (30)	210/2.1 (30)	250/2.5 (36)	250/2.5 (36)	220/2.2 (32)	260/2.6 (38)
B14NEL, B14NET	225/55 R17	210/2.1 (30)	210/2.1 (30)	300/3.0 (43)	300/3.0 (43)	220/2.2 (32)	270/2.7 (39)
	235/45 R19, 235/50 R18, 235/55 R17, 245/40 R20, 245/45 R18	210/2.1 (30)	210/2.1 (30)	270/2.7 (39)	270/2.7 (39)	220/2.2 (32)	270/2.7 (39)

3-door hatchback		Comfort with up to 3 people		ECO with up to 3 people		With full load	
Engine	Tyres	front	rear	front	rear	front	rear
		[kPa/bar] ([psi])	[kPa/bar] ([psi])	[kPa/bar] ([psi])	[kPa/bar] ([psi])	[kPa/bar] ([psi])	[kPa/bar] ([psi])
A16XHT,	225/55 R17	230/2.3 (33)	230/2.3 (33)	300/3.0 (43)	300/3.0 (43)	240/2.4 (35)	280/2.8 (41)
B16SHT, A20DTH, A20DTR, B16DTH, B16DTL, B16SHL	235/45 R19, 235/50 R18, 235/55 R17, 245/40 R20, 245/45 R18	230/2.3 (33)	230/2.3 (33)	270/2.7 (39)	270/2.7 (39)	240/2.4 (35)	280/2.8 (41)
B20NFT	235/45 R18, 245/40 R19	240/2.4 (35)	240/2.4 (35)	270/2.7 (39)	280/2.8 (41)	260/2.6 (38)	300/3.0 (43)
	245/35 R20	270/2.7 (39)	250/2.5 (36)	280/2.8 (41)	290/2.9 (42)	280/2.8 (41)	310/3.1 (44)
All	Temporary spare wheel T125/70 R17	420/4.2 (61)	420/4.2 (61)	–	–	420/4.2 (61)	420/4.2 (61)

4-door notchback		Comfort with up to 3 people		ECO with up to 3 people		With full load	
Engine	Tyres	front	rear	front	rear	front	rear
		[kPa/bar] ([psi])	[kPa/bar] ([psi])	[kPa/bar] ([psi])	[kPa/bar] ([psi])	[kPa/bar] ([psi])	[kPa/bar] ([psi])
B14NET LPG, B14NET	205/60 R16,	220/2.2 (32)	220/2.2 (32)	270/2.7 (39)	270/2.7 (39)	230/2.3 (33)	270/2.7 (39)
	205/65 R16,						
	215/50 R17,						
	215/60 R16,						
	225/45 R18,						
	225/50 R17,						
	235/40 R19						
B14XER	205/60 R16,	220/2.2 (32)	220/2.2 (32)	270/2.7 (39)	270/2.7 (39)	230/2.3 (33)	270/2.7 (39)
	215/50 R17,						
	215/60 R16						

4-door notchback		Comfort with up to 3 people		ECO with up to 3 people		With full load	
Engine	Tyres	front	rear	front	rear	front	rear
		[kPa/bar] ([psi])	[kPa/bar] ([psi])	[kPa/bar] ([psi])	[kPa/bar] ([psi])	[kPa/bar] ([psi])	[kPa/bar] ([psi])
A16LET	205/65 R16,	230/2.3 (33)	230/2.3 (33)	270/2.7 (39)	270/2.7 (39)	240/2.4 (35)	280/2.8 (41)
	215/60 R16,						
	215/50 R17,						
	225/50 R17,						
	235/45 R18						
	235/40 R19	240/2.4 (35)	220/2.2 (32)	–	–	250/2.5 (36)	290/2.9 (42)
	205/60 R16	250/2.5 (36)	230/2.3 (33)	270/2.7 (39)	270/2.7 (39)	260/2.6 (38)	300/3.0 (43)

4-door notchback		Comfort with up to 3 people		ECO with up to 3 people		With full load	
Engine	Tyres	front	rear	front	rear	front	rear
		[kPa/bar] ([psi])	[kPa/bar] ([psi])	[kPa/bar] ([psi])	[kPa/bar] ([psi])	[kPa/bar] ([psi])	[kPa/bar] ([psi])
B16XER	205/60 R16,	220/2.2 (32)	220/2.2 (32)	270/2.7 (39)	270/2.7 (39)	230/2.3 (33)	270/2.7 (39)
	215/50 R17,						
	215/60 R16,						
	225/45 R18,						
	235/40 R19						

4-door notchback		Comfort with up to 3 people		ECO with up to 3 people		With full load	
Engine	Tyres	front	rear	front	rear	front	rear
		[kPa/bar] ([psi])	[kPa/bar] ([psi])	[kPa/bar] ([psi])	[kPa/bar] ([psi])	[kPa/bar] ([psi])	[kPa/bar] ([psi])
A16XHT, B16DTH, B16DTL	215/60 R16, 225/50 R17, 235/45 R18	230/2.3 (33)	230/2.3 (33)	270/2.7 (39)[8)]	270/2.7 (39)[8)]	240/2.4 (35)	280/2.8 (41)
	235/40 R19, 215/50 R17	240/2.4 (35)	220/2.2 (32)	270/2.7 (39)	270/2.7 (39)	250/2.5 (36)	290/2.9 (42)
	205/60 R16, 205/55 R16	250/2.5 (36)	230/2.3 (33)	270/2.7 (39)	270/2.7 (39)	260/2.6 (38)	300/3.0 (43)

4-door notchback		Comfort with up to 3 people		ECO with up to 3 people		With full load	
Engine	Tyres	front	rear	front	rear	front	rear
		[kPa/bar] ([psi])	[kPa/bar] ([psi])	[kPa/bar] ([psi])	[kPa/bar] ([psi])	[kPa/bar] ([psi])	[kPa/bar] ([psi])
B16SHL	215/60 R16, 225/50 R17, 235/45 R18	230/2.3 (33)	230/2.3 (33)	270/2.7 (39)	270/2.7 (39)	240/2.4 (35)	280/2.8 (41)
	235/40 R19	240/2.4 (35)	220/2.2 (32)	270/2.7 (39)	270/2.7 (39)	250/2.5 (36)	290/2.9 (42)
	205/60 R16, 205/55 R16, 215/50 R17	250/2.5 (36)	230/2.3 (33)	270/2.7 (39)	270/2.7 (39)	260/2.6 (38)	300/3.0 (43)

4-door notchback		Comfort with up to 3 people		ECO with up to 3 people		With full load	
Engine	Tyres	front	rear	front	rear	front	rear
		[kPa/bar] ([psi])	[kPa/bar] ([psi])	[kPa/bar] ([psi])	[kPa/bar] ([psi])	[kPa/bar] ([psi])	[kPa/bar] ([psi])
A13DTE	205/60 R16, 215/50 R17, 215/60 R16	220/2.2 (32)	220/2.2 (32)	270/2.7 (39)	270/2.7 (39)	230/2.3 (33)	270/2.7 (39)
All	Temporary spare wheel T115/70 R16	420/4.2 (61)	420/4.2 (61)	–	–	420/4.2 (61)	420/4.2 (61)

8) In combination with ultra low rolling resistance tyres: 300/3.0 (43).

Customer information

Customer information **280**
Declaration of conformity 280
REACH 284
Collision damage repair 284
Software acknowledgement 284
Registered trademarks 286
Vehicle data recording and privacy **287**
Event data recorders 287
Radio Frequency Identification (RFID) 287

Customer information

Declaration of conformity

Radio transmission systems

This vehicle has systems that transmit and / or receive radio waves subject to Directive 1999/5/EC or 2014/53/EU. The manufacturers of the systems listed below declare conformity with Directive 1999/5/EC or 2014/53/EU. The full text of the EU declaration of conformity for each system is available at the following internet address: www.opel.com/conformity

Importer is
Opel / Vauxhall, Bahnhofsplatz, 65423 Ruesselsheim am Main, Germany.

Infotainment system Navi 950 / Navi 650 / CD 600
Panasonic

776 Hwy 74 South, Peachtree City GA 30269 U.S.A

Operation frequency (MHz)	Maximum output (dBm)
2402.0 - 2480.0	7.67

Infotainment system Navi CD 300 / CD 400
Panasonic

776 Hwy 74 South, Peachtree City GA 30269 U.S.A

Operation frequency (MHz)	Maximum output (dBm)
N/A	N/A

DAB+ Module
Panasonic Automotive & Industrial

Systems Europe GmbH, Robert-Bosch-Straße 27-29, 63225 Langen, Germany

Operation frequency: N/A

Maximum output: N/A

Antenna Laird
Laird

8100 Industrial Park Drive, Grand Blanc, MI, 48439 USA

Operation frequency: N/A

Maximum output: N/A

Antenna Kathrain
Kathrein Automotive GmbH

Roemerring 1, 31137 Hildesheim, Germany

Operation frequency: N/A

Maximum output: N/A

OnStar module
LGE

LG Electronics European Shared Service Center B.V., Krijgsman 1, 1186 DM Amstelveen, The Netherlands

Operation frequency (MHz)	Maximum output (dBm)
2402 - 2480	4
2412 - 2462	18
880 - 915	33
1710 - 1785	24
1850 - 1910	24
1920 - 1980	24
2500 - 2570	23

Immobiliser
Continental Automotive GmbH

Siemensstrasse 12, 93055 Regensburg, Germany

Operation frequency: 125 kHz

Maximum output:
5.1 dBuA/m @ 10m

Radio remote control receiver
Continental Automotive GmbH

Siemensstrasse 12, 93055 Regensburg, Germany

Operation frequency: 433.92 MHz

Maximum output: N/A

Radio remote control transmitter
Continental Automotive GmbH

Siemensstrasse 12, 93055 Regensburg, Germany

Operation frequency: 433.92 MHz

Maximum output: -5,7 dBm

Tyre pressure sensors
Schrader Electronics Ltd.

11 Technology Park, Belfast Road, Antrim BT41 1QS, Northern Ireland, United Kingdom

Operation frequency: 433.92 MHz

Maximum output: 10 dBm

Radar systems

Country-specific Declarations of Conformity for radar systems are shown on the following page:

European Union
EC Directive: 1999/5/EC
Manufacturer: Delphi Electronics & Safety
Model / Type Designation: L2C0038TR
Description / Intended Use:
Electronically Scanned Radar (ESR),
a 76.5GHz adaptive cruise control system
radar fitted to motor vehicles at vehicle
manufacture
Applied Standards:
47 CFR Part 15
CEPT ERC Recommendation 70-03
EN 60950
EN 301 091
European Commission Directive
2006/28/EC
I declare that the product referenced above is in compliance with the essential requirements and other relevant provisions of Directive 1999/5/EC, on the approximation of the laws of the member states relating to Directive 1999/5/EC.

Brazil

Modelo: L2C0038TR
ANATEL
1071-10-3451
01078978438002 48

Este equipamento opera em caráter secundário, isto é, não tem direito a proteção contra interferência prejudicial, mesmo de estações do mesmo tipo, e não pode causar interferência a sistemas operando em caráter primário

Indonesia
14785/POSTEL/2010
1982

Jordan
Type Approval No.: TRC/LPD/2009/87
Equipment Type: Low Power Device (LPD)

Malaysia
KELAS
CIA 1998
Approval #: B 05358

Moldova
8526

Morocco
AGREE PAR L'ANRT MAROC
Numéro d'agrément :
MR 4838 ANRT 2009
Date d'agrément : 22/5/2009

Singapore
Complies with
IDA Standards
DA105753

South Africa
ICASA
TA-2009/163
APPROVED

South Korea
방송통신위원회
인증번호 : KCC-CRI-DPH-L2C0038TR

Taiwan
CCAB09LP4590T3

UAE
TRA
REGISTERED No:
0018923/09
DEALER No:
DA0047809/10

United States of America and Canada
Model / FCC ID: L2C0038TR IC: 3432A-0038TR

This device complies with Part 15 of the FCC Rules and with Industry Canada license-exempt RSS standard(s). Operation is subject to the following two conditions: (1) This device may not cause harmful interference, and (2) This device must accept any interference received, including interference that may cause undesired operation.

Le présent appareil est conforme aux CNR d'Industrie Canada applicables aux appareils radio exempts de licence. L'exploitation est autorisée aux deux conditions suivantes: (1) l'appareil ne doit pas produire de brouillage, et (2) l'utilisateur de l'appareil doit accepter tout brouillage radioélectrique subi, même si le brouillage est susceptible d'en compromettre le fonctionnement.

Note: Changes or modifications not expressively approved by the party responsible for compliance could void the user's authority to operate the equipment. The term "IC:" before the radio certification number only signifies that Industry Canada technical specifications were met.

Note: This equipment complies with radiation exposure limits set forth for an uncontrolled environment. This equipment should be installed and operated with minimum distance of 20 cm between the radiator and your body.

Jack

Wir leben Autos.

Konformitätserklärung

nach EG Richtlinie 2006/42/EG

Hiermit erklären wir, dass das Produkt:

Produktbezeichnung: Wagenheber

Typ/GM-Teilenummern: 13576735

den Bestimmungen der Richtlinie 2006/42/EG entspricht.

Angewendete technische Normen:

GMN9737	Jacking
GM 14337	Standard Equipment Jack - Hardware Tests
GMN5127	Vehicle Integrity-Hoisting and Service Station Jacking
GMW15005	Standard Equipment Jack and Spare Tire, Vehicle Test
ISO TS 16949	Qualitätsmanagementsystem

Der Unterzeichner ist Bevollmächtigter für die Zusammenstellung der technischen Unterlagen.

Rüsselsheim, 31. Januar 2014

Hans-Peter Metzger
Engineering Group Manager Chassis & Structure
Adam Opel AG

Adam Opel AG
Bahnhofsplatz
65423 Rüsselsheim
T 0 61 42 7-70, F 0 61 42 7-7 88 00
www.opel.de

Vorstand:
Dr. Karl-Thomas Neumann (Vorsitzender),
Michael F. Ableson, Holger Kimmes,
Michael Lohscheller, Dr. Thomas Sedran,
Peter Thom, Susanna Webber, Johan Willems

Aufsichtsrat:
Stephen J. Ginky (Vorsitzender)

Sitz der Gesellschaft: Rüsselsheim
Handelsregister:
Amtsgericht Darmstadt, HRB 89158

Ein Unternehmen der GM Gruppe

Translation of the original declaration of conformity

Declaration of conformity according to EC Directive 2006/42/EC

We declare that the product:

Product designation: Jack

Type/GM part number: 13576735

is in compliance with the provisions of Directive 2006/42/EC.

Applied technical standards:

GMN9737	:	jacking
GM 14337	:	standard equipment jack – hardware tests
GMN5127	:	vehicle integrity – hoisting and service station jacking
GMW15005	:	standard equipment jack and spare tyre, vehicle test
ISO TS 16949	:	quality management systems

The signatory is authorised to compile the technical documentation.

Rüsselsheim, 31st January 2014

signed by

Hans-Peter Metzger

Engineering Group Manager Chassis & Structure

Adam Opel AG

D-65423 Rüsselsheim

REACH

Registration, Evaluation, Authorisation and Restriction of Chemicals (REACH) is a European Union regulation adopted to improve the protection of human health and the environment from the risks that can be posed by chemicals. Visit www.opel.com/reach for further information and for access to the Article 33 communication.

Collision damage repair

Paint thickness

Due to production techniques, the thickness of the paint can vary between 50 and 400 µm.

Therefore, different paint thickness is no indicator for a collision damage repair.

Software acknowledgement

Certain OnStar components include libcurl and unzip software and other third party software. Below are the notices and licenses associated with libcurl and unzip and for other third party software please see http://www.lg.com/global/support/opensource/index.

libcurl

Copyright and permission notice

Copyright (c) 1996 - 2010, Daniel Stenberg, <daniel@haxx.se>.

All rights reserved.

Permission to use, copy, modify, and distribute this software for any purpose with or without fee is hereby granted, provided that the above copyright notice and this permission notice appear in all copies.

The software is provided "as is", without warranty of any kind, express or implied, including but not limited to the warranties of merchantability, fitness for a particular purpose and noninfringement of third party rights. In no event shall the authors or copyright holders be liable for any claim, damages or other liability, whether in an action of contract, tort or otherwise, arising from, out of or in connection with the software or the use or other dealings in the software.

Except as contained in this notice, the name of a copyright holder shall not be used in advertising or otherwise to promote the sale, use or other dealings in this Software without prior written authorization of the copyright holder.

unzip

This is version 2005-Feb-10 of the Info-ZIP copyright and license. The definitive version of this document should be available at ftp://ftp.info-zip.org/pub/infozip/license.html indefinitely.

Copyright (c) 1990-2005 Info-ZIP. All rights reserved.

For the purposes of this copyright and license, “Info-ZIP” is defined as the following set of individuals:

Mark Adler, John Bush, Karl Davis, Harald Denker, Jean-Michel Dubois, Jean-loup Gailly, Hunter Goatley, Ed Gordon, Ian Gorman, Chris Herborth, Dirk Haase, Greg Hartwig, Robert Heath, Jonathan Hudson, Paul Kienitz, David Kirschbaum, Johnny Lee, Onno van der Linden, Igor Mandrichenko, Steve P. Miller, Sergio Monesi, Keith Owens, George Petrov, Greg Roelofs, Kai Uwe Rommel, Steve Salisbury, Dave Smith, Steven M. Schweda, Christian Spieler, Cosmin Truta, Antoine Verheijen, Paul von Behren, Rich Wales, Mike White.

This software is provided “as is,” without warranty of any kind, express or implied. In no event shall Info-ZIP or its contributors be held liable for any direct, indirect, incidental, special or consequential damages arising out of the use of or inability to use this software.

Permission is granted to anyone to use this software for any purpose, including commercial applications, and to alter it and redistribute it freely, subject to the following restrictions:

1. Redistributions of source code must retain the above copyright notice, definition, disclaimer, and this list of conditions.
2. Redistributions in binary form (compiled executables) must reproduce the above copyright notice, definition, disclaimer, and this list of conditions in documentation and/or other materials provided with the distribution. The sole exception to this condition is redistribution of a standard UnZipSFX binary (including SFXWiz) as part of a self-extracting archive; that is

permitted without inclusion of this license, as long as the normal SFX banner has not been removed from the binary or disabled.

3. Altered versions--including, but not limited to, ports to new operating systems, existing ports with new graphical interfaces, and dynamic, shared, or static library versions--must be plainly marked as such and must not be misrepresented as being the original source. Such altered versions also must not be misrepresented as being Info-ZIP releases--including, but not limited to, labeling of the altered versions with the names “Info-ZIP” (or any variation thereof, including, but not limited to, different capitalizations), “Pocket UnZip,” “WiZ” or “MacZip” without the explicit permission of Info-ZIP. Such altered versions are further prohibited from misrepresentative use of the Zip-Bugs or Info-ZIP e-mail addresses or of the Info-ZIP URL(s).
4. Info-ZIP retains the right to use the names “Info-ZIP,” “Zip,” “UnZip,” “UnZipSFX,” “WiZ,” “Pocket UnZip,” “Pocket Zip,” and “MacZip” for its own source and binary releases.

Registered trademarks

Apple Inc.
Apple CarPlay™ is a trademark of Apple Inc.

App Store® and iTunes Store® are registered trademarks of Apple Inc.

iPhone®, iPod®, iPod touch®, iPod nano®, iPad® and Siri® are registered trademarks of Apple Inc.

Bluetooth SIG, Inc.
Bluetooth® is a registered trademark of Bluetooth SIG, Inc.

DivX, LLC
DivX® and DivX Certified® are registered trademarks of DivX, LLC.

EnGIS Technologies, Inc.
BringGo® is a registered trademark of EnGIS Technologies, Inc.

Google Inc.
Android™ and Google Play™ Store are trademarks of Google Inc.

Stitcher Inc.
Stitcher™ is a trademark of Stitcher, Inc.

Verband der Automobilindustrie e.V.
AdBlue® is a registered trademark of the VDA.

Vehicle data recording and privacy

Event data recorders

Data storage modules in the vehicle

A large number of electronic components of your vehicle contain data storage modules temporarily or permanently storing technical data about the condition of the vehicle, events and errors. In general, this technical information documents the condition of parts, modules, systems or the environment:

- operating conditions of system components (e.g. filling levels)
- status messages of the vehicle and its single components (e.g. number of wheel revolutions / rotational speed, deceleration, lateral acceleration)
- dysfunctions and defects in important system components
- vehicle reactions in particular driving situations (e.g. inflation of an airbag, activation of the stability regulation system)
- environmental conditions (e.g. temperature)

These data are exclusively technical and help identifying and correcting errors as well as optimising vehicle functions.

Motion profiles indicating travelled routes cannot be created with these data.

If services are used (e.g. repair works, service processes, warranty cases, quality assurance), employees of the service network (manufacturer included) are able to read out this technical information from the event and error data storage modules applying special diagnostic devices. If required, you will receive further information at these workshops. After an error has been corrected, the data are deleted from the error storage module or they are constantly overwritten.

When using the vehicle, situations may occur in which these technical data related to other information (accident report, damages on the vehicle, witness statements etc.) may be associated with a specific person - possibly, with the assistance of an expert.

Additional functions contractually agreed upon with the client (e.g. vehicle location in emergency cases) allow the transmission of particular vehicle data from the vehicle.

Radio Frequency Identification (RFID)

RFID technology is used in some vehicles for functions such as tyre pressure monitoring and ignition system security. It is also used in connection with conveniences such as radio remote controls for door locking/unlocking and starting, and in-vehicle transmitters for garage door openers. RFID technology in Opel vehicles does not use or record personal information or link with any other Opel system containing personal information.

Index

A

Accessories and vehicle modifications 200
Active Emergency Braking..... 173
Active head restraints..... 40
Adaptive cruise control..... 92, 162
Adaptive forward lighting 92, 120, 211
Adjustable air vents 137
Airbag and belt tensioners 87
Airbag deactivation 54, 87
Airbag system 51
Air conditioning regular operation 138
Air conditioning system 130
Air intake 137
Air vents..... 137
Antilock brake system 152
Antilock brake system (ABS) 89
Anti-theft alarm system 29
Anti-theft locking system 29
Appearance care..... 249
Armrest..... 47, 48
Armrest storage 62
Ashtrays 79
Automatic anti-dazzle 33
Automatic light control 117
Automatic locking 26
Automatic transmission 147
Autostop..... 142
Auxiliary heater..... 136

B

Battery discharge protection 128
Battery voltage 102
Belts..... 48
Bonnet 201
Brake and clutch fluid..... 254
Brake and clutch system 88
Brake assist 154
Brake fluid 205
Brakes 152, 205
Breakdown..... 247
Bulb replacement 208

C

Capacities 270
Car Pass 23
Catalytic converter 147
Central locking system 24
Centre console lighting 127
Centre console storage 63
Changing tyre and wheel size ... 234
Charging system 88
Child locks 26
Child restraint installation locations 57
Child restraints..... 55
Child restraint systems 55
Cigarette lighter 79

Climate control 17
Climate control systems..... 129
Clock..... 77
Code..... 99
Collision damage repair..... 284
Control indicators..... 84
Control of the vehicle 140
Controls..... 73
Convex shape 31
Coolant and antifreeze..... 254
Cruise control 92, 159
Cupholders 60
Curtain airbag system 53
Curve lighting..... 120

D

Danger, Warnings and Cautions ... 4
Daytime running lights 120
Declaration of conformity..... 280
Diesel fuel system bleeding 207
Diesel particle filter..... 90, 146
Door open 93
Doors..... 27
Driver assistance systems..... 159
Driver Information Centre..... 93
Driving characteristics and towing tips 194
Driving hints..... 140

E

Electric adjustment 31
Electrical system..... 222
Electric parking brake..... 88, 153
Electric parking brake fault..... 89
Electronic climate control system 132
Electronic driving programmes .. 149
Electronic Stability Control..... 155
Electronic Stability Control and Traction Control system..... 90
Electronic Stability Control off..... 90
End-of-life vehicle recovery 201
Engine compartment fuse box ... 223
Engine coolant 203
Engine coolant temperature gauge 83
Engine data 262
Engine exhaust 145
Engine identification..... 258
Engine oil 202, 254, 259
Engine oil pressure 91
Entry lighting 127
ERA GLONASS..... 113
Event data recorders..... 287
Exit lighting 127
Exterior care 249
Exterior light 92
Exterior lighting 15, 116
Exterior mirrors..... 31

F

Fault 150
First aid..... 69
First aid kit 69
Fixed air vents 137
Fog light 92
Fog lights 212
Folding mirrors 32
Following distance indication..... 172
Forward collision alert..... 169
Front airbag system 52
Front fog lights 124
Front seats..... 41
Front storage..... 61
Front turn signal lights 214
Fuel..... 188
Fuel consumption - CO_2-Emissions 193
Fuel for diesel engines 189
Fuel for liquid gas operation..... 190
Fuel for petrol engines 188
Fuel gauge 81
Fuel selector 81
Fuses 222

G

Gauges..... 80
General information 194
Glass panel 38

Glovebox 60
Graphic-Info-Display, Colour-Info-Display 97

H
Halogen headlights 208
Hand brake..... 152, 153
Hazard warning flashers 123
Headlight flash 118
Headlight range adjustment 119
Headlights..... 116
Headlights when driving abroad 119
Head restraint adjustment 8
Head restraints 39
Heated mirrors 32
Heated rear window 36
Heated steering wheel 73
Heating 47
Heating and ventilation system . 129
Height adjustable rear floor cover 67
High beam 92, 118
High beam assist..... 92, 118
Hill start assist 154
Horn 16, 74

I
Identification plate 257
Ignition switch positions 141
Immobiliser 31, 92
Indicators..... 80
Information displays..... 93
Instrument cluster 80
Instrument panel fuse box 225
Instrument panel illumination 221
Instrument panel illumination control 125
Instrument panel overview 11
Interactive driving system..... 157
Interior care 252
Interior lighting..... 125
Interior lights 125, 221
Interior mirrors..... 33
Interruption of power supply 150
Introduction 3

J
Jump starting 246

K
Key, memorised settings..... 24
Keys 22
Keys, locks..... 22

L
Lane departure warning..... 89, 187
Lashing eyes 68
Lighting features..... 127
Light switch 116
Load compartment 27, 64
Load compartment cover 66
Load compartment fuse box 226
Loading information 70
Low fuel 91
Low washer fluid 92
LPG..... 81, 190, 259

M
Malfunction indicator light 88
Manual anti-dazzle 33
Manual mode 149
Manual seat adjustment..... 42
Manual transmission 151
Manual windows 34
Memorised settings..... 24
Midlevel-Display..... 93
Mirror adjustment 9
Misted light covers 125

N
New vehicle running-in 140
Number plate light 221

O
Object detection systems..... 175
Odometer 80
Oil, engine..... 254, 259
OnStar..... 110
Operate pedal..... 88
Outside temperature 76
Overrun cut-off 142

P

Parking 20, 144
Parking assist 175
Parking brake 153
Parking lights 124
Particulate filter..... 146
Performance 265
Performing work 201
Pollen filter 137
Power outlets 78
Power seat adjustment 45
Power steering..... 89
Power steering fluid..... 204
Power windows 34
Preheating 90
Puncture..... 238

Q

Quickheat..... 136

R

Radio Frequency Identification (RFID)..... 287
Radio remote control 23
REACH..... 284
Reading lights 126
Rear floor storage cover 67
Rear fog light 92
Rear fog lights 124
Rear seats..... 48
Rear storage..... 66
Rear window wiper/washer 76
Recommended fluids and lubricants 254, 259
Reduced engine power..... 92
Refuelling 190
Registered trademarks..... 286
Retained power off..... 141
Reversing lights 125
Ride control systems..... 155
Roof..... 36
Roof load..... 70
Roof rack 70

S

Safety belts..... 48
Seat adjustment 7
Seat belt 9
Seat belt reminder 87
Seat belts 48
Seat folding 44
Seat heating..... 47
Seat position 41
Selector lever 148
Service 138, 253
Service display 83
Service information 253
Service vehicle soon 88
Side airbag system 52
Side blind spot alert..... 182
Sidelights..... 116
Side turn signal lights 219
Smartphone controller..... 99
Software acknowledgement..... 284
Spare wheel 242
Speed limiter..... 161
Speedometer 80
Starting and operating..... 140
Starting off 19
Starting the engine 141
Steering..... 140
Steering wheel adjustment 10, 73
Steering wheel controls 73
Stop-start system..... 142
Storage..... 60
Storage compartments..... 60
Sunroof 36
Sunvisor lights 126
Sun visors 36
Symbols 4

T

Tachometer 80
Tail lights 216
Three-point seat belt 49
Tools 227
Tow bar..... 194
Towing..... 194, 247
Towing another vehicle 248
Towing equipment 195
Towing the vehicle 247

Traction Control system 155
Traction Control system off..... 90
Traffic sign assistant..... 183
Trailer coupling..... 194
Trailer stability assist 198
Trailer towing 195
Transmission 19
Transmission display 147
Tread depth 234
Trip computer 103
Trip odometer 80
Turn and lane-change signals ... 123
Turn signal 87
Tyre chains 235
Tyre designations 229
Tyre pressure 229
Tyre pressure monitoring system..... 91, 231
Tyre pressures 271
Tyre repair kit 235

U

Ultrasonic parking assist 90, 175
Underseat storage 62
Upholstery..... 252
Uplevel-Combi-Display..... 93
Upshift..... 89
Using this manual 3

V

Vehicle battery 205
Vehicle checks..... 201
Vehicle data..... 259
Vehicle data recording and privacy..... 287
Vehicle detected ahead..... 93
Vehicle dimensions 269
Vehicle Identification Number 257
Vehicle jack..... 227
Vehicle messages 99
Vehicle personalisation 105
Vehicle security..... 29
Vehicle specific data 3
Vehicle storage..... 200
Vehicle tools..... 227
Vehicle unlocking 6
Vehicle weight 267
Ventilation..... 129

W

Warning chimes 102
Warning lights..... 80
Warning triangle 69
Washer and wiper systems 17
Washer fluid 204
Wheel changing 238
Wheel covers 235
Wheels and tyres 229
Windows..... 33
Windscreen..... 33
Windscreen wiper/washer 74
Winter tyres 229
Wiper blade replacement 207

www.opel.com

Copyright by ADAM OPEL GmbH, Rüsselsheim, Germany.

The information contained in this publication is effective as of the date indicated below. Adam Opel GmbH reserves the right to make changes to the technical specifications, features and design of the vehicles relative to the information in this publication as well as changes to the publication itself.

Edition: August 2017, ADAM OPEL GmbH, Rüsselsheim.

Printed on chlorine-free bleached paper.

ID-OASJOBSE1708-en