2014 Chevrolet Caprice Police Patrol Vehicle

In Brief 1-1
Instrument Panel 1-2
Initial Drive Information 1-4
Vehicle Features 1-12
Performance and Maintenance 1-14

Keys, Doors, and Windows 2-1
Keys and Locks 2-1
Doors 2-9
Vehicle Security 2-10
Exterior Mirrors 2-12
Interior Mirrors 2-13
Windows 2-14

Seats and Restraints 3-1
Head Restraints 3-2
Front Seats 3-3
Safety Belts 3-5
Airbag System 3-12
Child Restraints 3-36

Storage 4-1
Storage Compartments 4-1

Instruments and Controls 5-1
Controls 5-2
Warning Lights, Gauges, and Indicators 5-5
Information Displays 5-18
Vehicle Messages 5-21
Vehicle Personalization 5-26

Lighting 6-1
Exterior Lighting 6-1
Interior Lighting 6-4
Lighting Features 6-5

Infotainment System 7-1
Introduction 7-1
Radio 7-11
Audio Players 7-20
Voice Recognition 7-25
Phone 7-28
Trademarks and License Agreements 7-35

Climate Controls 8-1
Climate Control Systems 8-1
Air Vents 8-5
Maintenance 8-6

Driving and Operating 9-1
Driving Information 9-2
Starting and Operating 9-13
Engine Exhaust 9-19
Automatic Transmission 9-20
Brakes 9-23
Ride Control Systems 9-25
Cruise Control 9-27
Fuel 9-30
Towing 9-35
Conversions and Add-Ons ... 9-35

Vehicle Care 10-1
General Information 10-2
Vehicle Checks 10-3
Headlamp Aiming 10-26
Bulb Replacement 10-27
Electrical System 10-31

2014 Chevrolet Caprice Police Patrol Vehicle

Wheels and Tires 10-40
Jump Starting 10-69
Towing 10-72
Appearance Care 10-73

Service and Maintenance . . . 11-1
General Information 11-1
Maintenance Schedule 11-2
Special Application Services 11-6
Additional Maintenance and Care 11-6
Recommended Fluids 11-9
Maintenance Records 11-11

Technical Data 12-1
Vehicle Identification 12-1
Vehicle Data 12-2

Customer Information 13-1
Customer Information 13-1
Reporting Safety Defects 13-10
Vehicle Data Recording and Privacy 13-11

Special Equipment Options 15-1
SEO Standard Options 15-1
SEO Available Options 15-6

Index i-1

The names, logos, emblems, slogans, vehicle model names, and vehicle body designs appearing in this manual including, but not limited to, GM, the GM logo, CHEVROLET, the CHEVROLET Emblem, and CAPRICE are trademarks and/or service marks of General Motors LLC, its subsidiaries, affiliates, or licensors.

This manual describes features that may or may not be on your specific vehicle either because they are options that you did not purchase or due to changes subsequent to the printing of this owner manual.

Please refer to the purchase documentation relating to your specific vehicle to confirm each of the features found on your vehicle.

Keep this manual in the vehicle for quick reference.

Using this Manual

To quickly locate information about the vehicle, use the Index in the back of the manual. It is an alphabetical list of what is in the manual and the page number where it can be found.

Danger, Warnings, and Cautions

⚠ Danger

Text marked ⚠ Danger provides information on risk of fatal injury. Disregarding this information may endanger life.

⚠ Warning

Text marked ⚠ Warning provides information on risk of accident or injury. Disregarding this information may lead to injury.

Litho in U.S.A.
Part No. 22922169 A First Printing

©2013 General Motors LLC. All Rights Reserved.

⚠ Caution

Text marked ⚠ Caution provides information that may indicate a hazard that could result in injury or death. It could also result in possible damage to the vehicle.

A circle with a slash through it is a safety symbol which means “Do Not,” “Do not do this,” or “Do not let this happen.”

Symbols

The vehicle has components and labels that use symbols instead of text. Symbols are shown along with the text describing the operation or information relating to a specific component, control, message, gauge, or indicator.

: This symbol is shown when you need to see your owner manual for additional instructions or information.

: This symbol is shown when you need to see a service manual for additional instructions or information.

Vehicle Symbol Chart

Here are some additional symbols that may be found on the vehicle and what they mean. For more information on the symbol, refer to the Index.

: Airbag Readiness Light

: Air Conditioning

: Antilock Brake System (ABS)

: Steering Wheel Controls

: Brake System Warning Light

: Charging System

: Cruise Control

: Engine Coolant Temperature

: Exterior Lamps

: Fuel Gauge

: Fuses

: Headlamp High/Low-Beam Changer

: LATCH System Child Restraints

: Malfunction Indicator Lamp

: Power On/Off

: Remote Vehicle Start

: Safety Belt Reminders

: Tire Pressure Monitor

: Traction Control/StabiliTrak®

: Windshield Washer Fluid

In Brief

Instrument Panel
Instrument Panel Overview 1-2

Initial Drive Information
Initial Drive Information 1-4
Remote Keyless Entry (RKE) System 1-4
Remote Vehicle Start 1-5
Door Locks 1-5
Windows 1-6
Seat Adjustment 1-6
Head Restraint Adjustment 1-7
Safety Belts 1-8
Passenger Sensing System ... 1-8
Mirror Adjustment 1-8
Steering Wheel Adjustment ... 1-9
Interior Lighting 1-9
Exterior Lighting 1-10
Windshield Wiper/Washer 1-10
Climate Controls 1-11
Transmission 1-12

Vehicle Features
Steering Wheel Controls 1-12
Cruise Control 1-13
Driver Information Center (DIC) 1-13
Power Outlets 1-13

Performance and Maintenance
Traction Control/Electronic Stability Control 1-14
Tire Pressure Monitor 1-14
Engine Oil Life System 1-15
E85 or FlexFuel 1-15
Driving for Better Fuel Economy 1-15
Battery 1-16
Roadside Assistance Program 1-16

Instrument Panel

Instrument Panel Overview

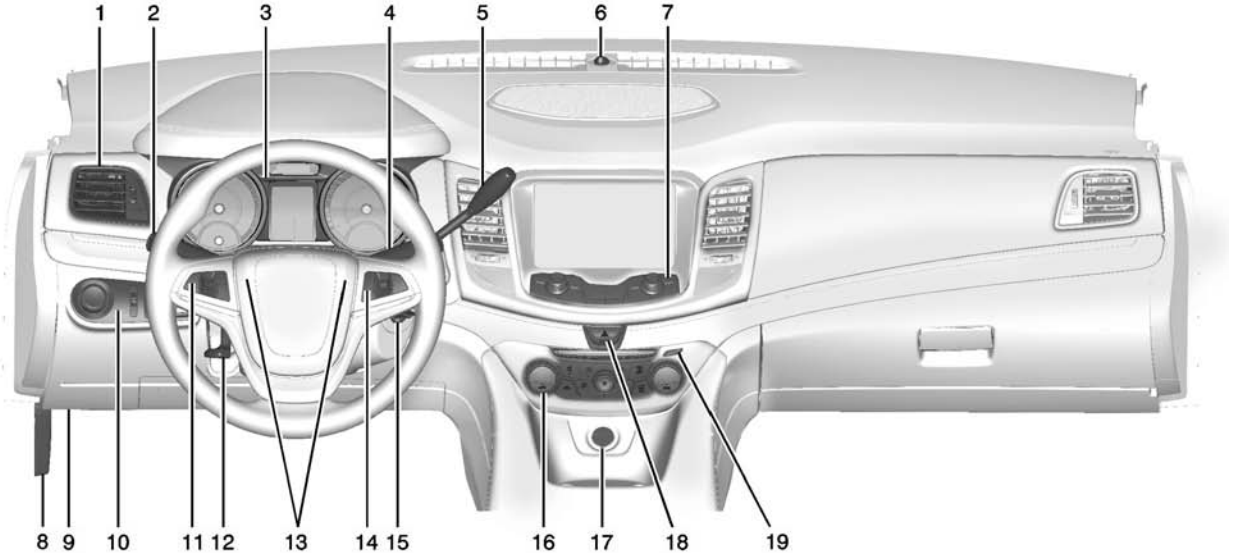

1. *Air Vents on page 8-5*.
2. Turn Signal Lever. See *Turn and Lane-Change Signals on page 6-3*.
3. *Instrument Cluster on page 5-6*.
4. *Windshield Wiper/Washer on page 5-3*.
5. Shift Lever. See *Automatic Transmission on page 9-20*.
6. Solar Sensor. See *Dual Automatic Climate Control System on page 8-1*.
7. Infotainment. See *Overview on page 7-2*.
8. Hood Release. See *Hood on page 10-4*.
9. Data Link Connector (DLC) (Out of View). See *Malfunction Indicator Lamp on page 5-10*.
10. *Exterior Lamp Controls on page 6-1*.

    Instrument Panel Illumination Control on page 6-4.

    Traction Control/Electronic Stability Control on page 9-25.

    Sport Shift Button. See *Automatic Transmission on page 9-20*.
11. *Cruise Control on page 9-27*.
12. *Steering Wheel Adjustment on page 5-2*.
13. *Horn on page 5-2*.
14. *Steering Wheel Controls on page 5-2*.
15. Ignition. See *Ignition Positions on page 9-14*.
16. *Dual Automatic Climate Control System on page 8-1*.
17. *Power Outlets on page 5-4*.
18. *Hazard Warning Flashers on page 6-3*.
19. CD Player Eject Button. See *CD Player on page 7-20*.

Initial Drive Information

This section provides a brief overview about some of the important features that may or may not be on your specific vehicle.

For more detailed information, refer to each of the features which can be found later in this owner manual.

Remote Keyless Entry (RKE) System

The RKE transmitter may work up to 60 m (197 ft) away from the vehicle.

The RKE transmitter can have one of the two symbols for the remote trunk release.

Press this button to extend the key. The key can be used for the ignition and all locks.

: Press to unlock the driver door or all doors.

: Press to lock all doors.

Lock and unlock feedback can be personalized.

or HOLD : Press and hold until the trunk begins to move.

: Vehicle locator and panic alarm disabled.

: Press and release and then immediately press and hold for at least four seconds to start the engine from outside the vehicle.

See *Keys on page 2-1* and *Remote Keyless Entry (RKE) System Operation on page 2-3*.

Remote Vehicle Start

With this feature the engine can be started from outside the vehicle.

Starting the Vehicle

1. Aim the RKE transmitter at the vehicle.
2. Press and release 🔒.
3. Immediately after completing Step 2, press and hold 🔒 for at least four seconds or until the turn signal lamps flash.

When the engine starts, the parking lamps will turn on and remain on as long as the engine is running. The doors will be locked and the climate control system may come on.

The engine will continue to run for 10 minutes. Repeat the steps for a 10-minute time extension. Remote start can be extended only once.

Canceling a Remote Start

To cancel a remote start, do one of the following:

- Aim the RKE transmitter at the vehicle and press and hold 🔒 until the parking lamps turn off.
- Turn on the hazard warning flashers.
- Turn the vehicle on and then off.

See *Remote Vehicle Start on page 2-5*.

Door Locks

To lock or unlock the doors from the outside:

- Press 🔒 or 🔓 on the Remote Keyless Entry (RKE) transmitter. See *Remote Keyless Entry (RKE) System Operation on page 2-3*.
- Use the key in the driver door to unlock it.

To lock or unlock the doors from the inside:

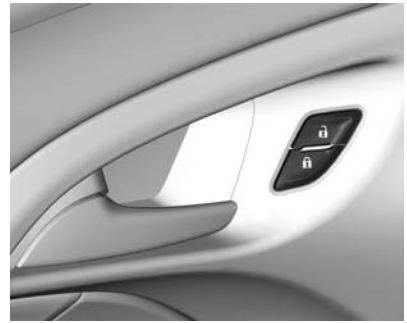

- Press 🔒 or 🔓.
- Push the door lock knob on the top of the door to lock.
- Pull the door handle once to unlock the door. Pulling the handle again unlatches the door.

See *Door Locks on page 2-6* or *Power Door Locks on page 2-8*.

Windows

Press the switch down to open the window. Pull the switch up to close it.

The power windows only operate with the ignition in ACC/ACCESSORY or ON/RUN/START, or when Retained Accessory Power (RAP) is active. See *Retained Accessory Power (RAP) on page 9-17*.

Express Window Operation

Windows with an express-down feature allow the window to be lowered without holding the switch. Press the switch down all the way, release it, and the window will go down automatically. Stop the window by pressing or pulling the switch a second time.

See *Power Windows on page 2-14*.

Seat Adjustment

Front Seats

To adjust a manual seat:

1. Pull the handle at the front of the seat.
2. Slide the seat to the desired position and release the handle.
3. Try to move the seat back and forth to be sure it is locked in place.

Height Adjuster

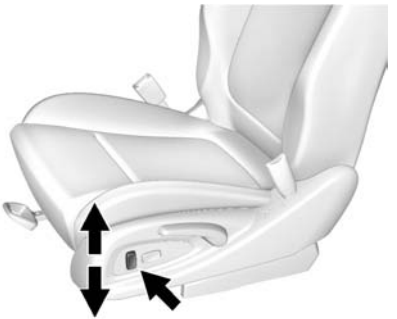

Press and hold the top or bottom of the switch to raise or lower the seat. Release the switch when the desired height is reached.

See *Seat Adjustment on page 3-3*.

Lumbar Adjustment

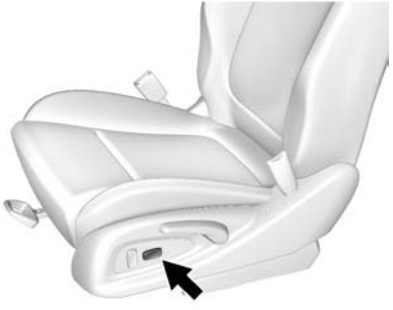

Press and hold the front or rear of the control to increase or decrease lumbar support. Release the control when the seatback reaches the desired level of lumbar support.

See *Lumbar Adjustment on page 3-4*.

Reclining Seatbacks

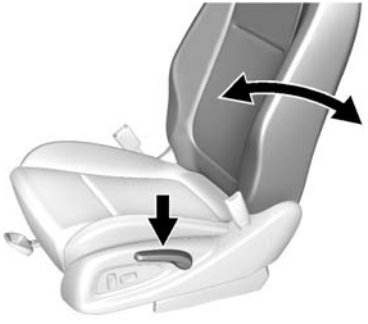

To recline the seatback:

1. Lift the lever.
2. Move the seatback to the desired position, then release the lever to lock the seatback in place.
3. Push and pull on the seatback to make sure it is locked.

To return the seatback to an upright position:

1. Lift the lever fully without applying pressure to the seatback, and the seatback returns to the upright position.
2. Push and pull on the seatback to make sure it is locked.

See *Reclining Seatbacks on page 3-4*.

Head Restraint Adjustment

Do not drive until the head restraints for all occupants are installed and adjusted properly.

To achieve a comfortable seating position, change the seatback recline angle as little as necessary while keeping the seat and the head restraint height in the proper position.

See *Head Restraints on page 3-2* and *Seat Adjustment on page 3-3*.

Safety Belts

Refer to the following sections for important information on how to use safety belts properly.

- *Safety Belts on page 3-5*.
- *How to Wear Safety Belts Properly on page 3-7*.
- *Lap-Shoulder Belt on page 3-7*.
- *Lower Anchors and Tethers for Children (LATCH System) on page 3-43*.

Passenger Sensing System

The passenger sensing system will turn off the front outboard passenger frontal airbag and knee airbag under certain conditions. No other airbag is affected by the passenger sensing system. See *Passenger Sensing System on page 3-30*.

The passenger airbag status indicator lights on the overhead console are visible when the vehicle is started. See *Passenger Airbag Status Indicator on page 5-9*.

Mirror Adjustment

Manual Rearview Mirror

Adjust the rearview mirror to view the area behind the vehicle.

Push the tab forward for daytime use and pull it for nighttime use to reduce glare.

Exterior Mirrors

To adjust the mirrors:

1. With the ignition on, press the switch (2) to select the left or right mirror.

2. Press the arrows (1) to adjust the mirror.
3. Adjust the mirror to see a little of the vehicle, and the area behind the vehicle.

Keep the switch (2) in the center when not adjusting the mirrors.

Folding Mirrors

Manually fold the mirrors inward to prevent damage when going through an automatic car wash. To fold, push the mirror toward the vehicle. Push the mirror outward to return it to its original position.

Steering Wheel Adjustment

To adjust the steering wheel:

1. Pull the lever down.
2. Move the steering wheel up or down and in or out for a comfortable position.
3. Pull the lever up to lock the steering wheel in place.

Do not adjust the tilt and telescope lever while driving.

Interior Lighting

Dome Lamps

The dome lamp controls are on the front overhead console.

: Press to turn the lamp off.

: Press to turn the lamp on.

: Press to automatically turn on the lamps when a door is opened, the vehicle is unlocked, or the ignition is turned off.

For more information on interior lamps, see:

- *Dome Lamps on page 6-4*
- *Instrument Panel Illumination Control on page 6-4*
- *Auxiliary Dome Lamp - SEO 6C7 on page 15-8* (If Equipped).

Exterior Lighting

The exterior lamp control is on the instrument panel to the left of the steering wheel.

⏻ **:** Briefly turn to this position to turn the automatic light control off or on again.

AUTO: Automatic operation of the headlamps at normal brightness and other exterior lamps.

: Turns on the parking lamps including all lamps, except the headlamps.

: Turns on the headlamps together with the parking lamps.

See:

- *Exterior Lamp Controls on page 6-1*
- *Daytime Running Lamps (DRL) on page 6-2*

Windshield Wiper/Washer

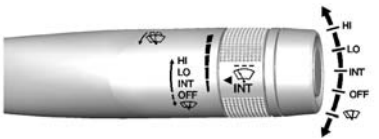

With the ignition in ACC/ACCESSORY or ON/RUN/START, move the lever to select the wiper speed.

HI: Use for fast wipes.

LO: Use for slow wipes.

INT: Move the lever up to INT for intermittent wipes, then turn the INT band up for more frequent wipes or down for less frequent wipes.

OFF: Use to turn the wipers off.

: For a single wipe, briefly move the lever down. For several wipes, hold the lever down.

: Pull the lever toward you to spray windshield washer fluid and activate the wipers.

See *Windshield Wiper/Washer on page 5-3*.

Climate Controls

The heating, cooling, and ventilation for the vehicle can be controlled with this system.

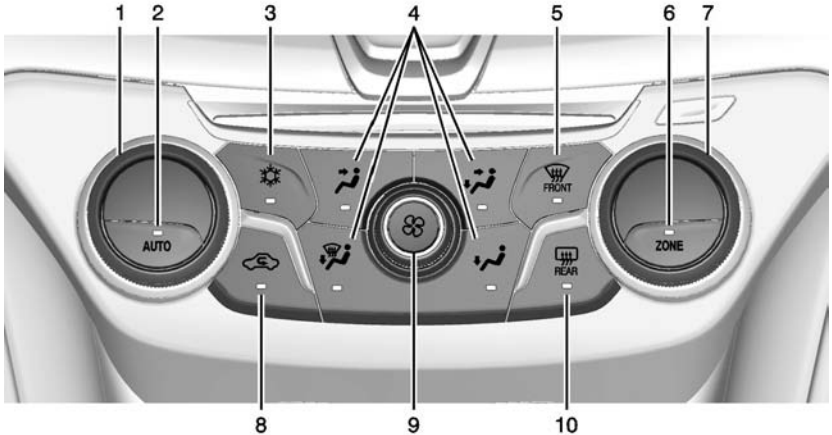

1. Driver Temperature Control
2. AUTO (Automatic Operation)
3. Air Conditioning
4. Air Delivery Mode Controls
5. Front Defrost
6. ZONE
7. Passenger Temperature Control
8. Recirculation
9. Fan Control
10. Rear Window Defogger

See *Dual Automatic Climate Control System on page 8-1*.

Transmission

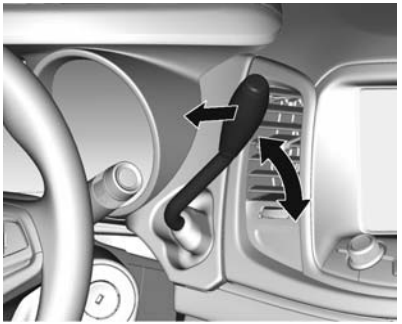

P (Park)

R (Reverse)

N (Neutral)

D (Drive)

L (Low)

Ⓢ Press the button on the left side of the instrument panel for Sport Shift mode.

See *Automatic Transmission on page 9-20*.

Vehicle Features

Steering Wheel Controls

Some audio functions can be controlled through the steering wheel controls.

/ : Press to interact with Bluetooth or voice recognition. See *Bluetooth on page 7-28* or *Voice Recognition on page 7-25*.

/ : Press to decline an incoming call, or to end a current call. Press to silence the vehicle speakers while using the infotainment system. Press again to turn the sound on. Press to cancel voice recognition.

△ SRC ▽ : Press to select an audio source.

Use the thumbwheel to select the next or previous favorite radio station, CD track, MP3 track, and Bluetooth Audio track.

+ − : Press + to increase the volume. Press − to decrease.

See *Steering Wheel Controls on page 5-2*.

Cruise Control

: Press to turn the cruise control system on and off.

: Press to disengage cruise control without erasing the set speed from memory.

RES/+: Move the thumbwheel up briefly to make the vehicle resume to a previously set speed or hold upwards to accelerate. If cruise control is already active, use to increase vehicle speed.

SET/−: Move the thumbwheel down briefly to set the speed and activate cruise control. If cruise control is already active, use to decrease speed.

See *Cruise Control on page 9-27*.

Driver Information Center (DIC)

The DIC display is in the center of the instrument cluster. It shows the status of many vehicle systems. The controls for the DIC are on the turn signal lever.

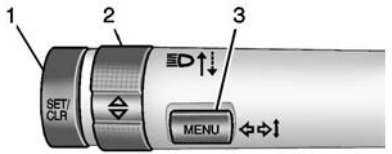

1. **SET/CLR:** Press to set, or press and hold to clear, the menu item displayed.
2. **:** Use the band to scroll through the items in each menu.
3. **MENU:** Press to display the DIC menus. This button is also used to return to or exit the last screen displayed on the DIC.

See *Driver Information Center (DIC) on page 5-18*.

Power Outlets

The accessory power outlet can be used to plug in electrical equipment, such as a cell phone or MP3 player.

The vehicle has an accessory power outlet on the center stack under the climate controls.

To use the outlet, the ignition must be in ON/RUN or ACC/ ACCESSORY. Remove the cover to access the outlet and replace when not in use.

See *Power Outlets on page 5-4*.

Performance and Maintenance

Traction Control/ Electronic Stability Control

The traction control system limits wheel spin. The system turns on automatically every time the vehicle is started.

The Performance mode allows increased performance while accelerating and/or cornering. The Performance mode is turned on by pressing and releasing the TCS/ StabiliTrak button.

The StabiliTrak system assists with directional control of the vehicle in difficult driving conditions. The system turns on automatically every time the vehicle is started.

- To enter the Performance mode, momentarily press and release the TCS/StabiliTrak button on the instrument panel. illuminates in the instrument cluster.
- Press and release the TCS/ StabiliTrak button again to turn off the Performance mode.
- To turn off both traction control and StabiliTrak, press and hold the TCS/StabiliTrak button on the instrument panel, until and illuminate in the instrument cluster.
- Press and release the TCS/ StabiliTrak button again to turn on both systems.

See *Traction Control/Electronic Stability Control on page 9-25*.

Tire Pressure Monitor

This vehicle may have a Tire Pressure Monitor System (TPMS).

The low tire pressure warning light alerts to a significant loss in pressure of one of the vehicle's tires. If the warning light comes on, stop as soon as possible and inflate the tires to the recommended pressure shown on the Tire and Loading Information label. See *Vehicle Load Limits on page 9-9*. The warning light will remain on until the tire pressure is corrected.

The low tire pressure warning light may come on in cool weather when the vehicle is first started, and then turn off as the vehicle is driven. This may be an early indicator that the tire pressures are getting low and the tires need to be inflated to the proper pressure.

The TPMS does not replace normal monthly tire maintenance. Maintain the correct tire pressures.

See *Tire Pressure Monitor System on page 10-49*.

Engine Oil Life System

The engine oil life system calculates engine oil life based on vehicle use and displays the CHANGE ENGINE OIL SOON message when it is time to change the engine oil and filter. The oil life system should be reset to 100% only following an oil change.

Resetting the Oil Life System

1. Display the REMAINING OIL LIFE on the DIC. See *Driver Information Center (DIC) on page 5-18*.
2. Press and hold the SET/CLR button on the DIC while the Oil Life display is active. The oil life will change to 100%.

The oil life system can also be reset as follows:

1. Turn the ignition to ON/RUN with the engine off.
2. Fully press and release the accelerator pedal three times within five seconds.

See *Engine Oil Life System on page 10-11*.

E85 or FlexFuel

Vehicles with a yellow fuel cap can use either unleaded gasoline or ethanol fuel containing up to 85% ethanol (E85). See *E85 or FlexFuel on page 9-32*. For all other vehicles, use only the unleaded gasoline described under *Recommended Fuel on page 9-30*.

Driving for Better Fuel Economy

Driving habits can affect fuel mileage. Here are some driving tips to get the best fuel economy possible.

- Avoid fast starts and accelerate smoothly.
- Brake gradually and avoid abrupt stops.
- Avoid idling the engine for long periods of time.
- When road and weather conditions are appropriate, use cruise control.
- Always follow posted speed limits or drive more slowly when conditions require.
- Keep vehicle tires properly inflated.
- Combine several trips into a single trip.
- Replace the vehicle's tires with the same TPC Spec number molded into the tire's sidewall near the size.
- Follow recommended scheduled maintenance.

Battery

The battery is located in the trunk, behind a trim panel, on the driver side. If the vehicle has the auxiliary battery option K5S, the auxiliary battery is in the trunk, behind a trim panel on the passenger side of the vehicle. When it is time for a new battery, see your dealer for one that has the replacement number shown on the original battery's label.

See *Battery on page 10-22*.

Roadside Assistance Program

U.S.: 1-800-243-8872

TTY Users (U.S. Only): 1-888-889-2438

As the owner of a new Chevrolet, you are automatically enrolled in the Roadside Assistance program.

See *Roadside Assistance Program on page 13-4*.

Keys, Doors, and Windows

Keys and Locks
Keys 2-1
Remote Keyless Entry (RKE) System 2-2
Remote Keyless Entry (RKE) System Operation 2-3
Remote Vehicle Start 2-5
Door Locks 2-6
Power Door Locks 2-8
Safety Locks 2-8

Doors
Trunk 2-9

Vehicle Security
Vehicle Security 2-10
Vehicle Alarm System 2-10
Immobilizer 2-11
Immobilizer Operation 2-11

Exterior Mirrors
Convex Mirrors 2-12
Power Mirrors 2-13
Folding Mirrors 2-13
Heated Mirrors 2-13

Interior Mirrors
Manual Rearview Mirror 2-13

Windows
Windows 2-14
Power Windows 2-14

Keys and Locks

Keys

⚠ Warning

Leaving children in a vehicle with the ignition key is dangerous and children or others could be seriously injured or killed. They could operate the power windows or other controls or make the vehicle move. The windows will function with the keys in the ignition, and children or others could be caught in the path of a closing window. Do not leave children in a vehicle with the ignition key.

The key that is part of the Remote Keyless Entry (RKE) transmitter can be used for the ignition and all locks.

Press the button on the RKE transmitter to extend the key. Press the button to retract the key.

See your dealer if a new key is needed.

If it becomes difficult to turn a key, inspect the key blade for debris. Periodically clean with a brush or pick.

If locked out of the vehicle, see *Roadside Assistance Program on page 13-4*.

Remote Keyless Entry (RKE) System

See *Radio Frequency Statement on page 13-12*.

If there is a decrease in the RKE operating range:

- Check the distance. The transmitter may be too far from the vehicle.
- Check the location. Other vehicles or objects may be blocking the signal.
- Check the transmitter's battery. See “Battery Replacement” later in this section.
- If the transmitter is still not working correctly, see your dealer or a qualified technician for service.

Remote Keyless Entry (RKE) System Operation

The RKE transmitter may work up to 60 m (197 ft) away from the vehicle.

Other conditions can affect the performance of the transmitter. See *Remote Keyless Entry (RKE) System on page 2-2*.

The RKE transmitter can have one of these two symbols for the remote trunk release.

(Lock): Press to lock all doors. The turn signal indicators may flash and/or the horn may sound to indicate locking. See “Remote Lock Feedback” under *Vehicle Personalization on page 5-26*. If a passenger door is open when is pressed, all doors lock. If the driver door is open when is pressed, all doors lock except the driver door. These settings can be modified. See “Open Door Anti Lock Out” under *Vehicle Personalization on page 5-26*.

Pressing may also arm the theft-deterrent system. See *Vehicle Alarm System on page 2-10*.

(Unlock): Press to unlock the driver door or all doors. See “Remote Door Unlock” under *Vehicle Personalization on page 5-26*. The turn signal indicators flash to indicate unlocking has occurred. For more information see “Remote Unlock Feedback” under *Vehicle Personalization on page 5-26*. Pressing may also disarm the theft-deterrent system. See *Vehicle Alarm System on page 2-10*.

or HOLD (Remote Trunk Release): Press and hold until the trunk begins to move.

(Vehicle Locator/Panic Alarm): Vehicle locator and panic alarm disabled.

(Remote Vehicle Start): Press and release then press and hold for at least four seconds to start

the engine from outside the vehicle using the RKE transmitter. See *Remote Vehicle Start on page 2-5*.

The buttons on the transmitter are disabled when there is a key in the ignition.

Programming Transmitters to the Vehicle

The following procedure is for programming additional transmitters only. If all vehicle transmitters are lost or no longer work, see your dealer. A new key and transmitter must be made prior to programming.

Option AMF is a package of six keys and transmitters, including six cut keys with integrated Remote Keyless Entry. The transmitters are not programmed.

Each transmitter, including the two standard with the vehicle, must be programmed at the same time by the customer or by a dealer.

The remote transmitters must be programmed separately for a vehicle in the fleet.

A maximum of 8 keys can be programmed for the vehicle with a random key code. Vehicles with the fleet key option (RPO 6E3 or 6E4) may have an unlimited number of keys learned for these options, using the original master key.

When programming option AMF, additional six RKE transmitters, the original two vehicle transmitters must also be reprogrammed at the same time. A maximum of eight RKE transmitters can be programmed for a vehicle.

Programming the Key and Transmitter

1. The six RPO AMF keys are pre-cut at vehicle assembly. If a key is separate from AMF, cut the new key blank to match the existing vehicle key.
2. Using the existing key, turn the ignition to ON/RUN with the engine off.
3. Turn the key to OFF/LOCK and remove the key from the ignition.
4. Insert and turn the new key and turn the ignition to ON/RUN within 10 seconds of removing the existing key.

   The vehicle has now learned the new key.

Battery Replacement

Replace the battery if the REPLACE BATTERY IN REMOTE KEY message displays in the DIC.

⚠ Caution

When replacing the battery, do not touch any of the circuitry on the transmitter. Static from your body could damage the transmitter.

The battery is not rechargeable. To replace the battery:

1. Press the button on the transmitter to extend the key.
2. Remove the battery cover by prying with a finger.
3. Remove the battery by pushing on the battery and sliding it toward the key blade.
4. Insert the new battery, positive side facing up. Push the battery down until it is held in place. Replace with a CR2032 or equivalent battery.
5. Snap the battery cover back on to the transmitter.

Remote Vehicle Start

Remote start allows the engine to be started from outside the vehicle.

(Remote Vehicle Start): The remote start button is on the RKE transmitter.

The climate control system will use the previous settings during a remote start.

Laws in some local communities may restrict the use of remote starters. For example, some laws require a person using remote start to have the vehicle in view. Check local regulations for any requirements.

Other conditions can affect the performance of the transmitter. See *Remote Keyless Entry (RKE) System on page 2-2*.

Starting the Vehicle

To start the engine using the remote start feature:

1. Aim the RKE transmitter at the vehicle.
2. Press and release 🔓.
3. Immediately after completing Step 2, press and hold for at least four seconds or until the turn signal lamps flash. The turn signal lamps flashing confirms the request to remote start the vehicle has been received.

When the engine starts, the parking lamps will turn on and remain on as long as the engine is running. The doors will be locked and the climate control system may come on.

The engine will continue to run for 10 minutes. Repeat the steps to extend to 20 minutes. Remote start can be extended only once.

Start the vehicle before driving.

Extending Engine Run Time

To extend to 20 minutes, repeat Steps 1–3 while the engine is still running. The remote start can be extended once.

For example, if the engine has been running for five minutes, and the remote start is extended, the engine will run for a total of 20 minutes.

A maximum of two remote starts, or a single start with an extension, is allowed between ignition cycles.

The vehicle's ignition must be turned on and then back off before the remote start procedure can be used again.

Canceling a Remote Start

To cancel a remote start, do one of the following:

- Aim the RKE transmitter at the vehicle and press and hold until the parking lamps turn off.
- Turn on the hazard warning flashers.
- Turn the vehicle on and then off.

Conditions in Which Remote Start Will Not Work

The remote vehicle start feature will not operate if:

- The key is in the ignition.
- The vehicle is unlocked.
- The hood is not closed.
- The hazard warning flashers are on.
- The malfunction indicator lamp is on.
- The engine coolant temperature is too high.
- The oil pressure is low.
- Two remote vehicle starts, or a single remote start with an extension, have already been used.
- The vehicle is not in P (Park).

Door Locks

⚠ Warning

Unlocked doors can be dangerous.

- Passengers, especially children, can easily open the doors and fall out of a moving vehicle. When a door is locked, the handle will not open it. The chance of being thrown out of the vehicle in a crash is increased if the

(Continued)

Warning (Continued)

doors are not locked. So, all passengers should wear safety belts properly and the doors should be locked whenever the vehicle is driven.

- Young children who get into unlocked vehicles may be unable to get out. A child can be overcome by extreme heat and can suffer permanent injuries or even death from heat stroke. Always lock the vehicle whenever leaving it.
- Outsiders can easily enter through an unlocked door when you slow down or stop the vehicle. Locking the doors can help prevent this from happening.

To lock or unlock the doors from the outside, press 🔒 or 🔓 on the Remote Keyless Entry (RKE) transmitter. See *Remote Keyless Entry (RKE) System Operation on page 2-3*.

To unlock the door from the outside use the key.

To lock or unlock the doors from the inside:

- Pushing down the manual lock knob on a front door will lock all doors.
- Pull the door handle once to unlock the door. Pulling the handle again unlatches the door.
- Press 🔒 or 🔓 on the power door lock switch. See *Power Door Locks on page 2-8*.

Free Turning Door Locks

The door lock cylinder is designed to turn freely if it is forcibly rotated without the correct key or if the correct key is not fully inserted.

To reset:

1. Fully insert the correct key and turn the lock until the slot is vertical.
2. Remove the key, then reinsert it.
3. If the lock still turns freely, turn the key 180 degrees and repeat the procedure.

This feature is a theft deterrent to prevent the lock from being forced open. The force required to make the key turn freely reduces each time. Do not demonstrate or test this feature.

Always remember to fully insert the key when locking and unlocking the doors.

Power Door Locks

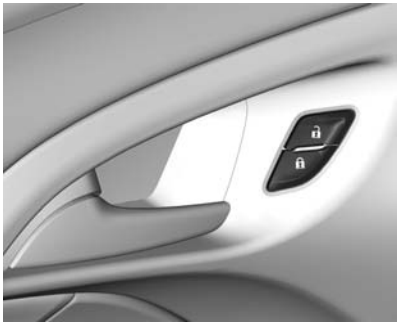

(Unlock): Press to unlock the doors.

(Lock): Press to lock the doors.

Safety Locks

The rear door safety locks prevent passengers from opening the rear doors from inside the vehicle.

Manual Safety Locks

The safety lock is on the inside edge of the rear doors. To use the safety lock:

1. Insert the key into the safety lock slot and turn it so the slot is in the horizontal position.
2. Close the door.
3. Do the same for the other rear door.

To open a rear door when the safety lock is on:

1. Unlock the rear door with the power door lock switch or the Remote Keyless Entry (RKE) transmitter.
2. Open the door from the outside.

To cancel the safety lock:

1. Unlock the door and open it from the outside.
2. Insert the key into the safety lock slot and turn it so the slot is in the vertical position.
3. Do the same for the other rear door.

If equipped see *Inoperative Rear Door Locks and Handles - SEO 6N6 on page 15-9*.

Doors

Trunk

⚠ Warning

Exhaust gases can enter the vehicle if it is driven with the liftgate or trunk/hatch open, or with any objects that pass through the seal between the body and the trunk/hatch or liftgate. Engine exhaust contains carbon monoxide (CO) which cannot be seen or smelled. It can cause unconsciousness and even death.

If the vehicle must be driven with the liftgate or trunk/hatch open:

- Close all of the windows.
- Fully open the air outlets on or under the instrument panel.

(Continued)

Warning (Continued)

- Adjust the climate control system to a setting that brings in only outside air and set the fan speed to the highest setting. See “Climate Control Systems” in the Index.
- If the vehicle is equipped with a power liftgate, disable the power liftgate function.

See *Engine Exhaust on page 9-19*.

Trunk Release

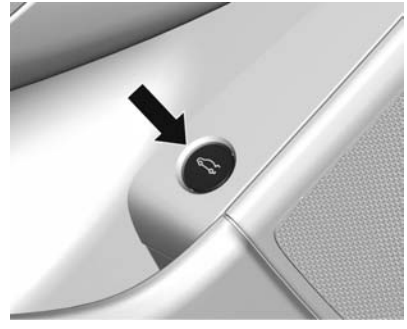

From inside the vehicle, press on the driver or passenger door. The ignition must be in ON/RUN or ACC/ACCESSORY, or the vehicle speed must be less than 3 km/h (2 mph) for the trunk release to operate.

Remote Trunk Release

From outside the vehicle, press or HOLD on the RKE transmitter.

Emergency Trunk Release Handle

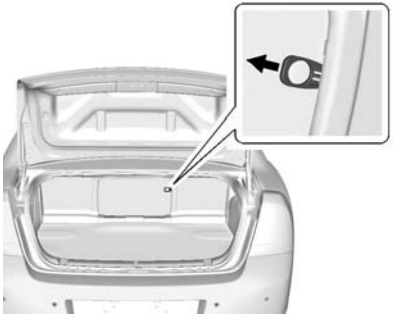

⚠ Caution

Do not use the emergency trunk release handle as a tie-down or anchor point when securing items in the trunk as it could damage the handle.

The emergency trunk release handle is behind the center rear seat. Pull the release handle sideways to open the trunk from the inside.

Vehicle Security

This vehicle has theft-deterrent features; however, they do not make the vehicle impossible to steal.

Vehicle Alarm System

This vehicle may have an anti-theft alarm system.

The security light, on the instrument panel near the windshield, indicates the status of the system:

Off: Alarm system is disarmed.

On Solid: Vehicle is secured during the delay to arm the system.

Fast Flash: Vehicle is unsecured. A door, the hood, or the trunk is open.

Slow Flash: Alarm system is armed.

Arming the Alarm System

1. Turn off the vehicle.
2. Lock the vehicle with one of the following:
   - Use the RKE transmitter.
   - With a door open, press 🔒 on the interior of the door.
3. After 30 seconds the alarm system will arm, and the indicator light will begin to slowly flash indicating the alarm system is operating. Pressing 🔒 on the RKE transmitter a second time will bypass the 30-second delay and immediately arm the alarm system.

The vehicle alarm system will not arm if the doors are locked with the key.

If the driver door is opened without first unlocking with the RKE transmitter, the horn will chirp and the lights will flash to indicate a pre-alarm. If the vehicle is not started, or the door is not unlocked by pressing 🔓 on the RKE transmitter during the 10-second pre-alarm, the alarm will be activated.

The alarm will also be activated if the passenger door, the trunk, or the hood is opened without first disarming the system. When the alarm is activated, the turn signals flash and the horn sounds for about 30 seconds. The alarm system will then re-arm to monitor for the next unauthorized event.

Disarming the System

To disarm the system, do one of the following:

- Press 🔓 on the RKE transmitter.
- Start the engine.
- Unlocking using the driver door key cylinder will disarm the system and not cause an alarm to sound.

To avoid setting off the alarm by accident:

- Lock the vehicle with the RKE transmitter after all occupants have left the vehicle and all doors are closed.

Immobilizer

See *Radio Frequency Statement on page 13-12*.

Immobilizer Operation

This vehicle has a passive theft-deterrent system.

The system does not have to be manually armed or disarmed.

The immobilizer activates itself automatically after the key has been removed from the ignition switch.

The system checks whether the vehicle is allowed to start with the key used. If the transponder in the key is recognized, the vehicle can be started.

The security light in the instrument cluster comes on when there is a problem with arming or disarming the theft-deterrent system.

The system has one or more transmitters matched to an immobilizer control unit in your vehicle. Only a correctly matched transmitter will start the vehicle. If the transmitter is ever damaged, you may not be able to start your vehicle.

When trying to start the vehicle, the security light comes on briefly when the ignition is turned on.

If the vehicle does not start and the security light stays on, there is a problem with the system. Turn the vehicle off and try again.

If the RKE transmitter appears to be undamaged, try another transmitter.

If the vehicle does not start with the other transmitter see your dealer.

Do not leave the transmitter that disarms or deactivates the theft-deterrent system, in the vehicle.

Exterior Mirrors

Convex Mirrors

⚠ Warning

A convex mirror can make things, like other vehicles, look farther away than they really are. If you cut too sharply into the right lane, you could hit a vehicle on the right. Check the inside mirror or glance over your shoulder before changing lanes.

The passenger side mirror is convex shaped. A convex mirror's surface is curved so more can be seen from the driver seat.

Power Mirrors

To adjust the mirrors:

1. With the ignition on, press the switch (2) to select the left or right mirror.
2. Press the arrows (1) to adjust the mirror.
3. Adjust the mirror to see a little of the vehicle, and the area behind the vehicle.

Keep the switch (2) in the center when not adjusting the mirrors.

Folding Mirrors

Manual Folding Mirrors

The mirrors can be folded inward toward the vehicle to prevent damage when going through an automatic car wash. Push the mirror outward to return it to the original position.

Heated Mirrors

If equipped, the vehicle has heated rearview mirrors.

(Rear Window Defogger): Press to heat the mirrors.

See *Dual Automatic Climate Control System on page 8-1*.

Interior Mirrors

Manual Rearview Mirror

Adjust the rearview mirror for a clear view of the area behind your vehicle.

Do not spray glass cleaner directly on the mirror. Use a soft towel dampened with water.

Windows

⚠ Warning

Never leave a child, a helpless adult, or a pet alone in a vehicle, especially with the windows closed in warm or hot weather. They can be overcome by the extreme heat and suffer permanent injuries or even death from heat stroke.

Power Windows

⚠ Warning

Children could be seriously injured or killed if caught in the path of a closing window. Never leave keys in a vehicle with children. When there are children in the rear seat, use the window lockout button to prevent operation of the windows. See *Keys on page 2-1*.

The power window switches on the driver door control all the windows. Each passenger door has a switch that controls only that window.

Power window switches work when the ignition is in ON/RUN, ACC/ACCESSORY, or Retained Accessory Power (RAP). See *Retained Accessory Power (RAP) on page 9-17*.

Press the switch to lower the window. Pull the switch to raise the window.

Express Down Windows

If equipped, press the switch fully to activate the express down feature. The express mode can be canceled at any time by briefly pressing the switch.

Rear Window Lockout

Press to prevent rear seat passengers from operating the windows. The indicator light illuminates when on. Press again to turn the feature off.

If equipped, see *Rear Windows Inoperative - SEO 6N5 on page 15-9*.

Programming the Power Windows

If the battery on the vehicle has been recharged or disconnected and the windows cannot be closed automatically, a warning message will display in the Driver Information Center (DIC). To reprogram the windows:

1. The ignition must be in ON/RUN or ACC/ACCESSORY, or Retained Accessory Power (RAP).
2. Press and hold the power window switch until the window is fully open.
3. Pull the power window switch up until the window is fully closed and keep holding the switch up for an additional two seconds.
4. Repeat for each window.

✍ NOTES

Seats and Restraints

Head Restraints
Head Restraints 3-2

Front Seats
Seat Adjustment 3-3
Lumbar Adjustment 3-4
Reclining Seatbacks 3-4

Safety Belts
Safety Belts 3-5
How to Wear Safety Belts Properly 3-7
Lap-Shoulder Belt 3-7
Safety Belt Use During Pregnancy 3-10
Safety Belt Extender 3-10
Safety System Check 3-10
Safety Belt Care 3-11
Replacing Safety Belt System Parts after a Crash 3-11

Airbag System
Airbag System 3-12
Where Are the Airbags? 3-14
When Should an Airbag Inflate? 3-16
What Makes an Airbag Inflate? 3-17
How Does an Airbag Restrain? 3-17
What Will You See after an Airbag Inflates? 3-17
Questions and Answers About Airbags and Specialty Law Enforcement Vehicles 3-19
Customer-Installed Equipment 3-20
Airbag Deployment Diagrams 3-22
Passenger Sensing System 3-30
Servicing the Airbag-Equipped Vehicle 3-34
Adding Equipment to the Airbag-Equipped Vehicle . . . 3-34
Airbag System Check 3-35
Replacing Airbag System Parts after a Crash 3-35

Child Restraints
Older Children 3-36
Infants and Young Children 3-38
Child Restraint Systems 3-40
Where to Put the Restraint . . . 3-42
Lower Anchors and Tethers for Children (LATCH System) 3-43
Replacing LATCH System Parts After a Crash 3-49
Securing Child Restraints (Rear Seat) 3-49
Securing Child Restraints (Front Outboard Passenger Seat) 3-51

Head Restraints

Front Seats

⚠ Warning

With head restraints that are not installed and adjusted properly, there is a greater chance that occupants will suffer a neck/spinal injury in a crash. Do not drive until the head restraints for all occupants are installed and adjusted properly.

The vehicle's front seats have adjustable head restraints in the outboard seating positions.

Adjust the head restraint so that the top of the restraint is at the same height as the top of the occupant's head. This position reduces the chance of a neck injury in a crash.

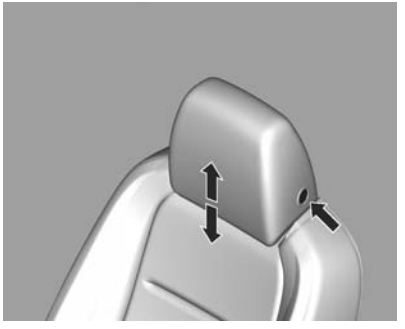

To raise or lower the head restraint, press the button located on the side of the head restraint, and pull up or push the head restraint down, and release the button. Pull and push on the head restraint after the button is released to make sure that it is locked in place.

The front seat outboard head restraints are not designed to be removed.

Rear Seats

The vehicle's rear seats have head restraints in the outboard seating positions that cannot be adjusted.

The rear outboard head restraints are not designed to be removed.

Front Seats

Seat Adjustment

⚠ Warning

You can lose control of the vehicle if you try to adjust a driver seat while the vehicle is moving. Adjust the driver seat only when the vehicle is not moving.

To adjust a manual seat:

1. Pull the handle at the front of the seat.
2. Slide the seat to the desired position and release the handle.
3. Try to move the seat back and forth to be sure it is locked in place.

Seat Height Adjuster

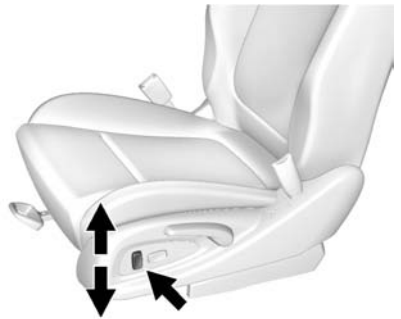

Press and hold the top or bottom of the switch to raise or lower the seat. Release the switch when the desired height is reached.

Lumbar Adjustment

Power Lumbar

Press and hold the front or rear of the control to increase or decrease lumbar support. Release the control when the seatback reaches the desired level of lumbar support.

Reclining Seatbacks

⚠ Warning

If either seatback is not locked, it could move forward in a sudden stop or crash. That could cause injury to the person sitting there. Always push and pull on the seatbacks to be sure they are locked.

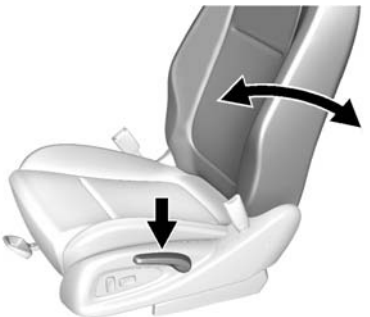

To recline the seatback:

1. Lift the lever.
2. Move the seatback to the desired position, then release the lever to lock the seatback in place.
3. Push and pull on the seatback to make sure it is locked.

To return the seatback to an upright position:

1. Lift the lever fully without applying pressure to the seatback, and the seatback returns to the upright position.
2. Push and pull on the seatback to make sure it is locked.

⚠ Warning

Sitting in a reclined position when the vehicle is in motion can be dangerous. Even when buckled up, the safety belts cannot do their job.

(Continued)

Warning (Continued)

The shoulder belt will not be against your body. Instead, it will be in front of you. In a crash, you could go into it, receiving neck or other injuries.

The lap belt could go up over your abdomen. The belt forces would be there, not at your pelvic bones. This could cause serious internal injuries.

For proper protection when the vehicle is in motion, have the seatback upright. Then sit well back in the seat and wear the safety belt properly.

Do not have a seatback reclined if the vehicle is moving.

Safety Belts

This section of the manual describes how to use safety belts properly. It also describes some things not to do with safety belts.

⚠ Warning

Do not let anyone ride where a safety belt cannot be worn properly. In a crash, if you or your passenger(s) are not wearing safety belts, injuries can be much worse than if you are wearing safety belts. You can be seriously injured or killed by hitting things inside the vehicle harder or by being ejected from the vehicle. In addition, anyone who is not buckled up can strike other passengers in the vehicle.

It is extremely dangerous to ride in a cargo area, inside or outside of a vehicle. In a collision, passengers riding in these areas

(Continued)

Warning (Continued)

are more likely to be seriously injured or killed. Do not allow passengers to ride in any area of the vehicle that is not equipped with seats and safety belts.

Always wear a safety belt, and check that all passenger(s) are restrained properly too.

This vehicle has indicators as a reminder to buckle the safety belts. See *Safety Belt Reminders on page 5-8*.

Why Safety Belts Work

When riding in a vehicle, you travel as fast as the vehicle does. If the vehicle stops suddenly, you keep going until something stops you. It could be the windshield, the instrument panel, or the safety belts!

When you wear a safety belt, you and the vehicle slow down together. There is more time to stop because you stop over a longer distance and, when worn properly, your strongest bones take the forces from the safety belts. That is why wearing safety belts makes such good sense.

Questions and Answers About Safety Belts

Q: Will I be trapped in the vehicle after a crash if I am wearing a safety belt?

A: You *could* be — whether you are wearing a safety belt or not. Your chance of being conscious during and after a crash, so you *can* unbuckle and get out, is *much* greater if you are belted.

Q: If my vehicle has airbags, why should I have to wear safety belts?

A: Airbags are supplemental systems only; so they work *with* safety belts — not instead of them. Whether or not an airbag is provided, all occupants still have to buckle up to get the most protection.

Also, in nearly all states and in all Canadian provinces, the law requires wearing safety belts.

How to Wear Safety Belts Properly

This section is only for people of adult size.

There are special things to know about safety belts and children. And there are different rules for smaller children and infants. If a child will be riding in the vehicle, see *Older Children on page 3-36* or *Infants and Young Children on page 3-38*. Follow those rules for everyone's protection.

It is very important for all occupants to buckle up. Statistics show that unbelted people are hurt more often in crashes than those who are wearing safety belts.

There are important things to know about wearing a safety belt properly.

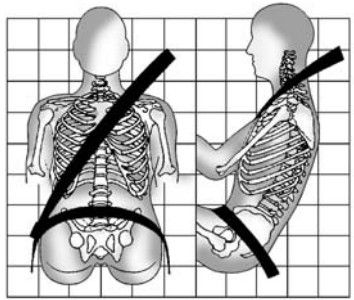

- Sit up straight and always keep your feet on the floor in front of you.
- Always use the correct buckle for your seating position.
- Wear the lap part of the belt low and snug on the hips, just touching the thighs. In a crash, this applies force to the strong pelvic bones and you would be less likely to slide under the lap belt. If you slid under it, the belt would apply force on your abdomen. This could cause serious or even fatal injuries.
- Wear the shoulder belt over the shoulder and across the chest. These parts of the body are best able to take belt restraining forces. The shoulder belt locks if there is a sudden stop or crash.

⚠ Warning

You can be seriously injured, or even killed, by not wearing your safety belt properly.

- Never allow the lap or shoulder belt to become loose or twisted.
- Never wear the shoulder belt under both arms or behind your back.
- Never route the lap or shoulder belt over an armrest.

Lap-Shoulder Belt

All seating positions in the vehicle have a lap-shoulder belt.

The following instructions explain how to wear a lap-shoulder belt properly.

1. Adjust the seat, if the seat is adjustable, so you can sit up straight. To see how, see “Seats” in the Index.

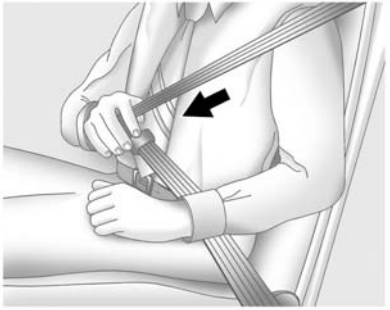

2. Pick up the latch plate and pull the belt across you. Do not let it get twisted.

   The lap-shoulder belt may lock if you pull the belt across you very quickly. If this happens, let the belt go back slightly to unlock it. Then pull the belt across you more slowly.

   If the shoulder portion of a rear seat passenger belt is pulled out all the way, the child restraint locking feature may be engaged. If this happens, let the belt go back all the way and start again.

If the webbing locks in the latch plate before it reaches the buckle, tilt the latch plate flat to unlock.

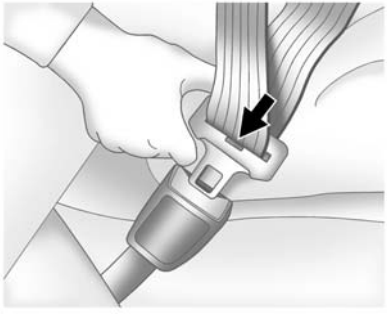

3. Push the latch plate into the buckle until it clicks.

   Pull up on the latch plate to make sure it is secure. If the belt is not long enough, see *Safety Belt Extender on page 3-10*.

   Position the release button on the buckle so that the safety belt could be quickly unbuckled if necessary.

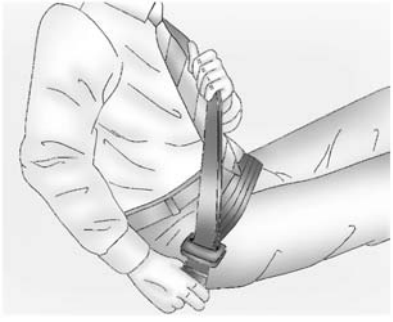

4. To make the lap part tight, pull up on the shoulder belt.

To unlatch the belt, push the button on the buckle. The belt should return to its stowed position.

Before a door is closed, be sure the safety belt is out of the way. If a door is slammed against a safety belt, damage can occur to both the safety belt and the vehicle.

Safety Belt Pretensioners

This vehicle has safety belt pretensioners for the front outboard occupants. Although the safety belt pretensioners cannot be seen, they are part of the safety belt assembly.

They can help tighten the safety belts during the early stages of a moderate to severe frontal, near-frontal, or rear crash if the threshold conditions for pretensioner activation are met. And, if the vehicle has side impact airbags, safety belt pretensioners can help tighten the safety belts in a side crash or a rollover event.

Pretensioners work only once. If the pretensioners activate in a crash, the pretensioners and probably other parts of the vehicle's safety belt system will need to be replaced. See *Replacing Safety Belt System Parts after a Crash on page 3-11*.

Safety Belt Use During Pregnancy

Safety belts work for everyone, including pregnant women. Like all occupants, they are more likely to be seriously injured if they do not wear safety belts.

A pregnant woman should wear a lap-shoulder belt, and the lap portion should be worn as low as possible, below the rounding, throughout the pregnancy.

The best way to protect the fetus is to protect the mother. When a safety belt is worn properly, it is more likely that the fetus will not be hurt in a crash. For pregnant women, as for anyone, the key to making safety belts effective is wearing them properly.

Safety Belt Extender

If the vehicle's safety belt will fasten around you, you should use it.

But if a safety belt is not long enough, your dealer will order you an extender. When you go in to order it, take the heaviest coat you will wear, so the extender will be long enough for you. To help avoid personal injury, do not let someone else use it, and use it only for the seat it is made to fit. The extender has been designed for adults. Never use it for securing child seats. To wear it, attach it to the regular safety belt. See the instruction sheet that comes with the extender.

Safety System Check

Now and then, check that the safety belt reminder light, safety belts, buckles, latch plates, retractors, and anchorages are all working properly. Look for any other loose or damaged safety belt system parts that might keep a safety belt system from doing its job. See your dealer

to have it repaired. Torn or frayed safety belts may not protect you in a crash. They can rip apart under impact forces. If a belt is torn or frayed, get a new one right away.

Make sure the safety belt reminder light is working. See *Safety Belt Reminders on page 5-8*.

Keep safety belts clean and dry. See *Safety Belt Care on page 3-11*.

Safety Belt Care

Keep belts clean and dry.

⚠ Warning

Do not bleach or dye safety belts. It may severely weaken them. In a crash, they might not be able to provide adequate protection. Clean safety belts only with mild soap and lukewarm water.

Replacing Safety Belt System Parts after a Crash

⚠ Warning

A crash can damage the safety belt system in the vehicle. A damaged safety belt system may not properly protect the person using it, resulting in serious injury or even death in a crash. To help make sure the safety belt systems are working properly after a crash, have them inspected and any necessary replacements made as soon as possible.

After a minor crash, replacement of safety belts may not be necessary. But the safety belt assemblies that were used during any crash may have been stressed or damaged.

See your dealer to have the safety belt assemblies inspected or replaced.

New parts and repairs may be necessary even if the safety belt system was not being used at the time of the crash.

Have the safety belt pretensioners checked if the vehicle has been in a crash, or if the airbag readiness light stays on after you start the vehicle or while you are driving. See *Airbag Readiness Light on page 5-9*.

Airbag System

The vehicle has the following airbags:

- A frontal airbag for the driver.
- A frontal airbag for the front outboard passenger.
- A knee airbag for the driver.
- A knee airbag for the front outboard passenger.
- A seat-mounted side impact airbag for the driver.
- A seat-mounted side impact airbag for the front outboard passenger.
- A roof-rail airbag for the driver.
- A roof-rail airbag for the front outboard passenger.

The vehicle may have the following airbags:

- A roof-rail airbag for the driver and the passenger seated directly behind the driver.
- A roof-rail airbag for the front outboard passenger and the passenger seated directly behind the front outboard passenger.

All vehicle airbags have the word AIRBAG on the trim or on a label near the deployment opening.

For frontal airbags, the word AIRBAG is on the center of the steering wheel for the driver and on the instrument panel for the front outboard passenger.

For knee airbags, the word AIRBAG is on the lower part of the instrument panel.

For seat-mounted side impact airbags, the word AIRBAG is on the side of the seatback closest to the door.

For roof-rail airbags, the word AIRBAG is on the ceiling or trim. On vehicles with front row roof-rail airbags, the word AIRBAG is on the trim above the front windows. On vehicles with front row and second row roof-rail airbags, the word AIRBAG is on the trim above the front windows and on the trim near the top of the pillar behind the second row seats.

Airbags are designed to supplement the protection provided by safety belts. Even though today's airbags are also designed to help reduce the risk of injury from the force of an inflating bag, all airbags must inflate very quickly to do their job.

Here are the most important things to know about the airbag system:

⚠ Warning

You can be severely injured or killed in a crash if you are not wearing your safety belt, even with airbags. Airbags are designed to work with safety belts, not replace them. Also, airbags are not designed to inflate in every crash. In some crashes

(Continued)

Warning (Continued)

safety belts are the only restraint. See *When Should an Airbag Inflate? on page 3-16*.

Wearing your safety belt during a crash helps reduce the chance of hitting things inside the vehicle or being ejected from it. Airbags are “supplemental restraints” to the safety belts. Everyone in the vehicle should wear a safety belt properly, whether or not there is an airbag for that person.

⚠ Warning

Because airbags inflate with great force and faster than the blink of an eye, anyone who is up against, or very close to any airbag when it inflates can be seriously injured or killed. Do not

(Continued)

Warning (Continued)

sit unnecessarily close to any airbag, as you would be if sitting on the edge of the seat or leaning forward. Safety belts help keep you in position before and during a crash. Always wear a safety belt, even with airbags. The driver should sit as far back as possible while still maintaining control of the vehicle.

Occupants should not lean on or sleep against the door or side windows in seating positions with seat-mounted side impact airbags and/or roof-rail airbags.

⚠ Warning

Children who are up against, or very close to, any airbag when it inflates can be seriously injured

(Continued)

Warning (Continued)

or killed. Always secure children properly in the vehicle. To read how, see *Older Children on page 3-36* or *Infants and Young Children on page 3-38*.

There is an airbag readiness light on the instrument cluster, which shows the airbag symbol. The system checks the airbag electrical system for malfunctions. The light tells you if there is an electrical problem. See *Airbag Readiness Light on page 5-9*.

Where Are the Airbags?

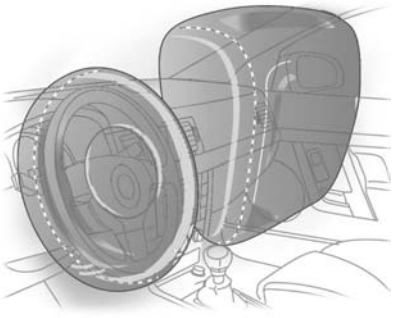

The driver frontal airbag is in the center of the steering wheel.

The front outboard passenger frontal airbag is in the passenger side instrument panel.

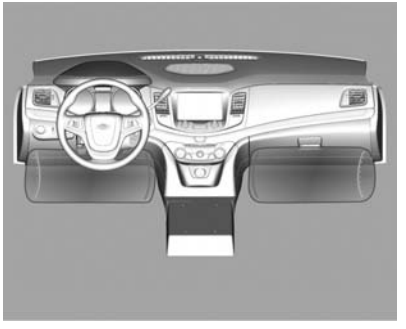

The driver knee airbag is below the steering column. The front outboard passenger knee airbag is below the glove box.

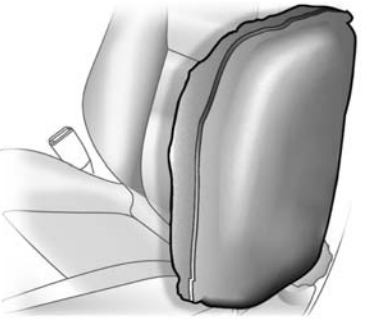

Driver Side Shown, Passenger Side Similar

The seat-mounted side impact airbags for the driver and front outboard passenger are in the side of the seatbacks closest to the door.

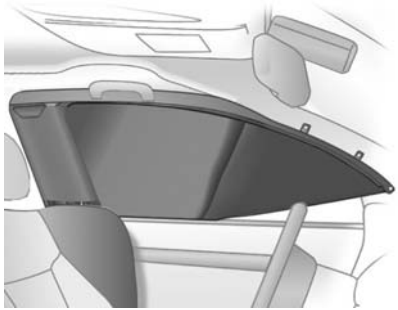

Driver Side Shown, Passenger Side Similar

The roof-rail airbags for the driver and front outboard passenger are in the ceiling above the side windows.

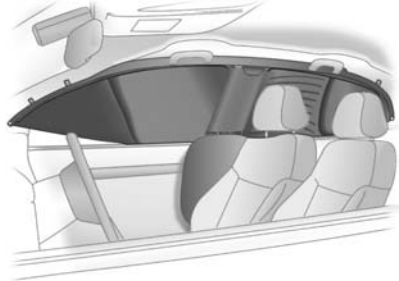

Passenger Side Shown, Driver Side Similar

If the vehicle has roof-rail airbags for the driver, front outboard passenger, and second row outboard passengers, they are in the ceiling above the side windows.

⚠ Warning

If something is between an occupant and an airbag, the airbag might not inflate properly or it might force the object into

(Continued)

Warning (Continued)

that person causing severe injury or even death. The path of an inflating airbag must be kept clear. Do not put anything between an occupant and an airbag, and do not attach or put anything on the steering wheel hub or on or near any other airbag covering.

Do not use seat accessories that block the inflation path of a seat-mounted side impact airbag.

Never secure anything to the roof of a vehicle with roof-rail airbags by routing a rope or tie-down through any door or window opening. If you do, the path of an inflating roof-rail airbag will be blocked.

When Should an Airbag Inflate?

This vehicle is equipped with airbags. See *Airbag System on page 3-12*. Airbags are designed to inflate if the impact exceeds the specific airbag system's deployment threshold. Deployment thresholds are used to predict how severe a crash is likely to be in time for the airbags to inflate and help restrain the occupants. The vehicle has electronic frontal sensors that help the airbag system determine the severity of the impact. Deployment thresholds can vary with specific vehicle design.

Frontal airbags are designed to inflate in moderate to severe frontal or near-frontal crashes to help reduce the potential for severe injuries, mainly to the driver's or front outboard passenger's head and chest.

Whether the frontal airbags will or should inflate is not based primarily on how fast the vehicle is traveling. It depends on what is hit, the direction of the impact, and how quickly the vehicle slows down.

Frontal airbags may inflate at different crash speeds depending on whether the vehicle hits an object straight on or at an angle, and whether the object is fixed or moving, rigid or deformable, narrow or wide.

Frontal airbags are not intended to inflate during vehicle rollovers, in rear impacts, or in many side impacts.

In addition, the vehicle has advanced technology frontal airbags. Advanced technology frontal airbags adjust the restraint according to crash severity.

The vehicle also has seat position sensors that enable the sensing system to monitor the position of the driver seat and the front outboard passenger seat. Seat position sensors provide information that is used to adjust the deployment of the frontal airbags.

Knee airbags are designed to inflate in moderate to severe frontal impacts. Knee airbags are not designed to inflate during vehicle rollovers, in rear impacts, or in many side impacts.

Seat-mounted side impact airbags are designed to inflate in moderate to severe side crashes, depending on the location of the impact. Seat-mounted side impact airbags are not designed to inflate in frontal impacts, near-frontal impacts, rollovers, or rear impacts.
A seat-mounted side impact airbag is designed to inflate on the side of the vehicle that is struck.

Roof-rail airbags are designed to inflate in moderate to severe side crashes, depending on the location of the impact. In addition, these roof-rail airbags are designed to inflate during a rollover or in a severe frontal impact. Roof-rail airbags are not designed to inflate in rear impacts. Both roof-rail airbags will inflate when either side of the vehicle is struck or if the sensing

system predicts that the vehicle is about to roll over on its side, or in a severe frontal impact.

In any particular crash, no one can say whether an airbag should have inflated simply because of the vehicle damage or repair costs.

What Makes an Airbag Inflate?

In a deployment event, the sensing system sends an electrical signal triggering a release of gas from the inflator. Gas from the inflator fills the airbag causing the bag to break out of the cover. The inflator, the airbag, and related hardware are all part of the airbag module.

For airbag locations, see *Where Are the Airbags? on page 3-14*.

How Does an Airbag Restrain?

In moderate to severe frontal or near frontal collisions, even belted occupants can contact the steering wheel or the instrument panel. In moderate to severe side collisions, even belted occupants can contact the inside of the vehicle.

Airbags supplement the protection provided by safety belts by distributing the force of the impact more evenly over the occupant's body.

Rollover capable roof-rail airbags are designed to help contain the head and chest of occupants in the outboard seating positions in the first row, or first and second rows (if equipped). The rollover capable roof-rail airbags are designed to help reduce the risk of full or partial ejection in rollover events, although no system can prevent all such ejections.

But airbags would not help in many types of collisions, primarily because the occupant's motion is not toward those airbags. See *When Should an Airbag Inflate? on page 3-16*.

Airbags should never be regarded as anything more than a supplement to safety belts.

What Will You See after an Airbag Inflates?

After the frontal airbags and seat-mounted side impact airbags inflate, they quickly deflate, so quickly that some people may not even realize an airbag inflated. Roof-rail airbags may still be at least partially inflated for some time after they inflate. Some components of the airbag module may be hot for several minutes. For location of the airbags, see *Where Are the Airbags? on page 3-14*.

The parts of the airbag that come into contact with you may be warm, but not too hot to touch. There may be some smoke and dust coming from the vents in the deflated airbags. Airbag inflation does not prevent the driver from seeing out of

the windshield or being able to steer the vehicle, nor does it prevent people from leaving the vehicle.

⚠ Warning

When an airbag inflates, there may be dust in the air. This dust could cause breathing problems for people with a history of asthma or other breathing trouble. To avoid this, everyone in the vehicle should get out as soon as it is safe to do so. If you have breathing problems but cannot get out of the vehicle after an airbag inflates, then get fresh air by opening a window or a door. If you experience breathing problems following an airbag deployment, you should seek medical attention.

The vehicle has a feature that may automatically unlock the doors, turn on the interior lamps, turn on the hazard warning flashers, and shut off the fuel system after the airbags inflate. You can lock the doors, turn off the interior lamps, and turn off the hazard warning flashers by using the controls for those features.

⚠ Warning

A crash severe enough to inflate the airbags may have also damaged important functions in the vehicle, such as the fuel system, brake and steering systems, etc. Even if the vehicle appears to be drivable after a moderate crash, there may be concealed damage that could make it difficult to safely operate the vehicle.

Use caution if you should attempt to restart the engine after a crash has occurred.

In many crashes severe enough to inflate the airbag, windshields are broken by vehicle deformation. Additional windshield breakage may also occur from the front outboard passenger airbag.

- Airbags are designed to inflate only once. After an airbag inflates, you will need some new parts for the airbag system. If you do not get them, the airbag system will not be there to help protect you in another crash. A new system will include airbag modules and possibly other parts. The service manual for the vehicle covers the need to replace other parts.
- The vehicle has a crash sensing and diagnostic module which records information after a crash. See *Vehicle Data Recording and Privacy on page 13-11* and *Event Data Recorders on page 13-11*.
- Let only qualified technicians work on the airbag systems. Improper service can mean that

an airbag system will not work properly. See your dealer for service.

Questions and Answers About Airbags and Specialty Law Enforcement Vehicles

Q: Can equipment such as radar devices, video cameras, and radio trees be mounted in a specialty vehicle equipped with a front outboard passenger frontal airbag?

A: Yes, but care must be taken to properly mount the equipment outside of the airbag "deployment zone."

Q: What is the airbag "deployment zone"?

A: The term "deployment zone" describes the space an airbag takes up when fully inflated. Airbags need room to work properly, and anything in the "deployment zone" — such as improperly mounted equipment — can greatly affect the performance of the airbag.

⚠ Warning

Airbags inflate with great force, faster than the blink of an eye. No objects, such as shotguns, should be placed over or near the airbag covers. Equipment mounted too close to an inflating airbag could break and become a dangerous projectile in a crash, causing injury to the vehicle's occupants. Also, an object too close to an inflating airbag could prevent the airbag from operating properly. If this ever happens, the airbag would not be able to protect occupants the way it was designed to. To help prevent injury and to allow the airbag to perform as it was designed, do not mount equipment inside the airbag deployment zone.

Q: How can I identify the airbag "deployment zone" in my vehicle?

A: See *Airbag Deployment Diagrams on page 3-22* for more information. The diagrams provide the approximate dimensions of the "deployment zones" for your specialty vehicle. Before doing any service work, including the installation of any equipment, consult the appropriate service manual.

Q: Is it possible to shield equipment so it does not interfere with airbag deployment?

A: While shielding may protect certain equipment from being damaged or dislodged, it may also negatively affect how an airbag inflates. Therefore, we cannot recommend the placement of any equipment in the deployment zone, even when shielding.

Q: Can the installation of push bumpers on the front end of the vehicle affect the deployment of the airbag?

A: General Motors is not aware of adverse effects during crash events from the many push bumpers that have been installed on GM police vehicles. Because there are many styles of push bumpers available with varying crash characteristics, installation of push bumpers may or may not affect deployment timing of the airbags.

Push bumpers should be mounted to avoid modifying the vehicle structure and interfering with the front airbag sensors mounted on the upper radiator support cross member. Two front impact sensors are installed in General Motors vehicles. Do not relocate or disconnect the front sensors. The location and orientation of the front sensors are critical for correct operation of the airbag system.

Avoid mounting components on or near the sensors. Push bumper styles with vertical pushing members that are in alignment with the front airbag sensors are not recommended.

Q: Is there anything I might add to the front or sides of the vehicle that could keep the airbags from working properly?

A: Yes. If you add things that change your vehicle's frame, bumper system, height, front end, or side sheet metal, they may keep the airbag system from working properly. Also, the airbag system may not work properly if you relocate any of the airbag sensors. If you have any questions about this, you should contact Customer Assistance before you modify the vehicle. The phone numbers and addresses for Customer Assistance are in Step Two of the Customer Satisfaction Procedures in the owner manual. See *Customer Satisfaction Procedure on page 13-1*.

The service manual has information about the location of the airbag sensors, sensing and diagnostic module, and airbag wiring. See *Service Publications Ordering Information on page 13-9*.

Customer-Installed Equipment

Before installing equipment, read the following.

When installing aftermarket equipment, see *Airbag Deployment Diagrams on page 3-22*.

⚠ Caution

GM approved service procedures must be followed to remove and reinstall the instrument panel to the pad in order to ensure proper airbag deployment.

⚠ Caution

Do not mount equipment on the passenger side of the instrument panel top pad deployment zone. Equipment should not be mounted on or around the passenger airbag opening because of a deploying airbag. To allow the airbag to perform as it was designed, do not mount equipment inside the airbag deployment zone.

⚠ Caution

The police vehicle has roof-rail airbags. Do not mount a security barrier such that the ends of the barrier or brackets are within the roof-rail deployment zones.

⚠ Caution

Avoid installing wiring for roof-rail emergency lighting or radio antennas that may restrict the proper deployment of the roof-rail airbags.

⚠ Caution

The police vehicle has seat-mounted side impact airbags for the driver and passenger front seat positions. Restricting the cover from opening prevents proper deployment of the seat-mounted side impact airbag. Do not cover or restrict the seat-mounted side impact airbag cover located on the outboard side of the seatback.

⚠ Caution

This vehicle has driver and front passenger frontal and knee airbags. Do not install equipment rearward of the passenger side instrument panel that may interfere with the deployment of the airbags.

Airbag Deployment Diagrams

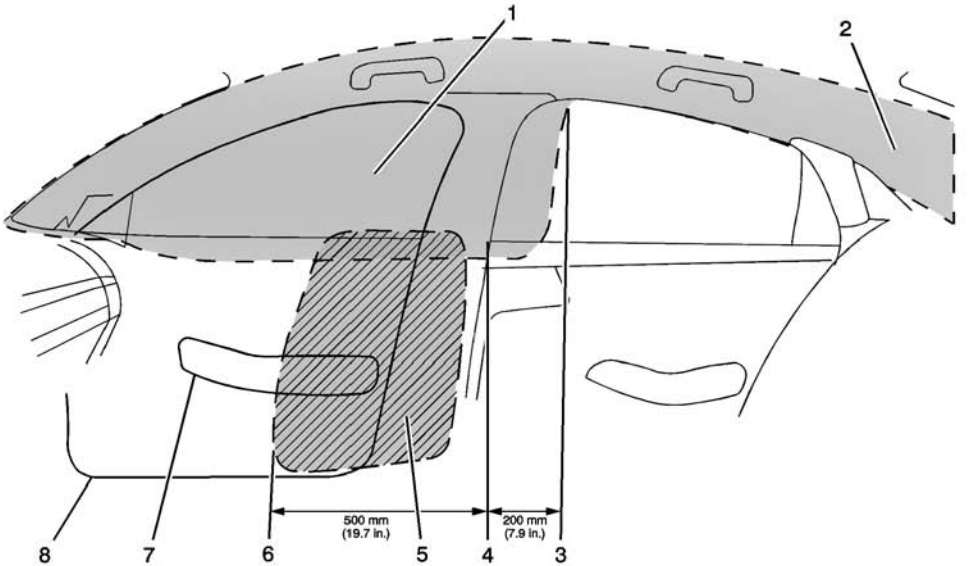

Standard Roof-Rail and Seat-Mounted Side Impact Airbag Deployment Zones, Passenger Side Shown, Driver Side Similar

1. Roof-Rail Airbag Zone — Front Seats Only
2. Zone Extends into Sail Panel Area
3. Rearmost End of Front Roof-Rail Airbag Zone
4. Back Edge of Body Center Pillar Trim at Bottom of Rear Door Window
5. Front Seat Thorax-Pelvic Airbag Zone
6. Foremost End of Seat-Mounted Thorax Airbag Zone
7. Front Door Armrest
8. Front Door Sill

See *Customer-Installed Equipment on page 3-20* for more information.

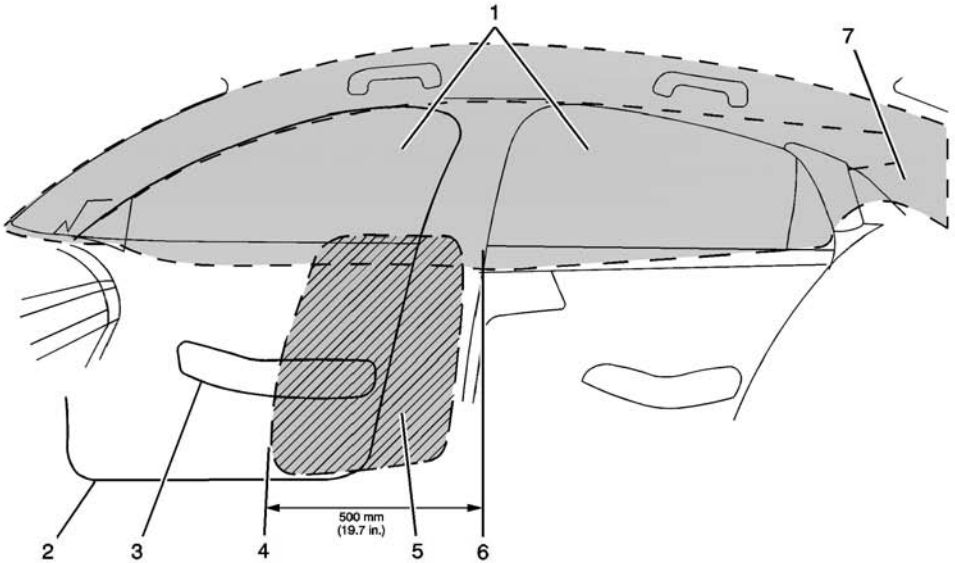

Optional (RPO AYG) Roof-Rail and Seat-Mounted Side Impact Airbag Deployment Zones, Passenger Side Shown, Driver Side Similar

1. Roof-Rail Airbag Zone — Front and Rear Seats
2. Front Door Sill
3. Front Door Armrest
4. Foremost End of Seat-Mounted Thorax Airbag Zone
5. Front Seat Thorax Airbag Zone
6. Back Edge of Body Center Pillar Trim at Bottom of Rear Door Window
7. Zone Extends into Sail Panel Area

See *Customer-Installed Equipment on page 3-20* for more information.

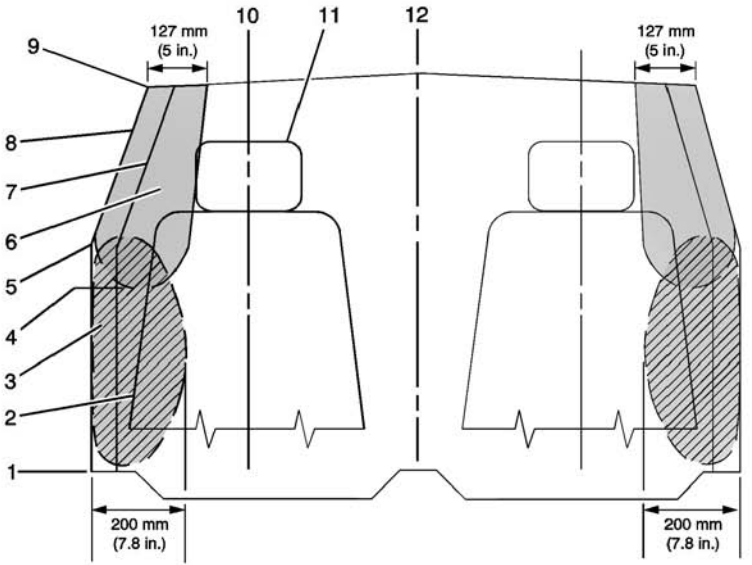

Roof-Rail and Seat-Mounted Side Impact Airbag (RPO AKC) Deployment Zones, View from Rear Seat

The driver side is a mirror image of the passenger side.

1. Door Sill
2. Seatback
3. Front Seatback Thorax-Pelvic Airbag Zone
4. Front Door Handle
5. Bottom of Door Windows
6. Roof-Rail Airbag Zone
7. Center Body Pillar Trim
8. Door Inner Trim Panel
9. Edge of Headliner
10. Centerline of Occupant
11. Head Restraint
12. Vehicle Centerline

See *Customer-Installed Equipment on page 3-20* for more information.

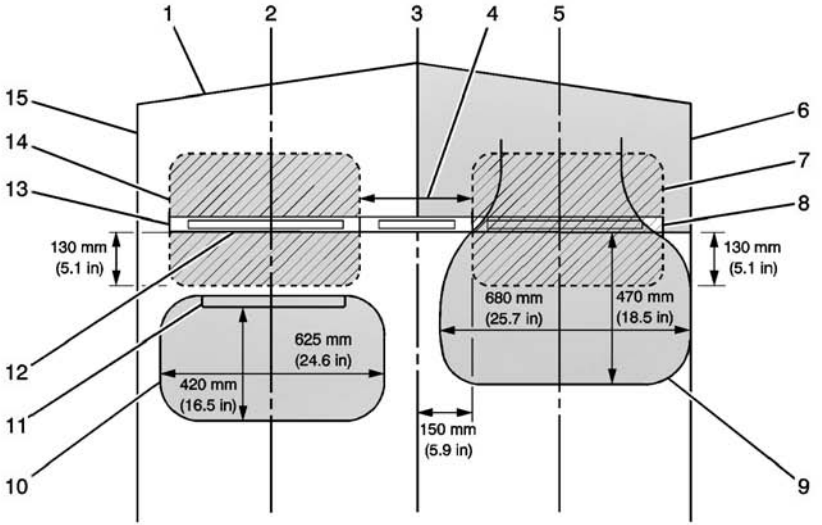

Instrument Panel and Approximate Deployment Area of the Driver and Front Passenger Airbags, View from Top

1. Front of Instrument Panel at the Windshield Base
2. Driver Centerline
3. Vehicle Centerline
4. Radio Center Stack
5. Front Passenger Centerline
6. Front Passenger Door Trim
7. Front Passenger Knee Airbag
8. Glove Box
9. Front Passenger Airbag
10. Driver Airbag
11. Steering Wheel
12. Rearmost Instrument Panel
13. Instrument Cluster
14. Driver Knee Airbag
15. Driver Door Trim

See *Customer-Installed Equipment on page 3-20* for more information.

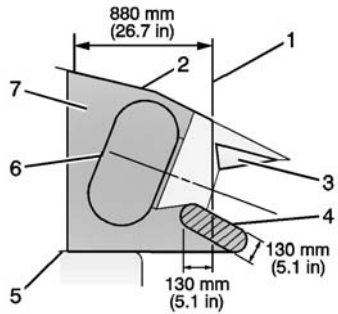

Side View of Steering Wheel Airbag Deployment Zone – Centerline of Driver, View from Right Side

1. Rearmost Position of Instrument Panel
2. Top of Windshield
3. Instrument Cluster
4. Driver Knee Airbag
5. Driver Seat
6. Driver Airbag
7. Driver Airbag Zone

See *Customer-Installed Equipment on page 3-20* for more information.

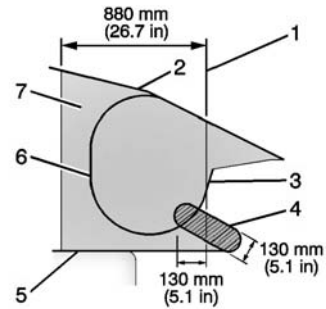

Side View of Passenger Side Airbag Deployment Zone – Centerline of Passenger, View from Right Side

1. Rearmost Position of Instrument Panel
2. Top of Windshield
3. Glove Box Door
4. Front Passenger Knee Airbag
5. Front Passenger Seat
6. Front Passenger Airbag

7. Front Passenger Airbag Zone

See *Customer-Installed Equipment on page 3-20* for more information.

Passenger Sensing System

The vehicle has a passenger sensing system for the front outboard passenger position. The passenger airbag status indicator will light on the overhead console when the vehicle is started.

The words ON and OFF will be visible during the system check. When the system check is complete, either the word ON or OFF will be visible. See *Passenger Airbag Status Indicator on page 5-9*.

The passenger sensing system turns off the front outboard passenger frontal airbag and knee airbag under certain conditions. No other airbag is affected by the passenger sensing system.

The passenger sensing system works with sensors that are part of the front outboard passenger seat. The sensors are designed to detect the presence of a properly-seated occupant and determine if the front outboard passenger frontal airbag and knee airbag should be allowed to inflate or not.

According to accident statistics, children are safer when properly secured in a rear seat in the correct child restraint for their weight and size.

Whenever possible, children age 12 and under should be secured in a rear seating position.

Never put a rear-facing child seat in the front. This is because the risk to the rear-facing child is so great, if the airbag inflates.

⚠ Warning

A child in a rear-facing child restraint can be seriously injured or killed if the passenger frontal airbag inflates. This is because the back of the rear-facing child restraint would be very close to the inflating airbag. A child in a forward-facing child restraint can be seriously injured or killed if the passenger frontal airbag inflates and the passenger seat is in a forward position.

Even if the passenger sensing system has turned off the front outboard passenger airbag(s), no system is fail-safe. No one can guarantee that an airbag will not inflate under some unusual circumstance, even though the airbag(s) are off.

(Continued)

Warning (Continued)

Secure rear-facing child restraints in a rear seat, even if the airbag(s) are off. If you secure a forward-facing child restraint in the front outboard passenger seat, always move the seat as far back as it will go. It is better to secure the child restraint in a rear seat.

The passenger sensing system is designed to turn off the front outboard passenger airbag and knee airbag if:

- The front outboard passenger seat is unoccupied.
- The system determines that an infant is present in a child restraint.
- A front outboard passenger takes his/her weight off of the seat for a period of time.
- There is a critical problem with the airbag system or the passenger sensing system.

When the passenger sensing system has turned off the front outboard passenger frontal airbag and knee airbag, the off indicator will light and stay lit to remind you that the airbags are off. See *Passenger Airbag Status Indicator on page 5-9*.

The passenger sensing system is designed to turn on the front outboard passenger frontal airbag and knee airbag anytime the system senses that a person of adult size is sitting properly in the front outboard passenger seat.

When the passenger sensing system has allowed the airbags to be enabled, the on indicator will light and stay lit as a reminder that the airbags are active.

For some children, including children in child restraints, and for very small adults, the passenger sensing system may or may not turn off the front outboard passenger frontal airbag and knee airbag, depending upon the person's seating posture and body build. Everyone in the vehicle who has outgrown child restraints should wear a safety belt properly — whether or not there is an airbag for that person.

⚠ Warning

If the airbag readiness light ever comes on and stays on, it means that something may be wrong with the airbag system. To help avoid injury to yourself or others, have the vehicle serviced right away. See *Airbag Readiness Light on page 5-9* for more information, including important safety information.

If the On Indicator Is Lit for a Child Restraint

The passenger sensing system is designed to turn off the front outboard passenger frontal airbag and knee airbag if the system determines that an infant is present in a child restraint. If a child restraint has been installed and the on indicator is lit:

1. Turn the vehicle off.
2. Remove the child restraint from the vehicle.
3. Remove any additional items from the seat such as blankets, cushions, seat covers, seat heaters, or seat massagers.
4. Reinstall the child restraint following the directions provided by the child restraint manufacturer and refer to *Securing Child Restraints (Rear Seat) on page 3-49* or *Securing Child Restraints (Front Outboard Passenger Seat) on page 3-51*.
5. If, after reinstalling the child restraint and restarting the vehicle, the on indicator is still lit, turn the vehicle off. Then slightly recline the vehicle seatback and adjust the seat cushion, if adjustable, to make sure that the vehicle seatback is not pushing the child restraint into the seat cushion.
6. Restart the vehicle.

   The passenger sensing system may or may not turn off the airbags for a child in a child restraint depending upon the child's size. It is better to secure a child restraint in a rear seat.

If the Off Indicator Is Lit for an Adult-Sized Occupant

If a person of adult-size is sitting in the front outboard passenger seat, but the off indicator is lit, it could be because that person is not sitting properly in the seat. Use the following steps to allow the system to detect that person and enable the front outboard passenger frontal and knee airbags:

1. Turn the vehicle off.

2. Remove any additional material from the seat, such as blankets, cushions, seat covers, seat heaters, or seat massagers. Also remove laptops or other electronic devices.
3. Place the seatback in the fully upright position.
4. Have the person sit upright in the seat, centered on the seat cushion, with legs comfortably extended.
5. Restart the vehicle and have the person remain in this position for two to three minutes after the on indicator is lit.

⚠ Warning

If the front outboard passenger airbag is turned off for an adult-sized occupant, the airbag will not be able to inflate and help protect that person in a crash, resulting in an increased risk of

(Continued)

Warning (Continued)

serious injury or even death. An adult-sized occupant should not ride in the front outboard passenger seat, if the passenger airbag off indicator is lit.

Additional Factors Affecting System Operation

Safety belts help keep the passenger in position on the seat during vehicle maneuvers and braking, which helps the passenger sensing system maintain the passenger airbag status. See “Safety Belts” and “Child Restraints” in the Index for additional information about the importance of proper restraint use.

A thick layer of additional material, such as a blanket or cushion, or aftermarket equipment such as seat covers, seat heaters, and seat massagers can affect how well the passenger sensing system operates. We recommend that you not use seat covers or other aftermarket equipment except when approved by GM for your specific vehicle. See *Adding Equipment to the Airbag-Equipped Vehicle on page 3-34* for more information about modifications that can affect how the system operates.

A wet seat can affect the performance of the passenger sensing system. Here’s how:

- The passenger sensing system may turn off the passenger airbag when liquid is soaked into the seat. If this happens, the off indicator will be lit, and the airbag readiness light will also be lit.
- Liquid pooled on the seat that has not soaked in may make it more likely that the passenger sensing system will turn on the passenger airbag while a child restraint or child occupant is on

the seat. If the passenger airbag is turned on, the on indicator will be lit.

If the front passenger seat gets wet, dry it immediately. If the airbag readiness light is lit, do not install a child restraint or allow anyone to occupy the seat. See *Airbag Readiness Light on page 5-9* for important safety information.

The on indicator may be lit if an object, such as a briefcase, handbag, grocery bag, laptop, or other electronic device, is put on an unoccupied seat. If this is not desired, remove the object from the seat.

⚠ Warning

Stowing of articles under the passenger seat or between the passenger seat cushion and seatback may interfere with the proper operation of the passenger sensing system.

Servicing the Airbag-Equipped Vehicle

Airbags affect how the vehicle should be serviced. There are parts of the airbag system in several places around the vehicle. Your dealer and the service manual have information about servicing the vehicle and the airbag system. To purchase a service manual, see *Service Publications Ordering Information on page 13-9*.

⚠ Warning

For up to 10 seconds after the vehicle is turned off and the battery is disconnected, an airbag can still inflate during improper service. You can be injured if you are close to an airbag when it inflates. Avoid yellow connectors. They are probably part of the airbag system. Be sure to follow

(Continued)

Warning (Continued)

proper service procedures, and make sure the person performing work for you is qualified to do so.

Adding Equipment to the Airbag-Equipped Vehicle

Adding accessories that change the vehicle's frame, bumper system, height, front end or side sheet metal, may keep the airbag system from working properly. The operation of the airbag system can also be affected by changing or moving any parts of the front seats, safety belts, the airbag sensing and diagnostic module, steering wheel, instrument panel, any airbag module, ceiling or pillar garnish trim, the inside rearview mirror, front sensors, side impact sensors, or airbag wiring.

Your dealer and the service manual have information about the location of the airbag sensors, sensing and diagnostic module, and airbag wiring.

In addition, the vehicle has a passenger sensing system for the front outboard passenger seat. The passenger sensing system may not operate properly if the original seat trim is replaced with non-GM covers, upholstery or trim, or with GM covers, upholstery or trim designed for a different vehicle. Any object, such as an aftermarket seat heater or a comfort enhancing pad or device, installed under or on top of the seat fabric, could also interfere with the operation of the passenger sensing system. This could either prevent proper deployment of the passenger airbag(s) or prevent the passenger sensing system from properly turning off the passenger airbag(s). See *Passenger Sensing System on page 3-30*.

If the vehicle has rollover roof-rail airbags, see *Different Size Tires and Wheels on page 10-57* for additional important information.

If you have to modify your vehicle because you have a disability and have questions about whether the modifications will affect the vehicle's airbag system, or if you have questions about whether the airbag system will be affected if the vehicle is modified for any other reason, call Customer Assistance. See *Customer Assistance Offices on page 13-3*.

Airbag System Check

The airbag system does not need regularly scheduled maintenance or replacement. Make sure the airbag readiness light is working. See *Airbag Readiness Light on page 5-9*.

⚠ Caution

If an airbag covering is damaged, opened, or broken, the airbag may not work properly. Do not open or break the airbag coverings. If there are any opened or broken airbag coverings, have the airbag covering and/or airbag module replaced. For the location of the airbags, see *Where Are the Airbags? on page 3-14*. See your dealer for service.

Replacing Airbag System Parts after a Crash

⚠ Warning

A crash can damage the airbag systems in the vehicle.
A damaged airbag system may not work properly and may not

(Continued)

Warning (Continued)

protect you and your passenger(s) in a crash, resulting in serious injury or even death. To help make sure the airbag systems are working properly after a crash, have them inspected and any necessary replacements made as soon as possible.

If an airbag inflates, you will need to replace airbag system parts. See your dealer for service.

If the airbag readiness light stays on after the vehicle is started or comes on when you are driving, the airbag system may not work properly. Have the vehicle serviced right away. See *Airbag Readiness Light on page 5-9*.

Child Restraints

Older Children

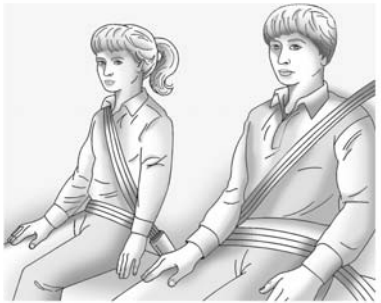

Older children who have outgrown booster seats should wear the vehicle safety belts.

The manufacturer's instructions that come with the booster seat state the weight and height limitations for that booster. Use a booster seat with a lap-shoulder belt until the child passes the fit test below:

- Sit all the way back on the seat. Do the knees bend at the seat edge? If yes, continue. If no, return to the booster seat.
- Buckle the lap-shoulder belt. Does the shoulder belt rest on the shoulder? If yes, continue. If no, return to the booster seat.
- Does the lap belt fit low and snug on the hips, touching the thighs? If yes, continue. If no, return to the booster seat.
- Can proper safety belt fit be maintained for the length of the trip? If yes, continue. If no, return to the booster seat.

Q: What is the proper way to wear safety belts?

A: An older child should wear a lap-shoulder belt and get the additional restraint a shoulder belt can provide. The shoulder belt should not cross the face or neck. The lap belt should fit snugly below the hips, just touching the top of the thighs. This applies belt force to the child's pelvic bones in a crash. It should never be worn over the abdomen, which could cause severe or even fatal internal injuries in a crash.

According to accident statistics, children are safer when properly restrained in a rear seating position.

In a crash, children who are not buckled up can strike other people who are buckled up, or can be thrown out of the vehicle. Older children need to use safety belts properly.

⚠ Warning

Never allow more than one child to wear the same safety belt. The safety belt cannot properly spread the impact forces. In a crash, they can be crushed together and seriously injured. A safety belt must be used by only one person at a time.

⚠ Warning

Never allow a child to wear the safety belt with the shoulder belt behind their back. A child can be seriously injured by not wearing the lap-shoulder belt properly. In a crash, the child would not be restrained by the shoulder belt. The child could move too far forward increasing the chance of head and neck injury. The child might also slide under the lap belt. The belt force would then be applied right on the abdomen. That could cause serious or fatal injuries. The shoulder belt should go over the shoulder and across the chest.

Infants and Young Children

Everyone in a vehicle needs protection! This includes infants and all other children. Neither the distance traveled nor the age and size of the traveler changes the need, for everyone, to use safety restraints. In fact, the law in every state in the United States and in every Canadian province says children up to some age must be restrained while in a vehicle.

⚠ Warning

Children can be seriously injured or strangled if a shoulder belt is wrapped around their neck and the safety belt continues to tighten. Never leave children unattended in a vehicle and never allow children to play with the safety belts.

Every time infants and young children ride in vehicles, they should have the protection provided by appropriate child restraints. Neither the vehicle's safety belt system nor its airbag system is designed for them.

Children who are not restrained properly can strike other people, or can be thrown out of the vehicle.

⚠ Warning

Never hold an infant or a child while riding in a vehicle. Due to crash forces, an infant or a child will become so heavy it is not possible to hold it during a crash. For example, in a crash at only 40 km/h (25 mph), a 5.5 kg (12 lb) infant will suddenly become a 110 kg (240 lb) force on a person's arms. An infant should be secured in an appropriate restraint.

⚠ Warning

Children who are up against, or very close to, any airbag when it inflates can be seriously injured or killed. Never put a rear-facing child restraint in the right front seat. Secure a rear-facing child restraint in a rear seat. It is also better to secure a forward-facing child restraint in a rear seat. If you must secure a forward-facing child restraint in the right front

(Continued)

Warning (Continued)

seat, always move the front passenger seat as far back as it will go.

Q: What are the different types of add-on child restraints?

A: Add-on child restraints, which are purchased by the vehicle owner, are available in four basic types. Selection of a particular restraint should take into consideration not only the child's weight, height, and age but also whether or not the restraint will be compatible with the motor vehicle in which it will be used.

For most basic types of child restraints, there are many different models available. When purchasing a child restraint, be sure it is designed to be used in a motor vehicle. If it is, the restraint will have a label saying that it meets federal motor vehicle safety standards.

The restraint manufacturer instructions that come with the restraint state the weight and height limitations for a particular child restraint. In addition, there are many kinds of restraints available for children with special needs.

⚠ Warning

To reduce the risk of neck and head injury during a crash, infants need complete support. In a crash, if an infant is in a rear-facing child restraint, the crash forces can be distributed across the strongest part of an infant's body, the back and shoulders. Infants should always be secured in rear-facing child restraints.

⚠ Warning

A young child's hip bones are still so small that the vehicle's regular safety belt may not remain low on the hip bones, as it should. Instead, it may settle up around the child's abdomen. In a crash, the belt would apply force on a body area that is unprotected by any bony structure. This alone could cause serious or fatal injuries. To reduce the risk of serious or fatal injuries during a crash, young children should always be secured in appropriate child restraints.

Child Restraint Systems

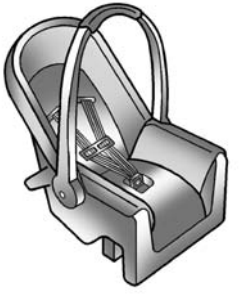

Rear-Facing Infant Seat

A rear-facing infant seat provides restraint with the seating surface against the back of the infant.

The harness system holds the infant in place and, in a crash, acts to keep the infant positioned in the restraint.

Forward-Facing Child Seat

A forward-facing child seat provides restraint for the child's body with the harness.

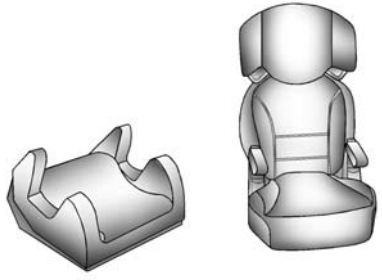

Booster Seats

A booster seat is a child restraint designed to improve the fit of the vehicle's safety belt system.
A booster seat can also help a child to see out the window.

Securing an Add-On Child Restraint in the Vehicle

⚠ Warning

A child can be seriously injured or killed in a crash if the child restraint is not properly secured in the vehicle. Secure the child restraint properly in the vehicle using the vehicle safety belt or LATCH system, following the instructions that came with that child restraint and the instructions in this manual.

To help reduce the chance of injury, the child restraint must be secured in the vehicle. Child restraint systems must be secured in vehicle seats by lap belts or the lap belt portion of a lap-shoulder belt, or by the LATCH system. See *Lower Anchors and Tethers for Children (LATCH System) on page 3-43*.

Children can be endangered in a crash if the child restraint is not properly secured in the vehicle.

When securing an add-on child restraint, refer to the instructions that come with the restraint which may be on the restraint itself or in a booklet, or both, and to this manual. The child restraint instructions are important, so if they are not available, obtain a replacement copy from the manufacturer.

Keep in mind that an unsecured child restraint can move around in a collision or sudden stop and injure people in the vehicle. Be sure to properly secure any child restraint in the vehicle — even when no child is in it.

In some areas of the United States and Canada, Certified Child Passenger Safety Technicians (CPSTs) are available to inspect and demonstrate how to correctly use and install child restraints. In the U.S., refer to the National Highway Traffic Safety Administration (NHTSA) website to locate the nearest child safety seat inspection station. For CPST availability in Canada, check with Transport Canada or the Provincial Ministry of Transportation office.

Securing the Child Within the Child Restraint

⚠ Warning

A child can be seriously injured or killed in a crash if the child is not properly secured in the child restraint. Secure the child properly following the instructions that came with that child restraint.

Where to Put the Restraint

According to accident statistics, children and infants are safer when properly restrained in a child restraint system or infant restraint system secured in a rear seating position.

Whenever possible, children aged 12 and under should be secured in a rear seating position.

Never put a rear-facing child seat in the front. This is because the risk to the rear-facing child is so great if the airbag deploys.

⚠ Warning

A child in a rear-facing child restraint can be seriously injured or killed if the front passenger airbag inflates. This is because the back of the rear-facing child restraint would be very close to the inflating airbag. A child in a forward-facing child restraint can be seriously injured or killed if the front passenger airbag inflates and the passenger seat is in a forward position.

Even if the passenger sensing system has turned off the front passenger frontal airbag, no

(Continued)

Warning (Continued)

system is fail-safe. No one can guarantee that an airbag will not deploy under some unusual circumstance, even though it is turned off.

Secure rear-facing child restraints in a rear seat, even if the airbag is off. If you secure a forward-facing child restraint in the front seat, always move the front passenger seat as far back as it will go. It is better to secure the child restraint in a rear seat.

See *Passenger Sensing System on page 3-30* for additional information.

When securing a child restraint in a rear seating position, study the instructions that came with the child restraint to make sure it is compatible with this vehicle.

Child restraints and booster seats vary considerably in size, and some may fit in certain seating positions better than others. Always make sure the child restraint is properly secured.

Depending on where you place the child restraint and the size of the child restraint, you may not be able to access adjacent safety belt assemblies or LATCH anchors for additional passengers or child restraints. Adjacent seating positions should not be used if the child restraint prevents access to or interferes with the routing of the safety belt.

Wherever a child restraint is installed, be sure to secure the child restraint properly.

Keep in mind that an unsecured child restraint can move around in a collision or sudden stop and injure people in the vehicle. Be sure to properly secure any child restraint in the vehicle — even when no child is in it.

Lower Anchors and Tethers for Children (LATCH System)

The LATCH system secures a child restraint during driving or in a crash. LATCH attachments on the child restraint are used to attach the child restraint to the anchors in the vehicle. The LATCH system is designed to make installation of a child restraint easier.

In order to use the LATCH system in your vehicle, you need a child restraint that has LATCH attachments. LATCH-compatible rear-facing and forward-facing child seats can be properly installed using either the LATCH anchors or the vehicle's safety belts. Do not use both the safety belts and the LATCH anchorage system to secure a rear-facing or forward-facing child seat.

Booster seats use the vehicle's safety belts to secure the child in the booster seat. If the manufacturer

recommends that the booster seat be secured with the LATCH system, this can be done as long as the booster seat can be positioned properly and there is no interference with the proper positioning of the lap-shoulder belt on the child.

Make sure to follow the instructions that came with the child restraint, and also the instructions in this manual.

When installing a child restraint with a top tether, you must also use either the lower anchors or the safety belts to properly secure the child restraint. A child restraint must never be installed using only the top tether and anchor.

The LATCH anchorage system can be used until the combined weight of the child plus the child restraint is 29.5 kg (65 lbs). Use the safety belt alone instead of the LATCH anchorage system once the combined weight is more than 29.5 kg (65 lbs).

The following explains how to attach a child restraint with these attachments in the vehicle.

Not all vehicle seating positions or child restraints have lower anchors and attachments or top tether anchors and attachments.

Lower Anchors

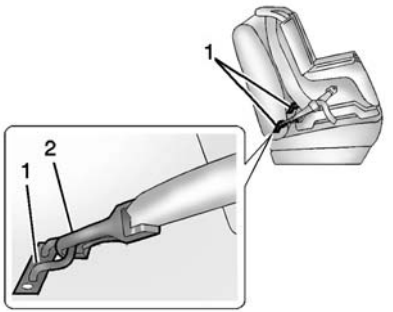

Lower anchors (1) are metal bars built into the vehicle. There are two lower anchors for each LATCH seating position that will accommodate a child restraint with lower attachments (2).

Top Tether Anchor

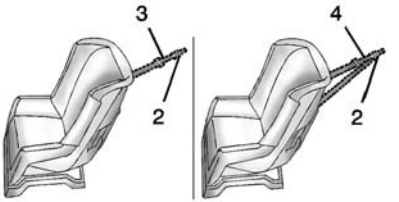

A top tether (3, 4) anchors the top of the child restraint to the vehicle. A top tether anchor is built into the vehicle. The top tether attachment (2) on the child restraint connects to the top tether anchor in the vehicle in order to reduce the forward movement and rotation of the child restraint during driving or in a crash.

The child restraint may have a single tether (3) or a dual tether (4). Either will have a single attachment (2) to secure the top tether to the anchor.

Some child restraints with top tethers are designed for use with or without the top tether being attached. Others require the top tether always to be attached. In Canada, the law requires that forward-facing child restraints have a top tether, and that the tether be attached. Be sure to read and follow the instructions for your child restraint.

Lower Anchor and Top Tether Anchor Locations

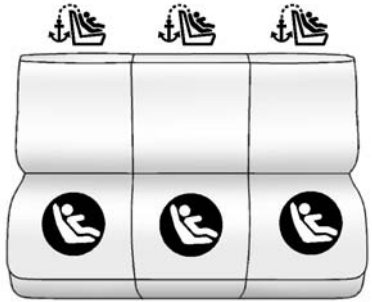

Rear Seat

(Top Tether Anchor): Seating positions with top tether anchors.

(Lower Anchor): Seating positions with two lower anchors.

To assist in locating the lower anchors, each seating position with lower anchors has two labels, near the crease between the seatback and the seat cushion.

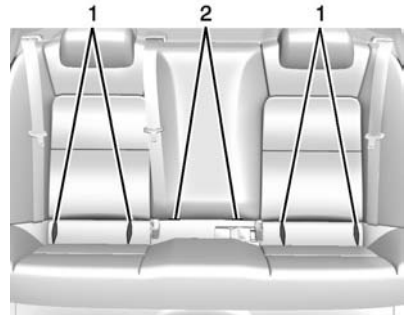

1. Outboard Lower Anchors
2. Center Lower Anchors

The outboard lower anchors (1) are behind the vertical openings in the seat trim. Pull the cover down to access the anchors. The center lower anchors (2) are in the crease between the seatback and the seat cushion.

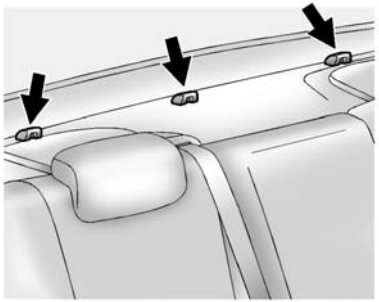

The top tether anchors are on the rear seatback filler panel. Be sure to use an anchor on the same side of the vehicle as the seating position where the child restraint will be placed.

Do not secure a child restraint in a position without a top tether anchor if a national or local law requires that the top tether be attached, or if the instructions that come with the child restraint say that the top tether must be attached.

According to accident statistics, children and infants are safer when properly restrained in a child restraint system or infant restraint system secured in a rear seating position. See *Where to Put the Restraint on page 3-42* for additional information.

Securing a Child Restraint Designed for the LATCH System

⚠ Warning

If a LATCH-type child restraint is not attached to anchors, the child restraint will not be able to protect the child correctly. In a crash, the child could be seriously injured or killed. Install a LATCH-type child restraint properly using the anchors, or use the vehicle safety belts to secure the restraint, following the instructions that came with the child restraint and the instructions in this manual.

⚠ Warning

Do not attach more than one child restraint to a single anchor. Attaching more than one child restraint to a single anchor could cause the anchor or attachment to come loose or even break during a crash. A child or others could be injured. To reduce the risk of serious or fatal injuries during a crash, attach only one child restraint per anchor.

⚠ Warning

Children can be seriously injured or strangled if a shoulder belt is wrapped around their neck and the safety belt continues to tighten. Buckle any unused safety belts behind the child restraint so children cannot reach them. Pull the shoulder belt all the way out

(Continued)

Warning (Continued)

of the retractor to set the lock, if the vehicle has one, after the child restraint has been installed.

⚠ Caution

Do not let the LATCH attachments rub against the vehicle's safety belts. This may damage these parts. If necessary, move buckled safety belts to avoid rubbing the LATCH attachments.

If you need to secure more than one child restraint in the rear seat, see *Where to Put the Restraint on page 3-42*.

This system is designed to make the installation of child restraints easier. When using lower anchors, do not use the vehicle's safety belts. Instead, use the vehicle's anchors and child restraint attachments to secure the restraints. Some restraints also use another vehicle anchor to secure a top tether.

1. Attach and tighten the lower attachments to the lower anchors. If the child restraint does not have lower attachments or the desired seating position does not have lower anchors, secure the child restraint with the top tether and the safety belts. Refer to your child restraint manufacturer instructions and the instructions in this manual.
   1.1. Find the lower anchors for the desired seating position.
   1.2. Put the child restraint on the seat.
   1.3. Attach and tighten the lower attachments on the child restraint to the lower anchors.
2. If the child restraint manufacturer recommends that the top tether be attached, attach and tighten the top tether to the top tether anchor, if equipped. Refer to the child restraint instructions and the following steps:
   2.1. Find the top tether anchor.
   2.2. Route, attach, and tighten the top tether according to your child restraint instructions and the following instructions:

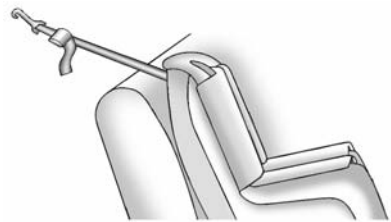

If the position you are using does not have a head restraint and you are using a single tether, route the tether over the seatback.

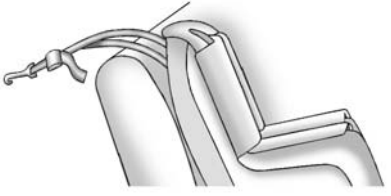

If the position you are using does not have a head restraint and you are using a dual tether, route the tether over the seatback.

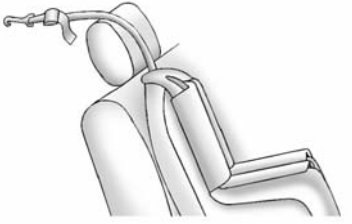

If the position you are using has a fixed head restraint and you are using a single tether, route the tether over the head restraint.

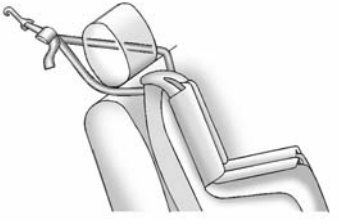

If the position you are using has a fixed head restraint and you are using a dual tether, route the tether around the head restraint.

3. Before placing a child in the child restraint, make sure it is securely held in place. To check, grasp the child restraint at the LATCH path and attempt to move it side to side and back and forth. There should be no more than 2.5 cm (1 in) of movement for proper installation.

Replacing LATCH System Parts After a Crash

⚠ Warning

A crash can damage the LATCH system in the vehicle. A damaged LATCH system may not properly secure the child restraint, resulting in serious injury or even death in a crash. To help make sure the LATCH system is working properly after a crash, see your dealer to have the system inspected and any necessary replacements made as soon as possible.

If the vehicle has the LATCH system and it was being used during a crash, new LATCH system parts may be needed.

New parts and repairs may be necessary even if the LATCH system was not being used at the time of the crash.

Securing Child Restraints (Rear Seat)

When securing a child restraint in a rear seating position, study the instructions that came with the child restraint to make sure it is compatible with this vehicle.

If the child restraint has the LATCH system, see *Lower Anchors and Tethers for Children (LATCH System) on page 3-43* for how and where to install the child restraint using LATCH. If a child restraint is secured in the vehicle using a safety belt and it uses a top tether, see *Lower Anchors and Tethers for Children (LATCH System) on page 3-43* for top tether anchor locations.

Do not secure a child seat in a position without a top tether anchor if a national or local law requires that the top tether be anchored, or if the instructions that come with the child restraint say that the top strap must be anchored.

In Canada, the law requires that forward-facing child restraints have a top tether, and that the tether be attached.

If the child restraint does not have the LATCH system, you will be using the safety belt to secure the child restraint in this position. Be sure to follow the instructions that came with the child restraint. Secure the child in the child restraint when and as the instructions say.

If more than one child restraint needs to be installed in the rear seat, be sure to read *Where to Put the Restraint on page 3-42*.

1. Put the child restraint on the seat.
2. Pick up the latch plate, and run the lap and shoulder portions of the vehicle safety belt through or around the restraint. The child restraint instructions will show you how.

3. Push the latch plate into the buckle until it clicks.

   Position the release button on the buckle so that the safety belt could be quickly unbuckled if necessary.

4. Pull the shoulder belt all the way out of the retractor to set the lock. When the retractor lock is set, the belt can be tightened but not pulled out of the retractor.

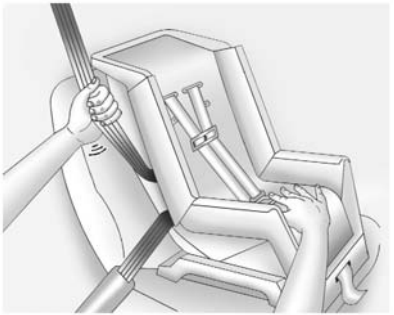

5. To tighten the belt, push down on the child restraint, pull the shoulder portion of the belt to tighten the lap portion of the belt, and feed the shoulder belt back into the retractor. When installing a forward-facing child restraint, it may be helpful to use your knee to push down on the child restraint as you tighten the belt.

   Try to pull the belt out of the retractor to make sure the retractor is locked. If the retractor is not locked, repeat Steps 4 and 5.

6. If the child restraint has a top tether, follow the child restraint manufacturer's instructions regarding the use of the top tether. See *Lower Anchors and Tethers for Children (LATCH System) on page 3-43* for more information.
7. Before placing a child in the child restraint, make sure it is securely held in place. To check, grasp the child restraint at the safety belt path and attempt to move it side to side and back and forth. When the child restraint is properly installed, there should be no more than 2.5 cm (1 in) of movement.

To remove the child restraint, unbuckle the vehicle safety belt and let it return to the stowed position. If the top tether is attached to a top tether anchor, disconnect it.

Securing Child Restraints (Front Outboard Passenger Seat)

This vehicle has airbags. A rear seat is a safer place to secure a forward-facing child restraint. See *Where to Put the Restraint on page 3-42*.

In addition, the vehicle has a passenger sensing system which is designed to turn off the front outboard passenger frontal airbag and knee airbag under certain conditions. See *Passenger Sensing System on page 3-30* and *Passenger Airbag Status Indicator on page 5-9* for more information, including important safety information.

Never put a rear-facing child seat in the front. This is because the risk to the rear-facing child is so great, if the airbag deploys.

⚠ Warning

A child in a rear-facing child restraint can be seriously injured or killed if the passenger frontal airbag inflates. This is because the back of the rear-facing child restraint would be very close to the inflating airbag. A child in a forward-facing child restraint can be seriously injured or killed if the passenger frontal airbag inflates and the passenger seat is in a forward position.

Even if the passenger sensing system has turned off the front outboard passenger airbag(s), no system is fail-safe. No one can guarantee that an airbag will not inflate under some unusual circumstance, even though the airbag(s) are off.

(Continued)

Warning (Continued)

Secure rear-facing child restraints in a rear seat, even if the airbag(s) are off. If you secure a forward-facing child restraint in the front outboard passenger seat, always move the seat as far back as it will go. It is better to secure the child restraint in a rear seat.

If the child restraint has the LATCH system, see *Lower Anchors and Tethers for Children (LATCH System) on page 3-43* for how and where to install the child restraint using LATCH. If a child restraint is secured using a safety belt and it uses a top tether, see for top tether anchor locations.

Do not secure a child seat in a position without a top tether anchor if a national or local law requires that the top tether be anchored, or if the instructions that come with the child restraint say that the top strap must be anchored.

In Canada, the law requires that forward-facing child restraints have a top tether, and that the tether be attached.

You will be using the lap-shoulder belt to secure the child restraint in this position. Follow the instructions that came with the child restraint.

1. Move the seat as far back as it will go before securing the forward-facing child restraint.

   When the passenger sensing system has turned off the front outboard passenger frontal and knee airbags, the off indicator on the passenger airbag status indicator should light and stay lit when the vehicle is started. See *Passenger Airbag Status Indicator on page 5-9*.

2. Put the child restraint on the seat.

3. Pick up the latch plate, and run the lap and shoulder portions of the vehicle's safety belt through or around the restraint. The child restraint instructions will show you how.

4. Push the latch plate into the buckle until it clicks.

   Position the release button on the buckle so that the safety belt could be quickly unbuckled if necessary.

5. Pull the shoulder belt all the way out of the retractor to set the lock. When the retractor lock is set, the belt can be tightened but not pulled out of the retractor.

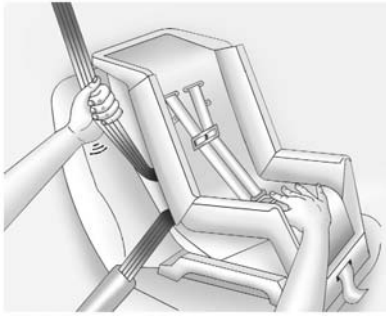

6. To tighten the belt, push down on the child restraint, pull the shoulder portion of the belt to tighten the lap portion of the belt, and feed the shoulder belt back into the retractor. When installing a forward-facing child restraint, it may be helpful to use your knee to push down on the child restraint as you tighten the belt.

   Try to pull the belt out of the retractor to make sure the retractor is locked. If the retractor is not locked, repeat Steps 5 and 6.

7. Before placing a child in the child restraint, make sure it is securely held in place. To check, grasp the child restraint at the safety belt path and attempt to move it side to side and back and forth. When the child restraint is properly installed, there should be no more than 2.5 cm (1 in) of movement.

If the airbags are off, the off indicator in the passenger airbag status indicator will come on and stay on when the vehicle is started.

If a child restraint has been installed and the on indicator is lit, see “If the On Indicator Is Lit for a Child Restraint” under *Passenger Sensing System on page 3-30* for more information.

To remove the child restraint, unbuckle the vehicle safety belt and let it return to the stowed position.

✍ NOTES

Storage

Storage Compartments

Storage Compartments 4-1
Glove Box 4-1

Storage Compartments

⚠ Warning

Do not store heavy or sharp objects in storage compartments. In a crash, these objects may cause the cover to open and could result in injury.

Glove Box

Lift up on the glove box lever to open it.

✍ NOTES

Instruments and Controls

Controls

Steering Wheel Adjustment . . . 5-2
Steering Wheel Controls 5-2
Horn 5-2
Windshield Wiper/Washer 5-3
Clock 5-3
Power Outlets 5-4

Warning Lights, Gauges, and Indicators

Warning Lights, Gauges, and Indicators 5-5
Instrument Cluster 5-6
Speedometer 5-7
Odometer 5-7
Trip Odometer 5-7
Tachometer 5-7
Fuel Gauge 5-7
Safety Belt Reminders 5-8
Airbag Readiness Light 5-9
Passenger Airbag Status Indicator 5-9
Charging System Light 5-10
Malfunction Indicator Lamp 5-10
Service Vehicle Soon Light 5-13
Brake System Warning Light 5-13
Parking Brake Light 5-14
Antilock Brake System (ABS) Warning Light 5-14
Sport Mode Light 5-14
Traction Off Light 5-14
StabiliTrak® OFF Light 5-15
Traction Control System (TCS)/StabiliTrak® Light 5-15
Tire Pressure Light 5-16
Engine Oil Pressure Light 5-16
Low Fuel Warning Light 5-16
Security Light 5-17
High-Beam On Light 5-17
Lamps On Reminder 5-17
Cruise Control Light 5-17
Door Ajar Light 5-18

Information Displays

Driver Information Center (DIC) 5-18

Vehicle Messages

Vehicle Messages 5-21
Battery Voltage and Charging Messages 5-21
Brake System Messages 5-22
Cruise Control Messages 5-22
Door Ajar Messages 5-22
Engine Cooling System Messages 5-22
Engine Oil Messages 5-23
Engine Power Messages 5-23
Fuel System Messages 5-24
Key and Lock Messages 5-24
Lamp Messages 5-24
Ride Control System Messages 5-24
Security Messages 5-24
Service Vehicle Messages . . . 5-24
Tire Messages 5-25
Transmission Messages 5-25
Vehicle Reminder Messages 5-26
Washer Fluid Messages 5-26

Vehicle Personalization

Vehicle Personalization 5-26

Controls

Steering Wheel Adjustment

To adjust the steering wheel:

1. Pull the lever down.
2. Move the steering wheel up or down and in or out for a comfortable position.
3. Pull the lever up to lock the steering wheel in place.

Do not adjust the tilt and telescope lever while driving.

Steering Wheel Controls

Some audio functions can be controlled through the steering wheel controls.

/ (Push to Talk): Press to interact with Bluetooth or voice recognition. See *Bluetooth on page 7-28* or *Voice Recognition on page 7-25*.

/ (Mute/End Call): Press to decline an incoming call, or to end a current call. Press to silence the vehicle speakers while using the infotainment system. Press again to turn the sound on. Press to cancel voice recognition.

SRC (Thumbwheel Control): Press to select an audio source.

Use the thumbwheel to select the next or previous favorite radio station, CD track, MP3 track, and Bluetooth Audio track.

+ − (Volume): Press + to increase the volume. Press − to decrease.

Horn

Press on the steering wheel pad to sound the horn. See *Wiring Provisions for Horn/Siren Circuit - SEO 6J4 on page 15-14* (If Equipped).

Windshield Wiper/Washer

With the ignition in ACC/ACCESSORY or ON/RUN/START, move the windshield wiper lever to select the wiper speed.

HI: Use for fast wipes.

LO: Use for slow wipes.

INT (Intermittent Wipes): Move the lever up to INT for intermittent wipes, then turn the INT band up for more frequent wipes or down for less frequent wipes.

OFF: Use to turn the wipers off.

(Mist): For a single wipe, briefly move the wiper lever down. For several wipes, hold the wiper lever down.

Clear snow and ice from the wiper blades and windshield before using them. If frozen to the windshield, carefully loosen or thaw them. Damaged blades should be replaced. See *Wiper Blade Replacement on page 10-25*.

Heavy snow or ice can overload the wiper motor.

(Windshield Washer): Pull the windshield wiper lever toward you to spray windshield washer fluid and activate the wipers. The wipers will continue until the lever is released or the maximum wash time is reached. When the windshield wiper lever is released, additional wipes may occur depending on how long the windshield washer had been activated. See *Washer Fluid on page 10-20* for information on filling the windshield washer fluid reservoir.

⚠ Warning

In freezing weather, do not use the washer until the windshield is warmed. Otherwise the washer fluid can form ice on the windshield, blocking your vision.

Clock

Time and Date

1. Press HOME on the radio faceplate.
2. Press the Config screen button on the Home Page.
3. Select Time and Date.
4. Select the desired setting to change.

Set Time: Press + or − to increase or decrease the hours and minutes.

If auto timing is set, the time displayed on the clock may not update immediately when driving into a new time zone.

Set Date: Press + or − to increase or decrease the year, month, and day.

12hr/24hr Format: Press to select 12 hour or 24 hour time format.

Press the Back screen button to save.

Power Outlets

The accessory power outlets can be used to plug in electrical equipment, such as a cell phone or MP3 player.

The vehicle has an accessory power outlet on the center stack under the climate controls.

To use the outlet, the ignition must be in ON/RUN or ACC/ ACCESSORY. Remove the cover to access the outlet and replace when not in use.

⚠ Caution

Leaving electrical equipment on for extended periods will drain the battery. Always turn off electrical equipment when not in use and do not plug in equipment that exceeds the maximum amperage rating.

This circuit is protected by a fuse and has a maximum current level. Do not use equipment exceeding the maximum amperage rating.

Certain power accessory plugs may not be compatible with the accessory power outlet and could overload vehicle or adapter fuses. If a problem is experienced, see your dealer.

⚠ Caution

Adding any electrical equipment to the vehicle may damage it or keep other components from working as they should. The repairs would not be covered by the vehicle warranty. Do not use equipment exceeding maximum amperage rating of 10 amperes. Check with your dealer before adding electrical equipment.

When adding electrical equipment, be sure to follow the proper installation instructions included with the equipment. See *Add-On Electrical Equipment on page 9-35*.

⚠ Caution

Hanging heavy equipment from the power outlet can cause damage not covered by the vehicle warranty. The power outlets are designed for accessory power plugs only, such as cell phone charge cords.

Warning Lights, Gauges, and Indicators

Warning lights and gauges can signal that something is wrong before it becomes serious enough to cause an expensive repair or replacement. Paying attention to the warning lights and gauges could prevent injury.

Warning lights come on when there could be a problem with a vehicle function. Some warning lights come on briefly when the engine is started to indicate they are working.

Gauges can indicate when there could be a problem with a vehicle function. Often gauges and warning lights work together to indicate a problem with the vehicle.

When one of the warning lights comes on and stays on while driving, or when one of the gauges shows there may be a problem, check the section that explains what to do. Follow this manual's advice. Waiting to do repairs can be costly and even dangerous.

Instrument Cluster

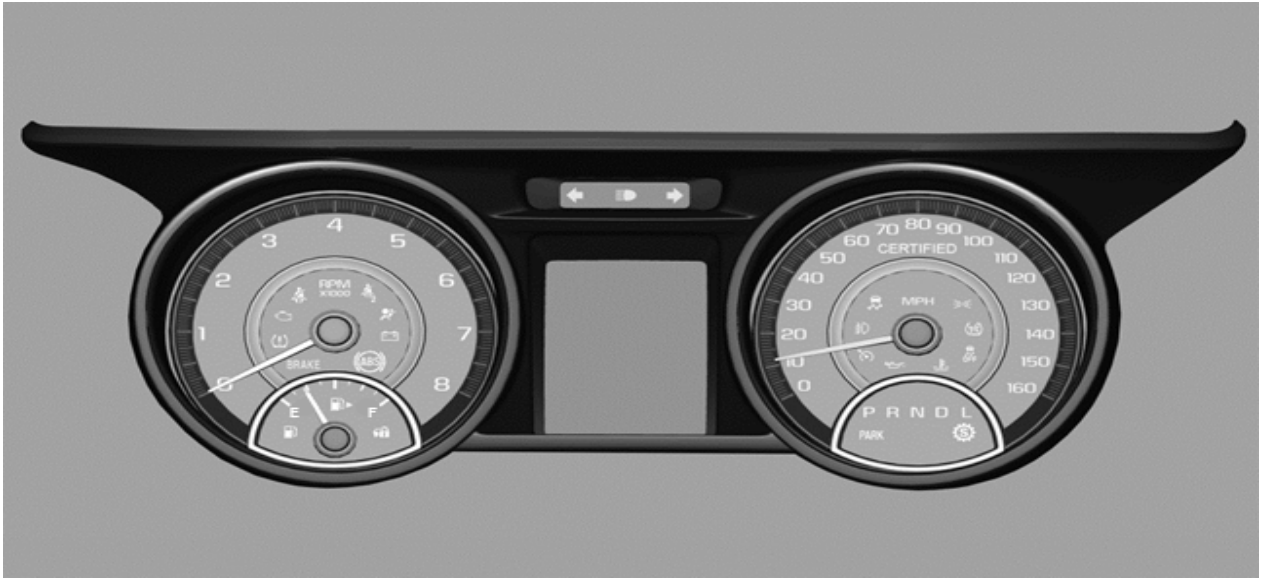

Speedometer

The speedometer shows the vehicle's speed in either kilometers per hour (km/h) or miles per hour (mph).

The words “CERTIFIED SPEEDOMETER” are embossed on the speedometer face.

Odometer

The odometer shows how far the vehicle has been driven, in either kilometers or miles.

Trip Odometer

The trip odometer can show how far the vehicle has been driven since the trip odometer was last reset.

The trip odometer is accessed and reset through the Driver Information Center (DIC). See *Driver Information Center (DIC) on page 5-18*.

Tachometer

The tachometer displays the engine speed in revolutions per minute (rpm).

⚠ Caution

If the engine is operated with the tachometer in the shaded warning area, the vehicle could be damaged, and the damages would not be covered by the vehicle warranty. Do not operate the engine with the tachometer in the shaded warning area.

Fuel Gauge

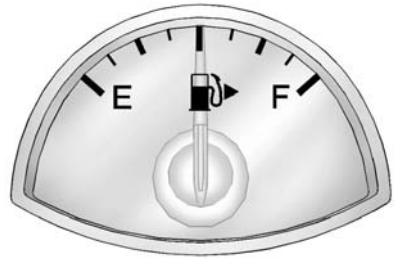

When the ignition is on, the fuel gauge shows how much fuel is left in the fuel tank. When the indicator nears empty, a message in the Driver Information Center (DIC) displays. See *Fuel System Messages on page 5-24*. The vehicle still has a little fuel left, but the vehicle should be fueled soon. An arrow on the fuel gauge indicates the side of the vehicle the fuel door is on.

Here are four things that some owners ask about. These are normal and do not indicate a problem with the fuel gauge:

- At the service station, the gas pump shuts off before the gauge reads full.
- It takes a little more or less fuel to fill up than the gauge indicated. For example, the gauge may have indicated the fuel tank was half full, but it actually took a little more or less than half the fuel tank's capacity to fill it.
- The indicator moves a little while turning a corner or speeding up.
- The gauge goes back to empty when the ignition is turned off.

Safety Belt Reminders

Driver Safety Belt Reminder Light

There is a driver safety belt reminder light on the instrument cluster.

When the vehicle is started, this light flashes and a chime may come on to remind the driver to fasten their safety belt. Then the light stays on solid until the belt is buckled. This cycle may continue several times if the driver remains or becomes unbuckled while the vehicle is moving.

If the driver safety belt is buckled, neither the light nor the chime comes on.

Passenger Safety Belt Reminder Light

There is a passenger safety belt reminder light near the passenger airbag status indicator. See *Passenger Sensing System on page 3-30*.

When the vehicle is started, this light flashes and a chime may come on to remind passengers to fasten their safety belt. Then the light stays on solid until the belt is buckled. This cycle continues several times if the passenger remains or becomes unbuckled while the vehicle is moving.

If the passenger safety belt is buckled, neither the chime nor the light comes on.

The front passenger safety belt warning light and chime may turn on if an object is put on the seat such as a briefcase, handbag, grocery bag, laptop, or other electronic device. To turn off the warning light and/or chime, remove the object from the seat or buckle the safety belt.

Airbag Readiness Light

This light shows if there is an electrical problem with the airbag system. The system check includes the airbag sensor(s), passenger sensing system, the pretensioners, the airbag modules, the wiring, and the crash sensing and diagnostic module. For more information on the airbag system, see *Airbag System on page 3-12*.

The airbag readiness light comes on for several seconds when the vehicle is started. If the light does not come on then, have it fixed immediately.

⚠ Warning

If the airbag readiness light stays on after the vehicle is started or comes on while driving, it means the airbag system might not be working properly. The airbags in the vehicle might not inflate in a crash, or they could even inflate without a crash. To help avoid injury, have the vehicle serviced right away.

Passenger Airbag Status Indicator

The vehicle has a passenger sensing system. See *Passenger Sensing System on page 3-30* for important safety information. The passenger airbag status indicator is in the overhead console.

When the vehicle is started, the passenger airbag status indicator will light ON and OFF for several seconds as a system check. Then, after several more seconds, the status indicator will light either ON or OFF to let you know the status of the front outboard passenger frontal airbag and knee airbag.

If the word ON is lit on the passenger airbag status indicator, it means that the front outboard passenger frontal airbag and knee airbag are allowed to inflate.

If the word OFF is lit on the airbag status indicator, it means that the passenger sensing system has

turned off the front outboard passenger frontal airbag and knee airbag.

If, after several seconds, both status indicator lights remain on, or if there are no lights at all, there may be a problem with the lights or the passenger sensing system. See your dealer for service.

⚠ Warning

If the airbag readiness light ever comes on and stays on, it means that something may be wrong with the airbag system. To help avoid injury to yourself or others, have the vehicle serviced right away. See *Airbag Readiness Light on page 5-9* for more information, including important safety information.

Charging System Light

The charging system light comes on briefly when the ignition is turned on, but the engine is not running, as a check to show the light is working. The light turns off when the engine is started. If it does not, have the vehicle serviced by your dealer.

If the light stays on, or comes on while driving, there could be a problem with the electrical charging system. Have it checked by your dealer. Driving while this light is on could drain the battery.

If a short distance must be driven with the light on, be sure to turn off all accessories, such as the radio and air conditioner.

Malfunction Indicator Lamp

A computer system called OBD II (On-Board Diagnostics-Second Generation) monitors the operation of the vehicle to ensure emissions are at acceptable levels, helping to maintain a clean environment. The malfunction indicator lamp comes on when the vehicle is placed in ON/RUN, as a check to show it is working. If it does not, have the vehicle serviced by your dealer. See *Ignition Positions on page 9-14* for more information.

If the malfunction indicator lamp comes on while the engine is running, this indicates that the OBD

II system has detected a problem and diagnosis and service might be required.

Malfunctions often are indicated by the system before any problem is apparent. Being aware of the light can prevent more serious damage to the vehicle. This system also assists the service technician in correctly diagnosing any malfunction.

⚠ Caution

If the vehicle is continually driven with this light on, the emission controls might not work as well, the vehicle fuel economy might not be as good, and the engine might not run as smoothly. This could lead to costly repairs that might not be covered by the vehicle warranty.

⚠ Caution

Modifications made to the engine, transmission, exhaust, intake, or fuel system of the vehicle or the replacement of the original tires with other than those of the same Tire Performance Criteria (TPC) can affect the vehicle's emission controls and can cause this light to come on. Modifications to these systems could lead to costly repairs not covered by the vehicle warranty. This could also result in a failure to pass a required Emission Inspection/Maintenance test. See *Accessories and Modifications on page 10-2*.

This light comes on during a malfunction in one of two ways:

Light Flashing: A misfire condition has been detected. A misfire increases vehicle emissions and could damage the emission control system on the vehicle. Diagnosis and service might be required.

To prevent more serious damage to the vehicle:

- Reduce vehicle speed.
- Avoid hard accelerations.
- Avoid steep uphill grades.

If the light continues to flash, find a safe place to stop and park the vehicle. Turn the vehicle off, wait at least 10 seconds, and restart the engine. If the light is still flashing, follow the previous steps and see your dealer for service as soon as possible.

Light On Steady: An emission control system malfunction has been detected on the vehicle. Diagnosis and service might be required.

The following may correct an emission control system malfunction:

- Check that the fuel cap is fully installed. See *Filling the Tank on page 9-33*. The diagnostic system can determine if the fuel cap has been left off or improperly installed. A loose or missing fuel cap allows fuel to evaporate into the atmosphere. A few driving trips with the cap properly installed should turn the light off.
- Check that good quality fuel is used. Poor fuel quality causes the engine not to run as efficiently as designed and may cause stalling after start-up, stalling when the vehicle is changed into gear, misfiring, hesitation on acceleration, or stumbling on acceleration. These conditions might go away once the engine is warmed up.

If one or more of these conditions occurs, change the fuel brand used. It may require at least one full tank of the proper fuel to turn the light off.

See *Recommended Fuel on page 9-30*.

If none of the above have made the light turn off, your dealer can check the vehicle. The dealer has the proper test equipment and diagnostic tools to fix any mechanical or electrical problems that might have developed.

Emissions Inspection and Maintenance Programs

Depending on where you live, your vehicle may be required to participate in an emission control system inspection and maintenance program. For the inspection, the emission system test equipment will likely connect to the vehicle's Data Link Connector (DLC).

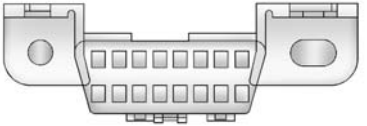

The DLC is under the instrument panel to the left of the steering wheel. See your dealer if assistance is needed.

The vehicle may not pass inspection if:

- The malfunction indicator lamp is on with the engine running, or if the light does not come on when the ignition is turned to ON/RUN while the engine is off. See your dealer for assistance in verifying proper operation of the malfunction indicator lamp.
- The OBD II (On-Board Diagnostics) system determines that critical emission control systems have not been completely diagnosed. The vehicle would be considered not ready for inspection. This can

happen if the 12-volt battery has recently been replaced or run down. The diagnostic system is designed to evaluate critical emission control systems during normal driving. This can take several days of routine driving. If this has been done and the vehicle still does not pass the inspection for lack of OBD II system readiness, your dealer can prepare the vehicle for inspection.

Service Vehicle Soon Light

For vehicles with this light, it comes on if a condition exists that may require the vehicle to be taken in for service.

If the light comes on, take the vehicle to your dealer for service as soon as possible.

Brake System Warning Light

The vehicle brake system consists of two hydraulic circuits. If one circuit is not working, the remaining circuit can still work to stop the vehicle. For normal braking performance, both circuits need to be working.

If the warning light comes on, there is a brake problem. Have the brake system inspected right away.

BRAKE

This light comes on briefly when the vehicle is turned on. If it does not come on then, have it fixed so it will be ready to warn if there is a problem.

If the light comes on and stays on, there is a base brake problem.

⚠ Warning

The brake system might not be working properly if the brake system warning light is on. Driving with the brake system warning light on can lead to a crash. If the light is still on after the vehicle has been pulled off the road and carefully stopped, have the vehicle towed for service.

Parking Brake Light

This light comes on when the parking brake is applied. If the light continues flashing after the parking brake is released, or while driving, there is a problem with the parking brake system or another system.

If the light does not come on, or remains flashing, see your dealer.

Antilock Brake System (ABS) Warning Light

This light comes on briefly when the engine is started.

If it does not, have the vehicle serviced by your dealer.

If the ABS light stays on, turn the ignition off.

If the light comes on while driving, stop as soon as it is safely possible and turn off the vehicle. Then start the engine again to reset the system. If the ABS light stays on, or comes on again while driving, the vehicle needs service. A chime may also sound when the light comes on steady.

If the ABS light is the only light on, the vehicle has regular brakes, but the antilock brakes are not functioning.

If both the ABS and the brake system warning light are on, the vehicle's antilock brakes are not functioning and there is a problem with the regular brakes. See your dealer for service.

See *Brake System Warning Light on page 5-13* and *Brake System Messages on page 5-22*.

Sport Mode Light

This light comes on when Sport Mode is selected.

Traction Off Light

This light comes on briefly while starting the engine. If it does not, have the vehicle serviced by your

dealer. If the system is working normally, the indicator light then turns off.

The traction off light comes on when the Traction Control System (TCS) and StabiliTrak have been turned off.

The StabiliTrak OFF light will also come on when StabiliTrak is turned off.

If the TCS is off, wheel spin is not limited. Adjust driving accordingly.

See *Traction Control/Electronic Stability Control on page 9-25*.

StabiliTrak® OFF Light

This light comes on briefly while starting the engine. If it does not, have the vehicle serviced by your dealer.

This light comes on when the StabiliTrak system is turned off. If StabiliTrak is off, the Traction Control System (TCS) is also off.

If the StabiliTrak and TCS are off, the system does not assist in controlling the vehicle. Turn on the TCS and the StabiliTrak systems and the warning light turns off.

See *Traction Control/Electronic Stability Control on page 9-25*.

Traction Control System (TCS)/StabiliTrak® Light

This light comes on briefly when the engine is started.

If the light does not come on, have the vehicle serviced by your dealer. If the system is working normally, the indicator light turns off.

If the light is on and not flashing, the TCS, and potentially the StabiliTrak system have been disabled. A DIC message may display. Check the DIC messages to determine which feature(s) is no longer functioning and whether the vehicle requires service.

If the indicator/warning light is on and flashing, the TCS and/or the StabiliTrak system is actively working.

See *Traction Control/Electronic Stability Control on page 9-25*.

Tire Pressure Light

For vehicles with the Tire Pressure Monitor System (TPMS), this light comes on briefly when the engine is started. It provides information about tire pressures and the TPMS.

When the Light Is On Steady

This indicates that one or more of the tires are significantly underinflated.

A Driver Information Center (DIC) tire pressure message may also display. See *Tire Messages on page 5-25*. Stop as soon as possible, and inflate the tires to the pressure value shown on the Tire and Loading Information label. See *Tire Pressure on page 10-48*.

When the Light Flashes First and Then Is On Steady

If the light flashes for about a minute and then stays on, there may be a problem with the TPMS. If the problem is not corrected, the light will come on at every ignition cycle. See *Tire Pressure Monitor Operation on page 10-50*.

Engine Oil Pressure Light

⚠ Caution

Lack of proper engine oil maintenance can damage the engine. Driving with the engine oil low can also damage the engine. The repairs would not be covered by the vehicle warranty. Check the oil level as soon as possible. Add oil if required, but if the oil level is within the operating range and the oil pressure is still low, have the vehicle serviced. Always follow the maintenance schedule for changing engine oil.

This light should come on briefly as the engine is started. If it does not come on, have the vehicle serviced by your dealer.

If the light comes on and stays on, it means that oil is not flowing through the engine properly. The vehicle could be low on oil and might have some other system problem. See your dealer.

Low Fuel Warning Light

This light is near the fuel gauge and comes on briefly when the ignition is turned on as a check to show it is working.

It also comes on when the fuel tank is low on fuel. The light turns off when fuel is added. If it does not, have the vehicle serviced.

Security Light

The security light should come on briefly as the engine is started. If it does not come on, have the vehicle serviced by your dealer. If the system is working normally, the indicator light turns off.

If the light stays on and the engine does not start, there could be a problem with the theft-deterrent system. See *Immobilizer Operation on page 2-11*.

High-Beam On Light

This light comes on when the high-beam headlamps are in use.

See *Headlamp High/Low-Beam Changer on page 6-1*.

Lamps On Reminder

This light comes on when the exterior lamps are in use. See *Exterior Lamp Controls on page 6-1*.

Cruise Control Light

For vehicles with cruise control, the cruise control light is white when the cruise control is on and ready, and turns green when the cruise control is set and active.

The light turns off when the cruise control is turned off. See *Cruise Control on page 9-27*.

Door Ajar Light

If equipped, this light comes on when a door is open or not securely latched. Before driving, check that all doors are properly closed. See *Door Ajar Messages on page 5-22*.

Information Displays

Driver Information Center (DIC)

The DIC displays information about the vehicle. It also displays warning messages if a system problem is detected. See *Vehicle Messages on page 5-21*. All messages appear in the DIC display in the center of the instrument cluster.

The vehicle may also have features that can be customized through the controls on the radio. See *Vehicle Personalization on page 5-26*.

DIC Operation and Displays

The DIC has different displays, which can be accessed by using the DIC buttons on the turn signal lever to the left of the steering wheel. The DIC displays trip, fuel, vehicle system information, and warning messages if a system problem is detected.

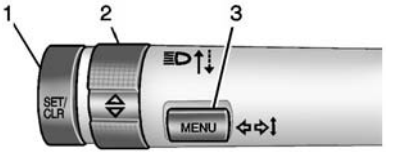

1. **SET/CLR:** Press to set, or press and hold to clear, the menu item displayed.
2. **⇕:** Use the band to scroll through the items in each menu.
3. **MENU:** Press to display the DIC menus. This button is also used to return to or exit the last screen displayed on the DIC.

Trip/Fuel Menu Items

Press MENU on the turn signal lever until Trip/Fuel Menu is displayed. Use ⇕ to scroll through the following possible menu items:

- Speedometer
- Trip
- Fuel Range
- Average Fuel Economy

- Instantaneous Fuel Economy
- Average Vehicle Speed

Speedometer

The speedometer, available on some vehicles, shows how fast the vehicle is moving in either kilometers per hour (km/h) or miles per hour (mph). The speedometer cannot be reset.

Press SET/CLR while the Speed is displayed to show Capture Speed. Turn the band clockwise to display the current Capture Speed. Turning the band counterclockwise will return to the Speed display. Press and hold SET/CLR while the Capture Speed is displayed to clear it. The Capture Speed is saved until a new speed is captured or it is cleared.

Trip

This display shows the current distance traveled in either kilometers (km) or miles (mi), since the last reset for the trip odometer. The trip odometer can be reset to zero by pressing SET/CLR while the trip odometer display is showing.

Fuel Range

This display shows the approximate distance the vehicle can be driven without refueling. The fuel range estimate is based on an average of the vehicle's fuel economy over recent driving history and the amount of fuel remaining in the fuel tank. Fuel range cannot be reset.

Average Fuel Economy

This display shows the approximate average liters per 100 kilometers (L/100 km) or miles per gallon (mpg). This number is calculated based on the number of L/100 km (mpg) recorded since the last time this menu item was reset. The fuel economy can be reset by pressing SET/CLR while the Average Fuel Economy display is showing. On some models, this display is shown on the same page with the instantaneous fuel consumption display.

Instantaneous Fuel Economy

The instantaneous fuel consumption display shows the current fuel economy in liters per 100 kilometers (L/100 km) or miles per gallon (mpg). This number reflects only the fuel economy that the vehicle has right now and changes frequently as driving conditions change. Unlike average fuel economy, this display cannot be reset. On some models, this display is shown on the same page with the average fuel economy display.

Average Vehicle Speed

This display shows the average speed of the vehicle in kilometers per hour (km/h) or miles per hour (mph). This average is calculated based on the various vehicle speeds recorded since the last reset of this value. The average speed can be reset by pressing SET/CLR while the Average Vehicle Speed display is showing.

Vehicle Information Menu Items

Press MENU on the turn signal lever until Vehicle Information menu is displayed. Use ⇕ to scroll through the following possible menu items:

- Battery Voltage
- Speed Warning
- Tire Pressure Monitoring System
- Remaining Oil Life
- Units

Battery Voltage

This display, available on some vehicles, shows the current battery voltage. If the voltage is in the normal range, the value will display. For example, the display may read Battery Voltage 15.0 Volts. The vehicle's charging system regulates voltage based on the state of the battery. The battery voltage can fluctuate while viewing this information on the DIC. This is normal. See *Charging System Light on page 5-10*. If there is a problem with the battery charging system, the DIC will display a message.

Speed Warning

This display is used to set the vehicle speed at which the speed warning chime sounds and the alert is displayed. The speed can be set by pressing SET/CLR while the speed warning display is showing.

Tire Pressure Monitoring

This display will show a vehicle with the approximate pressures of all four tires. Tire pressure is displayed in either kilopascal (kPa) or pounds per square inch (psi). See *Tire Pressure Monitor Operation on page 10-50*.

Remaining Oil Life

This display shows an estimate of the oil's remaining useful life. If 99% is displayed, that means 99% of the current oil life remains.

When the remaining oil life is low, the CHANGE ENGINE OIL SOON message will appear on the display. See *Engine Oil Messages on page 5-23*. The oil should be changed as soon as possible. See *Engine Oil on page 10-8*. In addition to the engine oil life system monitoring the oil life, additional maintenance is recommended in the Maintenance Schedule. See *Maintenance Schedule on page 11-2*.

Remember, the Oil Life display must be reset after each oil change. It will not reset itself. Also, be careful not to reset the Oil Life display accidentally at any time other than when the oil has just been changed. It cannot be reset accurately until the next oil change. To reset the engine oil life system, press SET/CLR while the Oil Life display is active. See *Engine Oil Life System on page 10-11*.

Units

Move ⇕ to switch between metric or US when the Unit display is active. Press SET/CLR to confirm the setting. This will change the displays on the cluster and DIC to either metric or English (US) measurements.

Vehicle Messages

Messages displayed on the DIC indicate the status of the vehicle or some action that may be needed to correct a condition. Multiple messages may display one after the other.

The messages that do not require immediate action can be acknowledged and cleared by pressing SET/CLR. The messages that require immediate action cannot be cleared until that action is performed. All messages should be taken seriously and clearing the messages does not correct the problem.

The following are some of the vehicle messages that may be displayed depending on your vehicle content.

Battery Voltage and Charging Messages

BATTERY SAVER ACTIVE

This message displays when the vehicle has detected that the battery voltage is dropping beyond a reasonable point. The battery saver system starts reducing features of the vehicle that may be noticed. At the point that features are disabled, this message displays. Turn off unnecessary accessories to allow the battery to recharge.

LOW BATTERY

This message is displayed when the battery voltage is low. See *Battery on page 10-22*.

SERVICE BATTERY CHARGING SYSTEM

This message is displayed when there is a fault in the battery charging system. Take the vehicle to your dealer for service.

Brake System Messages

BRAKE FLUID LOW

This message is displayed when the brake fluid level is low. See *Brake Fluid on page 10-21*.

SERVICE BRAKE ASSIST

This message may be displayed when there is a problem with the brake boost assist system. When this message is displayed, the brake boost assist motor might be heard operating and you might notice pulsation in the brake pedal. This is normal under these conditions. Take the vehicle to your dealer for service.

Cruise Control Messages

CRUISE SET TO XXX

This message displays when the cruise control is set and shows the speed it was set to. See *Cruise Control on page 9-27*.

Door Ajar Messages

DRIVER DOOR OPEN

This message will display when the driver door is open. Close the door completely.

HOOD OPEN

This message will display when the hood is open. Close the hood completely.

LEFT REAR DOOR OPEN

This message will display when the driver side rear door is open. Close the door completely.

PASSENGER DOOR OPEN

This message will display when the front passenger door is open. Close the door completely.

RIGHT REAR DOOR OPEN

This message will display when the passenger side rear door is open. Close the door completely.

TRUNK OPEN

This message will display when the trunk is open. Close the trunk completely.

Engine Cooling System Messages

A/C OFF DUE TO HIGH ENGINE TEMP

This message displays when the engine coolant becomes hotter than the normal operating temperature. To avoid added strain on a hot engine, the air conditioning compressor automatically turns off. When the coolant temperature returns to normal, the air conditioning compressor turns back on. The vehicle can continue to be driven.

If this message continues to appear, have the system repaired by your dealer as soon as possible to avoid damage to the engine.

ENGINE OVERHEATED — IDLE ENGINE

This message displays when the engine coolant temperature is too hot. Stop and allow the vehicle to idle until it cools down.

ENGINE OVERHEATED — STOP ENGINE

This message displays and a continuous chime sounds if the engine cooling system reaches unsafe temperatures for operation. Stop and turn off the vehicle as soon as it is safe to do so to avoid severe damage. This message clears when the engine has cooled to a safe operating temperature.

Engine Oil Messages

CHANGE ENGINE OIL SOON

This message displays when service is required for the vehicle. See your dealer. See *Engine Oil on page 10-8* and *Maintenance Schedule on page 11-2*.

Acknowledging the CHANGE ENGINE OIL SOON message will not reset the system. See “Remaining Oil Life” under *Driver Information Center (DIC) on page 5-18* and *Engine Oil Life System on page 10-11*.

ENGINE OIL LOW — ADD OIL

On some vehicles, this message displays when the engine oil level may be too low. Check the oil level before filling to the recommended level. If the oil is not low and this message remains on, take the vehicle to your dealer for service. See *Engine Oil on page 10-8*.

OIL PRESSURE LOW STOP ENGINE

This message displays when the vehicle's engine oil pressure is low. The oil pressure light also appears on the instrument cluster. See *Engine Oil Pressure Light on page 5-16*.

Stop the vehicle immediately, as engine damage can result from driving a vehicle with low oil pressure. Have the vehicle serviced by your dealer as soon as possible when this message is displayed.

Engine Power Messages

ENGINE POWER IS REDUCED

This message displays when the vehicle's engine power is reduced. Reduced engine power can affect the vehicle's ability to accelerate. If this message is on, but there is no reduction in performance, proceed to your destination. The performance may be reduced the next time the vehicle is driven. The vehicle may be driven at a reduced speed while this message is on, but maximum acceleration and speed may be reduced. Anytime this message stays on, the vehicle should be taken to your dealer for service as soon as possible.

Fuel System Messages

FUEL LEVEL LOW

This message displays when the vehicle is low on fuel. Refuel as soon as possible

Key and Lock Messages

REPLACE BATTERY IN REMOTE KEY

This message displays when the battery in the Remote Keyless Entry (RKE) transmitter needs to be replaced.

Lamp Messages

AUTOMATIC LIGHT CONTROL ON/OFF

This message is displayed when the automatic light control has been turned on or off. See *Automatic Headlamp System on page 6-2*.

CHECK XXX TURN SIGNAL LAMP

When one of the turn signals is out, this message displays to show which bulb needs to be replaced. See *Bulb Replacement on page 10-27* and *Replacement Bulbs on page 10-31*.

TURN SIGNAL ON

This message is displayed if the turn signal has been left on. Turn off the turn signal.

Ride Control System Messages

PERFORMANCE MODE

This message displays when the vehicle has entered performance mode. See *Traction Control/ Electronic Stability Control on page 9-25*.

SERVICE TRACTION CONTROL

This message displays when there is a problem with the Traction Control System (TCS). See *Traction Control/Electronic Stability Control on page 9-25*.

SERVICE STABILITRAK

This message displays if there is a problem with the StabiliTrak system. See *Traction Control/Electronic Stability Control on page 9-25*.

Security Messages

THEFT ATTEMPTED

This message displays if the vehicle detects a tamper condition.

Service Vehicle Messages

SERVICE AC SYSTEM

This message displays if there is a problem with the air conditioning system. Take the vehicle to your dealer for service.

SERVICE POWER STEERING

This message displays if there is a problem with the power steering system. Take the vehicle to your dealer for service.

SERVICE VEHICLE SOON

This message displays if there is a problem with the vehicle. Take the vehicle to your dealer for service.

Tire Messages

SERVICE TIRE MONITOR SYSTEM

This message displays if there is a problem with the Tire Pressure Monitor System (TPMS). See *Tire Pressure Monitor Operation on page 10-50* for more information.

TIRE LEARNING ACTIVE

This message displays when the system is learning new tires. See *Tire Pressure Monitor Operation on page 10-50* for more information.

TIRE PRESSURE LOW ADD AIR TO TIRE

On vehicles with the Tire Pressure Monitor System (TPMS), this message displays when the pressure in one or more of the vehicle's tires is low.

There is also an icon with the warning that will indicate the location of the low tire.

The low tire pressure warning light will also come on. See *Tire Pressure Light on page 5-16*.

If a tire pressure message displays, inflate the tires until the tire pressure is equal to the values shown on the Tire and Loading Information label. See *Tires on page 10-40*, *Vehicle Load Limits on page 9-9*, and *Tire Pressure on page 10-48*.

More than one tire pressure message can be received at a time. To read the other messages that may have been sent at the same time, press the SET/CLR button. The DIC also shows the tire pressure values. See *Driver Information Center (DIC) on page 5-18*.

Transmission Messages

SERVICE TRANSMISSION

This message displays if there is a problem with the transmission. See your dealer.

SHIFT TO PARK

This message displays when the transmission needs to be shifted to P (Park). This may appear when attempting to remove the key from the ignition or from the vehicle if the vehicle is not in P (Park).

TRANSMISSION HOT — IDLE ENGINE

This message displays and a chime sounds if the transmission fluid in the vehicle gets hot. Driving with the transmission fluid temperature high can cause damage to the vehicle. Stop the vehicle and let it idle to

allow the transmission to cool. This message clears when the fluid temperature reaches a safe level.

Vehicle Reminder Messages

ICE POSSIBLE DRIVE WITH CARE

This message displays when ice conditions are possible.

Washer Fluid Messages

WASHER FLUID LOW ADD FLUID

This message may display when the washer fluid level is low. See *Washer Fluid on page 10-20*.

Vehicle Personalization

Use the audio system controls to access the personalization menus for customizing vehicle features.

The following are all possible personalization features. Depending on the vehicle, some may not be available.

CONFIG (Configuration): Press to access the Configuration Settings menu.

TUNE/MENU: Press to enter menus and select menu items. Turn to scroll through the menus.

⇦ **BACK:** Press to exit or move backward in a menu.

Entering the Personalization Menus

The ignition must be in the ON position.

1. Press CONFIG.
2. Turn the TUNE/MENU knob to highlight the desired setting.
3. Press the TUNE/MENU knob to select the desired setting menu.

The following list of menu items may be available:

- Languages
- Time and Date
- Radio Settings
- Phone Settings
- Vehicle Settings

Turn the TUNE/MENU knob to highlight the menu. Press the TUNE/MENU knob to select it. Each menu is detailed in the following information.

Languages

Select Language, then select from the available language(s).

Time and Date

To adjust the time and date settings, see *Clock on page 5-3*.

Radio Settings

Select and the following may be displayed:

- Auto Volume
- Gracenote Options
- Startup Volume
- Number of Favorite Pages
- Software Version Menu

Auto Volume

When selected, this feature will automatically adjust the volume to minimize the effects of unwanted background noise that can result from changing road surfaces, driving speeds, or open windows. This feature works best at lower volume settings where background noise is typically louder than the sound system volume.

Select OFF, Low, Medium, or High.

Gracenote Options

Select to improve voice recognition and media groupings.

Select to enable or disable. See *CD Player on page 7-20*, *Auxiliary Devices on page 7-24*, and *Bluetooth Audio on page 7-24*.

Startup Volume

Select the maximum volume level at startup even if a higher volume had been set when the radio was turned off.

Number of Favorite Pages

Select to set the number of FAV pages to be displayed.

Software Version Menu

Select to display information about the system and software.

Phone Settings

For more information on phone, see “Phone” in *Bluetooth on page 7-28*.

Vehicle Settings

Select and the following may be displayed:

- Climate and Air Quality
- Comfort and Convenience
- Lighting
- Power Door Locks
- Remote Lock/Unlock/Start
- Return to Factory Settings?

Climate and Air Quality

Select and the following may be displayed:

- Auto Fan Speed

Auto Fan Speed

This feature sets the climate control fan speed to maintain the interior temperature.

Select High, Medium, or Low.

Comfort and Convenience

Select and the following may be displayed:

- Chime Volume

Chime Volume

This allows the selection of the chime volume level.

Select Normal or High.

Lighting

Select and the following may be displayed:

- Exit Lighting

Exit Lighting

This allows the selection of how long the exterior lamps stay on when leaving the vehicle when it is dark outside.

Select Off, 30 Seconds, 1 Minute, or 2 Minutes.

Power Door Locks

Select and the following may be displayed:

- Open Door Anti Lock Out
- Auto Door Lock
- Auto Door Unlock
- Delayed Door Lock

Open Door Anti Lock Out

When on, this feature will keep the driver door from locking when the door is open. If Off, the Delayed Door Lock menu will be available.

Select to turn on or off.

Auto Door Lock

This allows the selection of whether the doors will automatically lock when the vehicle is shifted out of P (Park).

Select On or Off.

Auto Door Unlock

This allows the selection of which doors will automatically unlock when the vehicle is shifted into P (Park).

Select All Doors, Driver Door, or Off.

Delayed Door Lock

When on, this feature will delay the locking of the doors. To override the delay, press the power door lock switch on the door.

Select to turn on or off.

Remote Lock/Unlock/Start

Select and the following may be displayed:

- Remote Lock Feedback
- Remote Door Unlock
- Remote Unlock Feedback

Remote Lock Feedback

This allows the selection of what type of feedback is given when locking the vehicle with the Remote Keyless Entry (RKE) transmitter.

Select Lights and Horn, Lights Only, Horn Only, or Off.

Remote Door Unlock

This allows the selection of which doors will unlock when pressing 🔓 on the RKE transmitter.

Select All Doors or Driver Door Only. When set to Driver Door Only, the driver door will unlock the first time 🔓 is pressed and all doors will unlock when 🔓 is pressed a second time. When set to All Doors, all of the doors will unlock with the first press of 🔓.

Remote Unlock Feedback

If equipped, this allows the selection of what type of feedback is given when unlocking the vehicle with the RKE transmitter.

Select On or Off.

Return to Factory Settings?

Select to return all vehicle personalization to the default settings.

Select Yes or No.

✍ NOTES

Lighting

Exterior Lighting
Exterior Lamp Controls 6-1
Headlamp High/Low-Beam Changer 6-1
Flash-to-Pass 6-1
Daytime Running Lamps (DRL) 6-2
Automatic Headlamp System 6-2
Hazard Warning Flashers 6-3
Turn and Lane-Change Signals 6-3

Interior Lighting
Instrument Panel Illumination Control 6-4
Dome Lamps 6-4

Lighting Features
Entry Lighting 6-5
Exit Lighting 6-5
Battery Power Protection 6-5

Exterior Lighting

Exterior Lamp Controls

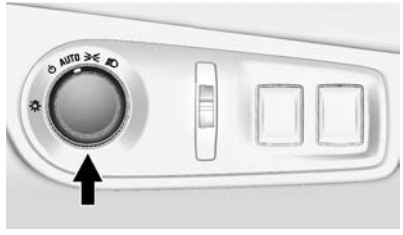

The exterior lamp control is on the instrument panel to the left of the steering wheel.

There are four positions:

(Off): Briefly turn to this position to turn the automatic light control off or on again.

AUTO (Automatic): Automatic operation of the headlamps at normal brightness and other exterior lamps.

(Parking Lamps): Turns on the parking lamps including all lamps, except the headlamps.

(Headlamps): Turns on the headlamps together with the parking lamps.

Headlamp High/ Low-Beam Changer

The headlamps must be on for this feature to work.

Push the turn signal lever away from you to turn the high beams on.

The indicator light turns on in the instrument cluster when the high-beam headlamps are on.

Push the lever away from you to return to low beams.

Flash-to-Pass

To flash the high beams, pull the lever toward you. The lamps remain on high beam as long as the lever is held.

Daytime Running Lamps (DRL)

DRL can make it easier for others to see the front of your vehicle during the day.

The DRL system makes the headlamps come on at a reduced brightness when the following conditions are met:

- The engine is running.
- The exterior lamp control is in AUTO.
- The shift lever is out of the (P) position.
- The light sensor determines it is daytime.

When the DRL are on, the taillamps, sidemarker lamps, instrument panel lights, and other lamps will not be on.

The headlamps automatically switch from DRL to the regular headlamps depending on the darkness of the surroundings. See “Automatic Headlamp System” following.

To turn off the DRL, turn the exterior lamp control to ⏻ and then release.

See *Delete Daytime Running Lamps and Auto Headlamps - SEO VVS on page 15-15* (If Equipped).

Automatic Headlamp System

When it is dark enough outside and the exterior lamp control is in the automatic position, the headlamps and parking lamps will turn on and off automatically. See *Exterior Lamp Controls on page 6-1*.

There is a light sensor on top of the instrument panel. Do not cover the sensor; otherwise the headlamps will come on when they are not needed.

The system may also turn on the headlamps when driving through a parking garage or tunnel.

When it is bright enough outside, the headlamps turn off.

The automatic headlamp system turns off when the exterior lamp control is turned to ⏻ or the ignition is off.

The automatic headlamp system defaults to on with each ignition cycle.

Hazard Warning Flashers

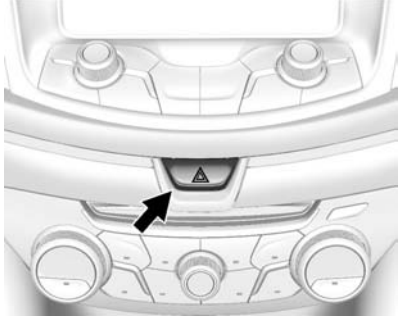

⚠ **(Hazard Warning Flasher):** Press this button on the center stack near the audio system, to make the front and rear turn signal lamps flash on and off. Press again to turn the flashers off.

Turn and Lane-Change Signals

Move the lever all the way up or down to signal a turn.

An arrow on the instrument cluster will flash in the direction of the turn or lane change.

Raise or lower the lever until the arrow starts to flash to signal a lane change. The turn signal flashes three times.

The lever returns to its starting position when it is released.

If after signaling a turn or lane change the arrow flashes rapidly or does not come on, a signal bulb may be burned out. Replace any burned out bulbs. If a bulb is not burned out, check the fuse. See *Fuses on page 10-32*.

Interior Lighting

Instrument Panel Illumination Control

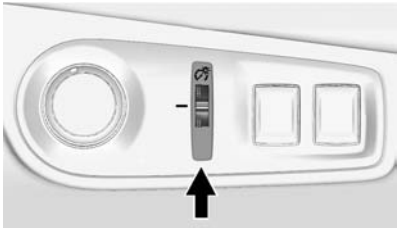

This feature controls the brightness of the instrument panel controls and infotainment display screen. The thumbwheel is to the left of the steering column on the instrument panel.

(Instrument Panel Brightness): Move the thumbwheel up or down to brighten or dim the instrument panel controls and infotainment display screen.

Surveillance Mode

The Police Package is equipped with a circuit that can be connected to a customer furnished switch to suppress automatic lighting and audible signals. The manual controls and vehicle messages are still functional. See *SEO Standard Options - Police Package and Special Service Package on page 15-1*.

Dome Lamps

The dome lamp controls are on the front overhead console.

(Off): Turns the lamps off.

(On): Turns the lamps on.

(Door): Automatically turns on the lamps when a door is opened, the vehicle is unlocked, or the ignition is turned off.

When the interior lamps are set to door activated, they operate automatically only when it is dark.

The lamps dim to off after all doors are closed. They turn off about 10 minutes after the key is turned to the lock position. They turn off immediately if the ignition is turned on and all doors are closed.

See *Auxiliary Dome Lamp - SEO 6C7 on page 15-8* (If Equipped).

Lighting Features

Entry Lighting

The headlamps, parking lamps, taillamps, back-up lamps, and most of the interior lamps turn on briefly when 🔓 is pressed on the Remote Keyless Entry (RKE) transmitter. After about 30 seconds the exterior lamps turn off, and then the dome and remaining interior lamps will dim to off.

This feature can be changed. See “Vehicle Locator Lights” under *Vehicle Personalization on page 5-26*.

Exit Lighting

The exterior lamps will illuminate an area with limited lighting for a set amount of time when the ignition is turned to LOCK/OFF.

This feature can be changed. See *Vehicle Personalization on page 5-26*.

Battery Power Protection

To prevent the battery from being drained, the glove box, trunk, and reading lamps automatically turn off 10 minutes after the ignition is turned off.

The lamps are reactivated if any of the following occur:

- The ignition is turned on.
- The vehicle is unlocked.
- The trunk is opened.

✍ NOTES

Infotainment System

Introduction
Introduction 7-1
Theft-Deterrent Feature 7-2
Overview 7-2
Using the System 7-4
Operation 7-8

Radio
AM-FM Radio 7-11
Radio Reception 7-13
Fixed Mast Antenna 7-13
Quick Info 7-13
Pandora Internet Radio 7-14
Stitcher Internet Radio 7-17

Audio Players
CD Player 7-20
MP3 7-22
Auxiliary Devices 7-24
Bluetooth Audio 7-24

Voice Recognition
Voice Recognition 7-25

Phone
Bluetooth 7-28
Hands-Free Phone 7-34

Trademarks and License Agreements
Trademarks and License Agreements 7-35

Introduction

General Information

Determine which radio the vehicle has and read the following pages to become familiar with its features.

⚠ Warning

Taking your eyes off the road for extended periods could cause a crash resulting in injury or death to you or others. Do not give extended attention to infotainment tasks while driving.

This system provides access to many audio and non-audio listings.

To minimize taking your eyes off the road while driving, do the following while the vehicle is parked:

- Become familiar with operation and controls of the audio system.

- Set up the tone, speaker adjustments and preset radio stations.

See *Defensive Driving on page 9-2*.

⚠ Caution

Contact your dealer before adding any equipment.

Adding audio or communication equipment could interfere with the operation of the engine, radio, or other systems and could damage them. Follow federal rules covering mobile radio and telephone equipment.

Customer Assistance

Assistance is available to help with the Bluetooth pairing, application downloading and installation, other mobile device interface and operation support of the infotainment system. Specialists are available at this Customer Assistance number:
U.S. (855) 4 SUPPORT (478-7767).

Theft-Deterrent Feature

The infotainment system includes an electronically coded security system.

This electronically links the infotainment system to the vehicle.

Overview

The infotainment system is controlled by using the buttons, touch screen, steering wheel controls and voice recognition.

See *Using the System on page 7-4*.

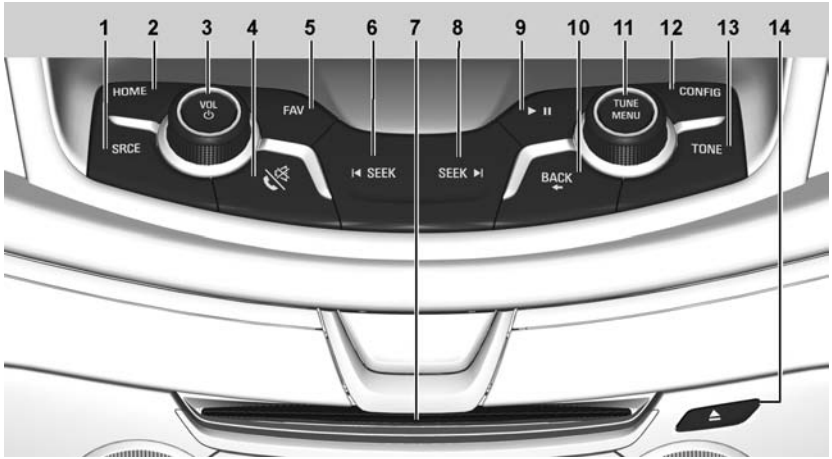

1. SRCE (Source)
2. HOME
3. VOL/⏻ (Volume/Power)
4. ✆/🔇 (Phone/Mute)
5. FAV (Favorites)
6. ⏮ SEEK
7. Disc slot (CD)
8. SEEK ⏭
9. ▷/II (Play/Pause)
10. BACK⇦
11. TUNE/MENU
12. CONFIG (Configuration)
13. TONE
14. ⏏ (Eject)

Infotainment Control Buttons

The buttons on the faceplate are used to start primary functions while using the infotainment system.

SRCE (Source): Press to change the audio source to AM, FM, CD, or Bluetooth Audio.

HOME: Press to go to the Home Page. See “Home Page” in this section.

⏮ **SEEK (Previous/Reverse):**

- CD or Bluetooth Audio: Press to seek to the beginning of the current or previous track.
- CD or Bluetooth Audio: Press and hold to quickly reverse through a track. Release the button to return to playing speed. See *CD Player on page 7-20* or *Bluetooth Audio on page 7-24*.
- AM or FM: Press to seek the previous strong station.

VOL/⏻ (Volume/Power):

- Press to turn the system on and off.
- Turn to adjust the volume.

⏭ SEEK (Next/Forward):

- CD or Bluetooth Audio: Press to seek the next track.
- CD or Bluetooth Audio: Press and hold to fast forward through a track. Release the button to return to playing speed. See *CD Player on page 7-20* or *Bluetooth Audio on page 7-24*.
- AM or FM: Press to seek the previous strong station.

▷/II (Play/Pause): Press to pause or resume playback. See *CD Player on page 7-20* or *Bluetooth Audio on page 7-24*.

TONE: Press to access the Tone Settings menu screen to adjust Bass, Mid (Midrange), Treble, EQ, Fade, and Balance. Tone settings are specific to each source. See *AM-FM Radio on page 7-11*.

FAV (Favorites): Press to display the current favorite page number above the preset buttons. Keep pressing to scroll through the favorites pages. The stored stations for each list display on the bottom of the screen. The number of preset Favorite Pages can be changed by pressing the Config button on the Home Page, then pressing Radio Settings, and then pressing Number of Favorite Pages.

✆/🔇 (Phone/Mute)

- Press to enter the phone main screen. See *Bluetooth on page 7-28* or *Hands-Free Phone on page 7-34*.
- Press and hold to mute or unmute the infotainment system.

BACK⇦ : Press to return to the previous screen in a menu.

TUNE/MENU:

1. Turn to change a radio station. See *AM-FM Radio on page 7-11*.
2. Turn to highlight a feature within a menu. Press the outer ring to activate the highlighted feature.

CONFIG (Configuration): Press to adjust features for Languages, Time and Date, Radio Settings, Phone Settings, Display Settings, and Vehicle Settings.

⏏ (Eject): Press to eject a disc from the infotainment system. See *CD Player on page 7-20*.

Touch Screen Buttons

Touch screen buttons are on the screen and highlighted when a feature is available. Some toggle screen buttons highlight when active and gray out when inactive.

Using the System

The infotainment system is controlled by pressing the screen buttons, using the switches, and pressing the buttons.

Voice recognition is activated through the steering wheel controls and can be used to control the infotainment features.

Press / on the steering wheel controls to begin voice recognition. See *Voice Recognition on page 7-25*.

Home Page

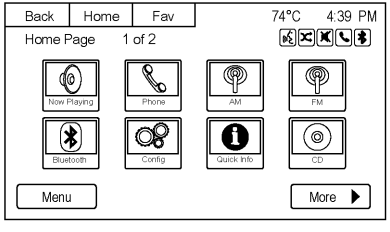

Screen Buttons

The Home Page allows access to many of the features.

Back: Press to return to the previous page.

Home: Press to go back to the Home Page.

Fav: Press to display a page of stored favorite AM or FM stations. Continue pressing Fav to scroll through the favorite pages.

More ▶ : Press to go to the next page.

Home Page Customization

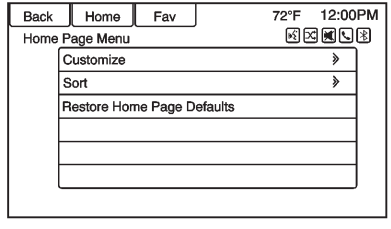

The first Home Page can be customized.

To add screen buttons:

1. Press Menu.
2. Select Customize.
3. Press a screen button to add or remove it from the first Home Page. A ◉ indicates it will be displayed. The maximum number of buttons on the first Home Page is eight.
4. Press Done.

To move screen buttons:

1. Select Sort.
2. Press to select an icon to move and swap with another icon on the first Home Page only.
3. Press Done.

To restore the first Home Page defaults:

1. Press Menu.
2. Select Restore Home Page Defaults.
3. Press Yes or Cancel.

Home Page Features

Screen buttons are highlighted when a feature is available.

Various functions are disabled when the vehicle is moving.

Press the Now Playing screen button to display the active source page. The sources available are AM, FM, Pandora (if equipped), Stitcher, and CD.

See *AM-FM Radio on page 7-11*, and *CD Player on page 7-20*.

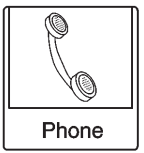

Press the Phone screen button to display the Phone main page. See *Bluetooth on page 7-28* and *Hands-Free Phone on page 7-34*.

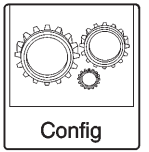

Press the Config screen button to display the Config main page. From this display, adjust features such as time and date, radio, phone, vehicle, and display.

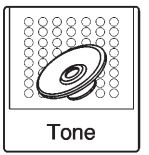

Press the Tone screen button to display the Tone main page. Adjust the tone and speakers by pressing the screen buttons to change the levels of sound for treble, midrange, bass, fade, and balance. See *AM-FM Radio on page 7-11*.

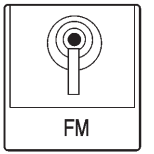

Press the FM screen button to display the FM main page and play the current or last tuned FM station. See *AM-FM Radio on page 7-11*.

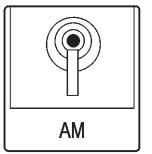

Press the AM screen button to display the AM main page and play the current or last tuned AM station. See *AM-FM Radio on page 7-11*.

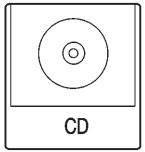

Press the CD screen button to display the CD main page and play the current or last CD track selected. See *CD Player on page 7-20*.

Press the Pandora screen button (if equipped) to display the Pandora home page and stream personalized radio stations based on artists, songs, genres, and comedians. See *Pandora Internet Radio on page 7-14*.

Press the Stitcher screen button (if equipped) to display the Stitcher home page and stream news, sports, and entertainment shows through the audio system. See *Stitcher Internet Radio on page 7-17*.

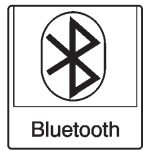

Press the ⓑ Bluetooth screen button to display the Bluetooth Audio main page to play music through a Bluetooth device. See *Bluetooth Audio on page 7-24*.

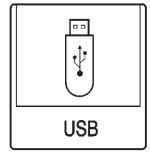

This feature is permanently disabled.

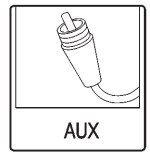

This feature is permanently disabled.

Touch the Quick Info screen button to access information on Audio playing. See *Radio Reception on page 7-13*.

Cleaning High Gloss Surfaces and Vehicle Information and Radio Displays

If equipped with high gloss surfaces or displays, use a microfiber cloth to wipe surfaces. Before wiping the surface with the microfiber cloth, use a soft bristle brush to remove dirt that could scratch the surface. Then use the microfiber cloth by gently rubbing to clean. Never use window cleaners or solvents. Periodically hand wash the microfiber cloth separately, using mild soap. Do not use bleach or fabric softener. Rinse thoroughly and air dry before next use.

⚠ Caution

Do not attach a device with a suction cup to the display. This may cause damage and may not be covered by the warranty.

Operation

Controls

The infotainment system is operated by using the buttons, knobs, menus shown on the display, and steering wheel controls.

Turning the System On or Off

VOL/⏻ Knob (Volume/Power): Press to turn the system on and off.

Automatic Switch-Off

If the infotainment system has been turned on after the ignition is turned off, the system will turn off automatically after 10 minutes.

Volume Control

VOL/⏻ Knob (Volume/Power): Turn to adjust the volume.

/ (Phone/Mute): Press and hold to mute the infotainment system. Press / again, or turn the VOL/⏻ knob to cancel mute.

Menu System

Controls

The TUNE/MENU knob and BACK button are used to navigate the menu system.

TUNE/MENU Knob:

Press to:

- Enter the menu system.
- Select or activate the highlighted menu option.
- Confirm a set value.
- Turn a system setting on or off.

Turn to:

- Highlight a menu option.
- Select a value.

BACK:

Press to:

- Exit a menu.
- Return from a submenu screen to the previous menu screen.

Selecting a Menu Option

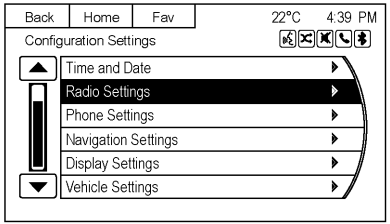

1. Turn the TUNE/MENU knob to move the highlighted bar.
2. Press the TUNE/MENU knob to select the highlighted option.

Submenus

An arrow on the right-hand edge of the menu indicates that it has a submenu with other options.

Activating a Setting

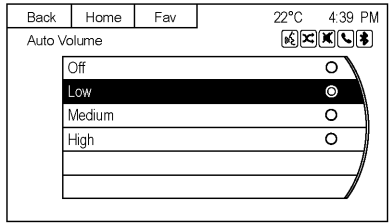

1. Turn the TUNE/MENU knob to highlight the setting.
2. Press the TUNE/MENU knob to activate the setting.

Setting a Value

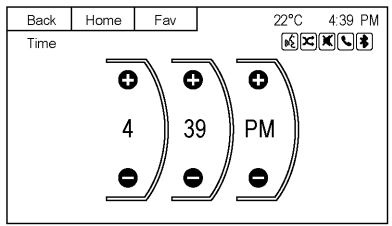

1. Turn the TUNE/MENU knob to change the current value of the setting.
2. Press the TUNE/MENU knob to confirm the setting.

Turning a Function On or Off

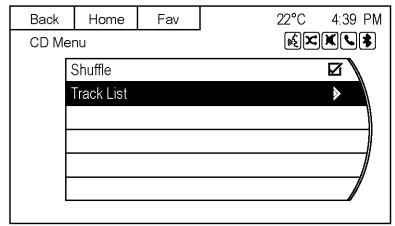

1. Turn the TUNE/MENU knob to highlight the function.
2. Press the TUNE/MENU knob to turn the function on or off.

Audio Settings

The audio settings can be set for each radio band and each audio player source.

Adjusting the Treble, Midrange, and Bass

1. Press the TONE button.
2. Select Bass, Mid, or Treble.
3. Select the value.

Press BACK⇦ to go back to the Tone Settings menu.

Adjusting the Fader and Balance

1. Press the TONE button.
2. Select Fade or Balance.
3. Select the value.

Press BACK⇦ to go back to the Tone Settings menu.

Adjusting the EQ (Equalizer)

For vehicles that have an equalizer:

1. Press the TONE button.
2. Select EQ presets.
3. Select the setting.

Press BACK⇦ to go back to the Tone Settings menu.

System Settings

Configuring the Number of Favorite Pages

To configure the number of available favorite pages:

1. Press the CONFIG button.
2. Select Radio Settings.
3. Select Number of Favorite Pages.
4. Select the number of available favorite pages.
5. Press BACK⇦ to go back to the Radio Settings menu.

Auto Volume

The auto volume feature automatically adjusts the radio volume to compensate for road and wind noise as the vehicle speeds up or slows down, so that the volume level is consistent.

The level of volume compensation can be selected, or the auto volume feature can be turned off.

1. Press the CONFIG button.
2. Select Radio Settings.
3. Select Auto Volume.
4. Select the setting.
5. Press BACK⇦ to go back to the Radio Settings menu.

Maximum Startup Volume

The maximum volume played when the radio is first turned on can be set.

1. Press the CONFIG button.
2. Select Radio Settings.
3. Select Startup Volume.
4. Select the setting.
5. Press BACK⇦ to go back to the Radio Settings menu.

Radio

AM-FM Radio

Playing the Radio

VOL/⏻ (Volume/Power):

- Press to turn the radio on or off.
- Turn to increase or decrease the volume of the active source.

The steering wheel controls can also be used to adjust the volume. See *Steering Wheel Controls on page 5-2*.

Radio Operation

The radio will work when the ignition is in the ON/RUN or Accessory mode.

When the ignition is turned off, the radio will continue to operate for 10 minutes or until the driver door is opened.

The radio can be turned on by pressing the power button on the radio and will stay on for 10 minutes. Opening the driver door will not turn the radio off when pressing the power button.

The radio can be turned off at any time by pressing VOL/⏻.

Audio Source

Press SRCE or SRC on the steering wheel controls to display and scroll through the available sources AM, FM, CD, and Bluetooth Audio.

Infotainment System Settings

Tone Settings

To access the tone settings, press TONE or touch the Tone Settings button on the Home Page. Tone settings are specific to each source.

To adjust the settings:

- Bass: Press + or − to change the level.
- Mid (Midrange): Press + or − to change the level.
- Treble: Press + or − to change the level.
- EQ: Press or turn the TUNE/MENU knob to cycle through the preset EQ options.
- Fade: Press the F or R screen button for more sound from the front or rear speakers. The middle position balances the sound between the front and rear speakers.
- Balance: Press the L or R screen button for more sound from the left or right speakers. The middle position balances the sound between the left and right speakers.

Finding a Station

Press SRCE or SRC on the steering wheel controls to select AM, FM, CD, and Bluetooth Audio.

Turn the TUNE/MENU knob to find a radio station. To select a preset station, press FAV to scroll through the favorite pages and then press a screen button.

Seeking a Station

Press ⏮ SEEK or SEEK ⏭ to search for a station.

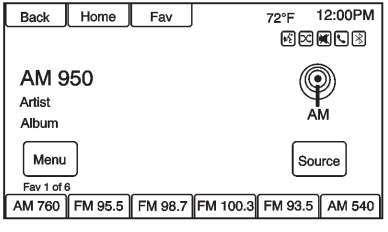

AM

1. Press the AM screen button on the Home Page or select AM by pressing SRCE or SRC on the steering wheel controls, or say “Tune AM” or “AM” through voice recognition.
2. Press the Menu screen button to display the AM stations or categories.
3. Press to select an option. To update the station list, press Refresh.

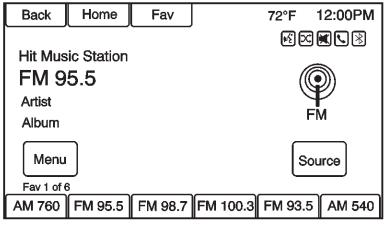

FM

1. Press the FM screen button on the Home Page or select FM by pressing SRCE or SRC on the steering wheel controls, or say “Tune FM” or “FM” through voice recognition.
2. Press the Menu screen button to display the FM stations or categories.
3. Press to select an option. To update the station list, press Refresh.

Storing Radio Station Presets

Up to 36 preset stations can be stored. AM and FM can be mixed.

1. From the AM or FM main page, press and hold any of the preset screen buttons at the bottom of the screen. After a few seconds, a beep is heard and the new preset information displays on that screen button.
2. Repeat for each preset.

Mixed-Band Presets

Each favorite page can store six preset stations. The presets within a page can be different radio bands.

To scroll through the pages, press FAV or press the Fav screen button. The current page number displays

above the preset buttons. The stored stations for each favorite page display on the preset buttons.

To change the number of favorite pages displayed:

1. Press Config on the Home Page.
2. Press Radio Settings.
3. Press Number of Favorite Pages.

Recalling a Preset Station

To recall a preset station from a favorites page, do one of the following:

- Press the Fav screen button at the top bar to display the preset pop-up. Press one of the preset screen buttons to go to the selected preset station.
- From the AM or FM main page, press one of the preset screen buttons to go to the selected preset station.

Radio Reception

Frequency interference and static can occur during normal radio reception if items such as mobile phone chargers, vehicle convenience accessories, and external electronic devices are plugged into the accessory power outlet. If there is interference or static, unplug the item from the accessory power outlet.

FM

FM signals only reach about 16 to 65 km (10 to 40 mi). Although the radio has a built-in electronic circuit that automatically works to reduce interference, some static can occur, especially around tall buildings or hills, causing the sound to fade in and out.

AM

The range for most AM stations is greater than for FM, especially at night. The longer range can cause station frequencies to interfere with each other. Static can occur when things like storms and power lines interfere with radio reception. When this happens, try reducing the treble on the radio.

Mobile Phone Usage

Mobile phone usage can cause interference with the vehicle's radio.

Fixed Mast Antenna

The AM-FM antenna is located on the roof of the vehicle.

Driving through an automatic car wash without removing the antenna could damage it.

To remove the antenna, turn it counterclockwise. To replace the antenna, turn it clockwise until hand tightened.

Quick Info

Quick Info gives access to quick information on Audio playing.

To access, press Quick Info on the Home Page or the INFO button on the faceplate. Depending on the

system and if the options are available for that region, some options may be grayed out.

Audio Info: Displays information on the current item playing.

Pandora Internet Radio

Pandora® (if equipped) is a free Internet radio service that streams personalized radio stations based on artists, songs, genres, and comedians. Create stations using the Pandora website or smartphone application, then use (thumbs up) or (thumbs down) to personalize stations. To set up an account, or for more information, go to www.pandora.com. Pandora may not be available in Canada or Mexico.

A phone or tablet with Internet connection and the Pandora application installed is required. Personal cell phone data plans are used. Make sure the latest version is installed on the device and the volume is turned up.

To install Pandora:

- On an Android™ phone or Android Tablet, go to the Android Market, and search for Pandora. Install to the phone, not to the SD card.
- On a BlackBerry® phone, go to the BlackBerry App World™ and search for Pandora.

Launching Pandora

Connect the Android or BlackBerry through Bluetooth. See *Bluetooth on page 7-28*. For first time use, set up stations before connecting to the vehicle. The Pandora icon will be available on the Home Page and the source pop-up displays if the latest application is installed on the device.

Using an Android Phone

1. Pair the phone using Bluetooth.
2. Use one of the following to launch:
   - Launch the application on the device.
   - Press Pandora on the Home Page.
   - Press / and say “Pandora” or “Tune Pandora.”

After Pandora has been launched, press SOURCE or SRCE, or SRC on the steering wheel controls to access Pandora features.

If nothing happens when the available Pandora screen button is pressed, download the latest Pandora application and retry.

If the “Please See Device” message is shown, the login screen may display on the device.

Using a BlackBerry Phone

The phone must be unlocked. To launch Pandora service:

1. Pair the BlackBerry phone using Bluetooth.
2. Use one of the following to launch:
   - Launch the application on the device.
   - Press Pandora on the Home Page.
   - Press / and say "Pandora" or "Tune Pandora."

After Pandora has been launched, press SOURCE or SRCE, or SRC on the steering wheel controls to access Pandora features.

If nothing happens when the available Pandora screen button is pressed, download the latest Pandora application and retry.

If the "Please See Device" message is shown, the login screen may display on the device.

Pandora Menus

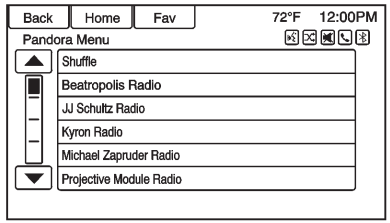

Press Menu on the Pandora main page.

Pandora has a menu system with the following:

Quickmix: Press to play the stations in random order.

User-Created Stations: Press to play a user-created station.

Pandora Features

Pandora has features to rate tracks, skip tracks, or change stations.

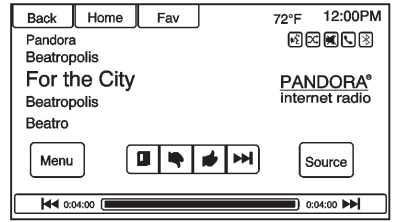

(Bookmarks): Press while playing a track to bookmark either the track or the artist. Bookmarks are viewable on www.pandora.com.

(Thumbs Down): When pressed, Pandora stores the information, changes to the next track, and does not play the track on this station again. This helps Pandora choose which tracks should not play on this station. This feature is only available on user created stations.

(Thumbs Up): When pressed, Pandora stores this information and is highlighted for the remainder of the track. This helps Pandora choose which tracks should play on this station.

(Next Track): When pressed, Pandora changes to the next track.

/ (Play/Pause): Press on the radio to pause playback. Press again to resume.

Pandora Skip Limit

Pandora limits the number of skips allowed on their service. When the skip limit is reached, will not skip the currently playing track, but feedback will be recorded.

Pandora Advertisement

Pandora may display advertisements. Artist name and track title will not be displayed and the skip track button is not available.

Pandora Troubleshooting

Unable to Connect Device to Vehicle

If the device is unable to connect:

1. Turn the vehicle off.
2. Remove the key from the ignition.
3. Open and close the driver door, wait about 30 seconds, and try to connect the device again.

Unable to Start Pandora

If the device is unable to launch Pandora:

- Check that the latest version of Pandora is installed.
- Check that there is an active account logged into Pandora.
- Have at least one station created.
- Check that the device is paired with the vehicle, and the Bluetooth icon on the display is highlighted.
- Close Pandora on the device and launch again. Devices that allow multitasking may require an extra step to quit the Pandora application. See the cell phone manufacturer's user guide.

Thumbs Up or Thumbs Down Error

If there is an error trying to rate a track with the or buttons, the message “Thumbs Down Error” or “Thumbs Up Error” will display. Press OK to retry.

Loss of Audio

Loss of Pandora audio can happen in different ways:

- Weak or lost data connection.
- Device needs to be charged.
- Application needs to be relaunched.
- Connection between phone and radio lost.
- The volume is too low. Turn up the volume on the device.

If the connection is lost between the application and device, a message “Please unlock your phone or restart the phone app and try again” will display. Press OK to retry.

Common Pandora Messages

Please See Device: When the user is not logged in or when authentication failed, see device. Press OK to continue.

Paused or Audio Paused: Playback is paused on radio or device. Press ▶/II or play on the device.

No Stations Found: Logged in but no stations created. Press OK to continue.

Please Unlock Your Phone or Restart Phone App and Try Again: Communication failure between the radio and the phone application or device is locked.

See www.pandora.com/help for more information. If the service will not work, see your dealer for assistance.

Stitcher Internet Radio

Stitcher SmartRadio™ (if equipped) is an Internet radio service that streams news, sports, and entertainment shows through the audio system. Create personalized, on-demand stations or discover new shows through Stitcher's preset stations. To set up an account, download the application from the Android Market or iTunes Store, or go to www.stitcher.com.

A phone or tablet with Internet connection is required for this application. Personal cell phone data plans are used. Make sure the latest version is installed on the device and the volume on the device is turned up.

BlackBerry phones are not supported for this application.

To install Stitcher:

- On an Android phone or Tablet with Internet connection, go to the Android Market, search for Stitcher, and install to the phone, not to the SD card.

Launching Stitcher

Connect the Android through Bluetooth. See *Bluetooth on page 7-28*. For first time use, set up the stations before connecting to the vehicle. The Stitcher icon will be available on the Home Page and source pop-up displays if the latest application is installed on the device.

Using an Android Phone

1. Pair the phone using Bluetooth.
2. Use one of the following to launch:
   - Press the application on the device.
   - Press Stitcher on the Home Page.

- Press ✆ / 🎤 and say "Stitcher" or "Tune Stitcher."

3. If Stitcher does not begin playing, select a category and then a station.

After Stitcher has been launched, press SOURCE or SRCE, or SRC on the steering wheel controls to access Stitcher features.

If nothing happens when the available Stitcher screen button is pressed, download the latest Stitcher application and retry.

If the "Please See Device" message is shown, the login screen may display on the device.

Stitcher Menus

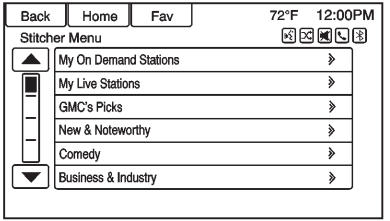

Press Menu on the Stitcher main page.

Stitcher has a menu system with the following:

My Favorites: Displays a list of favorite stations and shows.

Select and store programs as favorites on the device and then access them through My Favorites.

Stitcher Station Categories: Displays categories by topic.

When a category then sub-category is selected, the radio will start playing the first program in that sub-category.

Turn the Multifunction or MENU knob to bring up the first 24 stations of that sub-category.

Current Station Playlist: While listening to a show, turn the Multifunction or MENU knob to display the menu list of shows available for the current station.

Stitcher Features

Stitcher service has features to rate or skip shows, or change stations.

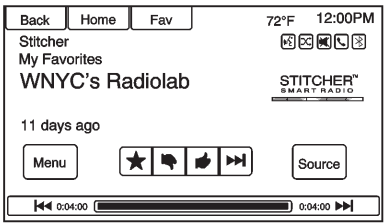

★ **(Favorites):** When pressed, the current show is added to the favorites station.

(Thumbs Down): When pressed, Stitcher changes to the next show. This helps Stitcher provide a personalized listening experience.

(Thumbs Up): When pressed, Stitcher stores this information and is highlighted for the remainder of the show. This helps Stitcher provide a personalized listening experience.

(Next Show): When pressed, Stitcher changes to the next show.

/ (Play/Pause): Press on the radio to pause playback. Press again to resume.

Stitcher Advertisement

Stitcher may display advertisements. Artist name and title may not be displayed and the skip track button is not available.

Stitcher Troubleshooting

Unable to Connect Device to Vehicle

If the device is unable to connect:

1. Turn the vehicle off.
2. Remove the key from the ignition.
3. Open and close the driver door, wait about 30 seconds, and try to connect the device again.

Unable to Start Stitcher

If the device is unable to launch Stitcher:

- Check that the latest version of Stitcher is installed.
- Check that there is an active account logged into Stitcher.
- Have at least one station created.
- Check that the device is paired with the vehicle, and the Bluetooth icon on the display is highlighted.
- Close Stitcher on the device and launch again. Devices that allow multitasking may require an extra step to quit the Stitcher application. See the cell phone manufacturer's user guide.

Loss of Audio

Loss of Stitcher audio can happen due to:

- Weak or lost data connection.
- Device needs to be charged.
- Application needs to be relaunched.
- Connection between phone and radio is lost.
- The volume is too low. Turn up the volume on the device.

If the connection is lost between the application and device, a message “Please unlock your phone or restart the phone app and try again” will display. Press OK to retry.

Common Stitcher Messages

Please Try Again Later: A general error has occurred. A data connection may be unavailable due to a weak or lost signal or the Stitcher service being temporarily down. Press OK to continue.

Paused or Audio Paused: Playback is paused on radio or device. Press ▶/II or play on the device.

Please See Device: When the user is not logged in or when authentication failed, see device. Press OK to continue. Disconnect the phone from the radio and follow the Stitcher account login process on the phone.

No Stations Found: Logged in but no stations created. Press OK to continue.

Please Choose a New Station: The end of the station has been reached and there is no more content to play. Select a new station through the Stitcher menu.

Please Unlock Your Phone or Restart Phone App and Try Again: Communication failure between the radio and the phone application or device is locked.

See www.stitcher.com/help for more information. If the service will not work, send an e-mail to feedback@stitcher.com or see your dealer for assistance.

Audio Players

CD Player

The CD player is capable of playing:

- Most audio CDs
- CD-R
- CD-RW
- MP3, unprotected WMA, and AAC formats

When playing any compatible recordable disc, the sound quality may be reduced due to the disc, the method of recording, the quality of the music recorded, or how the disc has been handled.

There may be increased skipping, difficulty reading recorded tracks, finding tracks, and/or loading and ejecting. If these problems occur, check the disc for damage or try a known good disc.

To avoid damage to the CD player:

- Do not use scratched or damaged discs.

- Do not apply labels to discs. The labels could get caught in the player.
- Insert only one disc at a time.
- Keep the loading slot free of foreign materials, liquids, and debris.
- Use a marking pen to label the top of the disc.

Loading and Ejecting Discs

To load a disc:

1. Turn the infotainment system on.
2. Insert a disc into the slot, right side up. The player pulls it in the rest of the way. If the disc is damaged or improperly loaded, there is an error and the disc ejects.

The disc automatically plays once loaded.

Press ⏏ to eject a disc from the CD player. If the disc is not removed within a short period of time, it is automatically pulled back into the player.

Playing an Audio CD

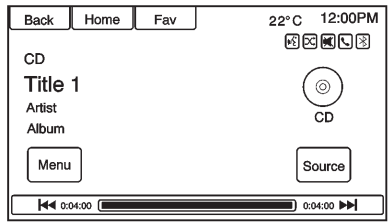

1. Press the CD screen button on the Home Page or select CD from the source pop-up to display the CD main page.
2. Press the Menu screen button to display the menu options.
3. Press to select the option.

On the CD main page, the track number displays and the Song, Artist, and Album information displays when available.

Use the following radio controls to play the disc:

▷/II **(Play/Pause):** Use to pause or resume play.

⏮ **SEEK:**

- Press to seek to the beginning of the current or previous track. If the track has been playing for fewer than five seconds, it seeks to the previous track. If longer than five seconds, the current track starts from the beginning.
- Press and hold to fast reverse through a track. Release the button to return to playing speed. Elapsed time displays.

⏭ **SEEK:**

- Press to seek to the next track.

- Press and hold to fast forward through a track. Release the button to return to playing speed. Elapsed time displays.

TUNE/MENU Knob: Turn to the right or left to select the next or previous track. Press the knob to select from the list. If a track is selected from the menu, the system plays the track and returns to the CD screen.

Error Messages

If Disc Error displays and/or the disc comes out, it could be due to:

- The disc has an invalid or unknown format.
- The disc is very hot. Try the disc again when the temperature returns to normal.
- The road is very rough. Try the disc again when the road is smoother.
- The disc is dirty, scratched, wet, or upside down.
- The air is very humid. Try the disc again later.
- There was a problem while burning the disc.
- The label is caught in the CD player.

If the CD is not playing correctly, try a known good CD.

If any error continues, contact your dealer.

MP3

Playing an MP3 CD

To play an MP3 CD, follow the same instructions as “Playing a CD or MP3 CD.”

The following guidelines must be met when creating an MP3 disc, otherwise the CD might not play:

- Sampling rate: 16 kHz, 22.05 kHz, 24 kHz, 32 kHz, 44.1 kHz, and 48 kHz.
- Bit rates supported: 8, 16, 24, 32, 40, 48, 56, 64, 80, 96, 112, 128, 144, 160, 192, 224, 256, and 320 kbps.
- Maximum number of folders: eight folders with 255 files per folder.
- Maximum of 1,000 files on a disc.
- Recorded on a CD-R or CD-RW.
- The Artist/Album/Song Titles/ Genre information requires a CD to be fully scanned before the music navigator works with these menus.

MP3 Music Menu

Press the Menu screen button while that source is active to access the menu.

Press any of the following buttons on the MP3 Menu:

Shuffle: Press to play the tracks randomly. Press again to stop shuffle.

Playlists: Press to view the playlists stored on the disc. Select a playlist to view the list of all songs in that playlist. There might be a delay before the list displays. Select a song from the list to begin playback.

Folders: Press to open a folder list to access the files within the folder structure.

Track List: Press to list all the tracks on the disc.

Artists: Press to view the list of artists stored on the disc. Select an artist name to view a list of all songs by the artist. There might be a delay before the list displays. Select a song from the list to begin playback.

Albums: Press to view the albums on the disc. Select the album to view a list of all songs on the album. There might be a delay before the list displays. Select a song from the list to begin playback.

Song Titles: Press to display a list of all songs on the disc. Songs are displayed as stored on the disc. There might be a delay before the list displays. To begin playback, select a song from the list.

Genres: Press to view the genres. Select a genre to view a list of all songs of that genre. Select a song from the list to begin playback.

Root Directory

The root directory is treated as a folder. All files contained directly under the root directory are accessed prior to any root directory folders.

Empty Folders

If a root directory or folder is empty or contains only folders, the player advances to the next folder in the file structure that contains a compressed audio file. The empty folder(s) are not displayed or numbered.

No Folder

When the CD only contains compressed audio files without any folders or playlists, all files are under the root folder.

File System and Naming

The song titles, artists, albums, and genres are taken from the file's ID3 tag and are only displayed if present in the tag. If a song title is not present in the ID3 tag, the radio displays the file name as the track name.

Preprogrammed Playlists

The radio recognizes preprogrammed playlists; however, there is no editing capability. These playlists are treated as special folders containing compressed audio song files.

Auxiliary Devices

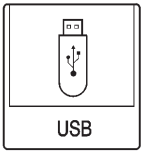

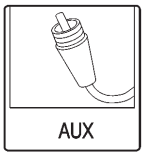

The USB and AUX features are permanently disabled.

Bluetooth Audio

If equipped, music may be played from a paired Bluetooth® device. See “Pairing a Phone/Device” under *Bluetooth on page 7-28*.

To play music through a Bluetooth device:

1. Power on the device, pair, and connect the device.
2. Music can be launched by doing one of the following:
   - Press the Bluetooth Audio screen button on the Home Page.
   - Press SRCE until Bluetooth Audio is selected.
   - Press the SRC button on the steering wheel controls until Bluetooth Audio is selected. See *Steering Wheel Controls on page 5-2*.
   - Use voice recognition. See *Voice Recognition on page 7-25*.

The music can be controlled by either the infotainment controls or the controls on the device.

When a phone is connected to the system through Bluetooth Audio the phone notifications and sounds may not be heard on the phone until Bluetooth is disconnected. Notification features may vary based on the phone. Check the phone manufacturer’s information for notification support.

Bluetooth Audio Menu

Touch the Menu screen button and the following may display:

Shuffle: Press the outer ring of the TUNE/MENU knob to turn shuffle on or off. Not all devices support the shuffle feature.

When selecting Bluetooth audio, the Bluetooth device internal music player may not open depending on the status of the device. All devices launch and play back audio differently. Make sure the correct audio source is playing on the device for Bluetooth audio playback on the infotainment system. When the vehicle is not moving, use the device to begin playback.

When selecting Bluetooth audio as a source, the infotainment system may display the Bluetooth Audio Paused screen with no audio playing. Press play on the device or

push ▷/II to begin playback. This may happen depending on how the device communicates over Bluetooth.

Some phones support sending Bluetooth music information to display on the infotainment system. When the infotainment system receives this information, it will check to see if any album art is available and display it.

When playing music on the infotainment system from a Bluetooth device, make sure the Bluetooth device is unlocked and the intended music application is showing on the home screen.

Voice Recognition

Voice recognition allows for hands-free operation of the infotainment system features.

Voice recognition can be used when the infotainment system is on. The system maintains a minimum volume level.

Using Voice Recognition

1. Press / on the steering wheel. The audio system mutes. A voice prompt states, “Please say a command.” Wait until the tone is heard before speaking.

   If there is no tone, make sure that the volume is turned up.

   While voice recognition is active, the system displays a symbol in the top right of the screen.
2. Clearly speak one of the commands listed later in this section.

Press / twice on the steering wheel to skip the voice prompt messages.

Cancelling Voice Recognition

1. Press and release / on the steering wheel control to cancel a command, if the system response does not match the voice command, or say “Goodbye” or “Cancel.”
2. The system replies, “Goodbye.”

Helpful Hints for Speaking Commands

- When multiple commands are available, choose the command that works best for you.
- Words in parentheses are optional. For example, for the command “Tune FM (frequency),” saying “Tune FM 87.7” or “Tune FM” are both valid commands.

- When the command is recognized, the system will either perform the function or ask to confirm the choice.
- When the system does not recognize the command, the system says “pardon.”
- If experiencing difficulty with the system recognizing a command, confirm that the command is correct. Try saying the command clearly or wait for a brief moment after the tone.
- Background noise such as a climate control fan positioned on high, open windows, and very loud outside noises, even if the windows are closed, can cause voice commands to be misunderstood.
- To increase or decrease the voice volume during a voice recognition session, turn the volume switch of the radio, or press the volume steering wheel control. If the volume is adjusted during a voice recognition session, a Volume bar appears on the screen showing the voice volume level as it is being adjusted. This also changes the volume of the guidance prompts.

Voice Recognition Help

To enter the help playback session, clearly speak one of the help commands.

Help: The system plays back more specific help commands such as Radio Settings for the user to choose from.

Radio: Use this command to learn about how to select a band (AM or FM), and how to change radio stations by speaking frequency numbers.

Phone: Use this command to learn about how to dial, pair a device, or delete a device.

My Media: Use this command to learn how to play specific tracks, artists, albums, or to change sources.

Settings: Use this command to learn about how to turn Verbose on or off, or set the language.

Voice Recognition Commands

The following list shows the voice commands available for the infotainment system with a brief description of each. The commands are listed with the optional words in parentheses. To use the voice commands, see the previous instructions.

Radio Commands

Tune AM or Tune FM: Instructs the system to go to the specific band and the last station.

Tune AM (frequency) or Tune FM (frequency): Instructs the system to go to the specific station.

Thumbs Up: Instructs the system to give the current song or station a thumbs up in Pandora or Stitcher.

Thumbs Down: Instructs the system to give the current song or station a thumbs down in Pandora or Stitcher.

Phone Commands

Dial or Call (phone number or contact): Instructs the system to start a phone call. For example, say “Dial 1234 5678.” To call a phone book contact, say “Dial” or “Call,” say the name and location, and then say “Dial.” For example, say “Call John at Home” or “Call John at Work.” If a number is not recognized, the first number in the list will be called.

Pair or Connect: Instructs the system to begin pairing a device.

Digit Dial: Instructs the system to dial a phone number one digit at a time. After saying the digits, say “Dial.”

Redial or Redial Last Number: Instructs the system to dial the last phone number called.

Select Device or Change Phone: Instructs the system to switch to a different paired device. The device must be selected from the screen or using the TUNE/MENU knob.

Delete Device: Instructs the system to delete a paired device.

My Media Commands

CD or Bluetooth Audio: Instructs the system to change the source.

Play CD: Instructs the system to play a CD. For example, say “Play CD.”

Settings Commands

Verbose (set) on (mode), Verbose (set) off (mode): Instructs the system to turn voice prompts on or off. When off, this feature turns off voice prompts.

List Devices: Instructs the system to give a list of devices to use.

Other Commands

Goodbye: Instructs the system to end a phone call or voice recognition.

Cancel: Instructs the system to cancel an action.

Go Back, Back, Previous: Instructs the system to go back to a prior menu.

Main Menu: Instructs the system to go to the main menu.

Yes, Yep, Yup, Ya, Sure, Right, Correct, OK, Positive, You Got it, Probably, You Bet: These can be used to say “Yes.”

No, Nope, Na, No way, Wrong, Incorrect, Negative, Not really, No I said, No I Did Not, No I Do Not: These can be used to say “No.”

Next Page, Page Down: Instructs the system to scroll forward one page in a list.

Previous Page, Page Up: Instructs the system to scroll back one page in a list.

Phone

Bluetooth

Overview

If equipped with Bluetooth capability, the system can interact with many mobile phones and devices, allowing:

- Placing and receiving hands-free calls.
- Sharing of the mobile phone's address book or contact list with the vehicle. The phone book will only display when that phone is connected.
- Placing outgoing calls by voice recognition.

The system can be used while the infotainment system is on. The range of the Bluetooth system can be up to 9.1 m (30 ft). The radio can connect to most Bluetooth-enabled phones. Available features and functions may be dependent on the device.

Bluetooth Controls

Use the buttons on the infotainment system and the steering wheel to operate the Bluetooth system.

Steering Wheel Controls

/ (Push to Talk): Press to answer incoming calls and start voice recognition.

/ (Mute/End Call): Press to end a call, decline an incoming call, or cancel voice recognition.

+ − (Volume): Press + or − to increase or decrease the volume.

Infotainment System Controls

For information about how to navigate the menu system using the infotainment controls, see *Overview on page 7-2*.

/ (Phone/Mute): Press to enter the Phone main menu. Press and hold to mute or unmute.

Voice Recognition

The voice recognition system uses commands to control the system and dial phone numbers.

When using voice recognition:

- The system may not recognize voice commands if there is too much background noise.
- A tone sounds to indicate that the system is ready for a voice command. Wait for the tone and then speak.
- Speak clearly in a calm and natural voice.

See *Voice Recognition on page 7-25*.

Audio System

Sound comes through the vehicle's front audio system speakers and overrides the audio system. Use the VOL/ knob during a call to change the volume level. The adjusted volume level remains in memory for later calls. The system maintains a minimum volume level.

See *Voice Recognition on page 7-25*.

Bluetooth Audio

See *Bluetooth Audio on page 7-24*.

Pairing with Infotainment Controls

A Bluetooth-enabled mobile phone must be paired and then connected to the vehicle before it can be used. See your mobile phone manufacturer's user guide for Bluetooth functions before pairing the mobile phone.

Pairing Information

- A Bluetooth-enabled phone and an audio playback device can be paired to the system at the same time.
- Up to five devices can be paired to the Bluetooth system.
- The pairing process is disabled when the vehicle is moving.
- Pairing only needs to be completed once, unless the pairing information on the mobile phone changes or the mobile phone is deleted from the system.
- Only one paired mobile phone can be connected to the Bluetooth system at a time.
- If multiple paired mobile phones are within range of the system, the radio will connect to the first phone in the list or to the phone that was previously connected.

Pairing a Phone/Device

1. Press CONFIG or Press Config on the Home Page or press ✆/⊠.
2. Select Phone Settings.
3. Select Bluetooth.
4. Select Pair Device. The infotainment system displays “Pairing Code: XXXX”. Confirm or enter number:” If the device supports a four-digit Personal Identification Number (PIN), it will display. The PIN is used in Step 6.
5. Start the pairing process on the mobile phone to be paired to the vehicle. See the mobile phone manufacturer's user guide.
6. Locate and select the device named Mylink in the list on the mobile phone. Follow the instructions on the mobile phone to enter the PIN provided in Step 4, or to confirm the six-digit code matches. The system recognizes the new connected phone after the pairing process is complete.
7. If the phone prompts to accept connection or allow phone book download, select always accept and allow. The phone book may not be available if not accepted. Some phones will put connection request or phonebook request in a pull down task bar at the top of the

screen. Drag down the task bar and look for connection/ phonebook request and accept.

8. Repeat to pair additional phones.

Listing All Paired and Connected Phones/Devices

1. Press CONFIG, Press Config on the Home Page and select Phone, or press /.
2. Select Phone Settings.
3. Select Bluetooth.
4. Select Device List.

Deleting a Paired Phone/Device

1. Press CONFIG, Press Config on the Home Page and select Phone, or press /.
2. Select Phone Settings.
3. Select Bluetooth.
4. Select Device List.
5. Select the phone to delete, select Delete and follow the screen prompts.

Connecting to a Different Phone

To connect to a different phone, the new phone must be in the vehicle and available to be connected to the Bluetooth system before the process is started.

1. Press CONFIG, Press Config on the Home Page and select Phone, or press /.
2. Select Phone Settings.
3. Select Bluetooth.
4. Select Device List.
5. Select the new phone to connect to and follow the screen prompts.

Pairing with Voice Recognition

A Bluetooth-enabled mobile phone must be paired and then connected to the vehicle before it can be used. See the mobile phone manufacturer's user guide for Bluetooth functions before pairing the mobile phone.

Pairing a Phone

1. Press / . The system responds “Please Say a Command,” followed by a tone.
2. Say “Pair.” The system responds with “Please search for Bluetooth devices on your phone, select your vehicle, confirm or enter the PIN number provided on the screen.”
3. Start the search for Bluetooth devices on the phone. Then select the device and follow the instructions on the phone by either entering the four-digit PIN or confirming the six-digit passcode. The PIN is used in Step 4.
4. Locate and select the device named after the vehicle make and model in the list on the cell phone. Follow the instructions on the mobile phone to enter the PIN provided in Step 3 or to confirm the six-digit code matches. The system responds “successfully paired.”

5. Repeat Steps 1–4 to pair additional phones.

Listing All Paired and Connected Phones

The system can list all mobile phones paired to it. If a paired mobile phone is also connected to the vehicle, the system responds with “is connected” after that phone name.

1. Press / . The system responds “Please Say a Command,” followed by a tone.
2. Say “List Device.”

Deleting a Paired Phone

If the phone name to delete is unknown, see “Listing All Paired and Connected Phones.”

1. Press / . The system responds “Please Say a Command,” followed by a tone.
2. Say “Delete Device.”
3. The system responds with: “To delete a device, please select its name from the list.” Select the device to delete on the display and it will be removed.

To cancel this command, press / on the steering wheel control or press the BACK button.

Connecting to a Different Phone or Device

To connect to a different mobile phone, the system looks for the next available mobile phone. Depending on the mobile phone to be connected, this command may need to be repeated.

1. Press / . The system responds “Please Say a Command,” followed by a tone.
2. Say “Change Phone.”
   - To select a device, press the name on the display.
   - If another mobile phone is not found, the original phone remains connected.

Making a Call Using Phone Book and Infotainment Controls

For mobile phones that support the phone book feature, the Bluetooth system can use the contacts stored on the mobile phone to make calls. See the mobile phone manufacturer‘s user guide or contact the wireless provider to find out if this feature is supported.

When a mobile phone supports the phone book feature, the Phone Book and Call Lists menus are automatically available.

The Phone Book menu allows access to the phone book stored in the mobile phone to make a call.

The Call Lists menu allows access to the phone numbers from the Incoming Calls, Outgoing Calls, and Missed Calls menus on the mobile phone to make a call.

The radio will display the first 1,000 contacts and the phone numbers for each contact including Home, Work, Mobile, and Other.

To make a call using the Phone Book menu:

1. Press /⊠ or touch the Phone screen button.
2. Select Phone Book.
3. Select the letter group of the phone book entry to scroll through the list of names/ numbers.
4. Select the name.
5. Select the number to call.

To make a call using the Call Lists menu:

1. Press /⊠ or touch the Phone screen button.
2. Select Call Lists.
3. Select the Incoming Calls, Outgoing Calls, or Missed Calls list.
4. Select the name or number to call.
5. Select Call.

Making a Call Using the Infotainment Controls

To make a call:

1. Press /⊠ or touch the Phone screen button.
2. Touch Enter number.
3. Enter the phone number.
4. Select OK to start dialling the number.

To make a call using voice recognition, see “Making a Call” under *Hands-Free Phone on page 7-34*.

Accepting or Declining a Call

When an incoming call is received, the infotainment system mutes and a ring tone is heard in the vehicle.

Using the Infotainment Controls

Turn the TUNE/MENU knob to “Answer” or “Decline” and press the TUNE/MENU knob or touch Accept or Decline on the screen.

Using Steering Wheel Controls

Press / to answer or / to decline the call.

Call Waiting Using the Infotainment Controls

Call waiting must be supported on the Bluetooth phone and enabled by the wireless service carrier to work.

Switching Between Calls (Call Waiting Calls Only)

To switch between calls turn and press the TUNE/MENU knob and select Switch Call or touch Switch Call on the screen.

Call Waiting Using Steering Wheel Controls

Call waiting must be supported on the mobile phone and enabled by the wireless service carrier.

- Press / to answer an incoming call when another call is active. The original call is placed on hold.
- Press / again to return to the original call.
- To decline answering the incoming call, touch Decline on the screen or take no action.
- Press / to disconnect the current call and switch to the call on hold.

Conference Calling Using the Infotainment Controls

Conference calling and three-way calling must be supported on the Bluetooth phone and enabled by the wireless service carrier to work. This feature is only supported when the vehicle is not moving.

To start a conference while in a current call:

1. Select Enter Number.
2. Enter the phone number and select OK.
3. After the call has been placed, turn the TUNE/MENU knob and choose Merge Calls.
4. To add more callers to the conference call, repeat Steps 1 −3. The number of callers that can be added is limited by your wireless service carrier.

Ending a Call

Using the Infotainment Controls

Turn and press the TUNE/MENU knob to select Hang Up, or press Hang Up on the screen.

Using Steering Wheel Controls

Press / .

Muting a Call

During a call, all sounds from inside the vehicle can be muted so that the person on the other end of the call cannot hear them.

Using the Infotainment Controls

Turn and press the TUNE/MENU knob to select Mute Call. Select again to cancel mute.

Transferring a Call

Audio can be transferred between the Bluetooth system and the mobile phone.

The mobile phone must be paired and connected with the Bluetooth system before a call can be transferred.

To Transfer Audio from the Bluetooth System to a Mobile Phone

During a call with the audio in the vehicle, touch the Transfer Call button on the screen or press and hold the / button on the steering wheel.

To Transfer Audio to the Bluetooth System from a Mobile Phone

Use the audio transfer feature on the mobile phone. See your mobile phone manufacturer's user guide for more information. Press the Transfer to Handset button on the screen or press and hold the / button on the steering wheel.

Dual Tone Multi-Frequency (DTMF) Tones

The in-vehicle Bluetooth system can send numbers during a call. This is used when calling a menu-driven phone system.

Using the Infotainment Controls

1. Select Enter Number.
2. Select the digits on the screen then press OK to send.

Hands-Free Phone

Using Bluetooth Voice Recognition

To use voice recognition, press the / button on the steering wheel. Use the commands below for the various voice features. For additional information, say “Help” while in a voice recognition menu.

Making a Call

Calls can be made using the following commands.

Dial or Call: These commands can be used interchangeably to dial a phone number.

Digit Dial: This command allows a phone number to be dialed by entering the digits one at a time.

Re-dial: This command dials the last number used on the cell phone.

Using the “Dial” or “Call” Command

To call a number:

1. Press / . The system responds “Please Say a Command,” followed by a tone.
2. Say “Dial” or “Call.”
3. Say the entire number without pausing. The system responds with the entered number.
4. Say “Dial” or “Call”.

Once connected, the person called will be heard through the audio speakers.

To call using a name tag:

1. Press / . The system responds “Please Say a Command,” followed by a tone.
2. Say “Dial” or “Call” and then say the name tag. For example “Call John at Work.”

Once connected, the person called will be heard through the audio speakers.

Using the “Digit Dial” Command

This allows a phone number to be dialed by entering the digits one at a time.

1. Press / . The system responds “Please Say a Command,” followed by a tone.
2. Say “Digit Dial.”
3. Say each digit, one at a time, to dial. After each digit is entered, the system repeats back the digit it heard followed by a tone. After the last digit has been entered, say “Dial.”

If an unwanted number is repeated back, say “Clear” to clear the last number.

Once connected, the person called will be heard through the audio speakers.

Using the “Re-dial” Command

1. Press / . The system responds “Please Say a Command,” followed by a tone.
2. After the tone, say “Re-dial.” The system dials the last number called from the connected cell phone.

Once connected, the person called will be heard through the audio speakers.

Clearing the System

Unless information is deleted out of the vehicle Bluetooth system, it will be retained. This includes phone pairing information. For directions on how to delete this information, see “Deleting a Paired Phone/ Device.”

Trademarks and License Agreements

FCC Information

See *Radio Frequency Statement on page 13-12*.

“Made for iPhone” mean that an electronic accessory has been designed to connect specifically to iPhone and has been certified by the developer to meet Apple performance standards.

iPhone are trademarks of Apple Computer, Inc., registered in the U.S. and other countries.

Gracenote

Gracenote®, Gracenote logo and logotype, and the "Powered by Gracenote" logo are either a registered trademark or a trademark of Gracenote, Inc. in the United States and/or other countries.

Bluetooth

The Bluetooth® word mark and logos are owned by the Bluetooth® SIG, Inc. and any use of such marks by General Motors is under license. Other trademarks and trade names are those of their respective owners.

Climate Controls

Climate Control Systems
Dual Automatic Climate Control System 8-1

Air Vents
Air Vents 8-5

Maintenance
Passenger Compartment Air Filter 8-6

Climate Control Systems

Dual Automatic Climate Control System

The heating, cooling, and ventilation for the vehicle can be controlled with this system.

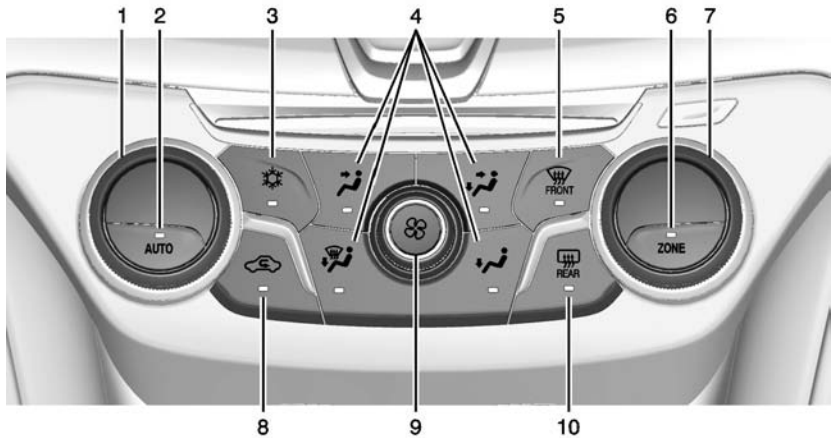

1. Driver Temperature Control
2. AUTO (Automatic Operation)
3. Air Conditioning
4. Air Delivery Mode Controls

5. Front Defrost
6. ZONE
7. Passenger Temperature Control
8. Recirculation
9. Fan Control
10. Rear Window Defogger

Automatic Operation

AUTO (Automatic): When this button is pressed, the system automatically controls the inside temperature, the air delivery mode, the air conditioning compressor, and the fan speed. When AUTO appears in the display, the system is in full automatic operation. If any of the controls are manually adjusted, the AUTO indicator turns off in the display.

1. Press the AUTO button, if the AUTO indicator does not appear on the display.
2. Adjust the temperature to a comfortable setting.
3. Adjust the air outlets as desired.
4. Let the system stabilize for a few minutes.

In cold weather, the system starts in the recirculation mode with the fan off. As the engine warms up, warm air is directed to the floor outlets, before automatically changing to bi-level mode with a reduced fan speed.

Do not cover the solar sensor in the center of the instrument panel, near the windshield. See “Sensors” later in this section.

The automatic climate control system may not work as desired if one or more of the instrument panel outlets are closed.

Manual Operation

On/Off: Press ⊛ to turn the system on or off.

⊛ **(Fan Control):** Turn clockwise or counterclockwise to increase or decrease the fan speed. The fan speed appears on the infotainment display.

Press the AUTO button to return to automatic operation.

Driver and Passenger Temperature Controls: The temperature can be adjusted separately for the driver and the passenger. Turn the temperature controls clockwise or counterclockwise to increase or decrease the temperature.

The temperature setting between 21°C (70°F) and 23°C (74°F) is recommended.

The temperature settings for each side are shown in the temperature control knob displays and the infotainment display. If the temperature control is past 30°C (86°F), the display shows HI (hottest). Turning it past 16°C (61°F), shows LO (coolest).

ZONE: Press to synchronize the driver and passenger temperatures.

Single-Zone Mode: All zones are set to the same temperature. “Driver has control” will be displayed on the

infotainment display. Turn the driver temperature control to adjust the system temperature.

Dual-Zone Mode: Allows different temperatures to be set for the driver and passenger sides.

Enter Dual-Zone mode by adjusting the passenger side temperature when in Single-Zone mode.

Air Delivery Mode Controls: Press , , , or to change the current airflow mode. The current mode selection appears in the display screen. Changing the mode cancels the automatic operation and the system goes into semi-automatic operation. Press AUTO to return to automatic operation.

Select from the following:

(Vent): Air is directed to the instrument panel outlets and console outlet.

(Bi-Level): Air is divided between the instrument panel outlets, console outlet and the floor outlets. Cooler air is directed to the upper outlets and warmer air to the floor outlets.

(Floor): Air is directed to the floor outlets with some air directed to the outer instrument panel, windshield, and side window outlets.

(Defog): Air is directed to the windshield, floor and side window outlets. Use this mode to clear the windows of fog or moisture and warm the passengers.

FRONT (Defrost): Press to turn the defrost on or off. The FRONT indicator appears in the display. A portion of the air is directed to the windshield and side window outlets, with some air directed to the outer instrument panel outlets.

For best results, clear all snow and ice from the windshield before defrosting.

Air Conditioning

(Air Conditioning): Press to turn the air conditioning system on or off. The appears on the infotainment display when the air conditioning is on. When the air conditioning is turned off, OFF appears on the infotainment display.

The air conditioning system removes moisture and heat from the air.

The air conditioning might automatically turn off during heavy acceleration, abnormal system pressure or very cold outside temperatures.

Recirculation

(Recirculation): Press to change the air intake between recirculated air and outside air. appears on the infotainment display when recirculation is activated.

The recirculation mode recycles interior air and is not recommended for extended use. If it is used for a

long period of time, the system automatically lets some outside air into the vehicle for ventilation.

Do not use the recirculation mode if occupants are smoking.

The recirculation mode cannot be turned on in defrost mode.

AUTO is displayed when the system is automatically controlling the combination of outside and recirculated air for best performance.

Rear Window Defogger

The rear window defogger uses a warming grid to remove fog or frost from the rear window. It only works when the ignition is in ON/RUN.

REAR (Rear Window Defogger): Press to turn the rear window defogger on or off. The indicator on the button turns on. The rear window defogger turns off automatically if it is left on.

⚠ Caution

Using a razor blade or sharp object on the inside rear window can damage the antenna or defogger. Repairs would not be covered by the vehicle warranty. Do not stick anything to the rear window.

Heated Mirrors: If equipped with heated outside rearview mirrors, the mirrors heat to help clear fog or frost from the surface of the mirror when the rear window defog button is pressed. See *Heated Mirrors on page 2-13*.

Sensors

The automatic climate control system uses sensors to maintain temperatures. The solar sensor is on the instrument panel near the windshield, and the outside temperature sensor is in front of the radiator.

The solar sensor monitors the solar radiation when operating in AUTO mode, adjusting the temperature, fan speed and air delivery.

The system may also supply cooler air to the side of the vehicle facing the sun. The recirculation mode will also be activated, as necessary.

The outside temperature sensor can be affected by radiant heat when the vehicle is not moving.

To prevent false temperature readings, the displayed temperature will not update at low vehicle speeds.

If the vehicle has been turned off for less than four hours, the temperature at start up will be recalled from previous operation.

Do not cover the sensors; otherwise the automatic climate control system will not work properly.

Remote Start Climate Control Operation

If equipped with the remote start feature, when it is activated, the climate control system will use the previous settings. See *Remote Vehicle Start on page 2-5*.

Regular Operation

Adjusting the Temperature

When the climate control system has stabilized, adjust the temperature to a comfortable setting.

Quick Cool Down

When entering the vehicle on a hot day, open the windows for a short time to allow the hot air to escape.

Automatic Transmission

If the vehicle is stopped for a long time in hot weather and the engine is running and the air conditioning is operating, move the shift lever to N (Neutral) or P (Park).

A/C Sound

A slight hissing sound when the air conditioning is turned off is normal.

Water Condensation

Water may drip from underneath the vehicle, this is normal.

Unsealed Dusty Roads

To help prevent dust from entering your vehicle:

- When following other vehicles on dusty roads and the dust is airborne, select .
- If the dust is not airborne, select outside air and set the fan control to high speed.
- Close all windows.
- Do not use recirculation for long periods of time.

Air Vents

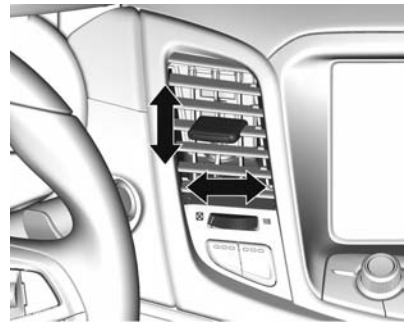

The air outlets have adjustable vanes that move up or down and left or right to change the direction of the airflow. Use the thumbwheels located near the air outlets on the instrument panel to shut off the airflow.

Operation Tips

- Clear away any ice, snow, or leaves from the air inlets at the base of the windshield that may block the flow of air into the vehicle.
- Use of non-GM approved hood deflectors may adversely affect performance of the system.
- Keep the path under the front seats clear of objects to help circulate the air inside the vehicle more effectively.

Maintenance

Passenger Compartment Air Filter

The vehicle has a passenger compartment air filter that filters the outside air entering the vehicle. The filter removes contaminants, such as pollen and dust. See your dealer for more information about filter replacement.

Driving and Operating

Driving Information
Distracted Driving 9-2
Defensive Driving 9-2
Drunk Driving 9-3
Control of a Vehicle 9-3
Braking 9-3
Steering 9-3
Off-Road Recovery 9-4
Loss of Control 9-4
Driving on Wet Roads 9-5
Highway Hypnosis 9-6
Hill and Mountain Roads 9-6
Winter Driving 9-7
If the Vehicle Is Stuck 9-8
Vehicle Load Limits 9-9

Starting and Operating
New Vehicle Break-In 9-13
Ignition Positions 9-14
Starting the Engine 9-15
Retained Accessory Power (RAP) 9-17
Shifting Into Park 9-17
Shifting out of Park 9-18
Parking over Things That Burn 9-18
Active Fuel Management® . . . 9-19

Engine Exhaust
Engine Exhaust 9-19
Running the Vehicle While Parked 9-20

Automatic Transmission
Automatic Transmission 9-20

Brakes
Antilock Brake System (ABS) 9-23
Parking Brake 9-24
Hill Start Assist (HSA) 9-24

Ride Control Systems
Traction Control/Electronic Stability Control 9-25
Limited-Slip Rear Axle 9-27

Cruise Control
Cruise Control 9-27

Fuel
Fuel 9-30
Recommended Fuel 9-30
Gasoline Specifications 9-31
California Fuel Requirements 9-31
Fuels in Foreign Countries . . . 9-31
Fuel Additives 9-31
E85 or FlexFuel 9-32
Filling the Tank 9-33
Filling a Portable Fuel Container 9-34

Towing
General Towing Information 9-35

Conversions and Add-Ons
Add-On Electrical Equipment 9-35

Driving Information

Distracted Driving

Distraction comes in many forms and can take your focus from the task of driving. Exercise good judgment and do not let other activities divert your attention away from the road. Many local governments have enacted laws regarding driver distraction. Become familiar with the local laws in your area.

To avoid distracted driving, always keep your eyes on the road, hands on the wheel, and mind on the drive.

- Do not use a phone in demanding driving situations. Use a hands-free method to place or receive necessary phone calls.
- Watch the road. Do not read, take notes, or look up information on phones or other electronic devices.
- Designate a front seat passenger to handle potential distractions.
- Become familiar with vehicle features before driving, such as programming favorite radio stations and adjusting climate control and seat settings. Program all trip information into any navigation device prior to driving.
- Wait until the vehicle is parked to retrieve items that have fallen to the floor.
- Stop or park the vehicle to tend to children.
- Keep pets in an appropriate carrier or restraint.
- Avoid stressful conversations while driving, whether with a passenger or on a cell phone.

⚠ Warning

Taking your eyes off the road too long or too often could cause a crash resulting in injury or death. Focus your attention on driving.

Refer to the Infotainment section for more information on using that system, including pairing and using a cell phone.

Defensive Driving

Defensive driving means “always expect the unexpected.” The first step in driving defensively is to wear the safety belt. See *Safety Belts on page 3-5*.

- Assume that other road users (pedestrians, bicyclists, and other drivers) are going to be careless and make mistakes. Anticipate what they might do and be ready.

- Allow enough following distance between you and the driver in front of you.
- Focus on the task of driving.

Drunk Driving

Death and injury associated with drinking and driving is a global tragedy.

⚠ Warning

Drinking and then driving is very dangerous. Your reflexes, perceptions, attentiveness, and judgment can be affected by even a small amount of alcohol. You can have a serious — or even fatal — collision if you drive after drinking.

Do not drink and drive or ride with a driver who has been drinking. Ride home in a cab; or if you are with a group, designate a driver who will not drink.

Control of a Vehicle

Braking, steering, and accelerating are important factors in helping to control a vehicle while driving.

Braking

Braking action involves perception time and reaction time. Deciding to push the brake pedal is perception time. Actually doing it is reaction time.

Average driver reaction time is about three-quarters of a second. In that time, a vehicle moving at 100 km/h (60 mph) travels 20 m (66 ft), which could be a lot of distance in an emergency.

Helpful braking tips to keep in mind include:

- Keep enough distance between you and the vehicle in front of you.
- Avoid needless heavy braking.
- Keep pace with traffic.

If the engine ever stops while the vehicle is being driven, brake normally but do not pump the brakes. Doing so could make the pedal harder to push down. If the engine stops, there will be some power brake assist but it will be used when the brake is applied. Once the power assist is used up, it can take longer to stop and the brake pedal will be harder to push.

Steering

Electric Power Steering

The vehicle has electric power steering. It does not have power steering fluid. Regular maintenance is not required.

If power steering assist is lost due to a system malfunction, the vehicle can be steered, but may require increased effort.

See your dealer if there is a problem.

If the steering wheel is turned until it reaches the end of its travel and is held against that position for an extended period of time, power steering assist may be reduced.

If the steering assist is used for an extended period of time, power assist may be reduced.

Normal use of the power steering assist should return when the system cools down.

See specific vehicle steering messages under *Service Vehicle Messages on page 5-24*. See your dealer if there is a problem.

Curve Tips

- Take curves at a reasonable speed.
- Reduce speed before entering a curve.
- Maintain a reasonable steady speed through the curve.
- Wait until the vehicle is out of the curve before accelerating gently into the straightaway.

Steering in Emergencies

- There are some situations when steering around a problem may be more effective than braking.
- Holding both sides of the steering wheel allows you to turn 180 degrees without removing a hand.
- The Antilock Brake System (ABS) allows steering while braking.

Off-Road Recovery

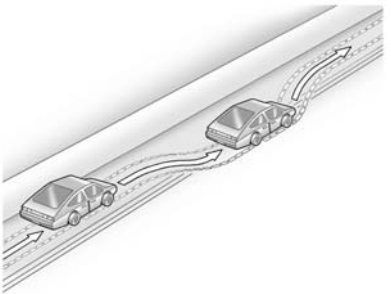

The vehicle's right wheels can drop off the edge of a road onto the shoulder while driving. Follow these tips:

1. Ease off the accelerator and then, if there is nothing in the way, steer the vehicle so that it straddles the edge of the pavement.
2. Turn the steering wheel about one-eighth of a turn, until the right front tire contacts the pavement edge.
3. Turn the steering wheel to go straight down the roadway.

Loss of Control

Skidding

There are three types of skids that correspond to the vehicle's three control systems:

- Braking Skid — wheels are not rolling.

- Steering or Cornering Skid — too much speed or steering in a curve causes tires to slip and lose cornering force.
- Acceleration Skid — too much throttle causes the driving wheels to spin.

Defensive drivers avoid most skids by taking reasonable care suited to existing conditions, and by not overdriving those conditions. But skids are always possible.

If the vehicle starts to slide, follow these suggestions:

- Ease your foot off the accelerator pedal and steer the way you want the vehicle to go. The vehicle may straighten out. Be ready for a second skid if it occurs.
- Slow down and adjust your driving according to weather conditions. Stopping distance can be longer and vehicle control can be affected when traction is reduced by water, snow, ice, gravel, or other material on the road. Learn to recognize warning clues — such as enough water, ice, or packed snow on the road to make a mirrored surface — and slow down when you have any doubt.
- Try to avoid sudden steering, acceleration, or braking, including reducing vehicle speed by shifting to a lower gear. Any sudden changes could cause the tires to slide.

Remember: Antilock brakes help avoid only the braking skid.

Driving on Wet Roads

Rain and wet roads can reduce vehicle traction and affect your ability to stop and accelerate. Always drive slower in these types of driving conditions and avoid driving through large puddles and deep-standing or flowing water.

⚠ Warning

Wet brakes can cause crashes. They might not work as well in a quick stop and could cause pulling to one side. You could lose control of the vehicle.

After driving through a large puddle of water or a car/vehicle wash, lightly apply the brake pedal until the brakes work normally.

Flowing or rushing water creates strong forces. Driving through flowing water could cause the vehicle to be carried away. If this happens, you and other vehicle occupants could drown. Do not ignore police warnings and be very cautious about trying to drive through flowing water.

Hydroplaning

Hydroplaning is dangerous. Water can build up under the vehicle's tires so they actually ride on the water. This can happen if the road is wet enough and you are going fast enough. When the vehicle is hydroplaning, it has little or no contact with the road.

There is no hard and fast rule about hydroplaning. The best advice is to slow down when the road is wet.

Other Rainy Weather Tips

Besides slowing down, other wet weather driving tips include:

- Allow extra following distance.
- Pass with caution.
- Keep windshield wiping equipment in good shape.
- Keep the windshield washer fluid reservoir filled.
- Have good tires with proper tread depth. See *Tires on page 10-40*.
- Turn off cruise control.

Highway Hypnosis

Always be alert and pay attention to your surroundings while driving. If you become tired or sleepy, find a safe place to park the vehicle and rest.

Other driving tips include:

- Keep the vehicle well ventilated.
- Keep the interior temperature cool.
- Keep your eyes moving — scan the road ahead and to the sides.
- Check the rearview mirror and vehicle instruments often.

Hill and Mountain Roads

Driving on steep hills or through mountains is different than driving on flat or rolling terrain. Tips for driving in these conditions include:

- Keep the vehicle serviced and in good shape.
- Check all fluid levels and brakes, tires, cooling system, and transmission.
- Shift to a lower gear when going down steep or long hills.

⚠ Warning

Using the brakes to slow the vehicle on a long downhill slope can cause brake overheating, can reduce brake performance, and could result in a loss of braking. Shift the transmission to a lower gear to let the engine assist the brakes on a steep downhill slope.

⚠ Warning

Coasting downhill in N (Neutral) or with the ignition off is dangerous. This can cause overheating of the brakes and

(Continued)

Warning (Continued)

loss of steering. Always have the engine running and the vehicle in gear.

- Stay in your own lane. Do not swing wide or cut across the center of the road. Drive at speeds that let you stay in your own lane.
- Be alert on top of hills; something could be in your lane (stalled car, accident).
- Pay attention to special road signs (falling rocks area, winding roads, long grades, passing or no-passing zones) and take appropriate action.

Winter Driving

Driving on Snow or Ice

Drive carefully when there is snow or ice between the tires and the road, creating less traction or grip.

Wet ice can occur at about 0°C (32°F) when freezing rain begins to fall, resulting in even less traction. Avoid driving on wet ice or in freezing rain until roads can be treated with salt or sand.

Drive with caution, whatever the condition. Accelerate gently so traction is not lost. Accelerating too quickly causes the wheels to spin and makes the surface under the tires slick, so there is even less traction.

Try not to break the fragile traction. If you accelerate too fast, the drive wheels will spin and polish the surface under the tires even more.

Traction Control should be turned on. See *Traction Control/Electronic Stability Control on page 9-25*.

The Antilock Brake System (ABS) improves vehicle stability during hard stops on slippery roads, but apply the brakes sooner than when on dry pavement. See *Antilock Brake System (ABS) on page 9-23*.

Allow greater following distance on any slippery road and watch for slippery spots. Icy patches can occur on otherwise clear roads in shaded areas. The surface of a curve or an overpass can remain icy when the surrounding roads are clear. Avoid sudden steering maneuvers and braking while on ice.

Turn off cruise control on slippery surfaces.

Blizzard Conditions

Being stuck in snow can be a serious situation. Stay with the vehicle unless there is help nearby. If possible, use Roadside Assistance. See *Roadside Assistance Program on page 13-4*. To get help and keep everyone in the vehicle safe:

- Turn on the hazard warning flashers.
- Tie a red cloth to an outside mirror.

⚠ Warning

Snow can trap engine exhaust under the vehicle. This may cause exhaust gases to get inside. Engine exhaust contains carbon monoxide (CO) which cannot be seen or smelled. It can cause unconsciousness and even death.

If the vehicle is stuck in the snow:

- Clear away snow from around the base of your vehicle, especially any that is blocking the exhaust pipe.
- Check again from time to time to be sure snow does not collect there.
- Open a window about 5 cm (2 in) on the side of the vehicle that is away from the wind to bring in fresh air.

(Continued)

Warning (Continued)

- Fully open the air outlets on or under the instrument panel.
- Adjust the climate control system to a setting that circulates the air inside the vehicle and set the fan speed to the highest setting. See “Climate Control Systems”.

For more information about carbon monoxide, see *Engine Exhaust on page 9-19*.

To save fuel, run the engine for only short periods as needed to warm the vehicle and then shut the engine off and close the window most of the way to save heat. Repeat this until help arrives but only when you feel really uncomfortable from the cold. Moving about to keep warm also helps.

If it takes some time for help to arrive, now and then when you run the engine, push the accelerator pedal slightly so the engine runs faster than the idle speed. This keeps the battery charged to restart the vehicle and to signal for help with the headlamps. Do this as little as possible to save fuel.

If the Vehicle Is Stuck

Slowly and cautiously spin the wheels to free the vehicle when stuck in sand, mud, ice, or snow.

If stuck too severely for the traction system to free the vehicle, turn the traction system off and use the rocking method. See *Traction Control/Electronic Stability Control on page 9-25*.

⚠ Warning

If the vehicle's tires spin at high speed, they can explode, and you or others could be injured. The vehicle can overheat, causing an engine compartment fire or other damage. Spin the wheels as little as possible and avoid going above 56 km/h (35 mph).

Rocking the Vehicle to Get it Out

Turn the steering wheel left and right to clear the area around the front wheels. Turn off any traction system. Shift back and forth between R (Reverse) and a low forward gear, spinning the wheels as little as possible. To prevent transmission wear, wait until the wheels stop spinning before shifting gears. Release the accelerator pedal while shifting, and press lightly on the accelerator pedal when the transmission is in gear.

Slowly spinning the wheels in the forward and reverse directions causes a rocking motion that could free the vehicle. If that does not get the vehicle out after a few tries, it might need to be towed out. If the vehicle does need to be towed out, see *Towing the Vehicle on page 10-72*.

Vehicle Load Limits

It is very important to know how much weight the vehicle can carry. This weight is called the vehicle capacity weight and includes the weight of all occupants, cargo, and all nonfactory-installed options. Two labels on the vehicle show how much weight it may properly carry: the Tire and Loading Information label and the Certification label.

⚠ Warning

Do not load the vehicle any heavier than the Gross Vehicle Weight Rating (GVWR), or either the maximum front or rear Gross Axle Weight Rating (GAWR). This can cause systems to break and change the way the vehicle handles. This could cause loss of control and a crash. Overloading can also shorten the life of the vehicle.

Tire and Loading Information Label

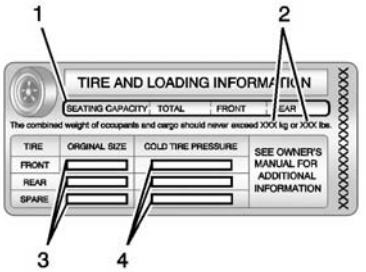

Label Example

A vehicle-specific Tire and Loading Information label is attached to the vehicle's center pillar (B-pillar). The Tire and Loading Information label shows the number of occupant seating positions (1), and the maximum vehicle capacity weight (2) in kilograms and pounds.

The Tire and Loading Information label also shows the tire size of the original equipment tires (3) and the recommended cold tire inflation pressures (4). For more information on tires and inflation see *Tires on page 10-40* and *Tire Pressure on page 10-48*.

There is also important loading information on the Certification label. It tells you the Gross Vehicle Weight Rating (GVWR) and the Gross Axle Weight Rating (GAWR) for the front and rear axle. See “Certification Label” later in this section.

“Steps for Determining Correct Load Limit–

1. Locate the statement "The combined weight of occupants and cargo should never exceed XXX kg or XXX lbs." on your vehicle’s placard.
2. Determine the combined weight of the driver and passengers that will be riding in your vehicle.
3. Subtract the combined weight of the driver and passengers from XXX kg or XXX lbs.
4. The resulting figure equals the available amount of cargo and luggage load capacity. For example, if the "XXX" amount equals 1400 lbs. and there will be five 150 lb passengers in your vehicle, the amount of available cargo and luggage load capacity is 650 lbs. (1400-750 (5 x 150) = 650 lbs.)

5. Determine the combined weight of luggage and cargo being loaded on the vehicle. That weight may not safely exceed the available cargo and luggage load capacity calculated in Step 4.
6. If your vehicle will be towing a trailer, load from your trailer will be transferred to your vehicle. Consult this manual to determine how this reduces the available cargo and luggage load capacity of your vehicle.”

This vehicle is neither designed nor intended to tow a trailer.

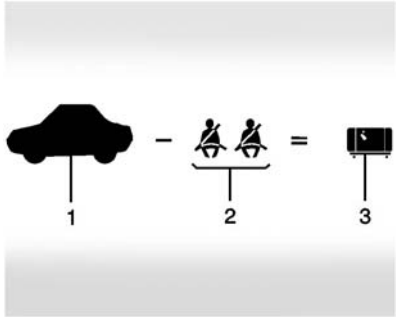

Example 1

1. Vehicle Capacity Weight for Example 1 = 453 kg (1,000 lbs).
2. Subtract Occupant Weight @ 68 kg (150 lbs) × 2 = 136 kg (300 lbs).
3. Available Occupant and Cargo Weight = 317 kg (700 lbs).

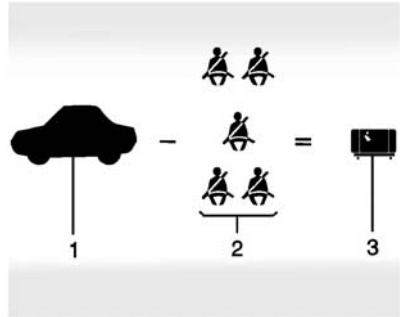

Example 2

1. Vehicle Capacity Weight for Example 2 = 453 kg (1,000 lbs).
2. Subtract Occupant Weight @ 68 kg (150 lbs) × 5 = 340 kg (750 lbs).
3. Available Cargo Weight = 113 kg (250 lbs).

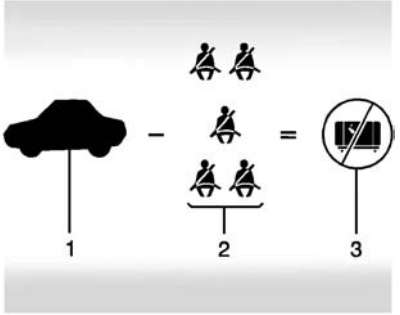

Example 3

1. Vehicle Capacity Weight for Example 3 = 453 kg (1,000 lbs).
2. Subtract Occupant Weight @ 91 kg (200 lbs) × 5 = 453 kg (1,000 lbs).
3. Available Cargo Weight = 0 kg (0 lbs).

Refer to the vehicle's Tire and Loading Information label for specific information about the vehicle's capacity weight and seating positions. The combined weight of the driver, passengers, and cargo should never exceed the vehicle's capacity weight.

Certification Label

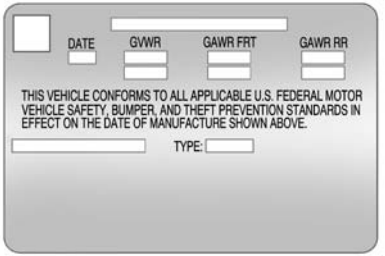

Label Example

A vehicle-specific Certification label is attached to the vehicle's center pillar (B-pillar). The label tells the gross weight capacity of the vehicle, called the Gross Vehicle Weight Rating (GVWR). The GVWR includes the weight of the vehicle, all occupants, fuel, and cargo. Never exceed the GVWR for the vehicle, or the Gross Axle Weight Rating (GAWR) for either the front or rear axle.

And, if there is a heavy load, it should be spread out. See “Steps for Determining Correct Load Limit” earlier in this section.

⚠ Warning

Do not load the vehicle any heavier than the Gross Vehicle Weight Rating (GVWR), or either the maximum front or rear Gross Axle Weight Rating (GAWR). This can cause systems to break and change the way the vehicle handles. This could cause loss of control and a crash. Overloading can also shorten the life of the vehicle.

If you put things inside the vehicle — like suitcases, tools, packages, or anything else — they will go as fast as the vehicle goes. If you have to stop or turn quickly, or if there is a crash, they will keep going.

⚠ Warning

Things inside the vehicle can strike and injure people in a sudden stop or turn, or in a crash.

- Put things in the cargo area of the vehicle. In the cargo area, put them as far forward as possible. Try to spread the weight evenly.

(Continued)

Warning (Continued)

- Never stack heavier things, like suitcases, inside the vehicle so that some of them are above the tops of the seats.
- Do not leave an unsecured child restraint in the vehicle.
- Secure loose items in the vehicle.
- Do not leave a seat folded down unless needed.

Starting and Operating

New Vehicle Break-In

Use the following precautions to improve performance:

- For the first 1000 km (621 mi):

  Do not make full throttle starts.

  Avoid downshifting to brake or slow the vehicle.

  Do not drive at any one constant speed.

  Use moderate acceleration in lower gears.

  Avoid vehicle speeds above 110 km/h (68 mph).
- Between the first 1000 km (621 mi) and 5000 km (3,107 mi), heavy acceleration in lower gears may be used.

  Vehicle speeds above 110 km/h (68 mph) should be limited to five minutes per use.

If equipped, see *Vehicle Speed Limiter - SEO SGT on page 15-15*.

- Avoid making hard stops for the first 350 km (217 mi) to avoid premature wear and early replacement of brakes.

Ignition Positions

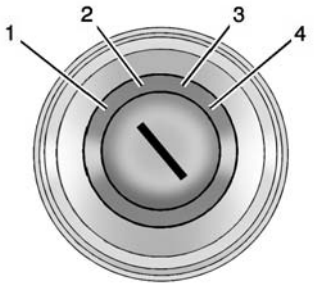

The ignition switch has four different positions.

The key must be fully extended to start the vehicle.

To shift out of P (Park), the ignition must be in ON/RUN and the regular brake pedal applied.

1 (STOPPING THE ENGINE/LOCK/OFF): When the vehicle is stopped, turn the ignition switch to LOCK/OFF to turn the engine off.

This position locks the steering wheel, ignition, and transmission.

The ignition switch can bind in the LOCK/OFF position with the wheels turned off center. If this happens, move the steering wheel from right to left while turning the key to ACC/ACCESSORY. If this does not work, then the vehicle needs service.

Do not turn the engine off when the vehicle is moving. This will cause a loss of power assist in the brake and steering systems and disable the airbags.

If the vehicle must be shut off in an emergency:

1. Brake using a firm and steady pressure. Do not pump the brakes repeatedly. This may deplete power assist, requiring increased brake pedal force.
2. Shift the vehicle to N (Neutral). This can be done while the vehicle is moving. After shifting to N (Neutral), firmly apply the brakes and steer the vehicle to a safe location.
3. Come to a complete stop, shift to P (Park), and turn the ignition to OFF. On vehicles with an automatic transmission, the shift lever must be in P (Park) to turn the ignition switch to the OFF position.
4. Set the parking brake. See *Parking Brake on page 9-24*.

⚠ Warning

Turning off the vehicle while moving may cause loss of power assist in the brake and steering systems and disable the airbags. While driving, only shut the vehicle off in an emergency.

If the vehicle cannot be pulled over, and must be shut off while driving, turn the ignition to ACC/ACCESSORY.

⚠ Caution

Using a tool to force the key to turn in the ignition could cause damage to the switch or break the key. Use the correct key, make sure it is all the way in, and turn it only with your hand. If the key cannot be turned by hand, see your dealer.

2 (ACC/ACCESSORY): This is the position in which you can operate things like the radio and the windshield wipers when the engine is off.

3 (ON/RUN): This position can be used to operate the electrical accessories and to display some instrument cluster warning and indicator lights. This position can also be used for service and diagnostics, and to verify the proper operation of the malfunction indicator lamp as may be required for emission inspection purposes. The switch stays in this position when the engine is running.

If you leave the key in the ACC/ACCESSORY or ON/RUN position with the engine off, the battery could be drained. You may not be able to start the vehicle if the battery is allowed to drain for an extended period of time.

4 (START): This is the position that starts the engine. When the engine starts, release the key. The ignition switch returns to ON/RUN for driving.

A warning tone will sound when the driver door is opened, the ignition is in ACC/ACCESSORY or LOCK/OFF, and the key is in the ignition. If the ignition becomes difficult to turn, see *Keys on page 2-1*.

If the vehicle stalls after five seconds, return the key to the LOCK position. Slowly rotate the key to the START position. If the security warning lamp flashes, contact your dealer.

Starting the Engine

Move the shift lever to P (Park) or N (Neutral). The engine will not start in any other position. To restart the vehicle when it is already moving, use N (Neutral) only.

⚠ Caution

Do not try to shift to P (Park) if the vehicle is moving. If you do, you could damage the transmission. Shift to P (Park) only when the vehicle is stopped.

⚠ Caution

If you add electrical parts or accessories, you could change the way the engine operates. Any resulting damage would not be covered by the vehicle warranty. See *Add-On Electrical Equipment on page 9-35*.

Starting Procedure

1. With your foot off the accelerator pedal, turn the ignition key to START. When the engine starts, let go of the ignition.

   The idle speed will go down as your engine gets warm. Do not race the engine immediately after starting it. Operate the engine and transmission gently to allow the oil to warm up and lubricate all moving parts.

   The vehicle has a Computer-Controlled Cranking System. This feature assists in starting the engine and protects components. If the ignition key is turned to the START position, and then released when the engine begins cranking, the engine will continue cranking for a few seconds or until the vehicle starts. If the engine does not start and the key is held in START for many seconds, cranking will be stopped after 15 seconds to prevent cranking motor damage. To prevent gear damage, this system also prevents cranking if the engine is already running. Engine cranking can be stopped by turning the ignition switch to ACC/ACCESSORY or LOCK/OFF.

⚠ Caution

Cranking the engine for long periods of time, by returning the ignition to the START position immediately after cranking has ended, can overheat and damage the cranking motor, and drain the battery. Wait at least 15 seconds between each try, to let the cranking motor cool down.

2. If the engine does not start after five to 10 seconds, especially in very cold weather (below −18°C or 0°F), it could be flooded with too much gasoline. Try pushing the accelerator pedal all the way to the floor and holding it there

as you hold the key in START for up to a maximum of 15 seconds. Wait at least 15 seconds between each try, to allow the cranking motor to cool down. When the engine starts, let go of the key or button, and the accelerator. If the vehicle starts briefly but then stops again, do the same thing. This clears the extra gasoline from the engine. Do not race the engine immediately after starting it. Operate the engine and transmission gently until the oil warms up and lubricates all moving parts.

Retained Accessory Power (RAP)

The power windows will operate when the key is in the ON/RUN or ACC/ACCESSORY positions.

Once the ignition is turned off, RAP allows the power windows to continue to operate for up to 10 minutes. If a door is opened during this time, they will be deactivated.

The audio system will be deactivated only if the driver door is opened.

Shifting Into Park

Use this procedure to shift into P (Park):

1. Hold the brake pedal down and set the parking brake.

   See *Parking Brake on page 9-24* for more information.

2. Move the shift lever into P (Park) by pulling the shift lever toward you and moving it up as far as it will go.
3. Turn the ignition to LOCK/OFF.
4. Remove the key.

Leaving the Vehicle With the Engine Running

⚠ Warning

It can be dangerous to leave the vehicle with the engine running. It could overheat and catch fire.

It is dangerous to get out of the vehicle if the shift lever is not fully in P (Park) with the parking brake firmly set. The vehicle can roll.

Do not leave the vehicle when the engine is running. If you have left the engine running, the vehicle can move suddenly. You or others could be injured. To be sure the vehicle will not move, even when you are on fairly level ground, always set the parking brake and move the shift lever to P (Park). See *Shifting Into Park on page 9-17*.

If you have to leave the vehicle with the engine running, the vehicle must be in P (Park) and the parking brake set.

Release the lever and check that the shift lever cannot be moved out of P (Park).

Torque Lock

Torque lock is when the weight of the vehicle puts too much force on the parking pawl in the transmission. This happens when parking on a hill and shifting the transmission into P (Park) is not done properly and then it is difficult to shift out of P (Park). To prevent torque lock, set the parking brake and then shift into P (Park). To find out how, see “Shifting Into Park” listed previously.

If torque lock does occur, the vehicle may need to be pushed uphill by another vehicle to relieve the parking pawl pressure, so you can shift out of P (Park).

Shifting out of Park

The transmission has an automatic transmission shift lock control system. The key must be in the ON/RUN position, and the brake pedal pressed so the shift lever can be moved from the P (Park) position.

To shift out of P (Park):

1. Apply the brake pedal.
2. Release the parking brake. See *Parking Brake on page 9-24*.
3. Turn the ignition to ON/RUN.
4. Pull the shift lever toward you.
5. Move the shift lever to the desired position.

If you still are unable to shift out of P (Park):

1. Fully release the shift lever.
2. Hold the brake pedal down and pull the shift lever again.
3. Move the shift lever to the desired position.

Parking over Things That Burn

⚠ Warning

Things that can burn could touch hot exhaust parts under the vehicle and ignite. Do not park over papers, leaves, dry grass, or other things that can burn.

Active Fuel Management®

6.0L V8

This system allows the engine to operate on either all or half of its cylinders, depending on the driving conditions.

When less power is required, such as cruising at a constant vehicle speed, the system will operate in the half cylinder mode, allowing the vehicle to achieve better fuel economy. When greater power demands are required, such as accelerating from a stop, passing, or merging onto a freeway, the system will maintain full-cylinder operation.

Engine Exhaust

⚠ Warning

Engine exhaust contains carbon monoxide (CO) which cannot be seen or smelled. Exposure to CO can cause unconsciousness and even death.

Exhaust may enter the vehicle if:

- The vehicle idles in areas with poor ventilation (parking garages, tunnels, deep snow that may block underbody airflow or tail pipes).
- The exhaust smells or sounds strange or different.
- The exhaust system leaks due to corrosion or damage.
- The vehicle exhaust system has been modified, damaged, or improperly repaired.

(Continued)

Warning (Continued)

- There are holes or openings in the vehicle body from damage or aftermarket modifications that are not completely sealed.

If unusual fumes are detected or if it is suspected that exhaust is coming into the vehicle:

- Drive it only with the windows completely down.
- Have the vehicle repaired immediately.

Never park the vehicle with the engine running in an enclosed area such as a garage or a building that has no fresh air ventilation.

Running the Vehicle While Parked

It is better not to park with the engine running.

If the vehicle is left with the engine running, follow the proper steps to be sure the vehicle will not move. See *Shifting Into Park on page 9-17* and *Engine Exhaust on page 9-19*.

Automatic Transmission

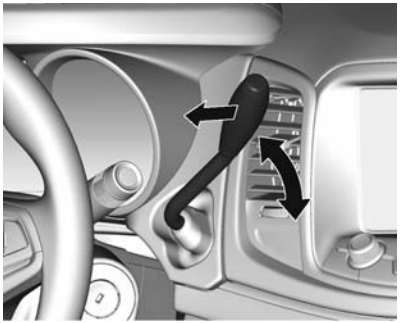

Gear positions are indicated on the instrument panel.

The engine will not start unless the shift lever is in P (Park) or N (Neutral).

P (Park): This position locks the wheels. It is the best position to use when starting the engine because the vehicle cannot move easily.

⚠ Warning

It is dangerous to get out of the vehicle if the shift lever is not fully in P (Park) with the parking brake firmly set. The vehicle can roll.

(Continued)

Warning (Continued)

Do not leave the vehicle when the engine is running. If you have left the engine running, the vehicle can move suddenly. You or others could be injured. To be sure the vehicle will not move, even when you are on fairly level ground, always set the parking brake and move the shift lever to P (Park). See *Shifting Into Park on page 9-17*.

Make sure the shift lever is fully in P (Park) before starting the engine. The vehicle has an automatic transmission shift lock control system. The regular brake must be fully applied first and then the shift lever pulled before shifting from P (Park) when the ignition is in ON/RUN. If you cannot shift out of P (Park), ease pressure on the shift lever, then push the shift lever all the way into P (Park) as you maintain brake application. Then pull the shift lever and move the shift lever into another gear. See *Shifting out of Park on page 9-18*.

R (Reverse): Use this gear to back up.

⚠ Caution

Shifting to R (Reverse) while the vehicle is moving forward could damage the transmission. The repairs would not be covered by the vehicle warranty. Shift to R (Reverse) only after the vehicle is stopped.

To rock the vehicle back and forth to get out of snow, ice, or sand without damaging the transmission, see *If the Vehicle Is Stuck on page 9-8*.

N (Neutral): In this position, the engine does not connect with the wheels. To restart the engine when the vehicle is already moving, use N (Neutral) only.

⚠ Warning

Shifting into a drive gear while the engine is running at high speed is dangerous. Unless your foot is firmly on the brake pedal, the vehicle could move very rapidly. You could lose control and hit people or objects. Do not shift into a drive gear while the engine is running at high speed.

⚠ Caution

Shifting out of P (Park) or N (Neutral) with the engine running at high speed may damage the transmission. The repairs would not be covered by the vehicle warranty. Be sure the engine is not running at high speed when shifting the vehicle.

D (Drive): This position is for normal driving. It provides the best fuel economy.

> **⚠ Caution**
>
> If the vehicle accelerates slowly, or does not shift gears, the transmission could be damaged. Have the vehicle serviced right away.

L (Low): In this position the transmission will shift to a low gear.

It provides more engine braking but lower fuel economy than D (Drive).

Use on very steep hills or in deep snow or mud.

> **⚠ Caution**
>
> Do not use the accelerator pedal to hold the vehicle stationary on an uphill slope. Use the brakes.

Sport Shift Mode

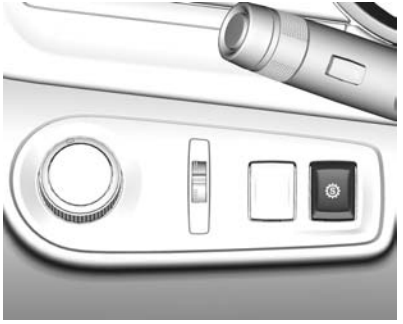

The Sport Shift button is to the left of the steering column.

Sport Shift mode can be selected where maximum responsiveness is required.

When operated in Sport Shift mode, the transmission will delay upshifts and allow earlier downshifts.

In addition, the transmission can sense enthusiastic driving, at which point it may delay upshifting and downshift earlier when braking. This is designed to maximize vehicle performance.

To activate Sport Shift mode:

1. Press the Sport Shift button.

   SPORT MODE ON is displayed on the DIC, and the sport shift indicator illuminates. See *Sport Mode Light on page 5-14*.

2. To return to Normal Shift mode, press the Sport Shift button again.

   SPORT MODE OFF is displayed on the DIC, and the sport shift indicator turns off.

On the bottom of the display, S appears as long as Sport Shift mode is selected.

Normal Shift Mode

Normal Shift mode is recommended for normal or freeway driving, as it provides optimum fuel economy.

When the shift lever is moved to D Drive, Normal Shift mode is selected.

Brakes

Antilock Brake System (ABS)

This vehicle has ABS, an advanced electronic braking system that helps prevent a braking skid.

When the vehicle begins to drive away, ABS checks itself.
A momentary motor or clicking noise might be heard while this test is going on, and it might even be noticed that the brake pedal moves a little. This is normal.

If there is a problem with ABS, this warning light stays on. See *Antilock Brake System (ABS) Warning Light on page 5-14*.

If driving safely on a wet road and it becomes necessary to slam on the brakes and continue braking to avoid a sudden obstacle, a computer senses that the wheels are slowing down. If one of the wheels is about to stop rolling, the computer will separately work the brakes at each wheel.

ABS can change the brake pressure to each wheel, as required, faster than any driver could. This can help you steer around the obstacle while braking hard.

As the brakes are applied, the computer keeps receiving updates on wheel speed and controls braking pressure accordingly.

Remember: ABS does not change the time needed to get a foot up to the brake pedal or always decrease stopping distance. If you get too close to the vehicle in front of you, there will not be enough time to apply the brakes if that vehicle suddenly slows or stops. Always leave enough room up ahead to stop, even with ABS.

Using ABS

Do not pump the brakes. Just hold the brake pedal down firmly and let ABS work. You might hear the ABS pump or motor operating and feel the brake pedal pulsate, but this is normal.

Braking in Emergencies

ABS allows you to steer and brake at the same time. In many emergencies, steering can help more than even the very best braking.

Parking Brake

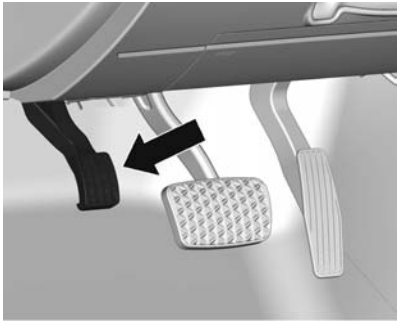

The parking brake pedal is to the left of the brake pedal, near the driver door.

To set the parking brake, hold the brake pedal down, then push the parking brake pedal down to its fully applied position.

If the ignition is on, the parking brake light will come on. See *Parking Brake Light on page 5-14*.

To release the parking brake, hold the regular brake pedal down, then push down momentarily on the parking brake pedal until you feel the pedal release. Slowly pull your foot up off the parking brake pedal. If the parking brake is not released when you begin to drive, the parking brake light will flash and a chime will sound warning you that the parking brake is still on.

If the ignition is on when the parking brake is released, the parking brake light will go off.

⚠ Caution

Driving with the parking brake on can overheat the brake system and cause premature wear or damage to brake system parts. Make sure that the parking brake is fully released and the brake warning light is off before driving.

Hill Start Assist (HSA)

This vehicle has an HSA feature, which may be useful when the vehicle is stopped on a grade. This feature is designed to prevent the vehicle from rolling, either forward or rearward, during vehicle drive off. After the driver completely stops and holds the vehicle in a complete standstill on a grade, HSA will be automatically activated. During the transition period between when the driver releases the brake pedal and starts to accelerate to drive off on a grade, HSA holds the braking pressure for a maximum of two seconds to ensure that there is no rolling. The brakes will automatically release when the accelerator pedal is applied within the two-second window. It will not activate if the vehicle is in a drive gear and facing downhill, or if the vehicle is facing uphill and in R (Reverse).

Ride Control Systems

Traction Control/ Electronic Stability Control

The vehicle has a Traction Control System (TCS) and StabiliTrak®, an electronic stability control system. These systems help limit wheel slip and assist the driver in maintaining control, especially on slippery road conditions.

TCS activates if it senses that any of the drive wheels are spinning or beginning to lose traction. When this happens, the system brakes the spinning wheel(s) and/or reduces engine power to limit wheel spin.

StabiliTrak activates when the computer senses a difference between the intended path and the direction the vehicle is actually traveling. StabiliTrak selectively applies braking pressure at any one of the vehicle's brakes to help steer the vehicle in the intended direction.

If cruise control is being used and traction control or StabiliTrak begins to limit wheel spin, cruise control will disengage. Cruise control may be turned back on when road conditions allow.

Both systems come on automatically when the vehicle is started and begins to move. The systems may be heard or felt while they are operating or while performing diagnostic checks. This is normal and does not mean there is a problem with the vehicle.

It is recommended to leave both systems on for normal driving conditions, but It may be necessary to turn TCS off if the vehicle gets stuck in sand, mud, ice, or snow. See *If the Vehicle Is Stuck on page 9-8* and “Turning the Systems Off and On” later in this section.

The indicator light for both systems is in the instrument cluster. This light will:

- Flash when TCS is limiting wheel spin.
- Flash when StabiliTrak is activated.
- Turn on and stay on when either system is not working.

If either system fails to turn on or to activate, a message displays in the Driver Information Center (DIC), and comes on and stays on to indicate that the system is inactive and is not assisting the driver in maintaining control. The vehicle is safe to drive, but driving should be adjusted accordingly.

If comes on and stays on:

1. Stop the vehicle.
2. Turn the engine off and wait 15 seconds.
3. Start the engine.

Drive the vehicle. if comes on and stays on, the vehicle may need more time to diagnose the problem If the condition persists, see your dealer.

Turning the Systems Off and On

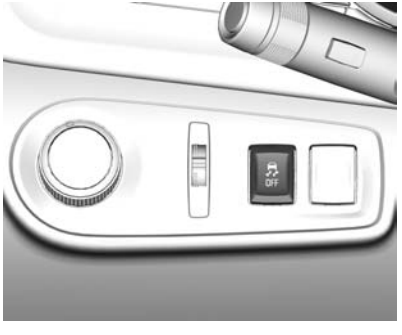

⚠ Caution

Do not repeatedly brake or accelerate heavily when TCS is off. The vehicle driveline could be damaged.

If TCS is limiting wheel spin when the TCS/StabiliTrak button is pressed, the system will not turn off until the wheels stop spinning.

To turn off both TCS and StabiliTrak, press and hold the TCS/StabiliTrak button until the traction off light and StabiliTrak OFF light come on and stay on in the instrument cluster.

To turn TCS and StabiliTrak on again, press and release the TCS/StabiliTrak button. The traction off light and StabiliTrak OFF light in the instrument cluster turn off.

Adding accessories can affect the vehicle performance. See *Accessories and Modifications on page 10-2*.

StabiliTrak/TCS Performance Mode

The StabiliTrak/TCS system can be placed into the Performance mode by pressing and releasing the TCS/StabiliTrak button. This mode allows increased performance while accelerating and/or cornering. This is accomplished by regulating and optimizing engine and brake performance.

The TCS/StabiliTrak OFF light will come on. The message PERFORMANCE MODE will appear momentarily in the DIC to indicate that the Performance mode has

been entered. The display will then return to the previous page. To return the system to StabiliTrak, press the TCS/StabiliTrak button. The TCS/StabiliTrak OFF light will turn off and the StabiliTrak system will come back on.

Limited-Slip Rear Axle

Vehicles with a limited-slip rear axle can give more traction on snow, mud, ice, sand, or gravel. When traction is low, this feature allows the drive wheel with the most traction to move the vehicle. The limited-slip rear axle also gives the driver enhanced control when cornering hard or completing a maneuver, such as a lane change.

Cruise Control

With cruise control, the vehicle can maintain a speed of about 40 km/h (25 mph) or more without keeping your foot on the accelerator. Cruise control does not work at speeds below 40 km/h (25 mph).

If the brakes are applied, the cruise control is disengaged.

If the vehicle has the StabiliTrak® system and begins to limit wheel spin while using cruise control, the cruise control automatically disengages. See *Traction Control/ Electronic Stability Control on page 9-25*. When road conditions allow you to safely use it again, the cruise control can be turned back on.

⚠ Warning

Cruise control can be dangerous where you cannot drive safely at a steady speed. Do not use the cruise control on winding roads or in heavy traffic.

Cruise control can be dangerous on slippery roads. On such roads, fast changes in tire traction can cause excessive wheel slip, and you could lose control. Do not use cruise control on slippery roads.

(On/Off): Press to turn the cruise control system on and off. A white cruise control indicator appears in the instrument cluster.

(Cancel): Press to disengage cruise control without erasing the set speed from memory.

RES/+ (Resume/Accel): Move the thumbwheel up briefly to make the vehicle resume to a previously set speed or hold upwards to accelerate. If cruise control is already active, use to increase vehicle speed.

SET/− (Set/Coast): Move the thumbwheel down briefly to set the speed and activate cruise control. If cruise control is already active, use to decrease speed.

Setting Cruise Control

If the cruise button is on when not in use, it could get bumped and go into cruise when not desired. Keep the cruise button turned off when cruise control is not being used.

To set a speed:

1. Press .
2. Get to the speed desired.
3. Move the thumbwheel down toward SET/− and release it. The cruise control indicator turns green.
4. Remove foot from the accelerator.

Resuming a Set Speed

If the cruise control is set at a desired speed and then the brakes are applied, the cruise control is disengaged without erasing the set speed from memory.

Once the vehicle reaches about 40 km/h (25 mph) or more, move the thumbwheel up toward RES/+ briefly. The vehicle returns to the previous set speed.

Increasing Speed While Using Cruise Control

If the cruise control system is already activated:

- Move the thumbwheel up toward RES/+ and hold it until the vehicle accelerates to the desired speed, and then release it.

- To increase the speed in small increments, move the thumbwheel up toward RES/+ briefly and then release it. Each time this is done, the vehicle goes about 1.6 km/h (1 mph) faster.

Reducing Speed While Using Cruise Control

If the cruise control system is already activated:

- Move the thumbwheel toward SET/− and hold until the desired lower speed is reached, then release it.
- To slow down in small increments, move the thumbwheel toward SET/− briefly. Each time this is done, the vehicle goes about 1.6 km/h (1 mph) slower.

Passing Another Vehicle While Using Cruise Control

Use the accelerator pedal to increase the vehicle speed. When you take your foot off the pedal, the vehicle slows down to the previously set cruise control speed. While pressing the accelerator pedal or shortly following the release to override cruise control, briefly moving the thumbwheel toward SET/– will result in cruise control set to the current vehicle speed.

Using Cruise Control on Hills

How well the cruise control works on hills depends upon the vehicle speed, load, and the steepness of the hills. When going up steep hills, you might have to step on the accelerator pedal to maintain the vehicle speed. When going downhill, you might have to brake or shift to a lower gear to maintain the vehicle speed. When the brakes are applied, the cruise control is disengaged.

Ending Cruise Control

There are three ways to end cruise control:

- To disengage cruise control, step lightly on the brake pedal.
- Press .
- To turn off the cruise control, press .

Erasing Speed Memory

The cruise control set speed is erased from memory if is pressed or if the vehicle is turned off.

Fuel

Use of the recommended fuel is an important part of the proper maintenance of this vehicle. When driving in the U.S., to help keep the engine clean and maintain optimum vehicle performance, we recommend using TOP TIER Detergent Gasolines. See www.toptiergas.com for a list of TOP TIER Detergent Gasolines.

TOP TIER™ Detergent Gasoline

CATÉGORIE SUPERIÉURE™ Essences Détergentes

If the vehicle has a yellow fuel cap, E85 or FlexFuel can be used in the vehicle. See *E85 or FlexFuel on page 9-32*.

Recommended Fuel

For vehicles with a V6 engine, use regular unleaded gasoline with a posted octane rating of 87 or higher. If the octane rating is less than 87, an audible knocking noise may be heard. If this occurs, use a gasoline rated at 87 octane or higher as soon as possible. If heavy knocking is heard when using gasoline with a higher octane rating, the engine needs service.

For vehicles with a V8 engine, use premium unleaded gasoline with a posted octane rating of 91 or higher. Regular unleaded gasoline rated at 87 octane or higher can be used, but acceleration could be reduced, and an audible knocking noise may be heard. If the octane is less than 87, a heavy knocking noise may be heard. If this occurs, use a gasoline rated at 87 octane or higher as soon as possible. Otherwise, the engine could be damaged. If heavy knocking is heard when using gasoline with a higher octane rating, the engine needs service.

Use of Seasonal Fuels

Use summer and winter fuels in the appropriate season. Driving or starting could be affected if the incorrect fuel is used. Drive the vehicle with the engine running until the fuel is a half tank or less, then refuel with the current seasonal fuel.

Prohibited Fuels

Gasolines containing oxygenates, such as ethers and ethanol, as well as reformulated gasolines are available in some cities. If these gasolines comply with the previously described specification, then they are acceptable to use. However, E85 and other fuels containing more than 15% ethanol must be used only in FlexFuel vehicles.

⚠ Caution

Do not use fuel containing methanol. It can corrode metal parts in the fuel system and also damage plastic and rubber parts. That damage would not be covered under the vehicle warranty.

Some gasolines that are not reformulated for low emissions can contain an octane-enhancing additive called methylcyclopentadienyl manganese tricarbonyl (MMT). Do not use gasolines with MMT as they can reduce spark plug life and affect emission control system performance. The malfunction indicator lamp may turn on. If this occurs, see your dealer for service.

Gasoline Specifications

At a minimum, gasoline should meet ASTM specification D 4814. Some gasolines contain an octane-enhancing additive called methylcyclopentadienyl manganese tricarbonyl (MMT). We recommend against the use of gasolines containing MMT. See “Prohibited Fuels" in *Recommended Fuel on page 9-30*.

California Fuel Requirements

If the vehicle is certified to meet California Emissions Standards, it is designed to operate on fuels that meet California specifications. See the underhood emission control label. If this fuel is not available in states adopting California Emissions Standards, the vehicle will operate satisfactorily on fuels meeting federal specifications, but emission control system performance might be affected. The malfunction indicator lamp could turn on and the vehicle may not pass a smog-check test. See *Malfunction Indicator Lamp on page 5-10*. If this occurs, return to your authorized dealer for diagnosis. If it is determined that the condition is caused by the type of fuel used, repairs may not be covered by the vehicle warranty.

Fuels in Foreign Countries

If planning to drive in countries outside the U.S., the proper fuel might be hard to find. Check regional auto club or fuel retail brand websites for availability in the country where driving. Never use leaded gasoline, fuel containing methanol, or any other fuel not recommended. Costly repairs caused by use of improper fuel would not be covered by the vehicle warranty.

Fuel Additives

To keep fuel systems clean, TOP TIER Detergent Gasoline is recommended. See *Fuel on page 9-30*.

If TOP TIER Detergent Gasoline is not available, one bottle of Fuel System Treatment PLUS, part

number 88861013, added to the fuel tank at every engine oil change, can help. Fuel System Treatment PLUS is the only gasoline additive recommended by General Motors. It is available at your dealer.

Do not use additives with E85 or FlexFuel.

E85 or FlexFuel

Vehicles with a yellow fuel cap can use either unleaded gasoline or fuel containing up to 85% ethanol (E85). All other vehicles should use only the unleaded gasoline as described in *Recommended Fuel on page 9-30*.

The use of E85 or FlexFuel is encouraged when the vehicle is designed to use it. E85 or FlexFuel is made from renewable sources.

To help locate fuel stations that carry E85 or FlexFuel, the U.S. Department of Energy has an alternative fuels website. See www.afdc.energy.gov/afdc/locator/stations/.

E85 or FlexFuel should meet ASTM Specification D 5798 or CAN/CGSB-3.512 in Canada. Do not use the fuel if the ethanol content is greater than 85%. Fuel mixtures that do not meet ASTM or CGSB specifications can affect driveability and could cause the malfunction indicator lamp to come on.

If equipped with a V6 engine, the starting characteristics of E85 or FlexFuel make it unsuitable for use when temperatures fall below -18°C (0°F). Use gasoline or add gasoline to the E85 or FlexFuel.

After refueling, the vehicle determines the composition of the fuel. It is not recommended to repeatedly switch between gasoline and E85 or FlexFuel. If the fuels are switched frequently, add as much fuel as possible and do not add less than 11 L (3 gal) when refueling. Drive at least 11 km (7 mi) immediately after refueling to allow the vehicle to adapt to the change in ethanol concentration.

Because E85 has less energy per liter (gallon) than gasoline, the vehicle will need to be refueled more often. See *Filling the Tank on page 9-33*.

⚠ Caution

Some additives are not compatible with E85 or FlexFuel and can harm the vehicle's fuel system. Do not add anything to E85 or FlexFuel. Damage caused by additives would not be covered by the vehicle warranty.

⚠ Caution

Do not use fuel containing methanol. It can corrode metal parts in the fuel system and also damage plastic and rubber parts. That damage would not be covered under the vehicle warranty.

Filling the Tank

⚠ Warning

Fuel vapors and fuel fires burn violently and can cause injury or death.

- To help avoid injuries to you and others, read and follow all the instructions on the fuel pump island.
- Turn off the engine when refueling.
- Keep sparks, flames, and smoking materials away from fuel.
- Do not leave the fuel pump unattended.
- Do not reenter the vehicle while pumping fuel.
- Keep children away from the fuel pump and never let children pump fuel.

(Continued)

Warning (Continued)

- Fuel can spray out if the fuel cap is opened too quickly. This spray can happen if the tank is nearly full, and is more likely in hot weather. Open the fuel cap slowly and wait for any hiss noise to stop then unscrew the cap all the way

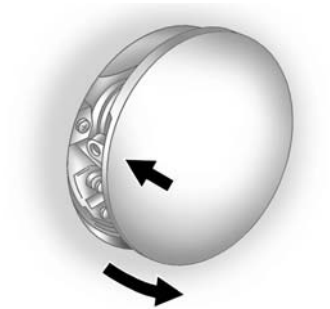

The fuel cap is behind a hinged fuel door on the passenger side of the vehicle. To open the fuel door, push and release the rearward center edge of the door.

When reinstalling the cap, turn it clockwise until it clicks, otherwise the malfunction indicator lamp may turn on. See *Malfunction Indicator Lamp on page 5-10*.

Be careful not to spill fuel. Do not top off or overfill the tank and wait a few seconds after you have finished pumping before removing the nozzle. Clean fuel from painted surfaces as soon as possible. See *Exterior Care on page 10-73*.

When replacing the fuel cap, turn it clockwise until it clicks. Make sure the cap is fully installed. The diagnostic system can determine if the fuel cap has been left off or improperly installed. This would allow fuel to evaporate into the atmosphere. See *Malfunction Indicator Lamp on page 5-10*.

⚠ Warning

If a fire starts while you are refueling, do not remove the nozzle. Shut off the flow of fuel by shutting off the pump or by notifying the station attendant. Leave the area immediately.

⚠ Caution

If a new fuel cap is needed, be sure to get the right type of cap from your dealer. The wrong type of fuel cap might not fit properly, might cause the malfunction indicator lamp to light, and could damage the fuel tank and emissions system. See *Malfunction Indicator Lamp on page 5-10*.

Filling a Portable Fuel Container

⚠ Warning

Filling a portable fuel container while it is in the vehicle can cause fuel vapors that can ignite either by static electricity or other means. You or others could be badly burned and the vehicle could be damaged. Always:

- Use approved fuel containers.
- Remove the container from the vehicle, trunk, or pickup bed before filling.
- Place the container on the ground.
- Place the nozzle inside the fill opening of the container before dispensing fuel, and

(Continued)

Warning (Continued)

keep it in contact with the fill opening until filling is complete.

- Fill the container no more than 95% full to allow for expansion.
- Do not smoke, light matches, or use lighters while pumping fuel.
- Avoid using cell phones or other electronic devices.

Towing

General Towing Information

The vehicle is neither designed nor intended to tow a trailer.

Conversions and Add-Ons

Add-On Electrical Equipment

⚠ Caution

Some electrical equipment can damage the vehicle or cause components to not work and would not be covered by the warranty. Always check with your dealer before adding electrical equipment.

Add-on equipment can drain the vehicle's 12-volt battery, even if the vehicle is not operating.

The vehicle has an airbag system. Before attempting to add anything electrical to the vehicle, see *Servicing the Airbag-Equipped Vehicle on page 3-34* and *Adding Equipment to the Airbag-Equipped Vehicle on page 3-34*.

✍ NOTES

Vehicle Care

General Information

General Information 10-2
California Proposition 65 Warning 10-2
California Perchlorate Materials Requirements 10-2
Accessories and Modifications 10-2

Vehicle Checks

Doing Your Own Service Work 10-3
Hood 10-4
Engine Compartment Overview 10-5
Engine Oil 10-8
Engine Oil Life System 10-11
Automatic Transmission Fluid 10-12
Engine Air Cleaner/Filter 10-12
Cooling System 10-13
Engine Coolant 10-14
Engine Overheating 10-18
Washer Fluid 10-20
Brakes 10-20
Brake Fluid 10-21
Battery 10-22
Rear Axle 10-23
Starter Switch Check 10-24
Automatic Transmission Shift Lock Control Function Check 10-24
Ignition Transmission Lock Check 10-25
Park Brake and P (Park) Mechanism Check 10-25
Wiper Blade Replacement 10-25

Headlamp Aiming

Headlamp Aiming 10-26

Bulb Replacement

Bulb Replacement 10-27
Halogen Bulbs 10-27
Headlamps, Front Turn Signal and Parking Lamps 10-27
Taillamps 10-29
License Plate Lamp 10-30
Replacement Bulbs 10-31

Electrical System

Electrical System Overload 10-31
Fuses 10-32
Engine Compartment Fuse Block 10-32
Instrument Panel Fuse Block 10-35
Rear Compartment Fuse Block 10-38

Wheels and Tires

Tires 10-40
All-Season Tires 10-41
Winter Tires 10-41
Low-Profile Tires 10-42
Tire Sidewall Labeling 10-42
Tire Designations 10-44
Tire Terminology and Definitions 10-45
Tire Pressure 10-48
Tire Pressure Monitor System 10-49
Tire Pressure Monitor Operation 10-50
Tire Inspection 10-53
Tire Rotation 10-54
When It Is Time for New Tires 10-55
Buying New Tires 10-56
Different Size Tires and Wheels 10-57

Uniform Tire Quality Grading 10-58
Wheel Alignment and Tire Balance 10-59
Wheel Replacement 10-59
Tire Chains 10-60
If a Tire Goes Flat 10-61
Tire Changing 10-62
Compact Spare Tire 10-67
Full-Size Spare Tire 10-68

Jump Starting
Jump Starting 10-69

Towing
Towing the Vehicle 10-72
Recreational Vehicle Towing 10-72

Appearance Care
Exterior Care 10-73
Interior Care 10-78
Floor Mats 10-81

General Information

For service and parts needs, visit your dealer. You will receive genuine GM parts and GM-trained and supported service people.

Genuine GM parts have one of these marks:

California Proposition 65 Warning

Most motor vehicles, including this one, contain and/or emit chemicals known to the State of California to cause cancer and birth defects or other reproductive harm. Engine exhaust, many parts and systems, many fluids, and some component wear by-products contain and/or emit these chemicals.

California Perchlorate Materials Requirements

Certain types of automotive applications, such as airbag initiators, safety belt pretensioners, and lithium batteries contained in Remote Keyless Entry transmitters, may contain perchlorate materials. Special handling may be necessary. For additional information, see www.dtsc.ca.gov/hazardouswaste/perchlorate.

Accessories and Modifications

Adding non-dealer accessories or making modifications to the vehicle can affect vehicle performance and safety, including such things as airbags, braking, stability, ride and

handling, emissions systems, aerodynamics, durability, and electronic systems like antilock brakes, traction control, and stability control. These accessories or modifications could even cause malfunction or damage not covered by the vehicle warranty.

Damage to vehicle components resulting from modifications or the installation or use of non-GM certified parts, including control module or software modifications, is not covered under the terms of the vehicle warranty and may affect remaining warranty coverage for affected parts.

GM Accessories are designed to complement and function with other systems on the vehicle. See your dealer to accessorize the vehicle using genuine GM Accessories installed by a dealer technician.

Also, see *Adding Equipment to the Airbag-Equipped Vehicle on page 3-34*.

Vehicle Checks

Doing Your Own Service Work

⚠ Warning

It can be dangerous to work on your vehicle if you do not have the proper knowledge, service manual, tools, or parts. Always follow owner manual procedures and consult the service manual for your vehicle before doing any service work.

If doing some of your own service work, use the proper service manual. It tells you much more about how to service the vehicle than this manual can. To order the proper service manual, see *Service Publications Ordering Information on page 13-9*.

This vehicle has an airbag system. Before attempting to do your own service work, see *Servicing the Airbag-Equipped Vehicle on page 3-34*.

Keep a record with all parts receipts and list the mileage and the date of any service work performed. See *Maintenance Records on page 11-11*.

⚠ Caution

Even small amounts of contamination can cause damage to vehicle systems. Do not allow contaminants to contact the fluids, reservoir caps, or dipsticks.

Hood

To open the hood:

1. Pull up on the hood release handle with this symbol on it. It is located below the instrument panel to the left of the steering column.

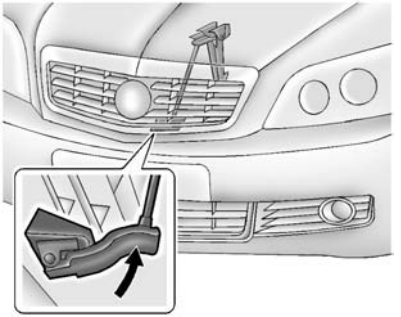

2. Push up on the secondary hood release and lift the hood.

To close the hood:

1. Before closing the hood, be sure all the filler caps are on properly.
2. Lower the hood 30 cm (12 in) above the vehicle and release it so it fully latches. Check to make sure the hood is closed and repeat the process if necessary.

Engine Compartment Overview

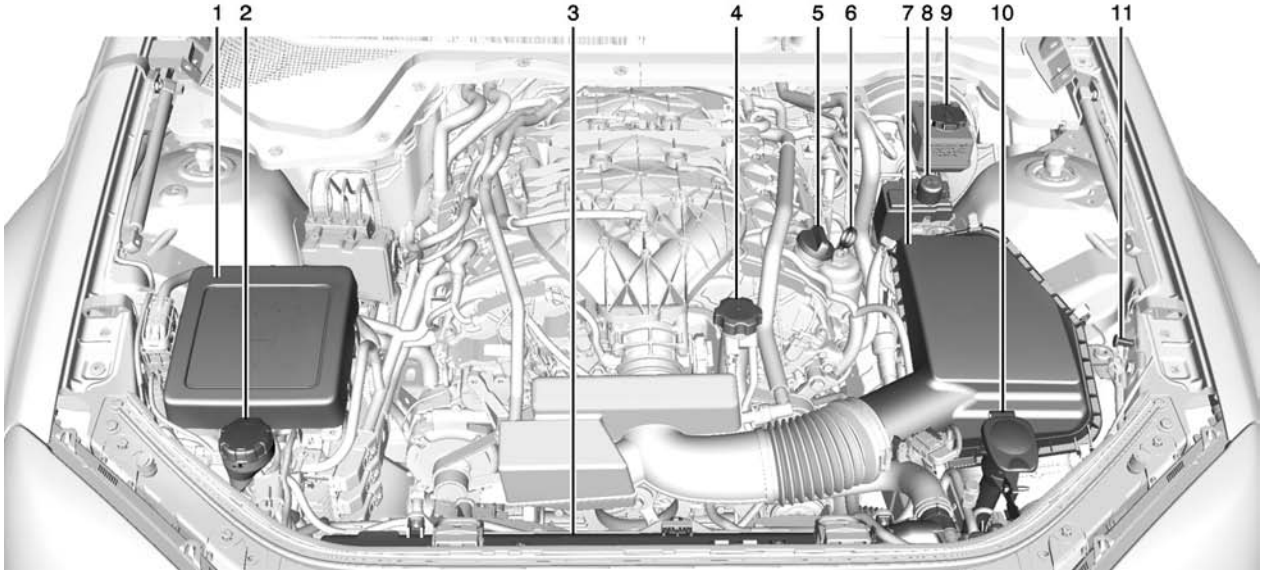

3.6L V6 Engine

1. *Engine Compartment Fuse Block on page 10-32*.
2. Coolant Recovery Reservoir and Dipstick Cap. See *Cooling System on page 10-13*.
3. Engine Cooling Fans (Out of View). See *Cooling System on page 10-13*.
4. Radiator Pressure Cap. See *Cooling System on page 10-13*.
5. Engine Oil Fill Cap. See *Engine Oil on page 10-8*.
6. Engine Oil Dipstick. See *Engine Oil on page 10-8*.
7. *Engine Air Cleaner/Filter on page 10-12*.
8. Remote Positive (+) Terminal. See *Jump Starting on page 10-69*.
9. Brake Master Cylinder Reservoir. See *Brakes on page 10-20*.
10. Windshield Washer Fluid Reservoir. See *Washer Fluid on page 10-20*.
11. Remote Negative (−) Terminal. See *Jump Starting on page 10-69*.

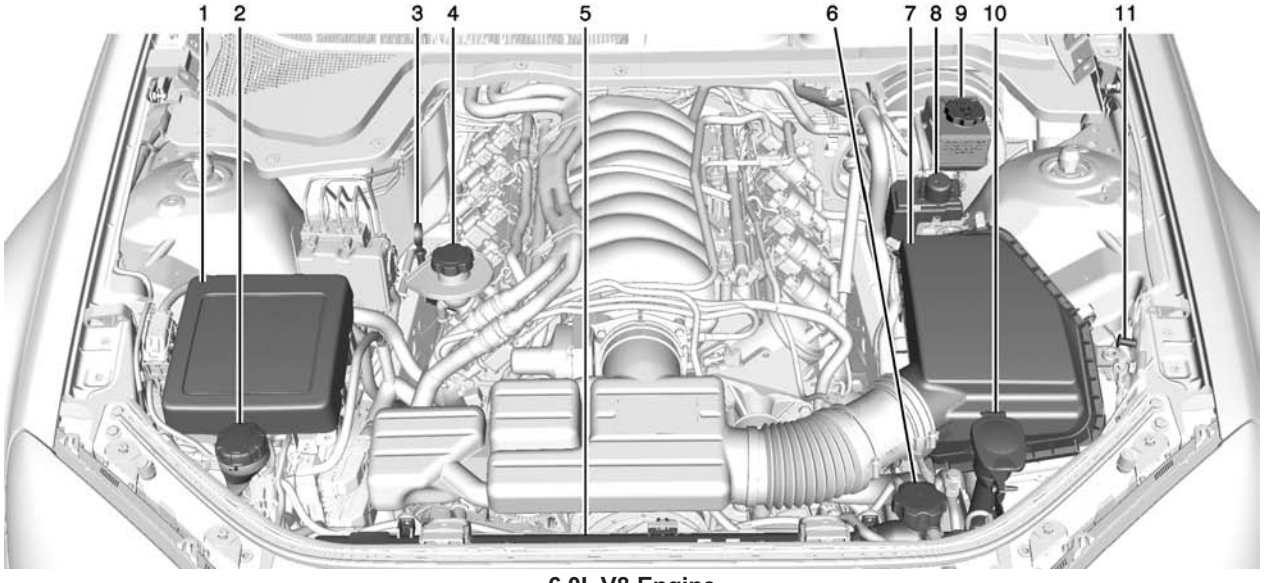

6.0L V8 Engine

1. *Engine Compartment Fuse Block on page 10-32*.
2. Coolant Recovery Reservoir and Dipstick Cap. See *Cooling System on page 10-13*.
3. Engine Oil Dipstick. See *Engine Oil on page 10-8*.
4. Engine Oil Fill Cap. See *Engine Oil on page 10-8*.
5. Engine Cooling Fans (Out of View). See *Cooling System on page 10-13*.
6. Radiator Pressure Cap. See *Cooling System on page 10-13*.
7. *Engine Air Cleaner/Filter on page 10-12*.
8. Remote Positive (+) Terminal. See *Jump Starting on page 10-69*.
9. Brake Master Cylinder Reservoir. See *Brakes on page 10-20*.
10. Windshield Washer Fluid Reservoir. See *Washer Fluid on page 10-20*.
11. Remote Negative (−) Terminal. See *Jump Starting on page 10-69*.

Engine Oil

To ensure proper engine performance and long life, careful attention must be paid to engine oil. Following these simple, but important steps will help protect your investment:

- Always use engine oil approved to the proper specification and of the proper viscosity grade. See “Selecting the Right Engine Oil” in this section.
- Check the engine oil level regularly and maintain the proper oil level. See “Checking Engine Oil” and “When to Add Engine Oil” in this section.
- Change the engine oil at the appropriate time. See *Engine Oil Life System on page 10-11*.
- Always dispose of engine oil properly. See “What to Do with Used Oil” in this section.

Checking Engine Oil

It is a good idea to check the engine oil level at each fuel fill. In order to get an accurate reading, the vehicle must be on level ground. The engine oil dipstick handle is a loop. See *Engine Compartment Overview on page 10-5* for the location of the engine oil dipstick.

Obtaining an accurate oil level reading is essential:

1. If the engine has been running recently, turn off the engine and allow several minutes for the oil to drain back into the oil pan. Checking the oil level too soon after engine shutoff will not provide an accurate oil level reading.

⚠ Warning

The engine oil dipstick handle may be hot; it could burn you. Use a towel or glove to touch the dipstick handle.

2. Pull out the dipstick and clean it with a paper towel or cloth, then push it back in all the way. Remove it again, keeping the tip down, and check the level.

When to Add Engine Oil

V6 Engine

V8 Engine

If the oil is in the cross-hatched add area at the tip of the dipstick for the V6 engine or at the lower mark at the tip of the dipstick for the V8 engine, add 1 L (1 qt) of the recommended oil and then recheck the level. See “Selecting the Right Engine Oil” in this section for an explanation of what kind of oil to use. For engine oil crankcase capacity, see *Capacities and Specifications on page 12-2*

⚠ Caution

Do not add too much oil. Oil levels above or below the acceptable operating range shown on the dipstick are harmful to the engine. If you find that you have an oil level above the operating range, the engine could be damaged. You should drain out the excess oil or limit driving of the vehicle and seek a service professional to remove the excess amount of oil.

See *Engine Compartment Overview on page 10-5*

Add enough oil to reach the upper cross-hatched area for the V6 engine or at the upper mark on the dipstick for the V8 engine. Push the dipstick all the way back in when through.

Selecting the Right Engine Oil

Selecting the right engine oil depends on both the proper oil specification and viscosity grade. See *Recommended Fluids and Lubricants on page 11-9*.

Specification

Use and ask for licensed engine oils with the dexos1® approved certification mark. Engine oils meeting the requirements for the vehicle should have the dexos1 approved certification mark. This certification mark indicates that the oil has been approved to the dexos1 specification.

⚠ Caution

Failure to use the recommended engine oil can result in engine damage not covered by the vehicle warranty. Check with your dealer or service provider on whether the oil is approved to the dexos1 specification.

Viscosity Grade

SAE 5W-30 is the best viscosity grade for the vehicle. Do not use other viscosity grade oils such as SAE 10W-30, 10W-40, or 20W-50.

Cold Temperature Operation: In an area of extreme cold, where the temperature falls below −29°C (−20°F), an SAE 0W-30 oil may be used. An oil of this viscosity grade will provide easier cold starting for the engine at extremely low temperatures. When selecting an oil of the appropriate viscosity grade, always select an oil of the correct specification. See “Specification” earlier in this section for more information.

Engine Oil Additives/Engine Oil Flushes

Do not add anything to the oil. The recommended oils with the dexos specification and displaying the dexos certification mark are all that is needed for good performance and engine protection.

Engine oil system flushes are not recommended and could cause engine damage not covered by the vehicle warranty.

What to Do with Used Oil

Used engine oil contains certain elements that can be unhealthy for your skin and could even cause cancer. Do not let used oil stay on your skin for very long. Clean your skin and nails with soap and water, or a good hand cleaner. Wash or properly dispose of clothing or rags

containing used engine oil. See the manufacturer's warnings about the use and disposal of oil products.

Used oil can be a threat to the environment. If you change your own oil, be sure to drain all the oil from the filter before disposal. Never dispose of oil by putting it in the trash or pouring it on the ground, into sewers, or into streams or bodies of water. Recycle it by taking it to a place that collects used oil.

Engine Oil Life System

When to Change Engine Oil

This vehicle has a computer system that indicates when to change the engine oil and filter. This is based on a combination of factors which include engine revolutions, engine temperature, and miles driven. Based on driving conditions, the mileage at which an oil change is indicated can vary considerably. For the oil life system to work properly, the system must be reset every time the oil is changed.

When the system has calculated that oil life has been diminished, it indicates that an oil change is necessary. A CHANGE ENGINE OIL SOON message comes on. See *Engine Oil Messages on page 5-23*. Change the oil as soon as possible within the next 1 000 km (600 mi). It is possible that, if driving under the best conditions, the oil life system might indicate that an oil change is not necessary for up to a year. The engine oil and filter must be changed at least once a year and, at this time, the system must be reset. Your dealer has trained service people who will perform this work and reset the system. It is also important to check the oil regularly over the course of an oil drain interval and keep it at the proper level.

If the system is ever reset accidentally, the oil must be changed at 5 000 km (3,000 mi) since the last oil change. Remember to reset the oil life system whenever the oil is changed.

How to Reset the Engine Oil Life System

Reset the system whenever the engine oil is changed so that the system can calculate the next engine oil change. To reset the system:

1. Display the REMAINING OIL LIFE on the DIC. See *Driver Information Center (DIC) on page 5-18*.
2. Press and hold the SET/CLR button on the DIC while the Oil Life display is active. The oil life will change to 100%.

The oil life system can also be reset as follows:

1. Turn the ignition to ON/RUN with the engine off.
2. Fully press and release the accelerator pedal three times within five seconds.

The system is reset when the CHANGE ENGINE OIL SOON message goes off.

If the CHANGE ENGINE OIL SOON message comes back on when the vehicle is started, the engine oil life system has not been reset. Repeat the procedure.

Automatic Transmission Fluid

How to Check Automatic Transmission Fluid

It is not necessary to check the transmission fluid level.
A transmission fluid leak is the only reason for fluid loss. If a leak occurs, take the vehicle to your dealer service department and have it repaired as soon as possible.

There is a special procedure for checking and changing the transmission fluid. Because this procedure is difficult, you should have this done at your dealer service department. Contact your dealer for additional information or the procedure can be found in the service manual. To purchase a service manual, see *Service Publications Ordering Information on page 13-9*.

Change the fluid and filter at the intervals listed in *Maintenance Schedule on page 11-2*, and be sure to use the fluid listed in *Recommended Fluids and Lubricants on page 11-9*.

Engine Air Cleaner/Filter

See *Engine Compartment Overview on page 10-5* for the location of the engine air cleaner/filter.

When to Inspect the Engine Air Cleaner/Filter

Inspect the air cleaner/filter at the scheduled maintenance intervals and replace it when required. See *Maintenance Schedule on page 11-2* for more information.
If driving in dusty/dirty conditions, inspect the filter at each engine oil change.

How to Inspect the Engine Air Cleaner/Filter

To inspect the air cleaner/filter, remove the filter from the vehicle and lightly shake the filter to release loose dust and dirt. If the filter remains covered with dirt, a new filter is required. Never use compressed air to clean the filter.

To inspect or replace the engine air cleaner/filter:

1. Open the hood. See *Hood on page 10-4*.
2. Locate the air filter housing on the front of the driver side of the engine compartment. See *Engine Compartment Overview on page 10-5*.

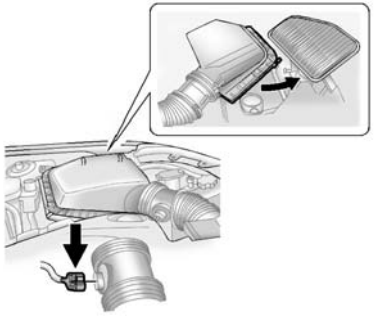

6.0L V8 Engine Shown, 3.6L V6 Engine Similar

3. Remove the airflow sensor connector by pushing in the tab and pulling straight back.
4. Open the five retaining clips on the air filter housing.
5. Pull straight up on the cover; while holding the cover, remove the air filter.
6. Install the air filter.
7. Close the air filter housing cover and clip the five retaining clips.
8. Push in the airflow sensor connector.

⚠ Warning

Operating the engine with the air cleaner/filter off can cause you or others to be burned. The air cleaner not only cleans the air; it helps to stop flames if the engine backfires. Use caution when working on the engine and do not drive with the air cleaner/filter off.

⚠ Caution

If the air cleaner/filter is off, dirt can easily get into the engine, which could damage it. Always have the air cleaner/filter in place when you are driving.

Cooling System

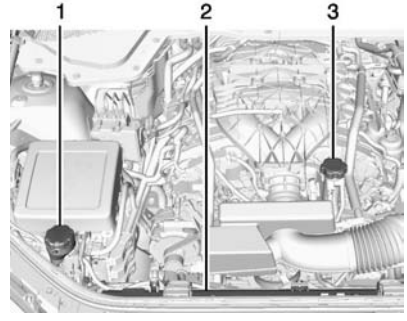

3.6L V6 Engine

1. Coolant Recovery Reservoir
2. Engine Cooling Fans (Out of View)
3. Radiator Cap

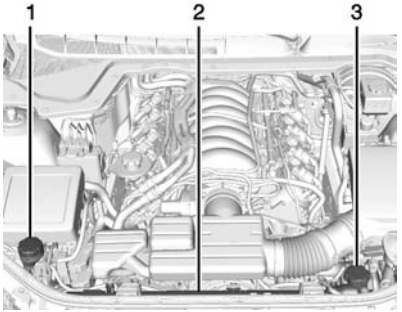

6.0L V8 Engine

1. Coolant Recovery Reservoir
2. Engine Cooling Fans (Out of View)
3. Radiator Cap

⚠ Warning

An electric engine cooling fan under the hood can start up even when the engine is not running and can cause injury. Keep hands, clothing, and tools away from any underhood electric fan.

⚠ Warning

Heater and radiator hoses, and other engine parts, can be very hot. Do not touch them. If you do, you can be burned.

Do not run the engine if there is a leak. If you run the engine, it could lose all coolant. That could cause an engine fire, and you could be burned. Get any leak fixed before you drive the vehicle.

⚠ Caution

Using coolant other than DEX-COOL® can cause premature engine, heater core, or radiator corrosion. In addition, the engine coolant could require changing sooner. Any repairs would not be covered by the

(Continued)

Caution (Continued)

vehicle warranty. Always use DEX-COOL (silicate-free) coolant in the vehicle.

Engine Coolant

The cooling system in the vehicle is filled with DEX-COOL® engine coolant. This coolant is designed to remain in the vehicle for 5 years or 240 000 km (150,000 mi), whichever occurs first.

The following explains the cooling system and how to check and add coolant when it is low. If there is a problem with engine overheating, see *Engine Overheating on page 10-18*.

What to Use

⚠ Warning

Adding only plain water or some other liquid to the cooling system can be dangerous. Plain water and other liquids, can boil before the proper coolant mixture will. The coolant warning system is set for the proper coolant mixture. With plain water or the wrong mixture, the engine could get too hot but you would not get the overheat warning. The engine could catch fire and you or others could be burned. Use a 50/50 mixture of clean, drinkable water and DEX-COOL coolant.

Use a 50/50 mixture of clean, drinkable water and DEX-COOL coolant. If using this mixture, nothing else needs to be added. This mixture:

- Gives freezing protection down to −37°C (−34°F), outside temperature.
- Gives boiling protection up to 129°C (265°F), engine temperature.
- Protects against rust and corrosion.
- Will not damage aluminum parts.
- Helps keep the proper engine temperature.

⚠ Caution

If improper coolant mixture, inhibitors, or additives are used in the vehicle cooling system, the engine could overheat and be damaged. Too much water in the

(Continued)

Caution (Continued)

mixture can freeze and crack engine cooling parts. The repairs would not be covered by the vehicle warranty. Use only the proper mixture of engine coolant for the cooling system. See *Recommended Fluids and Lubricants on page 11-9*.

Never dispose of engine coolant by putting it in the trash, pouring it on the ground, or pouring it into sewers, streams or bodies of water. Have the coolant changed by an authorized service center, familiar with legal requirements regarding used coolant disposal. This will help protect the environment and your health.

Checking Coolant

The vehicle must be on a level surface when checking the coolant level.

To check coolant:

1. Turn the ignition off.
2. Locate the coolant recovery reservoir. See *Engine Compartment Overview on page 10-5*.

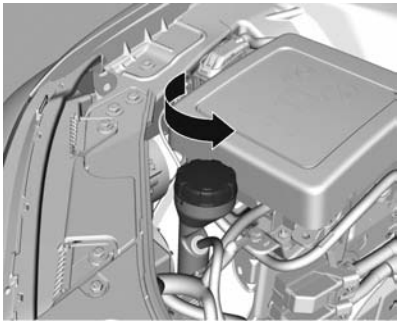

3. Turn the coolant recovery reservoir dipstick cap counterclockwise and slowly pull out the dipstick. There are maximum and minimum markings on the dipstick.

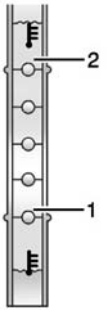

4. When the engine is cold, the coolant level should be at or above the minimum mark (1). After the vehicle has been driven and the engine is at normal operating temperature, the level should be somewhere between half full and the maximum mark (2).
5. If the coolant level is correct, replace the coolant recovery reservoir dipstick cap and turn clockwise to secure.

How to Add Coolant to the Coolant Recovery Bottle

⚠ Warning

You can be burned if you spill coolant on hot engine parts. Coolant contains ethylene glycol and it will burn if the engine parts are hot enough. Do not spill coolant on a hot engine.

⚠ Caution

This vehicle has a specific coolant fill procedure. Failure to follow this procedure could cause the engine to overheat and be severely damaged.

To add coolant:

1. Turn the engine coolant recovery reservoir dipstick cap counterclockwise 1/8 of a turn and slowly pull out the dipstick.
2. Pour the coolant into the engine coolant recovery reservoir.
3. When the level is correct, as per the markings on the dipstick, replace the coolant recovery reservoir dipstick cap and turn clockwise to secure.

How to Add Coolant to the Radiator

⚠ Warning

You can be burned if you spill coolant on hot engine parts. Coolant contains ethylene glycol and it will burn if the engine parts are hot enough. Do not spill coolant on a hot engine.

⚠ Caution

This vehicle has a specific coolant fill procedure. Failure to follow this procedure could cause the engine to overheat and be severely damaged.

⚠ Warning

An electric engine cooling fan under the hood can start up even when the engine is not running and can cause injury. Keep hands, clothing, and tools away from any underhood electric fan.

⚠ Warning

Steam and scalding liquids from a hot cooling system can blow out and burn you badly. They are

(Continued)

Warning (Continued)

under pressure, and if you turn the radiator cap — even a little — they can come out at high speed. Never turn the cap when the cooling system, including the radiator cap, is hot. Wait for the cooling system and radiator cap to cool if you ever have to turn the pressure cap.

If no coolant is visible in the engine coolant recovery reservoir, add coolant as follows:

1. Locate the radiator cap. See *Engine Compartment Overview on page 10-5*.

2. Cover the radiator cap with a thick cloth and turn it slowly counterclockwise and remove.
3. If there is no coolant visible or the level is low, slowly fill the system through the radiator cap opening with a 50/50 mixture of clean, drinkable water and DEX-COOL coolant until full.

   Wait 30 seconds for the coolant to settle and top off if the level drops.

   Do not spill coolant on the accessory drive belts.

   If a spill occurs, rinse the belt with fresh water.
4. Start the engine.
5. With the engine idling, top off the coolant through the radiator cap opening until full.

   Wait 30 seconds for the coolant to settle and top off if the level drops.
6. Once the system is full, put the radiator cap back on by turning clockwise.
7. Turn the engine off.

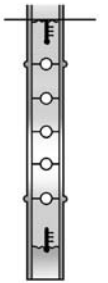

8. Check the coolant level in the engine coolant recovery reservoir and fill it until the level is at the top mark on the dipstick cap. Filling to this level provides additional coolant to allow for any air that may be left in the cooling system.

⚠ Caution

If the pressure cap is not tightly installed, coolant loss and possible engine damage may occur. Be sure the cap is properly and tightly secured.

Engine Overheating

The vehicle has an indicator to warn of engine overheating.

You may decide not to lift the hood when this warning appears, but instead get service help right away. See *Roadside Assistance Program on page 13-4*.

If you do decide to lift the hood, make sure the vehicle is parked on a level surface.

Then check to see if the engine cooling fans are running. If the engine is overheating, both fans should be running. If they are not, do not continue to run the engine and have the vehicle serviced.

⚠ Caution

Running the engine without coolant may cause damage or a fire. Vehicle damage would not be covered by the vehicle warranty.

If Steam is Coming from the Engine Compartment

⚠ Warning

Steam from an overheated engine can burn you badly, even if you just open the hood. Stay away from the engine if you see or hear steam coming from it. Just turn it off and get everyone away from the vehicle until it cools down. Wait until there is no sign of steam or coolant before you open the hood.

(Continued)

Warning (Continued)

If you keep driving when the engine is overheated, the liquids in it can catch fire. You or others could be badly burned. Stop the engine if it overheats, and get out of the vehicle until the engine is cool.

If No Steam is Coming from the Engine Compartment

If an engine overheat warning is displayed but no steam can be seen or heard, the problem may not be too serious. Sometimes the engine can get a little too hot when the vehicle:

- Climbs a long hill on a hot day.
- Stops after high-speed driving.
- Idles for long periods in traffic.

If the overheat warning is displayed with no sign of steam:

1. Turn the air conditioning off.
2. Turn the heater on to the highest temperature and to the highest fan speed. Open the windows as necessary.
3. When it is safe to do so, pull off the road, shift to P (Park) or N (Neutral), and let the engine idle.

If the overheat warning no longer displays, the vehicle can be driven. Continue to drive the vehicle slowly for about 10 minutes. Keep a safe vehicle distance from the vehicle in front. If the warning does not come back on, continue to drive normally and have the cooling system checked for proper fill and function.

If the warning continues, pull over, stop, and park the vehicle right away.

If there is no sign of steam, idle the engine for three minutes while parked. If the warning is still displayed, turn off the engine until it cools down.

Washer Fluid

What to Use

When windshield washer fluid is needed, be sure to read the manufacturer's instructions before use. If operating the vehicle in an area where the temperature may fall below freezing, use a fluid that has sufficient protection against freezing.

Adding Washer Fluid

Open the cap with the washer symbol on it. Add washer fluid until the windshield washer fluid reservoir is full. See *Engine Compartment Overview on page 10-5* for reservoir location.

⚠ Caution

- Do not use engine coolant (antifreeze) in the windshield washer. It can damage the windshield washer system and paint.
- Do not mix water with ready-to-use washer fluid. Water can cause the solution to freeze and damage the washer fluid tank and other parts of the washer system.
- When using concentrated washer fluid, follow the manufacturer instructions for adding water.
- Fill the washer fluid tank only three-quarters full when it is very cold. This allows for fluid expansion if freezing occurs, which could damage the tank if it is completely full.

Brakes

This vehicle has disc brakes. Disc brake pads have built-in wear indicators that make a high-pitched warning sound when the brake pads are worn and new pads are needed. The sound can come and go or be heard all the time when the vehicle is moving, except when applying the brake pedal firmly.

⚠ Warning

The brake wear warning sound means that soon the brakes will not work well. That could lead to a crash. When the brake wear warning sound is heard, have the vehicle serviced.

⚠ Caution

Continuing to drive with worn-out brake pads could result in costly brake repair.

Some driving conditions or climates can cause a brake squeal when the brakes are first applied or lightly applied. This does not mean something is wrong with the brakes.

Properly torqued wheel nuts are necessary to help prevent brake pulsation. When tires are rotated, inspect brake pads for wear and evenly tighten wheel nuts in the proper sequence to torque specifications. See *Capacities and Specifications on page 12-2*.

Brake pads should be replaced as complete sets.

Brake Pedal Travel

See your dealer if the brake pedal does not return to normal height, or if there is a rapid increase in pedal travel. This could be a sign that brake service might be required.

Brake Adjustment

Every time the brakes are applied, with or without the vehicle moving, the brakes adjust for wear.

Replacing Brake System Parts

The braking system on a vehicle is complex. Its many parts have to be of top quality and work well together if the vehicle is to have really good braking. The vehicle was designed and tested with top-quality brake parts. When parts of the braking system are replaced, be sure to get new, approved replacement parts. If this is not done, the brakes might not work properly. For example, installing disc brake pads that are wrong for the vehicle, can change the balance between the front and rear brakes — for the worse. The braking performance expected can change in many other ways if the wrong replacement brake parts are installed.

Brake Fluid

The brake master cylinder reservoir is filled with DOT 4 brake fluid.

There are only two reasons why the brake fluid level in the reservoir might go down:

- The brake fluid level goes down because of normal brake lining wear. When new linings are installed, the fluid level goes back up.
- A fluid leak in the brake hydraulic system can also cause a low fluid level. Have the brake hydraulic system fixed, since a leak means that sooner or later the brakes will not work well.

Do not top off the brake fluid. Adding fluid does not correct a leak. If fluid is added when the linings are worn, there will be too much fluid when new brake linings are installed. Add or remove brake fluid, as necessary, only when work is done on the brake hydraulic system.

⚠ Warning

If too much brake fluid is added, it can spill on the engine and burn, if the engine is hot enough. You or others could be burned, and the vehicle could be damaged. Add brake fluid only when work is done on the brake hydraulic system.

When the brake fluid falls to a low level, the brake warning light comes on. See *Brake System Warning Light on page 5-13*.

What to Add

Use only new DOT 4 brake fluid from a sealed container. It is recommended that the brake hydraulic system be flushed and refilled with new DOT 4 fluid at a regular maintenance service every two years. See *Maintenance Schedule on page 11-2* and *Recommended Fluids and Lubricants on page 11-9*.

Always clean the brake fluid reservoir cap and the area around the cap before removing it. This helps keep dirt from entering the reservoir.

⚠ Warning

With the wrong kind of fluid in the brake hydraulic system, the brakes might not work well. This could cause a crash. Always use the proper brake fluid.

⚠ Caution

- Using the wrong fluid can badly damage brake hydraulic system parts. For example, just a few drops of mineral-based oil, such as engine oil, in the brake hydraulic system can damage brake hydraulic system parts so badly that they will have to be replaced. Do not let someone put in the wrong kind of fluid.
- If brake fluid is spilled on the vehicle's painted surfaces, the paint finish can be damaged. Be careful not to spill brake fluid on the vehicle. If you do, wash it off immediately.

Battery

The battery is in the trunk, behind a trim panel, on the driver side of the vehicle. If the vehicle has the

auxiliary battery option K5S, the auxiliary battery is in the trunk, behind a trim panel on the passenger side of the vehicle. Refer to the replacement number shown on the original battery label when a new battery is needed.

⚠ Warning

A specifically developed battery with a ventilation system is required for this vehicle. Any other standard battery may cause explosive gases to enter the trunk or passenger compartment.

Do not remove the caps on the top of the battery. The battery supplied in the vehicle is maintenance free and does not require checking or filling.

The battery vent tube must be installed correctly to ensure the explosive gases are vented outside the vehicle.

(Continued)

Warning (Continued)

Only use a manufacturer recommended battery as a replacement.

⚠ Warning

Battery posts, terminals, and related accessories contain lead and lead compounds, chemicals known to the State of California to cause cancer and reproductive harm. Wash hands after handling.

Vehicle Storage

⚠ Warning

Batteries have acid that can burn you and gas that can explode. You can be badly hurt if you are not careful. See *Jump Starting on*

(Continued)

Warning (Continued)

page 10-69 for tips on working around a battery without getting hurt.

Infrequent Usage: Remove the black, negative (−) cable from the battery to keep the battery from running down.

Extended Storage: Remove the black, negative (−) cable from the battery or use a battery trickle charger.

Rear Axle

When to Check Lubricant

It is not necessary to regularly check rear axle fluid unless you suspect there is a leak or you hear an unusual noise. A fluid loss could indicate a problem. Have it inspected and repaired.

How to Check Lubricant

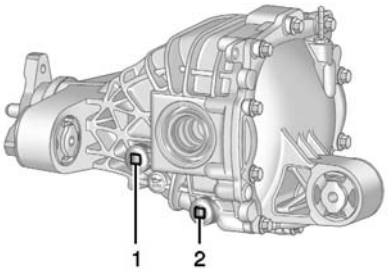

1. Fill Plug Hole
2. Drain Plug Hole

To get an accurate reading, the vehicle should be on a level surface.

If the level is below the bottom of the filler plug hole, add some lubricant. Add enough lubricant to raise the level to the bottom of the filler plug hole.

What to Use

To add lubricant when the level is low or to completely refill after draining, see *Recommended Fluids and Lubricants on page 11-9*. Then fill to the bottom of the fill plug hole with the required lubricant.

Starter Switch Check

⚠ Warning

When you are doing this inspection, the vehicle could move suddenly. If the vehicle moves, you or others could be injured.

1. Before starting this check, be sure there is enough room around the vehicle.
2. Apply both the parking brake and the regular brake.

   Do not use the accelerator pedal, and be ready to turn off the engine immediately if it starts.
3. Try to start the engine in each gear. The vehicle should start only in P (Park) or N (Neutral). If the vehicle starts in any other position, contact your dealer for service.

Automatic Transmission Shift Lock Control Function Check

⚠ Warning

When you are doing this inspection, the vehicle could move suddenly. If the vehicle moves, you or others could be injured.

1. Before starting this check, be sure there is enough room around the vehicle. It should be parked on a level surface.
2. Apply the parking brake. Be ready to apply the regular brake immediately if the vehicle begins to move.
3. With the engine off, turn the ignition on, but do not start the engine. Without applying the regular brake, try to move the shift lever out of P (Park) with normal effort. If the shift lever moves out of P (Park), contact your dealer for service.

Ignition Transmission Lock Check

If equipped with a key type ignition, while parked and with the parking brake set, try to turn the ignition to LOCK/OFF in each shift lever position.

- The ignition should turn to LOCK/OFF only when the shift lever is in P (Park).
- The ignition key should come out only in LOCK/OFF.

Contact your dealer if service is required.

Park Brake and P (Park) Mechanism Check

⚠ Warning

When you are doing this check, the vehicle could begin to move. You or others could be injured and property could be damaged. Make sure there is room in front of the vehicle in case it begins to roll. Be ready to apply the regular brake at once should the vehicle begin to move.

Park on a fairly steep hill, with the vehicle facing downhill. Keeping your foot on the regular brake, set the parking brake.

- To check the parking brake's holding ability: With the engine running and the transmission in N (Neutral), slowly remove foot pressure from the regular brake pedal. Do this until the vehicle is held by the parking brake only.
- To check the P (Park) mechanism's holding ability: With the engine running, shift to P (Park). Then release the parking brake followed by the regular brake.

Contact your dealer if service is required.

Wiper Blade Replacement

Windshield wiper blades should be inspected for wear or cracking. See *Maintenance Schedule on page 11-2*.

Replacement blades come in different types and are removed in different ways. For the proper type and size, see *Maintenance Replacement Parts on page 11-10*.

To replace the wiper blade assembly:

1. Pull the windshield wiper assembly away from the windshield.

2. Squeeze the tabs on each side of the wiper blade assembly and slide the assembly off the end of the wiper arm.

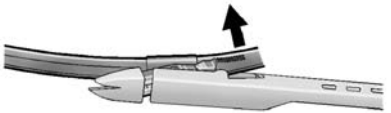

3. Install the new blade onto the arm connector and make sure the tabs are fully set in the locked position.

   Allowing the wiper blade arm to touch the windshield when no wiper blade is installed could damage the windshield. Any damage that occurs would not be covered by your warranty. Do not allow the wiper blade arm to touch the windshield.

4. Repeat the steps for the other blade.

Headlamp Aiming

Headlamp aim has been preset and should need no further adjustment.

If the vehicle is damaged in a crash, the headlamp aim may be affected. If adjustment to the headlamps is necessary, see your dealer.

Bulb Replacement

For the proper type of replacement bulbs, see *Replacement Bulbs on page 10-31*.

For any bulb changing procedure not listed in this section, contact your dealer.

Halogen Bulbs

⚠ Warning

Halogen bulbs have pressurized gas inside and can burst if you drop or scratch the bulb. You or others could be injured. Be sure to read and follow the instructions on the bulb package.

Headlamps, Front Turn Signal and Parking Lamps

Headlamps

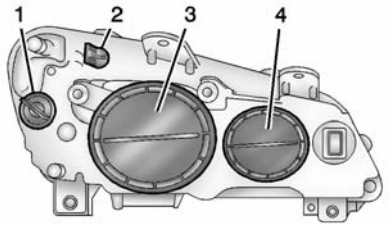

1. Front Turn Signal Lamp
2. Parking Lamp
3. Low-Beam Headlamp
4. High-Beam Headlamp

To replace one of these bulbs:

1. Open the hood. See *Hood on page 10-4*.

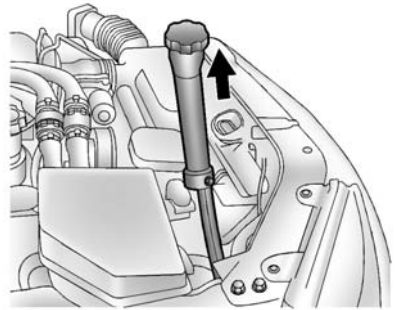

2. For the passenger side, pull up on the coolant recovery reservoir filler neck to remove it.

   Let the filler neck drain before pulling it all the way out. Place a clean towel over the opening of the coolant recovery reservoir after removing it.

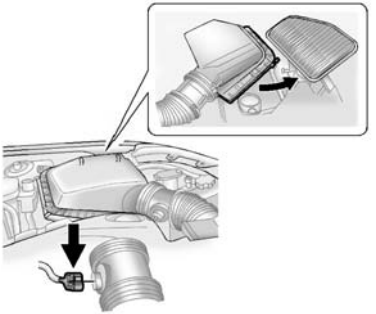

3. For the driver side, remove the air cleaner/filter cover. Move the cover to the back.

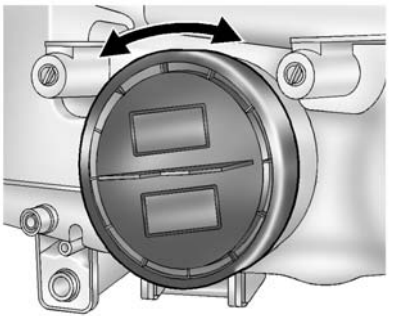

4. Turn the dust cap counterclockwise to remove.

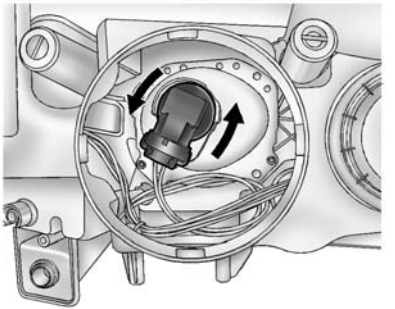

5. Turn the bulb counterclockwise and pull it out to remove it from the lamp assembly.
6. Disconnect the wiring harness connector.
7. Install the new bulb into the lamp assembly.
8. Reconnect the wiring harness connector to the bulb.
9. Replace the dust cap.
10. For the driver side, reinstall the air cleaner/filter cover.
11. For the passenger side, reinstall the coolant recovery reservoir filler neck.

Front Turn Signal Lamp

1. Open the hood. See *Hood on page 10-4*.

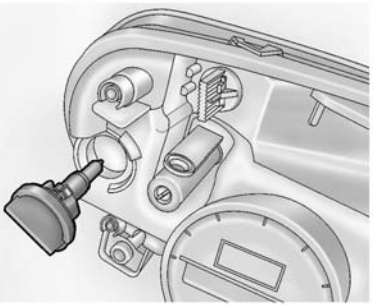

2. Turn the bulb socket counterclockwise and pull it straight out.
3. Push and turn the bulb counterclockwise and remove.

4. Push the new bulb in and turn it clockwise to lock it into place.
5. Push the bulb socket and turn it clockwise to lock it into place.

Parking Lamp

1. Open the hood. See *Hood on page 10-4*.

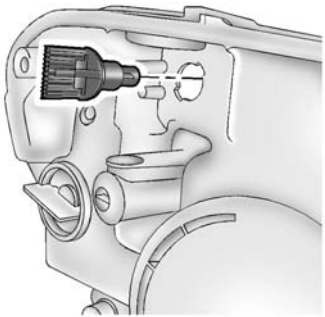

2. Turn the bulb socket counterclockwise and pull it straight out.
3. Pull the bulb straight out of the socket.
4. Push the new bulb into the socket.
5. Push the bulb socket and turn it clockwise to lock it into place.

Taillamps

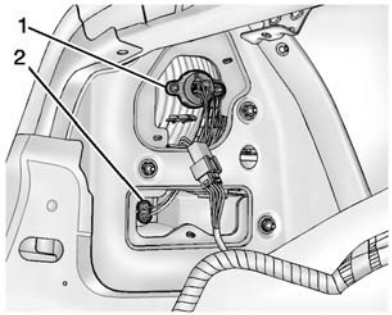

1. Stoplamp/Taillamp/Turn Signal
2. Back-up Lamp

For any lamp not listed here, see your dealer to replace.

To replace one of these bulbs:

1. Open the trunk. See *Trunk on page 2-9*.
2. Remove the rubber trunk floor mat.
3. Raise the spare tire cover. See *Tire Changing on page 10-62*.

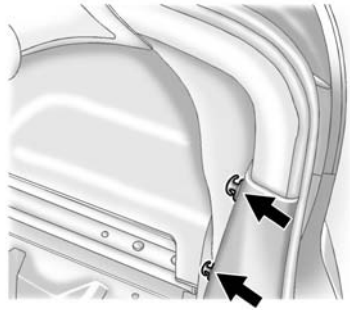

4. Remove the lower push pins and turn the upper hooks securing the plastic trunk trim counterclockwise to remove.
5. Pull the trunk trim straight up to remove.

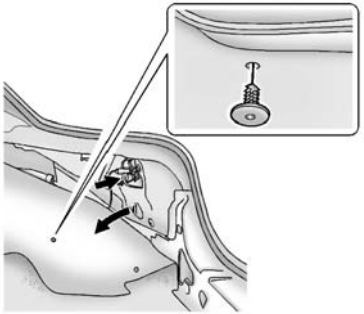

6. Remove the trunk lining by turning the securing pins counterclockwise and pulling down at the same time.
7. Lower the spare tire cover.
8. Turn the bulb socket counterclockwise to remove it from the rear lamp housing.
9. Pull the bulb straight out to remove it from the bulb socket.
10. Push the new bulb into the socket.
11. Push the bulb socket straight in and turn it clockwise to lock it into place.
12. Raise the spare tire cover.
13. Push the trunk lining securing pins back into their holes.
14. Install the plastic trunk trim to its original location.
15. Reinstall the plastic retaining pins and hooks.

License Plate Lamp

To replace one of these bulbs:

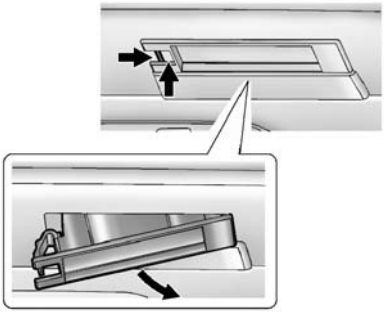

Passenger Side Shown, Driver Side Similar

1. Press the spring clip on the left end of the lamp assembly to the right to unlock the lamp assembly.
2. Pull down on the lamp assembly to remove it from the fascia.

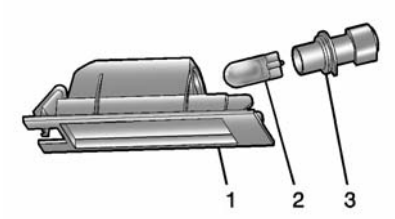

3. Turn the bulb socket (3) counterclockwise to remove it from the lamp assembly (1).
4. Pull the bulb (2) straight out of the bulb socket (3).
5. Push the replacement bulb straight into the bulb socket (3) and turn the bulb socket clockwise to install into the lamp assembly (1).
6. Reinstall the lamp assembly (1) into the fascia by inserting the right side first.
7. Push the spring clip side into place.

Replacement Bulbs

Exterior Lamp	Bulb Number
Back-Up Lamp	W16W
Front Parking Lamp	W5WLL
Front Turn Signal Lamp	H21W
High-Beam Headlamp	H7
License Plate Lamp	W5WLL
Low-Beam Headlamp	H11
Stop/Turn/Taillamp	W21/5W LL

For replacement bulbs not listed here, contact your dealer.

Electrical System

Electrical System Overload

The vehicle has fuses and circuit breakers to protect against an electrical system overload.

When the current electrical load is too heavy, the circuit breaker opens and closes, protecting the circuit until the current load returns to normal or the problem is fixed. This greatly reduces the chance of circuit overload and fire caused by electrical problems.

Fuses and circuit breakers protect power devices in the vehicle.

Replace a bad fuse with a new one of the identical size and rating.

If there is a problem on the road and a fuse needs to be replaced, the same amperage fuse can be borrowed. Choose some feature of the vehicle that is not needed to use and replace it as soon as possible.

Headlamp Wiring

An electrical overload may cause the lamps to go on and off, or in some cases to remain off. Have the headlamp wiring checked right away if the lamps go on and off or remain off.

Windshield Wipers

If the wiper motor overheats due to heavy snow or ice, the windshield wipers will stop until the motor cools and will then restart.

Although the circuit is protected from electrical overload, overload due to heavy snow or ice may cause wiper linkage damage. Always clear ice and heavy snow from the windshield before using the windshield wipers.

If the overload is caused by an electrical problem and not snow or ice, be sure to get it fixed.

Fuses

The wiring circuits in the vehicle are protected from short circuits by fuses. This greatly reduces the chance of fires caused by electrical problems.

Look at the silver-colored band inside the fuse. If the band is broken or melted, replace the fuse. Be sure you replace a bad fuse with a new one of the identical size and rating.

Fuses of the same amperage can be temporarily borrowed from another fuse location, if a fuse goes out. Replace the fuse as soon as you can.

Spare fuses of various ratings are provided in the Engine Compartment Fuse Block and Rear Compartment Fuse Block.

Engine Compartment Fuse Block

⚠ Caution

Spilling liquid on any electrical component on the vehicle may damage it. Always keep the covers on any electrical component.

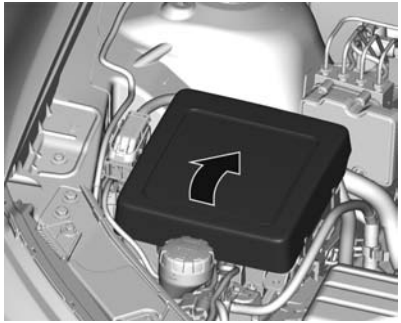

To access the engine compartment fuse block, remove the clip-on cover.

Ensure the cover is replaced securely.

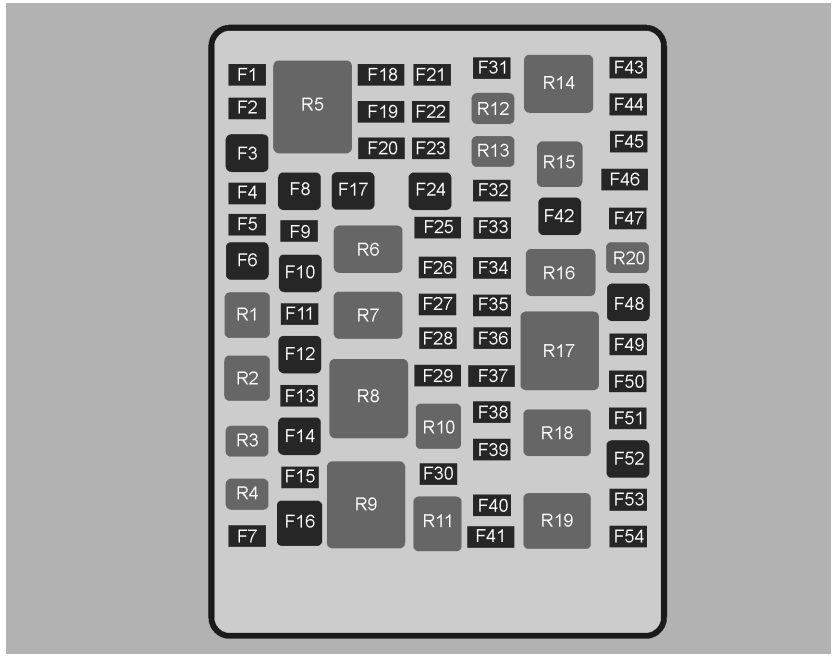

The vehicle may not be equipped with all of the fuses, relays and features shown.

Fuses	Usage
F1	Heated Mirrors
F2	Not Used
F3	Rear Defogger
F4	Not Used
F5	Spot Lamp Right
F6	Driver Power Seat
F7	Washer Pump
F8	Passenger Power Seat
F9	EMER/VEH/FT/LP
F10	Not Used
F11	Driving Lamps
F12	Headlamp Washer
F13	Spot Lamp Left
F14	ABS Pump
F15	ABS Valves

Fuses	Usage
F16	Not Used
F17	Not Used
F18	Heated Front Seats
F19	Not Used
F20	Not Used
F21	Front Passenger Window Switch
F22	Rear Wiper
F23	Sunroof
F24	Front Wipers
F25	Automatic Occupant Sensing/Instrument Cluster Ignition
F26	LRBEC Ignition
F27	Not Used
F28	Ignition/Injectors Even – V8
F29	Engine Control Module-V8, Ignition Odd-V6/EMIS

Fuses	Usage
F30	Not Used
F31	Not Used
F32	Fog Lamps
F33	Ignition-IP/BODY
F34	Fuel System Control Module Ignition
F35	Not Used
F36	ESCL
F37	EMIS 2/Ignition Even – V6
F38	Engine Control Module-V6, Injectors/ Ignition Odd – V8
F39	INCLR Pump
F40	Not Used
F41	Transmission Control Module/Electric Power Steering
F42	Starter Motor
F43	Not Used

Fuses	Usage
F44	Left HID Headlamp
F45	Right HID Headlamp
F46	Left and Right High-Beam Headlamp
F47	Horn
F48	Engine Cooling Fan
F49	Automatic Headlamp Leveling
F50	Transmission Control Module Ignition
F51	Engine Control Module Ignition
F52	Brake Vacuum Pump
F53	Air Conditioning Compressor Clutch
F54	Vaporizer Control Module

Relays

Relays	Usage
R1	Driving Lamps
R2	Headlamp Washer
R3	Rear Washer Pump
R4	Front Washer Pump
R5	Rear Defogger
R6	Front Wiper Control
R7	Wiper Speed
R8	Engine Control Module
R9	Not Used
R10	INCLR Pump
R11	Not Used
R12	Rear Wiper Control
R13	Fog Lamps
R14	Low-Beam Headlamps
R15	High-Beam Headlamps
R16	Starter
R17	Run/Crank
R18	Brake Vacuum Pump
R19	Air Conditioning Control
R20	Horn

Relays R3, R4, R12, R13, and R20 are PCB mounted relays.

Instrument Panel Fuse Block

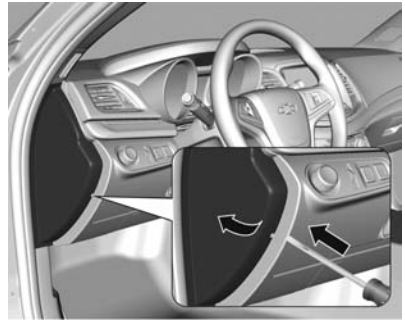

Removing the Fuse Block Cover

Insert a flat bladed tool in the slot indicated and remove the fuse panel cover.

Refitting the Fuse Block Cover

1. Insert the rear edge of the fuse panel cover under the door seal.
2. Locate the hooks on the cover into the end of the instrument panel.
3. Rotate and push the cover back into position.

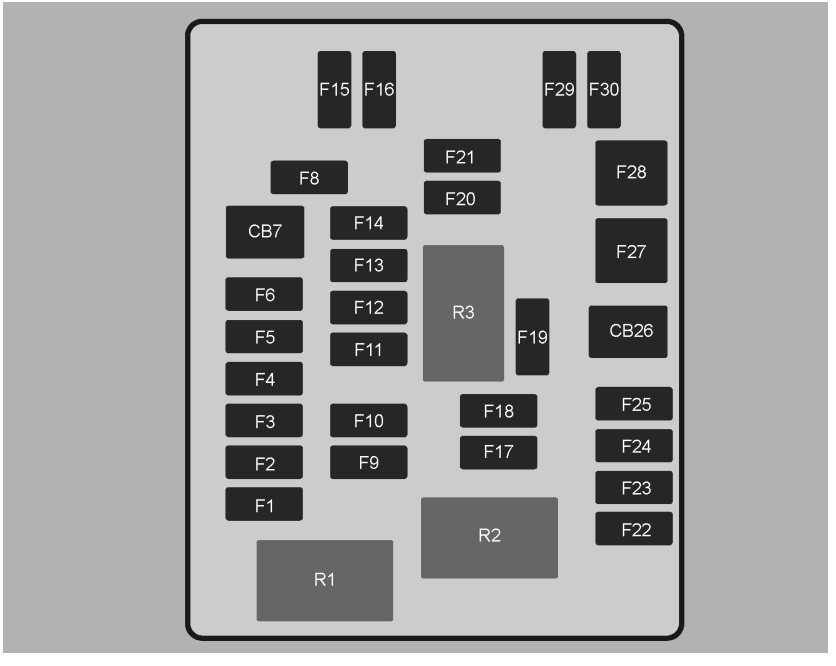

The vehicle may not be equipped with all of the fuses, relays and features shown.

Fuses

Fuses	Usage
F1	Body Control Module 1
F2	Diagnostic Link Connector
F3	LPG Shut-Off Solenoid
F4	Body Control Module 2
F5	Ignition Switch
F6	Electric Steering Control Lock
CB7	Not Used
F8	Not Used
F9	Not Used
F10	Not Used
F11	Shunt 1
F12	Airbag/Automatic Occupant Sensing
F13	Instrument Cluster
F14	HVAC Control Module
F15	Rain Sensor
F16	Body Control Module 3
F17	LPG Shut-Off Solenoid
F18	Not Used
F19	SWC Backlight
F20	Not Used
F21	Not Used
F22	Shunt 2
F23	Body Control Module 4
F24	Body Control Module 5
F25	Body Control Module 6
CB26	Not Used
F27	Body Control Module 8
F28	Blower Fan
F29	Accessories
F30	Body Control Module 7

Relays

Relays	Usage
R1	Logistics
R2	LPG Shut-Off Solenoid
R3	LPG Shut-Off Solenoid

Rear Compartment Fuse Block

The fuse panel is on the left side of the trunk, above the battery.

- Rotate the catch counterclockwise to unlatch the cover.
- To refit, replace the cover and rotate the catch clockwise to secure.

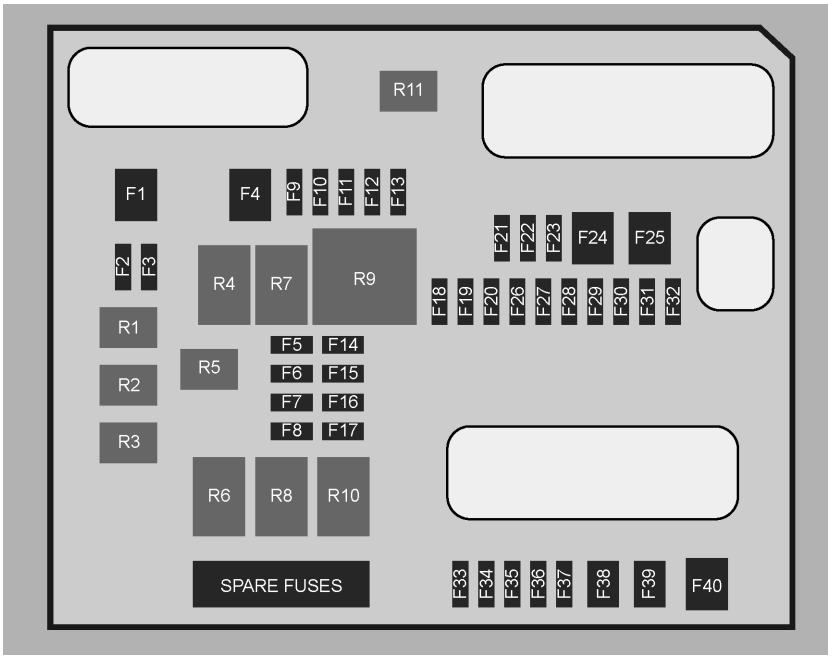

The vehicle may not be equipped with all of the fuses, relays and features shown.

Fuses

Fuses	Usage
F1	Driver Front/Left Rear Window
F2	EMER/VEH/ACCY
F3	Trunk Release
F4	Passive Entry Passive Start-BATT 2
F5	Radio
F6	Not Used
F7	Not Used
F8	Fuel System Control Module
F9	MRTD
F10	Decklid Flashing Lamps/EDI Module
F11	Auxiliary Battery
F12	Not Used

Fuses	Usage
F13	Not Used
F14	Rear Seat Entertainment
F15	Automatic Headlamp Leveling
F16	Not Used
F17	Not Used
F18	OnStar
F19	Mirror/Window Module
F20	Canister Vent Solenoid
F21	Passive Entry Passive Start-BATT 1
F22	Memory Seat Module
F23	Amplifier
F24	Passenger Front/ Right Rear Window
F25	Electric Parking Brake
F26	Tailgate Module

Fuses	Usage
F27	Camera Ignition
F28	Front Vent Seat Ignition
F29	Trailer Module Ignition
F30	Advanced Park Assist/Side Blind Zone Alert
F31	Engine Control Module
F32	Auxiliary Gauges
F33	Retained Accessory Power
F34	Battery Voltage Sensing
F35	Tailgate Motor
F36	Rear Accessory Power Outlet
F37	Interior Accessory Power Outlet
F38	Cigar Lighter

Fuses	Usage
F39	Not Used
F40	Trailer Module

Relays

Relays	Usage
R1	Trunk Release
R2	Accessory
R3	Not Used
R4	Run
R5	Not Used
R6	Retained Accessory Power
R7	Logistics Mode
R8	Not Used
R9	Not Used
R10	Not Used
R11	Child Locks

Relays R1, R2, R3, and R5 are PCB mounted relays.

Wheels and Tires

Tires

Every new GM vehicle has high-quality tires made by a leading tire manufacturer. See the warranty manual for information regarding the tire warranty and where to get service. For additional information refer to the tire manufacturer.

⚠ Warning

- Poorly maintained and improperly used tires are dangerous.
- Overloading the tires can cause overheating as a result of too much flexing. There could be a blowout

(Continued)

Warning (Continued)

and a serious crash. See *Vehicle Load Limits on page 9-9*.

- Underinflated tires pose the same danger as overloaded tires. The resulting crash could cause serious injury. Check all tires frequently to maintain the recommended pressure. Tire pressure should be checked when the tires are cold.
- Overinflated tires are more likely to be cut, punctured, or broken by a sudden impact — such as when hitting a pothole. Keep tires at the recommended pressure.

(Continued)

Warning (Continued)

- Worn or old tires can cause a crash. If the tread is badly worn, replace them.
- Replace any tires that have been damaged by impacts with potholes, curbs, etc.
- Improperly repaired tires can cause a crash. Only the dealer or an authorized tire service center should repair, replace, dismount, and mount the tires.
- Do not spin the tires in excess of 56 km/h (35 mph) on slippery surfaces such as snow, mud, ice, etc. Excessive spinning may cause the tires to explode.

All-Season Tires

This vehicle may come with all-season tires. These tires are designed to provide good overall performance on most road surfaces and weather conditions. Original equipment tires designed to GM's specific tire performance criteria have a TPC specification code molded onto the sidewall. Original equipment all-season tires can be identified by the last two characters of this TPC code, which will be “MS.”

Consider installing winter tires on the vehicle if frequent driving on snow or ice-covered roads is expected. All-season tires provide adequate performance for most winter driving conditions, but they may not offer the same level of traction or performance as winter tires on snow or ice-covered roads. See *Winter Tires on page 10-41*.

Winter Tires

This vehicle was not originally equipped with winter tires. Winter tires are designed for increased traction on snow and ice-covered roads. Consider installing winter tires on the vehicle if frequent driving on ice or snow covered roads is expected. See your dealer for details regarding winter tire availability and proper tire selection. Also, see *Buying New Tires on page 10-56*.

With winter tires, there may be decreased dry road traction, increased road noise, and shorter tread life. After changing to winter tires, be alert for changes in vehicle handling and braking.

If using winter tires:

- Use tires of the same brand and tread type on all four wheel positions.

- Use only radial ply tires of the same size, load range, and speed rating as the original equipment tires.

Winter tires with the same speed rating as the original equipment tires may not be available for H, V, W, Y, and ZR speed rated tires. If winter tires with a lower speed rating are chosen, never exceed the tire's maximum speed capability.

Low-Profile Tires

⚠ Caution

Low-profile tires are more susceptible to damage from road hazards or curb impact than standard profile tires. Tire and/or wheel assembly damage can occur when coming into contact with road hazards like potholes, or sharp edged objects, or when sliding into a curb. The warranty does not cover this type of

(Continued)

Caution (Continued)

damage. Keep tires set to the correct inflation pressure and when possible, avoid contact with curbs, potholes, and other road hazards.

Tire Sidewall Labeling

Useful information about a tire is molded into its sidewall. The examples show a typical passenger vehicle tire and a compact spare tire sidewall.

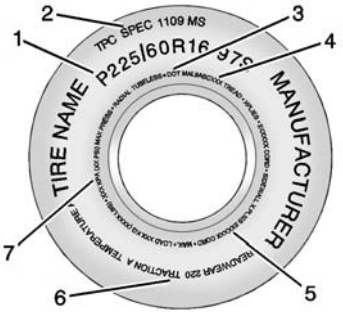

Passenger (P-Metric) Tire Example

(1) Tire Size: The tire size is a combination of letters and numbers used to define a particular tire's width, height, aspect ratio, construction type, and service description. See the “Tire Size” illustration later in this section.

(2) TPC Spec (Tire Performance Criteria Specification): Original equipment tires designed to GM's specific tire performance

criteria have a TPC specification code molded onto the sidewall. GM's TPC specifications meet or exceed all federal safety guidelines.

(3) DOT (Department of Transportation): The Department of Transportation (DOT) code indicates that the tire is in compliance with the U.S. Department of Transportation Motor Vehicle Safety Standards.

DOT Tire Date of Manufacture: The last four digits of the TIN indicate the tire manufactured date. The first two digits represent the week (01–52) and the last two digits, the year. For example, the third week of the year 2010 would have a four-digit DOT date of 0310.

(4) Tire Identification Number (TIN): The letters and numbers following the DOT (Department of Transportation) code are the Tire Identification Number (TIN). The TIN shows the manufacturer and plant code, tire size, and date the tire was manufactured. The TIN is molded onto both sides of the tire, although only one side may have the date of manufacture.

(5) Tire Ply Material: The type of cord and number of plies in the sidewall and under the tread.

(6) Uniform Tire Quality Grading (UTQG): Tire manufacturers are required to grade tires based on three performance factors: treadwear, traction, and temperature resistance. For more information see *Uniform Tire Quality Grading on page 10-58*.

(7) Maximum Cold Inflation Load Limit: Maximum load that can be carried and the maximum pressure needed to support that load.

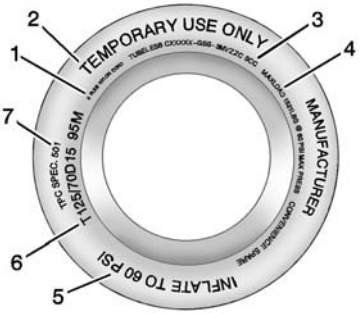

Compact Spare Tire Example

(1) Tire Ply Material: The type of cord and number of plies in the sidewall and under the tread.

(2) Temporary Use Only: The compact spare tire or temporary use tire should not be driven at speeds over 80 km/h (50 mph). The compact spare tire is for

emergency use when a regular road tire has lost air and gone flat. If the vehicle has a compact spare tire, see *Compact Spare Tire on page 10-67* and *If a Tire Goes Flat on page 10-61*.

(3) Tire Identification Number (TIN): The letters and numbers following the DOT (Department of Transportation) code are the Tire Identification Number (TIN). The TIN shows the manufacturer and plant code, tire size, and date the tire was manufactured. The TIN is molded onto both sides of the tire, although only one side may have the date of manufacture.

(4) Maximum Cold Inflation Load Limit: Maximum load that can be carried and the maximum pressure needed to support that load.

(5) Tire Inflation: The temporary use tire or compact spare tire should be inflated to 420 kPa (60 psi). For more information on tire pressure and inflation see *Tire Pressure on page 10-48*.

(6) Tire Size: A combination of letters and numbers define a tire's width, height, aspect ratio, construction type, and service description. The letter T as the first character in the tire size means the tire is for temporary use only.

(7) TPC Spec (Tire Performance Criteria Specification): Original equipment tires designed to GM's specific tire performance criteria have a TPC specification code molded onto the sidewall. GM's TPC specifications meet or exceed all federal safety guidelines.

Tire Designations

Tire Size

The following is an example of a typical passenger vehicle tire size.

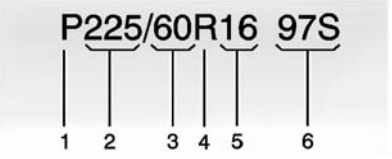

(1) Passenger (P-Metric) Tire: The United States version of a metric tire sizing system. The letter P as the first character in the tire size means a passenger vehicle tire engineered to standards set by the U.S. Tire and Rim Association.

(2) Tire Width: The three-digit number indicates the tire section width in millimeters from sidewall to sidewall.

(3) Aspect Ratio: A two-digit number that indicates the tire height-to-width measurements. For example, if the tire size aspect ratio is 60, as shown in item 3 of the illustration, it would mean that the tire's sidewall is 60 percent as high as it is wide.

(4) Construction Code: A letter code is used to indicate the type of ply construction in the tire. The letter R means radial ply construction; the letter D means diagonal or bias ply construction; and the letter B means belted-bias ply construction.

(5) Rim Diameter: Diameter of the wheel in inches.

(6) Service Description: These characters represent the load index and speed rating of the tire. The load index represents the load carrying capacity a tire is certified to carry. The speed rating is the maximum speed a tire is certified to carry a load.

Tire Terminology and Definitions

Air Pressure: The amount of air inside the tire pressing outward on each square inch of the tire. Air pressure is expressed in kPa (kilopascal) or psi (pounds per square inch).

Accessory Weight: The combined weight of optional accessories. Some examples of optional accessories are automatic transmission, power windows, power seats, and air conditioning.

Aspect Ratio: The relationship of a tire's height to its width.

Belt: A rubber coated layer of cords between the plies and the tread. Cords may be made from steel or other reinforcing materials.

Bead: The tire bead contains steel wires wrapped by steel cords that hold the tire onto the rim.

Bias Ply Tire: A pneumatic tire in which the plies are laid at alternate angles less than 90 degrees to the centerline of the tread.

Cold Tire Pressure: The amount of air pressure in a tire, measured in kPa (kilopascal) or psi (pounds per square inch) before a tire has built up heat from driving. See *Tire Pressure on page 10-48*.

Curb Weight: The weight of a motor vehicle with standard and optional equipment including the

maximum capacity of fuel, oil, and coolant, but without passengers and cargo.

DOT Markings: A code molded into the sidewall of a tire signifying that the tire is in compliance with the U.S. Department of Transportation (DOT) Motor Vehicle Safety Standards. The DOT code includes the Tire Identification Number (TIN), an alphanumeric designator which can also identify the tire manufacturer, production plant, brand, and date of production.

GVWR: Gross Vehicle Weight Rating. See *Vehicle Load Limits on page 9-9*.

GAWR FRT: Gross Axle Weight Rating for the front axle. See *Vehicle Load Limits on page 9-9*.

GAWR RR: Gross Axle Weight Rating for the rear axle. See *Vehicle Load Limits on page 9-9*.

Intended Outboard Sidewall: The side of an asymmetrical tire that must always face outward when mounted on a vehicle.

Kilopascal (kPa): The metric unit for air pressure.

Light Truck (LT-Metric) Tire: A tire used on light duty trucks and some multipurpose passenger vehicles.

Load Index: An assigned number ranging from 1 to 279 that corresponds to the load carrying capacity of a tire.

Maximum Inflation Pressure: The maximum air pressure to which a cold tire can be inflated. The maximum air pressure is molded onto the sidewall.

Maximum Load Rating: The load rating for a tire at the maximum permissible inflation pressure for that tire.

Maximum Loaded Vehicle Weight: The sum of curb weight, accessory weight, vehicle capacity weight, and production options weight.

Normal Occupant Weight: The number of occupants a vehicle is designed to seat multiplied by 68 kg (150 lb). See *Vehicle Load Limits on page 9-9*.

Occupant Distribution: Designated seating positions.

Outward Facing Sidewall: The side of an asymmetrical tire that has a particular side that faces outward when mounted on a vehicle. The side of the tire that contains a whitewall, bears white lettering, or bears manufacturer, brand, and/or

model name molding that is higher or deeper than the same moldings on the other sidewall of the tire.

Passenger (P-Metric) Tire: A tire used on passenger cars and some light duty trucks and multipurpose vehicles.

Recommended Inflation Pressure: Vehicle manufacturer's recommended tire inflation pressure as shown on the tire placard. See *Tire Pressure on page 10-48* and *Vehicle Load Limits on page 9-9*.

Radial Ply Tire: A pneumatic tire in which the ply cords that extend to the beads are laid at 90 degrees to the centerline of the tread.

Rim: A metal support for a tire and upon which the tire beads are seated.

Sidewall: The portion of a tire between the tread and the bead.

Speed Rating: An alphanumeric code assigned to a tire indicating the maximum speed at which a tire can operate.

Traction: The friction between the tire and the road surface. The amount of grip provided.

Tread: The portion of a tire that comes into contact with the road.

Treadwear Indicators: Narrow bands, sometimes called wear bars, that show across the tread of a tire when only 1.6 mm (1/16 in) of tread remains. See *When It Is Time for New Tires on page 10-55*.

UTQGS (Uniform Tire Quality Grading Standards): A tire information system that provides consumers with ratings for a tire's traction, temperature, and treadwear. Ratings are determined by tire manufacturers using government testing procedures. The ratings are molded into the sidewall of the tire. See *Uniform Tire Quality Grading on page 10-58*.

Vehicle Capacity Weight: The number of designated seating positions multiplied by 68 kg (150 lb) plus the rated cargo load. See *Vehicle Load Limits on page 9-9*.

Vehicle Maximum Load on the Tire: Load on an individual tire due to curb weight, accessory weight, occupant weight, and cargo weight.

Vehicle Placard: A label permanently attached to a vehicle showing the vehicle capacity weight and the original equipment tire size and

recommended inflation pressure. See “Tire and Loading Information Label” under *Vehicle Load Limits on page 9-9*.

Tire Pressure

Tires need the correct amount of air pressure to operate effectively.

⚠ Caution

Neither tire underinflation nor overinflation is good. Underinflated tires, or tires that do not have enough air, can result in:

- Tire overloading and overheating which could lead to a blowout.
- Premature or irregular wear.
- Poor handling.

(Continued)

Caution (Continued)

- Reduced fuel economy.

Overinflated tires, or tires that have too much air, can result in:

- Unusual wear.
- Poor handling.
- Rough ride.
- Needless damage from road hazards.

The Tire and Loading Information label on the vehicle indicates the original equipment tires and the correct cold tire inflation pressures. The recommended pressure is the minimum air pressure needed to support the vehicle's maximum load carrying capacity. See *Vehicle Load Limits on page 9-9*.

How the vehicle is loaded affects vehicle handling and ride comfort. Never load the vehicle with more weight than it was designed to carry.

When to Check

Check the tires once a month or more. Do not forget to check the spare tire. If the vehicle has a compact spare tire, it should be at 420 kPa (60 psi). See *Compact Spare Tire on page 10-67* and *Full-Size Spare Tire on page 10-68* for additional information.

How to Check

Use a good quality pocket-type gauge to check tire pressure. Proper tire inflation cannot be determined by looking at the tire. Check the tire inflation pressure when the tires are cold, meaning

the vehicle has not been driven for at least three hours or no more than 1.6 km (1 mi).

Remove the valve cap from the tire valve stem. Press the tire gauge firmly onto the valve to get a pressure measurement. If the cold tire inflation pressure matches the recommended pressure on the Tire and Loading Information label, no further adjustment is necessary. If the inflation pressure is low, add air until the recommended pressure is reached. If the inflation pressure is high, press on the metal stem in the center of the tire valve to release air.

Re-check the tire pressure with the tire gauge.

Return the valve caps on the valve stems to prevent leaks and keep out dirt and moisture.

Tire Pressure Monitor System

The Tire Pressure Monitor System (TPMS) uses radio and sensor technology to check tire pressure levels. The TPMS sensors monitor the air pressure in your tires and transmit tire pressure readings to a receiver located in the vehicle.

Each tire, including the spare (if provided), should be checked monthly when cold and inflated to the inflation pressure recommended by the vehicle manufacturer on the vehicle placard or tire inflation pressure label. (If your vehicle has tires of a different size than the size indicated on the vehicle placard or tire inflation pressure label, you should determine the proper tire inflation pressure for those tires.)

As an added safety feature, your vehicle has been equipped with a tire pressure monitoring system (TPMS) that illuminates a low tire pressure telltale when one or more of your tires is significantly under-inflated.

Accordingly, when the low tire pressure telltale illuminates, you should stop and check your tires as soon as possible, and inflate them to the proper pressure. Driving on a significantly under-inflated tire causes the tire to overheat and can lead to tire failure. Under-inflation also reduces fuel efficiency and tire tread life, and may affect the vehicle's handling and stopping ability.

Please note that the TPMS is not a substitute for proper tire maintenance, and it is the driver's responsibility to maintain correct tire pressure, even if under-inflation has not reached the level to trigger illumination of the TPMS low tire pressure telltale.

Your vehicle has also been equipped with a TPMS malfunction indicator to indicate when the system is not operating properly.

The TPMS malfunction indicator is combined with the low tire pressure telltale. When the system detects a malfunction, the telltale will flash for approximately one minute and then remain continuously illuminated. This sequence will continue upon subsequent vehicle start-ups as long as the malfunction exists.

When the malfunction indicator is illuminated, the system may not be able to detect or signal low tire pressure as intended. TPMS malfunctions may occur for a variety of reasons, including the installation of replacement or alternate tires or wheels on the vehicle that prevent the TPMS from functioning properly. Always check the TPMS malfunction telltale after replacing one or more tires or wheels on your vehicle to ensure that the replacement or alternate tires and wheels allow the TPMS to continue to function properly.

See *Tire Pressure Monitor Operation on page 10-50*.

See *Radio Frequency Statement on page 13-12*.

Tire Pressure Monitor Operation

This vehicle may have a Tire Pressure Monitor System (TPMS). The TPMS is designed to warn the driver when a low tire pressure condition exists. TPMS sensors are mounted onto each tire and wheel assembly, excluding the spare tire and wheel assembly. The TPMS sensors monitor the air pressure in the tires and transmit the tire pressure readings to a receiver located in the vehicle.

The full-size spare includes a sensor for the Tire Pressure Monitor System (TPMS). The compact spare tire/wheel does not include a TPMS sensor. The TPMS will not monitor or display the spare tire air pressure until the tire/wheel is installed at one of the four tire/wheel positions on the vehicle.

Once installed, the spare tire sensor code must be matched to the new position on the vehicle.

When a low tire pressure condition is detected, the TPMS illuminates the low tire pressure warning light located on the instrument cluster. If the warning light comes on, stop as soon as possible and inflate the tires to the recommended pressure shown on the Tire and Loading Information label. See *Vehicle Load Limits on page 9-9*.

A message to check the pressure in a specific tire may display in the Driver Information Center (DIC). The low tire pressure warning light and the DIC warning message, if equipped, come on at each ignition cycle until the tires are inflated to the correct inflation

pressure. Using the DIC, it may be possible to view the tire pressure levels. For additional information and details about the DIC operation and displays, see *Driver Information Center (DIC) on page 5-18*.

The low tire pressure warning light may come on in cool weather when the vehicle is first started, and then turn off as the vehicle is driven. This could be an early indicator that the air pressure is getting low and needs to be inflated to the proper pressure.

A Tire and Loading Information label shows the size of the original equipment tires and the correct inflation pressure for the tires when they are cold. See *Vehicle Load Limits on page 9-9*, for an example of the Tire and Loading Information label and its location. Also see *Tire Pressure on page 10-48*.

The TPMS can warn about a low tire pressure condition, but it does not replace normal tire maintenance. See *Tire Inspection on page 10-53*, *Tire Rotation on page 10-54*, and *Tires on page 10-40*.

⚠ Caution

Tire sealant materials are not all the same. A non-approved tire sealant could damage the TPMS sensors. TPMS sensor damage caused by using an incorrect tire sealant is not covered by the vehicle warranty. Always use only the GM approved tire sealant available through your dealer or included in the vehicle.

TPMS Malfunction Light and Message

The TPMS will not function properly if one or more of the TPMS sensors are missing or inoperable. When the system detects a malfunction, the low tire pressure warning light, defined above, flashes for about one minute and then stays on for the remainder of the ignition cycle. A DIC warning message may also display. The malfunction light and DIC warning message, if equipped, come on at each ignition cycle until the problem is corrected. Some of the conditions that can cause these to come on are:

- One of the road tires has been replaced with the spare tire. The spare tire does not have a TPMS sensor. The malfunction light and the DIC message, if equipped, should go off after the road tire is replaced and the sensor matching process is performed successfully. See "TPMS Sensor Matching Process" later in this section.

- The TPMS sensor matching process was not done or not completed successfully after rotating the tires. The malfunction light and the DIC message, if equipped, should go off after successfully completing the sensor matching process. See "TPMS Sensor Matching Process" later in this section.
- One or more TPMS sensors are missing or damaged. The malfunction light and the DIC message, if equipped, should go off when the TPMS sensors are installed and the sensor matching process is performed successfully. See your dealer for service.
- Replacement tires or wheels do not match the original equipment tires or wheels. Tires and wheels other than those recommended could prevent the TPMS from functioning properly. See *Buying New Tires on page 10-56*.
- Operating electronic devices or being near facilities using radio wave frequencies similar to the TPMS could cause the TPMS sensors to malfunction.

If the TPMS is not functioning properly, it cannot detect or signal a low tire condition. See your dealer for service if the TPMS malfunction light and DIC message, if equipped, come on and stay on.

TPMS Sensor Matching Process

Each TPMS sensor has a unique identification code. The identification code needs to be matched to a new tire/wheel position after rotating the vehicle's tires or replacing one or more of the TPMS sensors. Also, the TPMS sensor matching process should be performed after replacing a spare tire with a road tire containing the TPMS sensor. The malfunction light and the DIC message, if equipped, should go off at the next ignition cycle. The sensors are matched to the tire/wheel positions, using a TPMS relearn tool, in the following order: left front tire, right front tire, right rear tire, and left rear tire. See your dealer for service or to purchase a relearn tool.

There are two minutes to match the first tire/wheel position, and five minutes overall to match all four tire/wheel positions. If it takes longer, the matching process stops and must be restarted.

The TPMS sensor matching process is:

1. Set the parking brake.
2. Turn the ignition to ON/RUN with the engine off.
3. Use the MENU button to select the Vehicle Information Menu in the Driver Information Center (DIC).
4. Use the thumbwheel to scroll to the Tire Pressure Menu Item screen.

5. Press and hold the SET/CLR button to begin the sensor matching process.

   A message requesting acceptance of the process may display.

6. If requested, press the SET/CLR button again to confirm the selection.

   The horn sounds twice to signal the receiver is in relearn mode and the TIRE LEARN or TIRE LEARNING ACTIVE message displays on the DIC screen.

7. Start with the left front tire.
8. Place the relearn tool against the tire sidewall, near the valve stem. Then press the button to activate the TPMS sensor. A horn chirp confirms that the sensor identification code has been matched to this tire and wheel position.
9. Proceed to the right front tire, and repeat the procedure in Step 8.
10. Proceed to the right rear tire, and repeat the procedure in Step 8.
11. Proceed to the left rear tire, and repeat the procedure in Step 8. The horn sounds two times to indicate the sensor identification code has been matched to the left rear tire, and the TPMS sensor matching process is no longer active. The TIRE LEARN or TIRE LEARNING ACTIVE message on the DIC display screen goes off.
12. Turn the ignition to LOCK/OFF.
13. Set all four tires to the recommended air pressure level as indicated on the Tire and Loading Information label.

Tire Inspection

We recommend that the tires, including the spare tire, if the vehicle has one, be inspected for signs of wear or damage at least once a month.

Replace the tire if:

- The indicators at three or more places around the tire can be seen.
- There is cord or fabric showing through the tire's rubber.
- The tread or sidewall is cracked, cut, or snagged deep enough to show cord or fabric.
- The tire has a bump, bulge, or split.

- The tire has a puncture, cut, or other damage that cannot be repaired well because of the size or location of the damage.

Tire Rotation

Tires should be rotated every 12 000 km (7,500 mi). See *Maintenance Schedule on page 11-2*.

Tires are rotated to achieve a uniform wear for all tires. The first rotation is the most important.

Anytime unusual wear is noticed, rotate the tires as soon as possible, check for proper tire inflation pressure, and check for damaged tires or wheels. If the unusual wear continues after the rotation, check the wheel alignment. See *When It Is Time for New Tires on page 10-55* and *Wheel Replacement on page 10-59*.

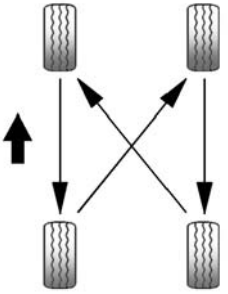

Use this rotation pattern when rotating the tires.

Do not include the spare tire in the tire rotation.

Adjust the front and rear tires to the recommended inflation pressure on the Tire and Loading Information label after the tires have been rotated. See *Tire Pressure on page 10-48* and *Vehicle Load Limits on page 9-9*.

Reset the Tire Pressure Monitor System. See *Tire Pressure Monitor Operation on page 10-50*.

Check that all wheel nuts are properly tightened. See “Wheel Nut Torque” under *Capacities and Specifications on page 12-2*.

⚠ Warning

Rust or dirt on a wheel, or on the parts to which it is fastened, can make wheel nuts become loose after time. The wheel could come off and cause an accident. When changing a wheel, remove any rust or dirt from places where the

(Continued)

Warning (Continued)

wheel attaches to the vehicle. In an emergency, a cloth or a paper towel can be used; however, use a scraper or wire brush later to remove all rust or dirt.

Lightly coat the center of the wheel hub with wheel bearing grease after a wheel change or tire rotation to prevent corrosion or rust build-up. Do not get grease on the flat wheel mounting surface or on the wheel nuts or bolts.

When It Is Time for New Tires

Factors such as maintenance, temperatures, driving speeds, vehicle loading, and road conditions affect the wear rate of the tires.

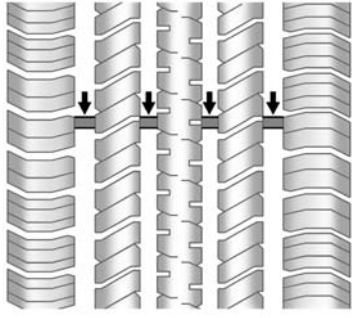

Treadwear indicators are one way to tell when it is time for new tires. Treadwear indicators appear when the tires have only 1.6 mm (1/16 in) or less of tread remaining. See *Tire Inspection on page 10-53* and *Tire Rotation on page 10-54*.

The rubber in tires ages over time. This also applies to the spare tire, if the vehicle has one, even if it is never used. Multiple factors including temperatures, loading conditions, and inflation pressure maintenance affect how fast aging takes place. GM recommends that tires, including the spare if equipped, be replaced after six years, regardless of tread wear. The tire manufacturer date is the last four digits of the DOT Tire Identification Number (TIN) which is molded into one side of the tire sidewall. The first two digits represent the week (01–52) and the last two digits, the year. For example, the third week of the year 2010 would have a four-digit DOT date of 0310.

Vehicle Storage

Tires age when stored normally mounted on a parked vehicle. Park a vehicle that will be stored for at least a month in a cool, dry, clean area away from direct sunlight to slow aging. This area should be free of grease, gasoline, or other substances that can deteriorate rubber.

Parking for an extended period can cause flat spots on the tires that may result in vibrations while driving. When storing a vehicle for

at least a month, remove the tires or raise the vehicle to reduce the weight from the tires.

Buying New Tires

GM has developed and matched specific tires for the vehicle. The original equipment tires installed were designed to meet General Motors Tire Performance Criteria Specification (TPC Spec) system rating. When replacement tires are needed, GM strongly recommends buying tires with the same TPC Spec rating.

GM's exclusive TPC Spec system considers over a dozen critical specifications that impact the overall performance of the vehicle, including brake system performance, ride and handling, traction control, and tire pressure monitoring performance. GM's TPC Spec number is molded onto the tire's sidewall near the tire size. If the tires have an all-season tread design, the TPC Spec number will be followed by MS for mud and snow. See *Tire Sidewall Labeling on page 10-42*.

GM recommends replacing worn tires in complete sets of four. Uniform tread depth on all tires will help to maintain the performance of the vehicle. Braking and handling performance may be adversely affected if all the tires are not replaced at the same time.
If proper rotation and maintenance have been done, all four tires should wear out at about the same time. See *Tire Rotation on page 10-54*.
However, if it is necessary to replace only one axle set of worn tires, place the new tires on the rear axle.

Winter tires with the same speed rating as the original equipment tires may not be available for H, V, W, Y and ZR speed rated tires. Never exceed the winter tires' maximum speed capability when using winter tires with a lower speed rating.

⚠ Warning

Tires could explode during improper service. Attempting to mount or dismount a tire could cause injury or death. Only your dealer or authorized tire service center should mount or dismount the tires.

⚠ Warning

Mixing tires of different sizes, brands, or types may cause loss of control of the vehicle, resulting in a crash or other vehicle damage. Use the correct size, brand, and type of tires on all wheels.

⚠ Warning

Using bias-ply tires on the vehicle may cause the wheel rim flanges to develop cracks after many miles of driving. A tire and/or wheel could fail suddenly and cause a crash. Use only radial-ply tires with the wheels on the vehicle.

If the vehicle tires must be replaced with a tire that does not have a TPC Spec number, make sure they are the same size, load range, speed rating, and construction (radial) as the original tires.

Vehicles that have a tire pressure monitoring system could give an inaccurate low-pressure warning if non-TPC Spec rated tires are installed. See *Tire Pressure Monitor System on page 10-49*.

The Tire and Loading Information label indicates the original equipment tires on the vehicle. See *Vehicle Load Limits on page 9-9*.

Different Size Tires and Wheels

If wheels or tires are installed that are a different size than the original equipment wheels and tires, vehicle performance, including its braking, ride and handling characteristics, stability, and resistance to rollover may be affected. If the vehicle has electronic systems such as antilock brakes, rollover airbags, traction control, electronic stability control, or All-Wheel Drive, the performance of these systems can also be affected.

⚠ Warning

If different sized wheels are used, there may not be an acceptable level of performance and safety if tires not recommended for those wheels are selected. This increases the chance of a crash and serious injury. Only use GM specific wheel and tire systems developed for the vehicle, and have them properly installed by a GM certified technician.

See *Buying New Tires on page 10-56* and *Accessories and Modifications on page 10-2*.

Uniform Tire Quality Grading

Quality grades can be found where applicable on the tire sidewall between tread shoulder and maximum section width. For example:

Treadwear 200 Traction AA Temperature A

The following information relates to the system developed by the United States National Highway Traffic Safety Administration (NHTSA), which grades tires by treadwear, traction, and temperature performance. This applies only to vehicles sold in the United States. The grades are molded on the sidewalls of most passenger car tires. The Uniform Tire Quality Grading (UTQG) system does not apply to deep tread, winter tires, compact spare tires, tires with nominal rim diameters of 10 to 12 inches (25 to 30 cm), or to some limited-production tires.

While the tires available on General Motors passenger cars and light trucks may vary with respect to these grades, they must also conform to federal safety requirements and additional General Motors Tire Performance Criteria (TPC) standards.

All Passenger Car Tires Must Conform to Federal Safety Requirements In Addition To These Grades.

Treadwear

The treadwear grade is a comparative rating based on the wear rate of the tire when tested under controlled conditions on a specified government test course. For example, a tire graded 150 would wear one and one-half (1½) times as well on the government course as a tire graded 100. The relative performance of tires depends upon the actual conditions of their use, however, and may depart significantly from the norm due to variations in driving habits, service practices and differences in road characteristics and climate.

Traction

The traction grades, from highest to lowest, are AA, A, B, and C. Those grades represent the tire's ability to stop on wet pavement as measured under controlled conditions on specified government test surfaces of asphalt and concrete. A tire marked C may have poor traction performance. Warning: The traction grade assigned to this tire is based on

straight-ahead braking traction tests, and does not include acceleration, cornering, hydroplaning, or peak traction characteristics.

Temperature

The temperature grades are A (the highest), B, and C, representing the tire's resistance to the generation of heat and its ability to dissipate heat when tested under controlled conditions on a specified indoor laboratory test wheel. Sustained high temperature can cause the material of the tire to degenerate and reduce tire life, and excessive temperature can lead to sudden tire failure. The grade C corresponds to a level of performance which all passenger car tires must meet under the Federal Motor Safety Standard No. 109. Grades B and A represent higher levels of performance on the laboratory test wheel than the minimum required by law. Warning: The temperature grade for this tire is established for a tire that is properly inflated and not overloaded. Excessive speed, underinflation, or excessive loading, either separately or in combination, can cause heat buildup and possible tire failure.

Wheel Alignment and Tire Balance

The tires and wheels were aligned and balanced at the factory to provide the longest tire life and best overall performance. Adjustments to wheel alignment and tire balancing are not necessary on a regular basis. Consider an alignment check if there is unusual tire wear or the vehicle is significantly pulling to one side or the other. Some slight pull to the left or right, depending on the crown of the road and/or other road surface variations such as troughs or ruts, is normal. If the vehicle is vibrating when driving on a smooth road, the tires and wheels may need to be rebalanced. See your dealer for proper diagnosis.

Wheel Replacement

Replace any wheel that is bent, cracked, or badly rusted or corroded. If wheel nuts keep coming loose, the wheel, wheel bolts, and wheel nuts should be replaced. If the wheel leaks air, replace it. Some aluminum wheels can be repaired. See your dealer if any of these conditions exist.

Your dealer will know the kind of wheel that is needed.

Each new wheel should have the same load-carrying capacity, diameter, width, offset, and be mounted the same way as the one it replaces.

Replace wheels, wheel bolts, wheel nuts, or Tire Pressure Monitor System (TPMS) sensors with new GM original equipment parts.

⚠ Warning

Using the wrong replacement wheels, wheel bolts, or wheel nuts can be dangerous. It could affect the braking and handling of the vehicle. Tires can lose air, and cause loss of control, causing a crash. Always use the correct wheel, wheel bolts, and wheel nuts for replacement.

⚠ Caution

The wrong wheel can also cause problems with bearing life, brake cooling, speedometer or odometer calibration, headlamp aim, bumper height, vehicle

(Continued)

Caution (Continued)

ground clearance, and tire or tire chain clearance to the body and chassis.

Used Replacement Wheels

⚠ Warning

Replacing a wheel with a used one is dangerous. How it has been used or how far it has been driven may be unknown. It could fail suddenly and cause a crash. When replacing wheels, use a new GM original equipment wheel.

Tire Chains

⚠ Warning

Do not use tire chains. There is not enough clearance. Tire chains used on a vehicle without the proper amount of clearance can cause damage to the brakes, suspension, or other vehicle parts. The area damaged by the tire chains could cause loss of control and a crash. Use another type of traction device only if its manufacturer recommends it for the vehicle's tire size combination and road conditions. Follow that manufacturer's instructions. To avoid vehicle damage, drive slowly and readjust or remove the traction device if it contacts the vehicle. Do not spin the wheels. If traction devices are used, install them on the rear tires.

If a Tire Goes Flat

It is unusual for a tire to blow out while driving, especially if the tires are maintained properly. See *Tires on page 10-40*. If air goes out of a tire, it is much more likely to leak out slowly. But if there ever is a blowout, here are a few tips about what to expect and what to do:

If a front tire fails, the flat tire creates a drag that pulls the vehicle toward that side. Take your foot off the accelerator pedal and grip the steering wheel firmly. Steer to maintain lane position, and then gently brake to a stop, well off the road, if possible.

A rear blowout, particularly on a curve, acts much like a skid and may require the same correction as used in a skid. Stop pressing the accelerator pedal and steer to straighten the vehicle. It may be very bumpy and noisy. Gently brake to a stop, well off the road, if possible.

⚠ Warning

Driving on a flat tire will cause permanent damage to the tire. Re-inflating a tire after it has been driven on while severely underinflated or flat may cause a blowout and a serious crash. Never attempt to re-inflate a tire that has been driven on while severely underinflated or flat. Have your dealer or an authorized tire service center repair or replace the flat tire as soon as possible.

⚠ Warning

Lifting a vehicle and getting under it to do maintenance or repairs is dangerous without the appropriate safety equipment and training. If a jack is provided with the vehicle, it is designed only for

(Continued)

Warning (Continued)

changing a flat tire. If it is used for anything else, you or others could be badly injured or killed if the vehicle slips off the jack. If a jack is provided with the vehicle, only use it for changing a flat tire.

If a tire goes flat, avoid further tire and wheel damage by driving slowly to a level place, well off the road, if possible. Turn on the hazard warning flashers. See *Hazard Warning Flashers on page 6-3*.

⚠ Warning

Changing a tire can be dangerous. The vehicle can slip off the jack and roll over or fall causing injury or death. Find a level place to change the tire. To help prevent the vehicle from moving:

(Continued)

Warning (Continued)

1. Set the parking brake firmly.
2. Put an automatic transmission in P (Park) or a manual transmission in 1 (First) or R (Reverse).
3. Turn off the engine and do not restart while the vehicle is raised.
4. Do not allow passengers to remain in the vehicle.
5. Place wheel blocks on both sides of the tire at the opposite corner of the tire being changed.

When the vehicle has a flat tire (2), use the following example as a guide to assist in the placement of the wheel blocks (1).

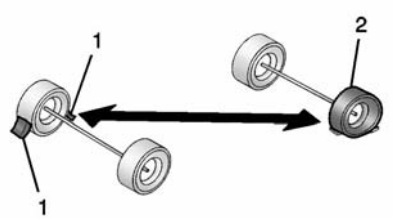

1. Wheel Block
2. Flat Tire

The following information explains how to repair or change a tire.

Tire Changing

Removing the Spare Tire and Tools

To access the spare tire and tools:

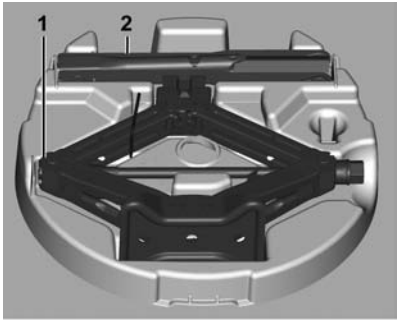

1. Jack
2. Wheel Wrench

1. Open the trunk.

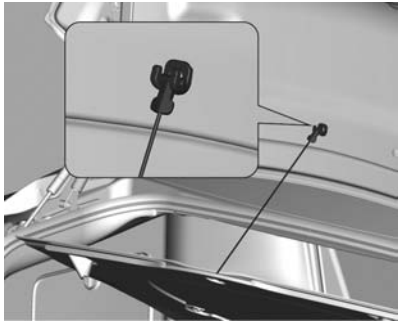

2. Lift the cover with the handle/ strap and attach the hook to the trunk lid.

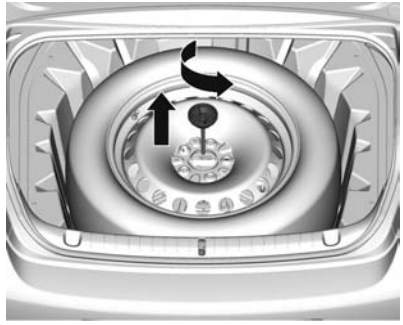

3. Turn the retainer nut counterclockwise to remove it.
4. Place the spare tire next to the tire being changed.

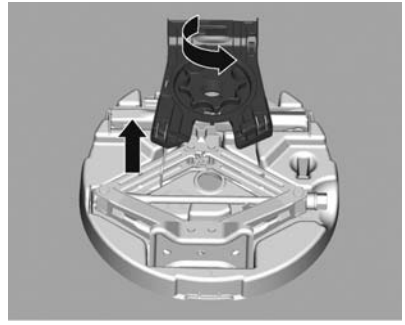

5. The vehicle may have a second retainer nut and panel.

   To access the tools, remove the second retainer nut and panel.
6. Remove the tools and place them near the tire being changed.

   Remove the tool container from the vehicle, if necessary.

Removing the Flat Tire and Installing the Spare Tire

1. Do a safety check before proceeding. See *If a Tire Goes Flat on page 10-61*.

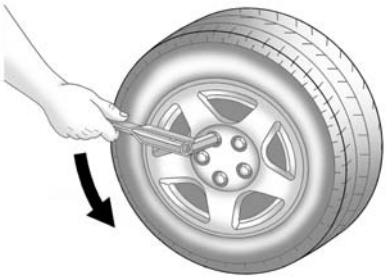

2. Turn the wheel wrench counterclockwise to loosen all the wheel nuts.

   Do not remove the wheel nuts.

3. Place the jack near the flat tire.
4. Place the spare tire near you.

⚠ Warning

Getting under a vehicle when it is lifted on a jack is dangerous. If the vehicle slips off the jack, you could be badly injured or killed. Never get under a vehicle when it is supported only by a jack.

⚠ Warning

Raising the vehicle with the jack improperly positioned can damage the vehicle and even make the vehicle fall. To help avoid personal injury and vehicle damage, be sure to fit the jack lift head into the proper location before raising the vehicle.

⚠ Warning

Lifting a vehicle and getting under it to do maintenance or repairs is dangerous without the appropriate safety equipment and training. If a jack is provided with the vehicle, it is designed only for changing a flat tire. If it is used for anything else, you or others could be badly injured or killed if the vehicle slips off the jack. If a jack is provided with the vehicle, only use it for changing a flat tire.

5. Unfold the wheel wrench so it forms a right angle.

6. Slide the wheel wrench onto the drive nut of the jack.

⚠ Caution

Make sure that the jack lift head is in the correct position or you may damage your vehicle. The repairs would not be covered by your warranty.

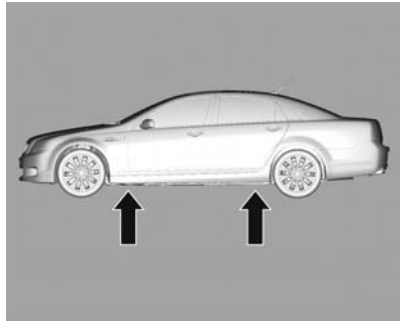

7. Position the jack lift head at the jack location nearest the flat tire. The locations are identified by cutouts in the underside of the door sill. The jack must not be used in any other position.

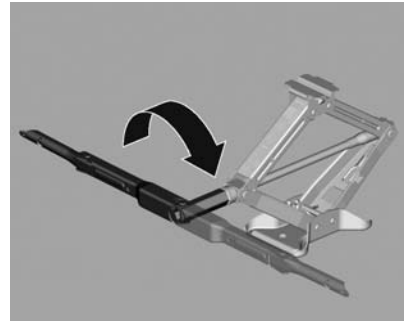

8. Raise the vehicle by turning the jack handle clockwise. Raise the vehicle far enough off the ground so there is enough room for the road tire to clear the ground.

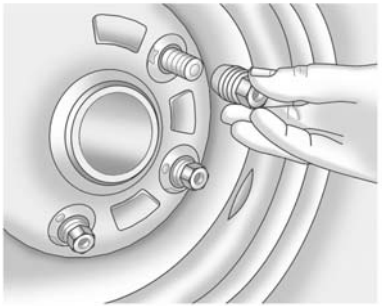

9. Remove all of the wheel nuts.
10. Remove the flat tire.

⚠ Warning

Rust or dirt on a wheel, or on the parts to which it is fastened, can make wheel nuts become loose after time. The wheel could come off and cause an accident. When changing a wheel, remove any rust or dirt from places where the wheel attaches to the vehicle. In

(Continued)

Warning (Continued)

an emergency, a cloth or a paper towel can be used; however, use a scraper or wire brush later to remove all rust or dirt.

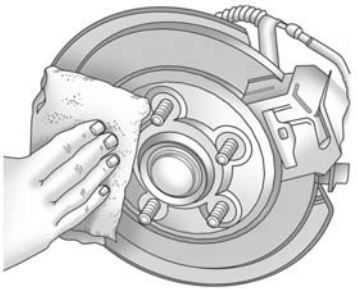

11. Remove any rust or dirt from the wheel bolts, mounting surfaces, and spare wheel.
12. Place the spare tire on the wheel-mounting surface.

⚠ Warning

Never use oil or grease on bolts or nuts because the nuts might come loose. The vehicle's wheel could fall off, causing a crash.

13. Reinstall the wheel nuts. Tighten each nut by hand until the wheel is held against the hub.
14. Lower the vehicle by turning the jack handle counterclockwise.

⚠ Warning

Wheel nuts that are improperly or incorrectly tightened can cause the wheels to become loose or come off. The wheel nuts should be tightened with a torque wrench to the proper torque specification after replacing. Follow the torque specification supplied by the

(Continued)

Warning (Continued)

aftermarket manufacturer when using accessory locking wheel nuts. See *Capacities and Specifications on page 12-2* for original equipment wheel nut torque specifications.

⚠ Caution

Improperly tightened wheel nuts can lead to brake pulsation and rotor damage. To avoid expensive brake repairs, evenly tighten the wheel nuts in the proper sequence and to the proper torque specification. See Capacities and Specifications for the wheel nut torque specification.

15. Tighten the wheel nuts firmly in a crisscross sequence, as shown.
16. Lower the jack all the way and remove the jack from under the vehicle.
17. Tighten the wheel nuts firmly with the wheel wrench.

Storing a Flat or Spare Tire and Tools

⚠ Warning

Storing a jack, a tire, or other equipment in the passenger compartment of the vehicle could cause injury. In a sudden stop or collision, loose equipment could strike someone. Store all these in the proper place.

Replace the jack, tools, container and flat tire in the trunk by reversing the steps used to remove them.

Compact Spare Tire

⚠ Warning

Driving with more than one compact spare tire at a time could result in loss of braking and handling. This could lead to a

(Continued)

Warning (Continued)

crash and you or others could be injured. Use only one compact spare tire at a time.

If this vehicle has a compact spare tire, it was fully inflated when new; however, it can lose air over time. Check the inflation pressure regularly. It should be 420 kPa (60 psi).

Stop as soon as possible and check that the spare tire is correctly inflated after being installed on the vehicle. The compact spare tire is designed for temporary use only. The vehicle will perform differently with the spare tire installed and it is recommended that the vehicle speed be limited to 80 km/h (50 mph). To conserve the tread of the spare tire, have the standard tire repaired or replaced as soon as convenient and return the spare tire to the storage area.

When using a compact spare tire, the ABS and Traction Control systems may engage until the spare tire is recognized by the vehicle, especially on slippery roads. Adjust driving to reduce possible wheel slip.

⚠ Caution

When the compact spare is installed, do not take the vehicle through an automatic car wash with guide rails. The compact spare can get caught on the rails which can damage the tire, wheel, and other parts of the vehicle.

Do not use the compact spare on other vehicles.

Do not mix the compact spare tire or wheel with other wheels or tires. They will not fit. Keep the spare tire and its wheel together.

⚠ Caution

Tire chains will not fit the compact spare. Using them can damage the vehicle and the chains. Do not use tire chains on the compact spare.

Full-Size Spare Tire

If the vehicle came with a full-size spare tire, it was fully inflated when new, however, it can lose air over time. Check the inflation pressure regularly. See *Tire Pressure on page 10-48* and *Vehicle Load Limits on page 9-9* for information regarding proper tire inflation and loading the vehicle. For instructions on how to remove, install, or store a spare tire, see *Tire Changing on page 10-62*.

After installing the spare tire on the vehicle, stop as soon as possible and check that the spare is correctly inflated.

The full-size spare includes a TPMS sensor. The TPMS will not monitor or display the spare tire air pressure until the tire/wheel is installed at one of the four tire/wheel positions on the vehicle. Once installed, the spare tire sensor code must be matched to the new position on the vehicle. See Tire Pressure Monitor Operation for information about matching the spare tire to the TPMS.

Have the damaged or flat road tire repaired or replaced and installed back onto the vehicle as soon as possible so the spare tire will be available in case it is needed again. Do not mix tires and wheels of different sizes, because they will not fit. Keep the spare tire and its wheel together.

Jump Starting

For more information about the vehicle battery, see *Battery on page 10-22*.

If the battery has run down, try to use another vehicle and some jumper cables to start your vehicle. Be sure to use the following steps to do it safely.

⚠ Warning

Batteries can hurt you. They can be dangerous because:

- They contain acid that can burn you.
- They contain gas that can explode or ignite.
- They contain enough electricity to burn you.

If you do not follow these steps exactly, some or all of these things can hurt you.

⚠ Caution

Ignoring these steps could result in costly damage to the vehicle that would not be covered by the vehicle warranty. Trying to start the vehicle by pushing or pulling it will not work, and it could damage the vehicle.

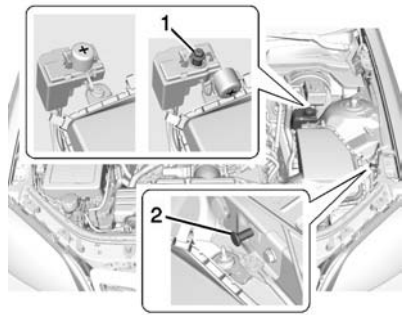

6.0L V8 Engine Shown, 3.6L V6 Engine Similar

1. Jump Start Positive Post
2. Jump Start Negative Post

The jump start positive (1) and negative (2) posts are in the engine compartment on the driver side of the vehicle.

These posts are used instead of a direct connection to the battery.

The positive jump start connection is covered by a red cap. Remove to expose the terminal.

1. Check the other vehicle. It must have a 12-volt battery with a negative ground system.

⚠ Caution

If the other vehicle does not have a 12-volt system with a negative ground, both vehicles can be damaged. Only use a vehicle that has a 12-volt system with a negative ground for jump starting.

2. Position the two vehicles so that they are not touching.
3. Set the parking brake firmly and put the shift lever in P (Park). See *Shifting Into Park on page 9-17*.

⚠ Caution

If any accessories are left on or plugged in during the jump starting procedure, they could be damaged. The repairs would not be covered by the vehicle warranty. Whenever possible, turn off or unplug all accessories on either vehicle when jump starting.

4. Turn the ignition to LOCK/OFF and switch off all lights and accessories in both vehicles, except the hazard warning flashers if needed.

⚠ Warning

An electric fan can start up even when the engine is not running and can injure you. Keep hands, clothing and tools away from any underhood electric fan.

⚠ Warning

Using a match near a battery can cause battery gas to explode. People have been hurt doing this, and some have been blinded. Use a flashlight if you need more light.

Be sure the battery has enough water. You do not need to add water to the battery installed in your new vehicle. But if a battery has filler caps, be sure the right amount of fluid is there. If it is low,

(Continued)

Warning (Continued)

add water to take care of that first. If you do not, explosive gas could be present.

Battery fluid contains acid that can burn you. Do not get it on you. If you accidentally get it in your eyes or on your skin, flush the place with water and get medical help immediately.

⚠ Warning

Fans or other moving engine parts can injure you badly. Keep your hands away from moving parts once the engine is running.

5. Connect one end of the red positive (+) cable to the jump start remote positive (+) post (1) of the discharged battery.
6. Connect the other end of the red positive (+) cable to the positive (+) terminal of the good battery.
7. Connect one end of the black negative (–) cable to the negative (–) terminal of the good battery.
8. Connect the other end of the black negative (–) cable to the remote negative (–) post (2).
9. Start the engine in the vehicle with the good battery and run the engine at idle speed for at least four minutes.
10. Try to start the vehicle that had the dead battery. If it will not start after a few tries, it probably needs service.

⚠ Caution

If the jumper cables are connected or removed in the wrong order, electrical shorting may occur and damage the vehicle. The repairs would not be covered by the vehicle warranty. Always connect and remove the jumper cables in the correct order, making sure that the cables do not touch each other or other metal.

Jumper Cable Removal

Reverse the sequence exactly when removing the jumper cables

Towing

Towing the Vehicle

⚠ Caution

Incorrectly towing a disabled vehicle may cause damage. The damage would not be covered by the vehicle warranty. Do not lash or hook to the chassis components — including the front and rear subframes, suspension control arms, and links — during towing and recovery of a disabled vehicle, or when securing the vehicle. Use the proper nylon strap harnesses around the tires to secure the vehicle.

Have the vehicle towed on a flatbed car carrier. A wheel lift tow truck could damage the vehicle.

Consult your dealer or a professional towing service if the disabled vehicle must be towed.

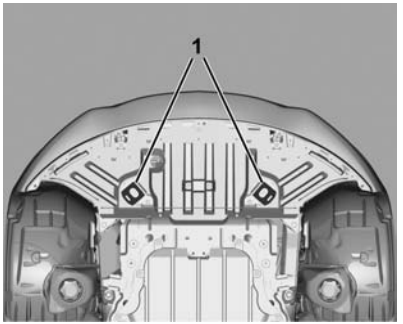

There are 2 oval-shaped slots (1) under the front of the vehicle that should be used to move a disabled vehicle. Use only these slots to hook to the vehicle. The slots can be accessed through the splash shield. Use an appropriate size T hook for the slot.

To tow the vehicle behind another vehicle for recreational purposes, such as behind a motor home, see “Recreational Vehicle Towing” following.

Recreational Vehicle Towing

⚠ Caution

Dolly towing or dinghy towing the vehicle may cause damage because of reduced ground clearance. Always put the vehicle on a flatbed truck or trailer.

The vehicle was neither designed nor intended to be towed with any of its wheels on the ground. If the vehicle must be towed, see *Towing the Vehicle on page 10-72*.

Appearance Care

Exterior Care

Locks

Locks are lubricated at the factory. Use a de-icing agent only when absolutely necessary, and have the locks greased after using. See *Recommended Fluids and Lubricants on page 11-9*.

Washing the Vehicle

To preserve the vehicle's finish, wash it often and out of direct sunlight.

⚠ Caution

Do not use petroleum-based, acidic, or abrasive cleaning agents as they can damage the vehicle's paint, metal, or plastic parts. If damage occurs, it would not be covered by the vehicle warranty. Approved cleaning

(Continued)

Caution (Continued)

products can be obtained from your dealer. Follow all manufacturer directions regarding correct product usage, necessary safety precautions, and appropriate disposal of any vehicle care product.

⚠ Caution

Avoid using high-pressure washes closer than 30 cm (12 in) to the surface of the vehicle. Use of power washers exceeding 8,274 kPa (1,200 psi) can result in damage or removal of paint and decals.

This symbol is on any underhood compartment electrical center that should not be power washed. This could cause damage that would not be covered by the vehicle warranty.

If using an automatic car wash, follow the car wash instructions. The windshield wiper and rear window wiper, if equipped, must be off. Remove any accessories that may be damaged or interfere with the car wash equipment.

Rinse the vehicle well, before washing and after, to remove all cleaning agents completely. If they are allowed to dry on the surface, they could stain.

Dry the finish with a soft, clean chamois or an all-cotton towel to avoid surface scratches and water spotting.

Finish Care

Application of aftermarket clearcoat sealant/wax materials is not recommended. If painted surfaces are damaged, see your dealer to have the damage assessed and repaired. Foreign materials such as

calcium chloride and other salts, ice melting agents, road oil and tar, tree sap, bird droppings, chemicals from industrial chimneys, etc., can damage the vehicle's finish if they remain on painted surfaces. Wash the vehicle as soon as possible. If necessary, use non-abrasive cleaners that are marked safe for painted surfaces to remove foreign matter.

Occasional hand waxing or mild polishing should be done to remove residue from the paint finish. See your dealer for approved cleaning products.

Do not apply waxes or polishes to uncoated plastic, vinyl, rubber, decals, simulated wood, or flat paint as damage can occur.

⚠ Caution

Machine compounding or aggressive polishing on a basecoat/clearcoat paint finish

(Continued)

Caution (Continued)

may damage it. Use only non-abrasive waxes and polishes that are made for a basecoat/clearcoat paint finish on the vehicle.

To keep the paint finish looking new, keep the vehicle garaged or covered whenever possible.

Protecting Exterior Bright Metal Moldings

⚠ Caution

Failure to clean and protect the bright metal moldings can result in a hazy white finish or pitting. This damage would not be covered by the vehicle warranty.

The bright metal moldings on the vehicle are aluminum. To prevent damage always follow these cleaning instructions:

- Be sure the molding is cool to the touch before applying any cleaning solution.
- Use a cleaning solution approved for aluminum. Some cleaners are highly acidic or contain alkaline substances and can damage the moldings.
- Always dilute a concentrated cleaner according to the manufacturer’s instructions.
- Do not use chrome cleaners.
- Do not use cleaners that are not intended for automotive use.
- Use a nonabrasive wax on the vehicle after washing to protect and extend the molding finish.

Cleaning Exterior Lamps/ Lenses, Emblems, Decals and Stripes

Use only lukewarm or cold water, a soft cloth, and a car washing soap to clean exterior lamps, lenses and emblems, decals and stripes. Follow instructions under "Washing the Vehicle" previously in this section.

Lamp covers are made of plastic, and some have a UV protective coating.

Use only lukewarm water, a soft cloth, and mild car washing soap to clean exterior lamps and lenses. Do not clean or wipe them while they are dry.

Do not use any of the following on lamp covers:

- Abrasive or caustic agents.
- Washer fluids and other cleaning agents in higher concentrations than suggested by the manufacturer.
- Solvents, alcohols, fuels, or other harsh cleaners.
- Ice scrapers or other hard items.
- Aftermarket appearance caps or covers while the lamps are illuminated, due to excessive heat generated.

⚠ Caution

Failure to clean lamps properly can cause damage to the lamp cover that would not be covered by the vehicle warranty.

⚠ Caution

Using wax on low gloss black finish stripes can increase the gloss level and create a non-uniform finish. Clean low gloss stripes with soap and water only.

Air Intakes

Clear debris from the air intakes, between the hood and windshield, when washing the vehicle.

Windshield and Wiper Blades

Clean the outside of the windshield with glass cleaner.

Clean rubber blades using a lint-free cloth or paper towel soaked with windshield washer fluid or a mild detergent. Wash the windshield thoroughly when cleaning the blades. Bugs, road grime, sap, and a buildup of vehicle wash/wax treatments may cause wiper streaking.

Replace the wiper blades if they are worn or damaged. Damage can be caused by extreme dusty conditions, sand, salt, heat, sun, snow, and ice.

Weatherstrips

Apply Dielectric silicone grease on weatherstrips to make them last longer, seal better, and not stick or squeak. Lubricate weatherstrips at least once a year. Hot, dry climates may require more frequent application. Black marks from rubber material on painted surfaces can be removed by rubbing with a clean cloth. See *Recommended Fluids and Lubricants on page 11-9*.

Tires

Use a stiff brush with tire cleaner to clean the tires.

⚠ Caution

Using petroleum-based tire dressing products on the vehicle may damage the paint finish and/or tires. When applying a tire dressing, always wipe off any overspray from all painted surfaces on the vehicle.

Wheels and Trim — Aluminum or Chrome

Use a soft, clean cloth with mild soap and water to clean the wheels. After rinsing thoroughly with clean water, dry with a soft, clean towel. A wax may then be applied.

⚠ Caution

Chrome wheels and other chrome trim may be damaged if the vehicle is not washed after driving on roads that have been sprayed with magnesium, calcium, or sodium chloride. These chlorides are used on roads for conditions such as ice and dust. Always wash the chrome with soap and water after exposure.

⚠ Caution

To avoid surface damage, do not use strong soaps, chemicals, abrasive polishes, cleaners, brushes, or cleaners that contain acid on aluminum or chrome-plated wheels. Use only approved cleaners. Also, never drive a vehicle with aluminum or chrome-plated wheels through an automatic car wash that uses silicone carbide tire cleaning brushes. Damage could occur and the repairs would not be covered by the vehicle warranty.

Door Drain Holes

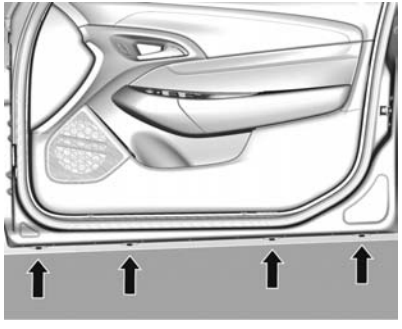

- Clear dirt and other foreign materials from the drain holes at the bottom of the door panels which could trap water inside the panels.
- Clean clogged drain holes.
- Avoid scratching the finish.

Steering, Suspension, and Chassis Components

Visually inspect steering, suspension, and chassis components for damaged, loose or missing parts or signs of wear at least once a year. Inspect the power steering for proper hook-up, binding, leaks, cracks, chafing, etc. Visually check constant velocity joint, boots and axle seals for leaks.

Body Component Lubrication

Lubricate all key lock cylinders, hood hinges, liftgate hinges, and the steel fuel door hinge unless the components are plastic. Applying silicone grease on weatherstrips with a clean cloth will make them last longer, seal better, and not stick or squeak.

Underbody Maintenance

At least twice a year, Spring and Fall, use plain water to flush dirt and debris from the vehicle's underbody. Your dealer or an underbody car washing system can do this. If not removed, rust and corrosion can develop.

Sheet Metal Damage

If the vehicle is damaged and requires sheet metal repair or replacement, make sure the body repair shop applies anti-corrosion material to parts repaired or replaced to restore corrosion protection.

Original manufacturer replacement parts will provide the corrosion protection while maintaining the vehicle warranty.

Finish Damage

Quickly repair minor chips and scratches with touch-up materials available from your dealer to avoid corrosion. Larger areas of finish damage can be corrected in your dealer's body and paint shop.

Chemical Paint Spotting

Airborne pollutants can fall upon and attack painted vehicle surfaces causing blotchy, ring-shaped discolorations, and small, irregular

dark spots etched into the paint surface. Refer to “Finish Care” previously in this section.

Interior Care

To prevent dirt particle abrasions, regularly clean the vehicle's interior. Immediately remove any soils. Note that newspapers or dark garments that can transfer color to home furnishings can also permanently transfer color to the vehicle's interior.

Use a soft bristle brush to remove dust from knobs and crevices on the instrument cluster. Using a mild soap solution, immediately remove hand lotions, sunscreen, and insect repellent from all interior surfaces or permanent damage may result.

Your dealer may have products for cleaning the interior. Use cleaners specifically designed for the surfaces being cleaned to prevent permanent damage. Apply all cleaners directly to the cleaning cloth. Do not spray cleaners directly on any switches or controls. Cleaners should be removed quickly. Never allow cleaners to remain on the surface being cleaned for extended periods of time.

Cleaners may contain solvents that can become concentrated in the interior. Before using cleaners, read and adhere to all safety instructions on the label. While cleaning the interior, maintain adequate ventilation by opening the doors and windows.

To prevent damage, do not clean the interior using the following cleaners or techniques:

- Never use a razor or any other sharp object to remove a soil from any interior surface.
- Never use a brush with stiff bristles.
- Never rub any surface aggressively or with excessive pressure.
- Do not use laundry detergents or dishwashing soaps with degreasers. For liquid cleaners, use approximately 20 drops per 3.8 L (1 gal) of water.
  A concentrated soap solution will leave a residue that creates streaks and attracts dirt. Do not use solutions that contain strong or caustic soap.
- Do not heavily saturate the upholstery when cleaning.
- Do not use solvents or cleaners containing solvents.

Interior Glass

To clean, use a terry cloth fabric dampened with water. Wipe droplets left behind with a clean dry cloth. Commercial glass cleaners may be used, if necessary, after cleaning the interior glass with plain water.

⚠ Caution

To prevent scratching, never use abrasive cleaners on automotive glass. Abrasive cleaners or aggressive cleaning may damage the rear window defogger.

Cleaning the windshield with water during the first three to six months of ownership will reduce tendency to fog.

Speaker Covers

Vacuum around a speaker cover gently, so that the speaker will not be damaged. Clean spots with just water and mild soap.

Coated Moldings

Coated moldings should be cleaned.

- When lightly soiled, wipe with a sponge or soft lint-free cloth dampened with water.
- When heavily soiled, use warm soapy water.

Fabric/Carpet/Suede

Start by vacuuming the surface using a soft brush attachment. If a rotating brush attachment is being used during vacuuming, only use it on the floor carpet. Before cleaning, gently remove as much of the soil as possible using one of the following techniques:

- Gently blot liquids with a paper towel. Continue blotting until no more soil can be removed.
- For solid soils, remove as much as possible prior to vacuuming.

To clean:

1. Saturate a clean lint-free colorfast cloth with water. Microfiber cloth is recommended to prevent lint transfer to the fabric or carpet.
2. Remove excess moisture by gently wringing until water does not drip from the cleaning cloth.
3. Start on the outside edge of the soil and gently rub toward the center. Fold the cleaning cloth to a clean area frequently to prevent forcing the soil in to the fabric.
4. Continue gently rubbing the soiled area until there is no longer any color transfer from the soil to the cleaning cloth.
5. If the soil is not completely removed, use a mild soap solution followed only by plain water.

If the soil is not completely removed, it may be necessary to use a commercial upholstery cleaner or spot lifter. Test a small hidden area for colorfastness before using a commercial upholstery cleaner or spot lifter. If ring formation occurs, clean the entire fabric or carpet.

Following the cleaning process, a paper towel can be used to blot excess moisture.

Cleaning High Gloss Surfaces and Vehicle Information and Radio Displays

For vehicles with high gloss surfaces or vehicle displays, use a microfiber cloth to wipe surfaces. Before wiping the surface with the microfiber cloth, use a soft bristle brush to remove dirt that could scratch the surface. Then use the microfiber cloth by gently rubbing to clean. Never use window cleaners or solvents. Periodically hand wash the microfiber cloth separately, using mild soap. Do not use bleach or fabric softener. Rinse thoroughly and air dry before next use.

⚠ Caution

Do not attach a device with a suction cup to the display. This may cause damage and would not be covered by the warranty.

Instrument Panel, Leather, Vinyl, Other Plastic Surfaces, Low Gloss Paint Surfaces and Natural Open Pore Wood Surfaces

Use a soft microfiber cloth dampened with water to remove dust and loose dirt. For a more thorough cleaning, use a soft microfiber cloth dampened with a mild soap solution.

⚠ Caution

Soaking or saturating leather, especially perforated leather, as well as other interior surfaces, may cause permanent damage. Wipe excess moisture from these surfaces after cleaning and allow them to dry naturally. Never use heat, steam, spot lifters, or spot removers. Do not use cleaners that contain silicone or wax-based products. Cleaners containing

(Continued)

Caution (Continued)

these solvents can permanently change the appearance and feel of leather or soft trim and are not recommended.

Do not use cleaners that increase gloss, especially on the instrument panel. Reflected glare can decrease visibility through the windshield under certain conditions.

⚠ Caution

Use of air fresheners may cause permanent damage to plastics and painted surfaces. If an air freshener comes in contact with any plastic or painted surface in the vehicle, blot immediately and clean with a soft cloth dampened with a mild soap solution.
Damage caused by air fresheners would not be covered by the vehicle warranty.

Cargo Cover and Convenience Net

Wash with warm water and mild detergent. Do not use chlorine bleach. Rinse with cold water, and then dry completely.

Care of Safety Belts

Keep belts clean and dry.

⚠ Warning

Do not bleach or dye safety belts. It may severely weaken them. In a crash, they might not be able to provide adequate protection. Clean safety belts only with mild soap and lukewarm water.

Floor Mats

⚠ Warning

If a floor mat is the wrong size or is not properly installed, it can interfere with the pedals. Interference with the pedals can cause unintended acceleration and/or increased stopping distance which can cause a crash and injury. Make sure the floor mat does not interfere with the pedals.

Vehicles equipped with SEO 6A3 rubber mats, do not have floor mats and should not have floor mats added.

Use the following guidelines for proper floor mat usage, if equipped:

- The original equipment floor mats were designed for your vehicle. If the floor mats need replacing, it is recommended that GM certified floor mats be purchased. Non-GM floor mats may not fit properly and may interfere with the pedals. Always check that the floor mats do not interfere with the pedals.
- Use the floor mat with the correct side up. Do not turn it over.
- Do not place anything on top of the driver side floor mat.
- Use only a single floor mat on the driver side.
- Do not place one floor mat on top of another.

Removing and Replacing the Floor Mats

Pull up on the rear of the floor mat to unlock each retainer and remove.

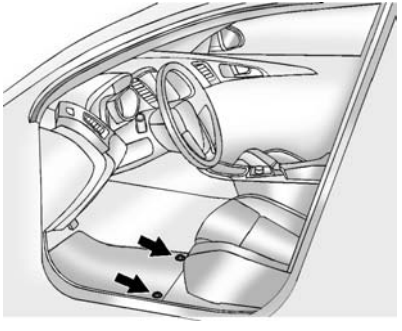

Reinstall by lining up the floor mat retainer openings over the carpet retainers and snap into position.

Make sure the floor mat is properly secured in place.

Verify the floor mat does not interfere with the pedals.

Service and Maintenance

General Information
General Information 11-1

Maintenance Schedule
Maintenance Schedule 11-2

Special Application Services
Special Application Services 11-6

Additional Maintenance and Care
Additional Maintenance and Care 11-6

Recommended Fluids
Recommended Fluids and Lubricants 11-9
Maintenance Replacement Parts 11-10

Maintenance Records
Maintenance Records 11-11

General Information

Your vehicle is an important investment. This section describes the required maintenance for the vehicle. Follow this schedule to help protect against major repair expenses resulting from neglect or inadequate maintenance. It may also help to maintain the value of the vehicle if it is sold. It is the responsibility of the owner to have all required maintenance performed.

Your dealer has trained technicians who can perform required maintenance using genuine replacement parts. They have up-to-date tools and equipment for fast and accurate diagnostics. Many dealers have extended evening and Saturday hours, courtesy transportation, and online scheduling to assist with service needs.

Your dealer recognizes the importance of providing competitively priced maintenance and repair services. With trained technicians, the dealer is the place for routine maintenance such as oil changes and tire rotations and additional maintenance items like tires, brakes, batteries, and wiper blades.

⚠ Caution

Damage caused by improper maintenance can lead to costly repairs and may not be covered by the vehicle warranty. Maintenance intervals, checks, inspections, recommended fluids, and lubricants are important to keep the vehicle in good working condition.

The Tire Rotation and Required Services are the responsibility of the vehicle owner. It is recommended to have your dealer perform these services every 12 000 km/7,500 mi. Proper vehicle maintenance helps to keep the vehicle in good working condition, improves fuel economy, and reduces vehicle emissions.

Because of the way people use vehicles, maintenance needs vary. There may need to be more frequent checks and services. Normal vehicle maintenance is for vehicles that:

- Carry passengers and cargo within recommended limits on the Tire and Loading Information label. See *Vehicle Load Limits on page 9-9*.
- Are driven on reasonable road surfaces within legal driving limits.
- Use the recommended fuel. See *Recommended Fuel on page 9-30*.

The Additional Required Services - Severe are for vehicles that are:

- Mainly driven in heavy city traffic in hot weather.
- Mainly driven in hilly or mountainous terrain.
- Frequently towing a trailer.
- Used for high speed or competitive driving.
- Used for taxi, police, or delivery service.

Refer to the information in the Maintenance Schedule Additional Required Services - Severe chart.

⚠ Warning

Performing maintenance work can be dangerous and can cause serious injury. Perform maintenance work only if the required information, proper tools, and equipment are available.
If they are not, see your dealer to have a trained technician do the work. See *Doing Your Own Service Work on page 10-3*.

Maintenance Schedule

Owner Checks and Services

At Each Fuel Stop

- Check the engine oil level. See *Engine Oil on page 10-8*.

Once a Month

- Check the tire inflation pressures. See *Tire Pressure on page 10-48*.
- Inspect the tires for wear. See *Tire Inspection on page 10-53*.
- Check the windshield washer fluid level. See *Washer Fluid on page 10-20*.

Engine Oil Change

When the CHANGE ENGINE OIL SOON message displays, have the engine oil and filter changed within the next 1 000 km/600 mi. If driven under the best conditions, the engine oil life system might not indicate the need for vehicle service for more than a year. The engine oil and filter must be changed at least once a year and the oil life system must be reset. Your trained dealer technician can perform this work. If the engine oil life system is reset accidentally, service the vehicle within 5 000 km/3,000 mi since the last service. Reset the oil life system when the oil is changed. See *Engine Oil Life System on page 10-11*.

Tire Rotation and Required Services Every 12 000 km/ 7,500 mi

Rotate the tires, if recommended for the vehicle, and perform the following services. See *Tire Rotation on page 10-54*.

- Check engine oil level and oil life percentage. If needed, change engine oil and filter, and reset oil life system. See *Engine Oil on page 10-8* and *Engine Oil Life System on page 10-11*.
- Check engine coolant level. See *Engine Coolant on page 10-14*.
- Check windshield washer fluid level. See *Washer Fluid on page 10-20*.
- Visually inspect windshield wiper blades for wear, cracking, or contamination. See *Exterior Care on page 10-73*. Replace worn or damaged wiper blades. See *Wiper Blade Replacement on page 10-25*.
- Check tire inflation pressures. See *Tire Pressure on page 10-48*.
- Check spare wheel retainer. If loose, tighten with a torque wrench to 4.5 +/− 0.5 N•m
- Inspect tire wear. See *Tire Inspection on page 10-53*.
- Visually check for fluid leaks.
- Inspect engine air cleaner filter. See *Engine Air Cleaner/Filter on page 10-12*.

- Inspect brake system.
- Visually inspect steering, suspension, and chassis components for damaged, loose, or missing parts or signs of wear. See *Exterior Care on page 10-73*.
- Check restraint system components. See *Safety System Check on page 3-10*.
- Visually inspect fuel system for damage or leaks.
- Visually inspect exhaust system and nearby heat shields for loose or damaged parts.
- Lubricate body components. See *Exterior Care on page 10-73*.
- Check starter switch. See *Starter Switch Check on page 10-24*.
- Check automatic transmission shift lock control function. See *Automatic Transmission Shift Lock Control Function Check on page 10-24*.
- Check ignition transmission lock. See *Ignition Transmission Lock Check on page 10-25*.
- Check parking brake and automatic transmission park mechanism. See *Park Brake and P (Park) Mechanism Check on page 10-25*.
- Check accelerator pedal for damage, high effort, or binding. Replace if needed.
- Visually inspect gas strut for signs of wear, cracks, or other damage. Check the hold open ability of the strut. See your dealer if service is required.

Maintenance Schedule Additional Required Services - Severe	12 000 km/7,500 mi	24 000 km/15,000 mi	36 000 km/22,500 mi	48 000 km/30,000 mi	60 000 km/37,500 mi	72 000 km/45,000 mi	84 000 km/52,500 mi	96 000 km/60,000 mi	108 000 km/67,500 mi	120 000 km/75,000 mi	132 000 km/82,500 mi	144 000 km/90,000 mi	156 000 km/97,500 mi	168 000 km/105,000 mi	180 000 km/112,500 mi	192 000 km/120,000 mi	204 000 km/127,500 mi	216 000 km/135,000 mi	228 000 km/142,500 mi	240 000 km/150,000 mi
Rotate tires and perform Required Services. Check engine oil level and oil life percentage. Change engine oil and filter, if needed.	✓	✓	✓	✓	✓	✓	✓	✓	✓	✓	✓	✓	✓	✓	✓	✓	✓	✓	✓	✓
Replace passenger compartment air filter. (1)			✓			✓			✓			✓			✓			✓		
Inspect evaporative control system. (2)						✓						✓						✓		
Replace engine air cleaner filter. (3)						✓						✓						✓		
Change automatic transmission fluid. Change filter if serviceable.						✓						✓						✓		
Replace spark plugs. Inspect spark plug wires.													✓							
Drain and fill engine cooling system. (4)																				✓
Visually inspect accessory drive belts. (5)																				✓
Replace rear axle fluid.						✓						✓						✓		
Replace brake fluid. (6)				✓				✓				✓				✓				✓

Footnotes — Maintenance Schedule Additional Required Services - Severe

(1) Or every two years, whichever comes first. More frequent replacement may be needed if the vehicle is driven in areas with heavy traffic, areas with poor air quality, or areas with high dust levels. Replacement may also be needed if there is a reduction in air flow, excessive window fogging, or odors.

(2) Check all fuel and vapor lines and hoses for proper hook-up, routing, and condition.

(3) Or every four years, whichever comes first.

(4) Or every five years, whichever comes first. See *Cooling System on page 10-13*.

(5) Or every 10 years, whichever comes first. Inspect for fraying, excessive cracking, or damage; replace, if needed.

(6) Or every two years, whichever comes first.

Special Application Services

- Severe Commercial Use Vehicles Only: Lubricate chassis components every 5 000 km/ 3,000 mi.
- Have underbody flushing service performed. See "Underbody Maintenance" in *Exterior Care on page 10-73*.

Additional Maintenance and Care

Your vehicle is an important investment and caring for it properly may help to avoid future costly repairs. To maintain vehicle performance, additional maintenance services may be required.

It is recommended that your dealer perform these services — their trained dealer technicians know your vehicle best. Your dealer can also perform a thorough assessment with a multi-point inspection to recommend when your vehicle may need attention.

The following list is intended to explain the services and conditions to look for that may indicate services are required.

Battery

The battery supplies power to start the engine and operate any additional electrical accessories.

- To avoid break-down or failure to start the vehicle, maintain a battery with full cranking power.
- Trained dealer technicians have the diagnostic equipment to test the battery and ensure that the connections and cables are corrosion-free.

Belts

- Belts may need replacing if they squeak or show signs of cracking or splitting.
- Trained dealer technicians have access to tools and equipment to inspect the belts and recommend adjustment or replacement when necessary.

Brakes

Brakes stop the vehicle and are crucial to safe driving.

- Signs of brake wear may include chirping, grinding, or squealing noises, or difficulty stopping.
- Trained dealer technicians have access to tools and equipment to inspect the brakes and recommend quality parts engineered for the vehicle.

Fluids

Proper fluid levels and approved fluids protect the vehicle's systems and components. See *Recommended Fluids and Lubricants on page 11-9* for GM approved fluids.

- Engine oil and windshield washer fluid levels should be checked at every fuel fill.
- Instrument cluster lights may come on to indicate that fluids may be low and need to be filled.

Hoses

Hoses transport fluids and should be regularly inspected to ensure that there are no cracks or leaks. With a multi-point inspection, your dealer can inspect the hoses and advise if replacement is needed.

Lamps

Properly working headlamps, taillamps, and brake lamps are important to see and be seen on the road.

- Signs that the headlamps need attention include dimming, failure to light, cracking, or damage. The brake lamps need to be checked periodically to ensure that they light when braking.
- With a multi-point inspection, your dealer can check the lamps and note any concerns.

Shocks and Struts

Shocks and struts help aid in control for a smoother ride.

- Signs of wear may include steering wheel vibration, bounce/sway while braking, longer stopping distance, or uneven tire wear.
- As part of the multi-point inspection, trained dealer technicians can visually inspect

the shocks and struts for signs of leaking, blown seals, or damage, and can advise when service is needed.

Tires

Tires need to be properly inflated, rotated, and balanced. Maintaining the tires can save money and fuel, and can reduce the risk of tire failure.

- Signs that the tires need to be replaced include three or more visible treadwear indicators; cord or fabric showing through the rubber; cracks or cuts in the tread or sidewall; or a bulge or split in the tire.
- Trained dealer technicians can inspect and recommend the right tires. Your dealer can also provide tire/wheel balancing services to ensure smooth vehicle operation at all speeds. Your dealer sells and services name brand tires.

Vehicle Care

To help keep the vehicle looking like new, vehicle care products are available from your dealer. For information on how to clean and protect the vehicle's interior and exterior, see *Interior Care on page 10-78* and *Exterior Care on page 10-73*.

Wheel Alignment

Wheel alignment is critical for ensuring that the tires deliver optimal wear and performance.

- Signs that the alignment may need to be adjusted include pulling, improper vehicle handling, or unusual tire wear.
- Your dealer has the required equipment to ensure proper wheel alignment.

Windshield

For safety, appearance, and the best viewing, keep the windshield clean and clear.

- Signs of damage include scratches, cracks, and chips.
- Trained dealer technicians can inspect the windshield and recommend proper replacement if needed.

Wiper Blades

Wiper blades need to be cleaned and kept in good condition to provide a clear view.

- Signs of wear include streaking, skipping across the windshield, and worn or split rubber.
- Trained dealer technicians can check the wiper blades and replace them when needed.

Recommended Fluids

Recommended Fluids and Lubricants

Usage	Fluid/Lubricant
Engine Oil	Use only engine oil licensed to the dexos1® specification of the proper SAE viscosity grade. ACDelco dexos1 Synthetic Blend is recommended. See *Engine Oil on page 10-8*.
Engine Coolant	50/50 mixture of clean, drinkable water and use only DEX-COOL Coolant. See *Engine Coolant on page 10-14*.
Hydraulic Brake System	DOT 4 Hydraulic Brake Fluid (GM Part No. 19299570).
Windshield Washer	Automotive windshield washer fluid that meets regional freeze protection requirements.
Automatic Transmission	DEXRON®-VI Automatic Transmission Fluid.
Rear Axle	Castrol SAF Carbon Modified SAE 75W/85 API GL5 Differential Oil (GM Part No. 92184900).
Key Lock Cylinders	Multi-Purpose Lubricant, Superlube (GM Part No. 12346241).
Hood Latch Assembly, Secondary Latch, Pivots, Spring Anchor, and Release Pawl	Lubriplate Lubricant Aerosol (GM Part No. 89021668) or lubricant meeting requirements of NLGI #2, Category LB or GC-LB.
Hood and Door Hinges	Multi-Purpose Lubricant, Superlube (GM Part No. 12346241).
Weatherstrip Conditioning	Weatherstrip Lubricant (GM Part No. 3634770) or Dielectric Silicone Grease (GM Part No. 12345579).

Maintenance Replacement Parts

Replacement parts identified below by name, part number, or specification can be obtained from your dealer.

Part	GM Part Numbers	ACDelco Part Numbers
Engine Air Cleaner/Filter	92066873	A3149C
Engine Oil Filter		
3.6L V6	25177917	PF2129
6.0L V8	89017524	PF48
Passenger Compartment Air Filter	92184248	CF182
Spark Plugs		
3.6L V6	12622561	41-109
6.0L V8	12621258	41-110
Wiper Blades		
Driver Side	92219233	—
Passenger Side	92219234	—

Maintenance Records

After the scheduled services are performed, record the date, odometer reading, who performed the service, and the type of services performed in the boxes provided. Retain all maintenance receipts.

Date	Odometer Reading	Serviced By	Services Performed

Date	Odometer Reading	Serviced By	Services Performed

Technical Data

Vehicle Identification
Vehicle Identification Number (VIN) 12-1
Service Parts Identification Label 12-1

Vehicle Data
Capacities and Specifications 12-2
Engine Drive Belt Routing . . . 12-4

Vehicle Identification

Vehicle Identification Number (VIN)

This legal identifier is in the front corner of the instrument panel, on the left side of the vehicle. It can be seen through the windshield from outside. The VIN also appears on the Vehicle Certification and Service Parts labels and certificates of title and registration.

Engine Identification

The eighth character in the VIN is the engine code. This code identifies the vehicle's engine, specifications, and replacement parts. See “Engine Specifications” under *Capacities and Specifications on page 12-2* for the vehicle's engine code.

Service Parts Identification Label

This label, on the rear load floor, behind the spare tire tub, has the following information:

- Vehicle Identification Number (VIN).
- Model designation.
- Paint information.
- Production options and special equipment.

Do not remove this label from the vehicle.

Vehicle Data

Capacities and Specifications

The following approximate capacities are given in English and metric conversions. Please refer to *Recommended Fluids and Lubricants on page 11-9* for more information.

Application	Capacities	
	Metric	English
Air Conditioning Refrigerant R134a	For the air conditioning system refrigerant charge amount, see the refrigerant label located under the hood. See your dealer for more information.	
Engine Cooling System		
3.6L V6	10.2 L	10.8 qt
6.0L V8	10.4 L	11 qt
Engine Oil with Filter		
3.6L V6	6.7 L	7.0 qt
6.0L V8	7.6 L	8.0 qt
Fuel Tank	71 L	18.8 gal
Rear Axle Fluid	1.25 L	1.3 qt

Application	Capacities	
	Metric	English
Transmission Fluid (Pan Removal and Filter Replacement)**		
3.6L V6	11.3 L	11.9 qt
6.0L V8	6.3 L	6.7 qt
Wheel Nut Torque	190 N•m	140 lb ft
**See *Automatic Transmission Fluid on page 10-12* for information on checking fluid level.		
All capacities are approximate. When adding, be sure to fill to the approximate level, as recommended in this manual. Recheck fluid level after filling.		

Engine Specifications

Engine	VIN Code	Transmission	Spark Plug Gap
3.6L V6 (LFX)	3	Automatic	0.95–1.10 mm (0.037–0.040 in)
6.0L V8 (L77)	2	Automatic	0.95–1.10 mm (0.037–0.040 in)

Engine Drive Belt Routing

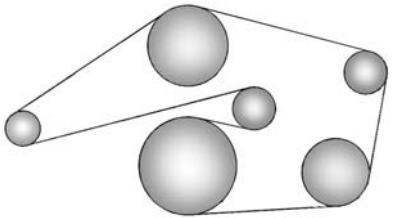

3.6L V6 Engine

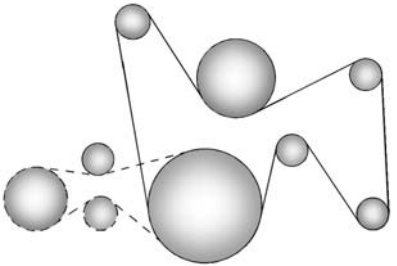

6.0L V8 Engine

Customer Information

Customer Information
Customer Satisfaction Procedure 13-1
Customer Assistance Offices 13-3
Customer Assistance for Text Telephone (TTY) Users 13-4
GM Mobility Reimbursement Program 13-4
Roadside Assistance Program 13-4
Scheduling Service Appointments 13-6
Collision Damage Repair 13-6
Service Publications Ordering Information 13-9

Reporting Safety Defects
Reporting Safety Defects to the United States Government 13-10
Reporting Safety Defects to the Canadian Government 13-10
Reporting Safety Defects to General Motors 13-11

Vehicle Data Recording and Privacy
Vehicle Data Recording and Privacy 13-11
Event Data Recorders 13-11
Radio Frequency Identification (RFID) 13-12
Radio Frequency Statement 13-12

Customer Information

Customer Satisfaction Procedure

Your satisfaction and goodwill are important to your dealer and to Chevrolet. Normally, any concerns with the sales transaction or the operation of the vehicle will be resolved by your dealer's sales or service departments. Sometimes, however, despite the best intentions of all concerned, misunderstandings can occur. If your concern has not been resolved to your satisfaction, the following steps should be taken:

STEP ONE: Discuss your concern with a member of dealership management. Normally, concerns can be quickly resolved at that level. If the matter has already been reviewed with the sales, service, or parts manager, contact the owner of your dealership or the general manager.

STEP TWO: If after contacting a member of dealership management, it appears your concern cannot be resolved by your dealership without further help, in the U.S., call the Chevrolet Customer Assistance Center at 1-800-222-1020. In Canada, call General Motors of Canada Customer Care Centre at 1-800-263-3777 (English), or 1-800-263-7854 (French).

We encourage you to call the toll-free number in order to give your inquiry prompt attention. Have the following information available to give the Customer Assistance representative:

- Vehicle Identification Number (VIN). This is available from the vehicle registration or title, or the plate at the top left of the instrument panel and visible through the windshield.
- Dealership name and location.
- Vehicle delivery date and present mileage.

When contacting Chevrolet, remember that your concern will likely be resolved at a dealer's facility. That is why we suggest following Step One first.

STEP THREE — U.S. Owners: Both General Motors and your dealer are committed to making sure you are completely satisfied with your new vehicle. However, if you continue to remain unsatisfied after following the procedure outlined in Steps One and Two, you can file with the Better Business Bureau (BBB) Auto Line® Program to enforce your rights.

The BBB Auto Line Program is an out-of-court program administered by the Council of Better Business Bureaus to settle automotive disputes regarding vehicle repairs or the interpretation of the New Vehicle Limited Warranty. Although you may be required to resort to this informal dispute resolution program prior to filing a court action, use of the program is free of charge and your case will generally be heard within 40 days. If you do not agree with the decision given in your case, you may reject it and proceed with any other venue for relief available to you.

You may contact the BBB Auto Line Program using the toll-free telephone number or write them at the following address:

BBB Auto Line Program
Council of Better Business Bureaus, Inc.
4200 Wilson Boulevard
Suite 800
Arlington, VA 22203-1838

Telephone: 1-800-955-5100
www.dr.bbb.org/goauto

This program is available in all 50 states and the District of Columbia. Eligibility is limited by vehicle age, mileage, and other factors. General Motors reserves the right to change eligibility limitations and/or discontinue its participation in this program.

STEP THREE — Canadian Owners: In the event that you do not feel your concerns have been addressed after following the procedure outlined in Steps One and Two, General Motors of Canada Limited wants you to be aware of its participation in a no-charge Mediation/Arbitration Program. General Motors of Canada Limited has committed to binding arbitration of owner disputes involving factory-related vehicle service claims. The program provides for the review of the facts involved by an impartial third party arbiter, and may include an informal hearing before the arbiter. The program is designed so that the entire dispute settlement process, from the time you file your complaint to the final decision, should be completed in about 70 days. We believe our impartial program offers advantages over courts in most jurisdictions because it is informal, quick, and free of charge.

For further information concerning eligibility in the Canadian Motor Vehicle Arbitration Plan (CAMVAP), call toll-free 1-800-207-0685, or call the General Motors Customer Care Centre, 1-800-263-3777 (English), 1-800-263-7854 (French), or write to:

The Mediation/Arbitration Program
c/o Customer Care Centre
General Motors of Canada Limited
Mail Code: CA1-163-005
1908 Colonel Sam Drive
Oshawa, Ontario L1H 8P7

Your inquiry should be accompanied by the Vehicle Identification Number (VIN).

Customer Assistance Offices

Chevrolet encourages customers to call the toll-free number for assistance. However, if a customer wishes to write or e-mail Chevrolet, the letter should be addressed to:

United States and Puerto Rico

Chevrolet Motor Division
Chevrolet Customer Assistance Center
P.O. Box 33170
Detroit, MI 48232-5170
www.Chevrolet.com

1-800-222-1020
1-800-833-2438 (For Text Telephone Devices (TTYs))
Roadside Assistance:
1-800-243-8872

From U.S. Virgin Islands:

1-800-496-9994

Canada

General Motors of Canada Limited
Customer Care Centre, Mail Code: CA1-163-005
1908 Colonel Sam Drive
Oshawa, Ontario L1H 8P7
www.gm.ca

1-800-263-3777 (English)
1-800-263-7854 (French)
1-800-263-3830 (For Text Telephone devices (TTYs))
Roadside Assistance:
1-800-268-6800

Overseas

Please contact the local General Motors Business Unit.

Customer Assistance for Text Telephone (TTY) Users

To assist customers who are deaf, hard of hearing, or speech-impaired and who use Text Telephones (TTYs), Chevrolet has TTY equipment available at its Customer Assistance Center. Any TTY user in the U.S. can communicate with Chevrolet by dialing: 1-800-833-2438. TTY users in Canada can dial 1-800-263-3830.

GM Mobility Reimbursement Program

This program is available to qualified applicants for cost reimbursement of eligible aftermarket adaptive equipment required for the vehicle, such as hand controls or a wheelchair/scooter lift for the vehicle.

For more information on the limited offer, visit www.gmmobility.com or call the GM Mobility Assistance Center at 1-800-323-9935. Text Telephone (TTY) users, call 1-800-833-9935.

General Motors of Canada also has a Mobility Program. Visit www.gm.ca or call 1-800-GM-DRIVE (463-7483) for details. TTY users call 1-800-263-3830.

Roadside Assistance Program

For U.S.-purchased vehicles, call 1-800-243-8872; (Text Telephone (TTY): 1-888-889-2438).

For Canadian-purchased vehicles, call 1-800-268-6800.

Service is available 24 hours a day, 365 days a year.

Calling for Assistance

When calling Roadside Assistance, have the following information ready:

- Your name, home address, and home telephone number.

- Telephone number of your location.
- Location of the vehicle.
- Model, year, color, and license plate number of the vehicle.
- Odometer reading, Vehicle Identification Number (VIN), and delivery date of the vehicle.
- Description of the problem.

Coverage

Services are provided up to 5 years/ 160 000 km (100,000 mi), whichever comes first.

In the U.S., anyone driving the vehicle is covered. In Canada, a person driving the vehicle without permission from the owner is not covered.

Roadside Assistance is not a part of the New Vehicle Limited Warranty. Chevrolet and General Motors of Canada Limited reserve the right to make any changes or discontinue the Roadside Assistance program at any time without notification.

Chevrolet and General Motors of Canada Limited reserve the right to limit services or payment to an owner or driver if they decide the claims are made too often, or the same type of claim is made many times.

Services Provided

- **Emergency Fuel Delivery:** Delivery of enough fuel for the vehicle to get to the nearest service station.
- **Lock-Out Service:** Service to unlock the vehicle if you are locked out. A remote unlock may be available if you have OnStar. For security reasons, the driver must present identification before this service is given.
- **Emergency Tow from a Public Road or Highway:** Tow to the nearest Chevrolet dealer for warranty service, or if the vehicle was in a crash and cannot be driven. Assistance is also given when the vehicle is stuck in the sand, mud, or snow.
- **Flat Tire Change:** Service to change a flat tire with the spare tire. The spare tire, if equipped, must be in good condition and properly inflated. It is the owner's responsibility for the repair or replacement of the tire if it is not covered by the warranty.
- **Battery Jump Start:** Service to jump start a dead battery.

Services Not Included in Roadside Assistance

- Impound towing caused by violation of any laws.
- Legal fines.
- Mounting, dismounting, or changing of snow tires, chains, or other traction devices.
- Towing or services for vehicles driven on a non-public road or highway.

Services Specific to Canadian-Purchased Vehicles

- **Fuel Delivery:** Reimbursement is approximately $5 Canadian. Diesel fuel delivery may be restricted. Propane and other fuels are not provided through this service.
- **Lock-Out Service:** Vehicle registration is required.
- **Trip Interruption Benefits and Assistance:** Must be over 250 kilometers from where your trip was started to qualify. General Motors of Canada Limited requires pre-authorization, original detailed receipts, and a copy of the repair orders. Once authorization has been received, the Roadside Assistance advisor will help to make arrangements and explain how to receive payment.
- **Alternative Service:** If assistance cannot be provided right away, the Roadside Assistance advisor may give permission to get local emergency road service. You will receive payment, up to $100, after sending the original receipt to Roadside Assistance. Mechanical failures may be covered, however any cost for parts and labor for repairs not covered by the warranty are the owner responsibility.

Scheduling Service Appointments

When the vehicle requires warranty service, contact your dealer and request an appointment. By scheduling a service appointment and advising the service consultant of your transportation needs, your dealer can help minimize your inconvenience.

If the vehicle cannot be scheduled into the service department immediately, keep driving it until it can be scheduled for service, unless, of course, the problem is safety related. If it is, please call your dealership, let them know this, and ask for instructions.

If your dealer requests you to bring the vehicle for service, you are urged to do so as early in the work day as possible to allow for same-day repair.

Collision Damage Repair

If the vehicle is involved in a collision and it is damaged, have the damage repaired by a qualified technician using the proper equipment and quality replacement parts. Poorly performed collision repairs diminish the vehicle resale value, and safety performance can be compromised in subsequent collisions.

Collision Parts

Genuine GM Collision parts are new parts made with the same materials and construction methods as the parts with which the vehicle was originally built. Genuine GM

Collision parts are the best choice to ensure that the vehicle's designed appearance, durability, and safety are preserved. The use of Genuine GM parts can help maintain the GM New Vehicle Limited Warranty.

Recycled original equipment parts may also be used for repair. These parts are typically removed from vehicles that were total losses in prior crashes. In most cases, the parts being recycled are from undamaged sections of the vehicle. A recycled original equipment GM part may be an acceptable choice to maintain the vehicle's originally designed appearance and safety performance; however, the history of these parts is not known. Such parts are not covered by the GM New Vehicle Limited Warranty, and any related failures are not covered by that warranty.

Aftermarket collision parts are also available. These are made by companies other than GM and may not have been tested for the vehicle. As a result, these parts may fit poorly, exhibit premature durability/corrosion problems, and may not perform properly in subsequent collisions. Aftermarket parts are not covered by the GM New Vehicle Limited Warranty, and any vehicle failure related to such parts is not covered by that warranty.

Repair Facility

GM also recommends that you choose a collision repair facility that meets your needs before you ever need collision repairs. Your dealer may have a collision repair center with GM-trained technicians and state-of-the-art equipment, or be able to recommend a collision repair center that has GM-trained technicians and comparable equipment.

Insuring the Vehicle

Protect your investment in the GM vehicle with comprehensive and collision insurance coverage. There are significant differences in the quality of coverage afforded by various insurance policy terms. Many insurance policies provide reduced protection to the GM vehicle by limiting compensation for damage repairs through the use of aftermarket collision parts. Some insurance companies will not specify aftermarket collision parts. When purchasing insurance, we recommend that you ensure that the vehicle will be repaired with GM original equipment collision parts. If such insurance coverage is not available from your current insurance carrier, consider switching to another insurance carrier.

If the vehicle is leased, the leasing company may require you to have insurance that ensures repairs with Genuine GM Original Equipment Manufacturer (OEM) parts or Genuine Manufacturer replacement parts. Read the lease carefully, as you may be charged at the end of the lease for poor quality repairs.

If a Crash Occurs

If there has been an injury, call emergency services for help. Do not leave the scene of a crash until all matters have been taken care of. Move the vehicle only if its position puts you in danger, or you are instructed to move it by a police officer.

Give only the necessary information to police and other parties involved in the crash.

For emergency towing see *Roadside Assistance Program on page 13-4*.

Gather the following information:

- Driver name, address, and telephone number.
- Driver license number.
- Owner name, address, and telephone number.
- Vehicle license plate number.
- Vehicle make, model, and model year.
- Vehicle Identification Number (VIN).
- Insurance company and policy number.
- General description of the damage to the other vehicle.

Choose a reputable repair facility that uses quality replacement parts. See “Collision Parts” earlier in this section.

If the airbag has inflated, see *What Will You See after an Airbag Inflates? on page 3-17*.

Managing the Vehicle Damage Repair Process

In the event that the vehicle requires damage repairs, GM recommends that you take an active role in its repair. If you have a pre-determined repair facility of choice, take the vehicle there, or have it towed there. Specify to the facility that any required replacement collision parts be original equipment parts, either new Genuine GM parts or recycled original GM parts. Remember, recycled parts will not be covered by the GM vehicle warranty.

Insurance pays the bill for the repair, but you must live with the repair. Depending on your policy limits, your insurance company may initially value the repair using aftermarket parts. Discuss this with the repair professional, and insist on Genuine GM parts. Remember, if the vehicle is leased, you may be obligated to have the vehicle repaired with Genuine GM parts, even if your insurance coverage does not pay the full cost.

If another party's insurance company is paying for the repairs, you are not obligated to accept a repair valuation based on that insurance company's collision policy repair limits, as you have no contractual limits with that company. In such cases, you can have control of the repair and parts choices as long as the cost stays within reasonable limits.

Service Publications Ordering Information

Service Manuals

Service Manuals have the diagnosis and repair information on the engines, transmission, axle, suspension, brakes, electrical, steering, body, etc.

Service Bulletins

Service Bulletins give additional technical service information needed to knowledgeably service General Motors cars and trucks. Each bulletin contains instructions to assist in the diagnosis and service of the vehicle.

Owner Information

Owner publications are written specifically for owners and intended to provide basic operational information about the vehicle. The Owner Manual includes the Maintenance Schedule for all models.

In-Portfolio: Includes a Portfolio, Owner Manual, and Warranty Manual.

RETAIL SELL PRICE:
$35.00 (U.S.) plus handling and shipping fees.

Without Portfolio: Owner Manual only.

RETAIL SELL PRICE:
$25.00 (U.S.) plus handling and shipping fees.

Current and Past Models

Technical Service Bulletins and Manuals are available for current and past model GM vehicles.

ORDER TOLL FREE:
1-800-551-4123 Monday – Friday 8:00 AM – 6:00 PM Eastern Time

For Credit Card Orders Only (VISA-MasterCard-Discover), see Helm, Inc. at: www.helminc.com.

Or write to:

Helm, Incorporated
Attention: Customer Service
47911 Halyard Drive
Plymouth, MI 48170

Prices are subject to change without notice and without incurring obligation. Allow ample time for delivery.

All listed prices are quoted in U.S. funds. Make checks payable in U.S. funds.

Reporting Safety Defects

Reporting Safety Defects to the United States Government

If you believe that your vehicle has a defect which could cause a crash or could cause injury or death, you should immediately inform the National Highway Traffic Safety Administration (NHTSA) in addition to notifying General Motors.

If NHTSA receives similar complaints, it may open an investigation, and if it finds that a safety defect exists in a group of vehicles, it may order a recall and remedy campaign. However, NHTSA cannot become involved in individual problems between you, your dealer, or General Motors.

To contact NHTSA, you may call the Vehicle Safety Hotline toll-free at 1-888-327-4236 (TTY: 1-800-424-9153); go to *http://www.safercar.gov;* or write to:

Administrator, NHTSA
1200 New Jersey Avenue, S.E.
Washington, D.C. 20590

You can also obtain other information about motor vehicle safety from *http://www.safercar.gov.*

Reporting Safety Defects to the Canadian Government

If you live in Canada, and you believe that the vehicle has a safety defect, notify Transport Canada immediately, and notify General Motors of Canada Limited. Call Transport Canada at 1-800-333-0510 or write to:

Transport Canada
Road Safety Branch
80 rue Noel
Gatineau, QC J8Z 0A1

Reporting Safety Defects to General Motors

In addition to notifying NHTSA (or Transport Canada) in a situation like this, notify General Motors.

Call 1-800-222-1020, or write:

Chevrolet Motor Division
Chevrolet Customer Assistance Center
P.O. Box 33170
Detroit, MI 48232-5170

In Canada, call 1-800-263-3777 (English) or 1-800-263-7854 (French), or write:

General Motors of Canada Limited
Customer Care Centre, Mail Code: CA1-163-005
1908 Colonel Sam Drive
Oshawa, Ontario L1H 8P7

Vehicle Data Recording and Privacy

The vehicle has a number of computers that record information about the vehicle's performance and how it is driven. For example, the vehicle uses computer modules to monitor and control engine and transmission performance, to monitor the conditions for airbag deployment and deploy them in a crash, and, if equipped, to provide antilock braking to help the driver control the vehicle. These modules may store data to help the dealer technician service the vehicle. Some modules may also store data about how the vehicle is operated, such as rate of fuel consumption or average speed. These modules may retain personal preferences, such as radio presets, seat positions, and temperature settings.

Event Data Recorders

This vehicle is equipped with an event data recorder (EDR). The main purpose of an EDR is to record, in certain crash or near crash-like situations, such as an air bag deployment or hitting a road obstacle, data that will assist in understanding how a vehicle's systems performed. The EDR is designed to record data related to vehicle dynamics and safety systems for a short period of time, typically 30 seconds or less. The EDR in this vehicle is designed to record such data as:

- How various systems in your vehicle were operating;
- Whether or not the driver and passenger safety belts were buckled/fastened;
- How far (if at all) the driver was depressing the accelerator and/or brake pedal; and,
- How fast the vehicle was traveling.

These data can help provide a better understanding of the circumstances in which crashes and injuries occur. NOTE: EDR data are recorded by your vehicle only if a non-trivial crash situation occurs; no data are recorded by the EDR under normal driving conditions and no personal data (e.g., name, gender, age, and crash location) are recorded. However, other parties, such as law enforcement, could combine the EDR data with the type of personally identifying data routinely acquired during a crash investigation.

To read data recorded by an EDR, special equipment is required, and access to the vehicle or the EDR is needed. In addition to the vehicle manufacturer, other parties, such as law enforcement, that have the special equipment, can read the information if they have access to the vehicle or the EDR.

GM will not access this data or share it with others except: with the consent of the vehicle owner or, if the vehicle is leased, with the consent of the lessee; in response to an official request by police or similar government office; as part of GM's defense of litigation through the discovery process; or, as required by law. Data that GM collects or receives may also be used for GM research needs or may be made available to others for research purposes, where a need is shown and the data is not tied to a specific vehicle or vehicle owner.

Radio Frequency Identification (RFID)

RFID technology is used in some vehicles for functions such as tire pressure monitoring and ignition system security, as well as in connection with conveniences such as Remote Keyless Entry (RKE) transmitters for remote door locking/unlocking and starting, and in-vehicle transmitters for garage door openers. RFID technology in GM vehicles does not use or record personal information or link with any other GM system containing personal information.

Radio Frequency Statement

This vehicle has systems that operate on a radio frequency that comply with Part 15 of the Federal Communications Commission (FCC) rules and with Industry Canada Standards RSS-GEN/210/220/310.

Operation is subject to the following two conditions:

1. The device may not cause harmful interference.
2. The device must accept any interference received, including interference that may cause undesired operation of the device.

Changes or modifications to any of these systems by other than an authorized service facility could void authorization to use this equipment.

Special Equipment Options

SEO Standard Options
SEO Standard Options - Police Package and Special Service Package 15-1
Engine Oil Cooling System 15-2
Wiring Provisions for 12-Volt Battery Power Supply 15-3

SEO Available Options
SEO Available Options - Police Package and Special Service Package 15-6
Auxiliary Battery (SEO K5S) 15-7
Auxiliary Dome Lamp - SEO 6C7 15-8
Exterior Lamp Emergency Flashing System - SEO 6J7 15-8
Rear Windows Inoperative - SEO 6N5 15-9
Inoperative Rear Door Locks and Handles - SEO 6N6 15-9
Spotlamp - SEO 7X6 (Left Spotlamp) 15-9
Spotlamps - SEO 7X7 (Left and Right Spotlamps) 15-11
Wiring Provisions for Vehicle Grille Lamps and Speaker/ Siren - SEO 6J3 15-13
Spotlamp Provisions - SEO 7X8 15-13
Spotlamp Provisions - SEO 7X9 15-13
Hole in Roof - SEO 6B7 15-13
Hole in Roof - SEO 6J5 15-14
Trunk Lid Warning Lamps - SEO T53 15-14
Wiring Provisions for Horn/ Siren Circuit - SEO 6J4 . . . 15-14
Common Keys - SEO 6E3 and 6E4 15-15
Keys and Keyless Entry Transmitters - Package of Six - SEO AMF 15-15
Delete Daytime Running Lamps and Auto Headlamps - SEO VVS . . . 15-15
Vehicle Speed Limiter - SEO SGT 15-15

SEO Standard Options

SEO Standard Options - Police Package and Special Service Package

⚠ Caution

GM cannot be responsible for any changes made to the vehicle. Have all electrical and body modifications performed by experienced technicians.

- Be sure that any modified or added wiring will work properly with your vehicle's wiring system.
- See that all wiring is properly protected by fuses, and not causing an overload to connectors and components.

(Continued)

Caution (Continued)

- Do not route wiring in areas of the vehicle where temperatures can be high or where wiring may be cut, pinched, or rubbed.
- See that all added wiring is of the same or larger gauge than the wire it is being attached to for proper fuse protection.
- Be sure that all holes drilled in the body are properly sealed and corrosion protected. See that the vehicle's wiring harnesses, piping, and other components have not been displaced or damaged during customer installations of equipment and wiring.

(Continued)

Caution (Continued)

- Do not route wiring or equipment which could interfere with roof-mounted side impact airbags. See *Airbag Deployment Diagrams on page 3-22*.

⚠ Caution

Overloading the vehicle's electrical system may damage your vehicle's accessories. Do not overload the vehicle's system by having unnecessary accessories on at the same time.

Engine Oil Cooling System

Transmission Cooler

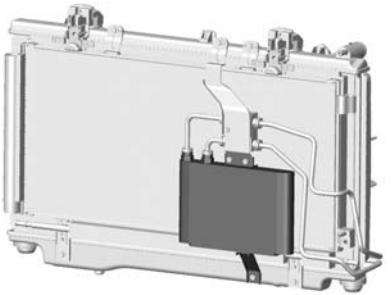

The transmission cooler is mounted in front of the radiator.

Engine Oil Cooler

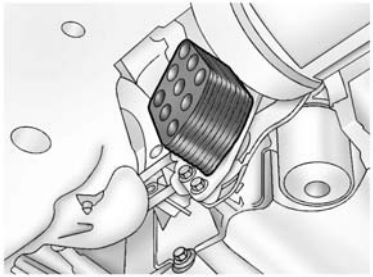

Vehicles with the 6.0L V8 engine include an engine oil cooler. The oil-to-coolant oil cooler is mounted on the lower left side of the engine, forward of the oil filter.

Wiring Provisions for 12-Volt Battery Power Supply

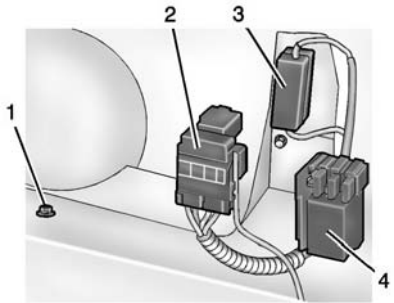

1. Ground stud
2. Prefuse assembly
3. Auxiliary power junction block
4. Right side rear compartment relay center

An 8 mm ground stud (1) is located in the trunk on the passenger side of the vehicle.

The auxiliary power junction block (3) is split to provide two circuits and can be used to connect customer-furnished equipment directly to the battery through 6.0 mm² (10 gauge) auxiliary battery module wiring and two 60 amp prefuse assembly (2) fusible links. A maximum of 100 amps (1200 watts) can be connected.

Police relay outputs and control circuit connections are located at the front of the slotted equipment mounting plate between the front seats in a coiled branch of the body harness and the circuits are terminated in two connectors. Battery power is supplied through two prefuse assembly (2) fusible links, one 100 amp and one 50 amp, to three circuit breakers and two control relays located in the right side rear compartment relay center (4). A 50 amp circuit breaker feeds power directly from the 100 amp fusible link through a 6.0 mm² (10 gauge) wire. Two 30 amp circuit breakers supply

power from the 50 amp and 100 amp fusible links through the contacts of the control relays to 3.0 mm² (12 gauge) wires.

Each relay is operated by applying 12 volts to the 1.0 mm² (16 gauge), brown or blue/yellow leads terminated in the 6–cavity connector at the front of the mounting plate. 12 volt battery power is terminated in a 2–cavity connector at the mounting plate. The total current available through the 12-volt power supply is 110 amps (1320 watts).

Ignition controlled power and signal circuits are terminated in the 6–cavity connector from the body harness as follows:

- A violet/yellow 10 amp fused circuit, hot in ACC/ACCESSORY and ON/RUN. The F2 fuse is in the rear compartment fuse block.
- A violet/gray 10 amp fused circuit, hot in START and ON/RUN. The F26 fuse is in the engine compartment fuse block.

Signal circuits are terminated in the 16–cavity connector from the instrument panel harness as follows:

- A yellow park signal wire from the Body Control Module (BCM). The circuit provides switched power when the transmission is not in P (Park) and the engine is running. The electrical load attached to the park circuit must not exceed 0.5 amps and is meant to operate one relay coil.
- A white/black vehicle speed signal (4,000 pulses/mile) from the ABS module. Connect only high impedance load.
- A white/violet surveillance mode circuit. Automatic exterior lighting, interior lighting, audible signals, and radio display are OFF when ground is applied. All driver requested and control functions remain operational. PRNDL is at a very low light.

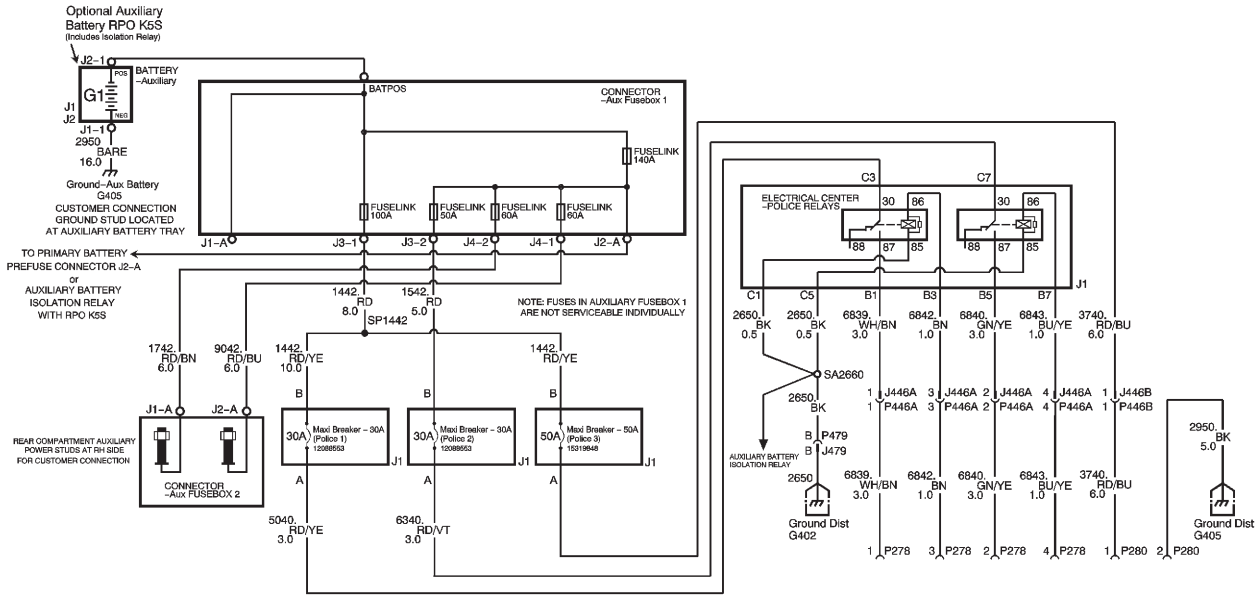
Optional Auxiliary Battery RPO K5S
(Includes Isolation Relay)
J2-1
POS
BATTERY -Auxiliary
G1
NEG
J1
J2
J1-1
2950
BARE
16.0
Ground-Aux Battery G405
CUSTOMER CONNECTION GROUND STUD LOCATED AT AUXILIARY BATTERY TRAY
BATPOS
CONNECTOR -Aux Fusebox 1
FUSELINK 140A
FUSELINK 100A
FUSELINK 50A
FUSELINK 60A
FUSELINK 60A
FUSELINK 60A
J1-A
J3-1
J3-2
J4-2
J4-1
J2-A
TO PRIMARY BATTERY PREFUSE CONNECTOR J2-A
or
AUXILIARY BATTERY ISOLATION RELAY WITH RPO K5S
1442, RD, 8.0
1542, RD, 5.0
SP1442
NOTE: FUSES IN AUXILIARY FUSEBOX 1 ARE NOT SERVICEABLE INDIVIDUALLY
1742, RD/BN, 6.0
9042, RD/BU, 6.0
1442, RD/YE, 10.0
1442, RD/YE
J1-A
J2-A
REAR COMPARTMENT AUXILIARY POWER STUDS AT RH SIDE FOR CUSTOMER CONNECTION
CONNECTOR -Aux FUSEBOX 2
30A Maxi Breaker - 30A (Police 1) 12088553
30A Maxi Breaker - 30A (Police 2) 12088553
50A Maxi Breaker - 50A (Police 3) 15319648
5040, RD/YE, 3.0
6340, RD/VT, 3.0
C3
C7
ELECTRICAL CENTER -POLICE RELAYS
30
86
88
87
85
C1
C5
B1
B3
B5
B7
J1
2650, BK, 0.5
2650, BK, 0.5
6839, WH/BN, 3.0
6842, BN, 1.0
6840, GN/YE, 3.0
6843, BU/YE, 1.0
3740, RD/BU, 6.0
SA2660
2650, BK
J446A
P446A
J446B
P479
J479
AUXILIARY BATTERY ISOLATION RELAY
2650
Ground Dist G402
P278
P280
2950, BK, 5.0
Ground Dist G405

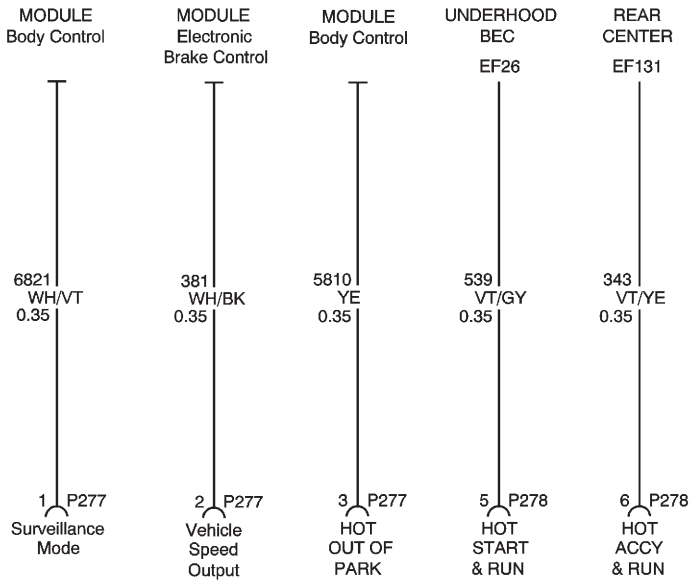

SEO Available Options

SEO Available Options - Police Package and Special Service Package

⚠ Caution

GM cannot be responsible for any changes made to the vehicle. Have all electrical and body modifications performed by experienced technicians.

- Be sure that any modified or added wiring will work properly with your vehicle's wiring system.
- See that all wiring is properly protected by fuses, and not causing an overload to connectors and components.

(Continued)

Caution (Continued)

- Do not route wiring in areas of the vehicle where temperatures can be high or where wiring may be cut, pinched, or rubbed.
- See that all added wiring is of the same or larger gauge than the wire it is being attached to for proper fuse protection.
- Be sure that all holes drilled in the body are properly sealed and corrosion protected. See that the vehicle's wiring harnesses, piping, and other components have not been displaced or damaged during customer installations of equipment and wiring.

(Continued)

Caution (Continued)

- Do not route wiring or equipment which could interfere with roof-mounted side impact airbags. See *Airbag Deployment Diagrams on page 3-22*.

⚠ Caution

Overloading the vehicle's electrical system may damage your vehicle's accessories. Do not overload the vehicle's system by having unnecessary accessories on at the same time.

Auxiliary Battery (SEO K5S)

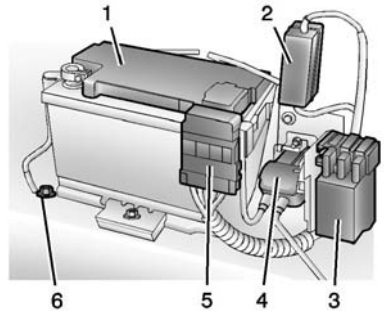

1. Auxiliary battery
2. Auxiliary power junction block
3. Right side rear compartment relay center
4. Battery isolation relay
5. Prefuse assembly
6. Ground stud

This feature consists of a 700 CCA auxiliary battery (1) mounted on the passenger side of the trunk and

connected to the electrical system with a prefuse assembly (5). Also included is an isolation relay (4) which is activated whenever the ignition is in the ON/RUN position. The isolation relay is intended to isolate the auxiliary battery and connected load from the primary battery to avoid unintended rundown of the primary battery. When the engine is running, the auxiliary battery is charged. See *Wiring Provisions for 12-Volt Battery Power Supply on page 15-3*.

Auxiliary Dome Lamp - SEO 6C7

The red and white auxiliary dome lamp is located on the headliner between the driver and the front passenger seating positions. The switch for this lamp is located at the rear base of the lamp. To operate the lamp, press the switch to one side for red light, and the other for white light. Position the switch in the center for OFF.

Exterior Lamp Emergency Flashing System - SEO 6J7

This feature provides a flashing module, headlamp alternate high-beam flashing, rear alternate flashing of the stop and back-up lamps, and a green control wire for a customer-furnished switch to turn the module on or off. A second blue/green wire permits optional separate control of headlamp flashing and rear lamps flashing with a customer-furnished switch.

To operate the rear lamps flashing separately, 12 volt power to the green wire must be OFF. Open the blue/green wire at the flasher module connector P181, terminal F and apply a separate ground to the blue/green wire via customer switching in the 16 cavity up-fitter connector, located at the equipment mounting plate between the front seats. Do not apply 12 volts to the blue/green wire to avoid damage to the BCM.

The headlamp flashing module is at the rear edge of the passenger side upper radiator support. When activated, the high-beam headlamps will flash alternately at 2.4 flashes per second.

During daylight conditions, the Daytime Running Lamps (DRL) are automatically turned off whenever the headlamp flashing module is activated. During nighttime conditions, the low-beam headlamps turn on automatically while the high-beam headlamps flash. Turning on the high-beam headlamps manually with the turn signal lever will override the flashing module and the high-beam headlamps will operate continuously.

When the headlamp flashing module is activated, the Body Control Module (BCM) will flash the stoplamps and back-up lamps alternately at a rate of 2.4 flashes per second. The center high-mounted stoplamp does not flash and operates only with application of the service brakes.

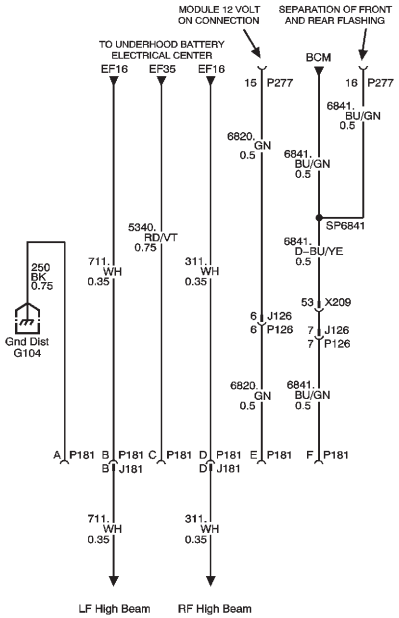

Rear Windows Inoperative - SEO 6N5

This feature makes the rear windows inoperative. The rear windows can only be operated from the driver window switch.

Inoperative Rear Door Locks and Handles - SEO 6N6

This feature makes the rear door locks inoperative. When the feature is enabled, the rear door lock switches are inoperative and the rear doors can only be opened from the outside.

Spotlamp - SEO 7X6 (Left Spotlamp)

This feature includes one pillar-mounted driver side halogen spotlamp.

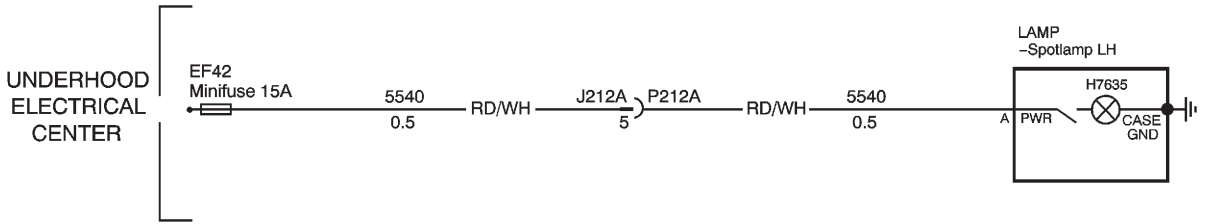
UNDERHOOD
ELECTRICAL
CENTER
EF42
Minifuse 15A
5540
0.5
RD/WH
J212A
5
P212A
RD/WH
5540
0.5
LAMP
–Spotlamp LH
H7635
A
PWR
CASE
GND

Spotlamps - SEO 7X7 (Left and Right Spotlamps)

This feature includes driver side and passenger side pillar-mounted spotlamps, separately fused.

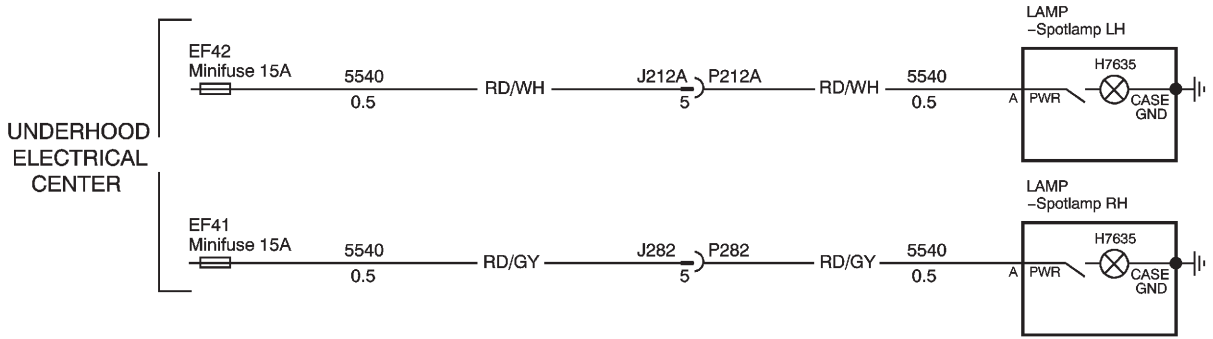
UNDERHOOD
ELECTRICAL
CENTER
EF42
Minifuse 15A
5540
0.5
RD/WH
J212A
5
P212A
RD/WH
5540
0.5
LAMP
–Spotlamp LH
A
PWR
H7635
CASE
GND
EF41
Minifuse 15A
5540
0.5
RD/GY
J282
5
P282
RD/GY
5540
0.5
LAMP
–Spotlamp RH
A
PWR
H7635
CASE
GND

Wiring Provisions for Vehicle Grille Lamps and Speaker/Siren - SEO 6J3

Wiring provisions are provided for connection of customer control switching to customer installed grille lamps and speaker/siren. The interior termination of the wires are in the 16–cavity connector located at the equipment mounting plate between the front seats. The wiring circuits are routed from underneath the instrument panel to a 61 cm (2 ft) coil secured in the area behind the grille, to the left of the hood latch.

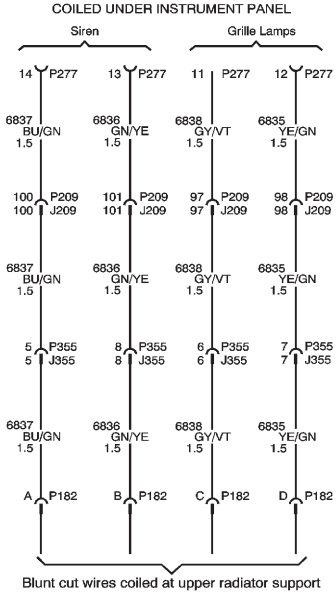

Spotlamp Provisions - SEO 7X8

Provision for customer installed spotlamp includes hole through the left pillar, LH spotlamp bracket and accessible power lead.

Spotlamp Provisions - SEO 7X9

Provisions for customer installed spotlamps includes holes through left and right pillars, LH and RH spotlamp brackets and accessible power leads.

Hole in Roof - SEO 6B7

A hole is provided on the center line of the roof, aligned with the door center pillar and a sealing harness grommet is installed.

Hole in Roof - SEO 6J5

A hole is provided on the passenger side of the roof, aligned with the door center pillar and a sealing harness grommet is installed.

Trunk Lid Warning Lamps - SEO T53

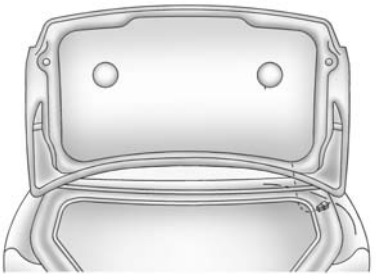

Two LED single-faced lamps are mounted to the inside of the trunk lid. A red lamp is on the driver side and a blue lamp is on the passenger side. The lamps are turned on when the trunk lid is unlatched. They are wired to flash alternately by a flasher located on the right rear trunk lid inner panel.

Wiring Provisions for Horn/Siren Circuit - SEO 6J4

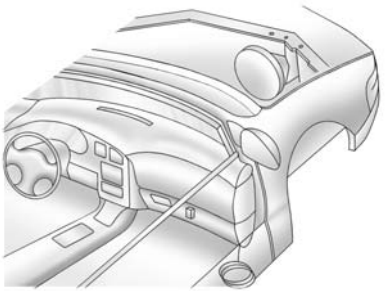

This feature permits customer connection of a switch to select either horn or siren operation when the horn pad is pressed.

Two 0.35 mm² (22 gauge) wires are connected to an in-line connector in the horn circuit of the instrument panel harness. The end of this harness extension is in a 1.5 m (5 ft) loop of wire coiled under the glove box.

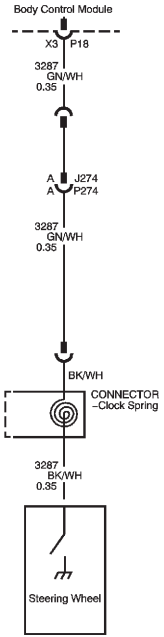

Common Keys - SEO 6E3 and 6E4

Ignition keys are coded alike for all vehicles in fleet. An unlimited number of ignition keys can be programmed for a fleet for either SEO 6E3 or SEO 6E4.

Keys and Keyless Entry Transmitters - Package of Six - SEO AMF

Six keys, cut to a vehicle code or to a common fleet code, SEO 6E3 or SEO 6E4, with integrated Remote Keyless Entry (RKE) transmitters. Transmitters are not programmed. See *Remote Keyless Entry (RKE) System Operation on page 2-3*.

Delete Daytime Running Lamps and Auto Headlamps - SEO VVS

Daytime Running Lamps and Auto Head Lamps are calibrated OFF. Exterior lamps are manually controlled.

Vehicle Speed Limiter - SEO SGT

Vehicle speed is calibrated to limit vehicle speed to maximum of 209 km/h (130 mph).

✍ NOTES

A

Accessories and Modifications 10-2
Accessory Power 9-17
Active Fuel Management® 9-19
Add-On Electrical Equipment 9-35
Adjustments
Lumbar, Front Seats 3-4
Air Cleaner/Filter, Engine 10-12
Air Filter, Passenger Compartment 8-6
Air Vents 8-5
Airbag System
Check 3-35
How Does an Airbag Restrain? 3-17
Passenger Sensing System 3-30
What Makes an Airbag Inflate? 3-17
What Will You See after an Airbag Inflates? 3-17
When Should an Airbag Inflate? 3-16
Where Are the Airbags? 3-14
Airbags
Adding Equipment to the Vehicle 3-34
Deployment Diagrams 3-22
Passenger Status Indicator 5-9
Questions and Answers About Airbags and Specialty Law Enforcement Vehicles 3-19
Readiness Light 5-9
Servicing Airbag-Equipped Vehicles 3-34
System Check 3-12
Alarm
Vehicle Security 2-10
AM-FM Radio 7-11
Antilock Brake
System (ABS) 9-23
Warning Light 5-14
Appearance Care
Exterior 10-73
Interior 10-78
Assistance Program, Roadside 13-4
Audio
Bluetooth 7-24
Audio Players 7-20
CD 7-20
MP3 7-22
Audio System
Fixed Mast Antenna 7-13
Radio Reception 7-13
Theft-Deterrent Feature 7-2
Automatic
Headlamp System 6-2
Transmission 9-20
Transmission Fluid 10-12
Automatic Transmission
Shift Lock Control Function Check 10-24
Auxiliary
Devices 7-24
Auxiliary Battery 15-7
Auxiliary Dome Lamp SEO - 6C7 15-8
Axle, Rear 10-23

B

Battery 10-22
Jump Starting 10-69
Power Protection 6-5
Voltage and Charging Messages 5-21
Wiring Provisions for 12-Volt Power Supply 15-3
Blade Replacement, Wiper . . . 10-25
Bluetooth
Overview 7-28
Bluetooth Audio 7-24
Brake
System Warning Light 5-13
Brakes 10-20
Antilock 9-23
Fluid 10-21
Parking 9-24
System Messages 5-22
Braking 9-3
Break-In, New Vehicle 9-13
Bulb Replacement 10-31
Halogen Bulbs 10-27
Headlamp Aiming 10-26
Headlamps 10-27
Bulb Replacement (cont'd)
Headlamps, Front Turn Signal, and Parking Lamps 10-27
License Plate Lamps 10-30
Taillamps 10-29
Buying New Tires 10-56

C

California
Fuel Requirements 9-31
Perchlorate Materials Requirements 10-2
Warning 10-2
Capacities and Specifications 12-2
Carbon Monoxide
Engine Exhaust 9-19
Trunk 2-9
Winter Driving 9-7
Cautions, Danger, and Warnings iii
CD Player 7-20
Chains, Tire 10-60
Charging System Light 5-10
Check
Engine Light 5-10
Ignition Transmission Lock 10-25
Child Restraints
Infants and Young Children 3-38
Lower Anchors and Tethers for Children 3-43
Older Children 3-36
Securing 3-49, 3-51
Systems 3-40
Circuit
Wiring Provisions for Horn/Siren - SEO 6J4 15-14
Cleaning
Exterior Care 10-73
Interior Care 10-78
Climate Control Systems
Dual Automatic 8-1
Clock 5-3
Cluster, Instrument 5-6
Collision Damage Repair 13-6
Common Keys - SEO 6E3 and 6E4 15-15
Compact Spare Tire 10-67

Compartments
Storage 4-1
Control
Traction and Electronic
Stability 9-25
Control of a Vehicle 9-3
Convex Mirrors 2-12
Coolant
Engine 10-14
Cooling System 10-13
Engine Messages 5-22
Engine Oil 15-2
Cruise Control 9-27
Light 5-17
Messages 5-22
Customer Assistance 13-4
Offices 13-3
Text Telephone (TTY)
Users 13-4
Customer Information
Service Publications
Ordering Information 13-9
Customer Satisfaction
Procedure 13-1
Customer-Installed
Equipment 3-20

D

Damage Repair, Collision 13-6
Danger, Warnings, and
Cautions iii
Data Recorders, Event 13-11
Daytime Running
Lamps (DRL) 6-2
Defensive Driving 9-2
Delete Daytime Running
Lamps and Auto
Headlamps - SEO VVS 15-15
Deployment Diagrams 3-22
Devices
Auxiliary 7-24
Distracted Driving 9-2
Dome Lamps 6-4
Door
Ajar Light 5-18
Ajar Messages 5-22
Locks 2-6
Power Locks 2-8
Drive Belt Routing, Engine 12-4
Driver Information
Center (DIC) 5-18
Driving
Defensive 9-2
Drunk 9-3
For Better Fuel Economy 1-15
Highway Hypnosis 9-6
Hill and Mountain Roads 9-6
If the Vehicle is Stuck 9-8
Loss of Control 9-4
Off-Road Recovery 9-4
Vehicle Load Limits 9-9
Wet Roads 9-5
Winter 9-7
Dual Automatic Climate
Control System 8-1

E

E85 or FlexFuel 9-32
Electrical Equipment,
Add-On 9-35

Electrical System
Engine Compartment
Fuse Block 10-32
Fuses 10-32
Instrument Panel Fuse
Block 10-35
Overload 10-31
Rear Compartment Fuse
Block 10-38
Engine
Air Cleaner/Filter 10-12
Check and Service Engine
Soon Light 5-10
Compartment Overview 10-5
Coolant 10-14
Cooling System 10-13
Cooling System Messages . . .5-22
Drive Belt Routing 12-4
Exhaust 9-19
Oil Life System 10-11
Oil Messages 5-23
Overheating 10-18
Power Messages 5-23
Pressure Light 5-16
Running While Parked 9-20
Starting 9-15
Engine Oil Cooling System 15-2
Entry Lighting 6-5
Equipment 3-20
Event Data Recorders 13-11
Exit Lighting 6-5
Extender, Safety Belt 3-10
Exterior Lamp Controls 6-1
Exterior Lamp Emergency
Flashing System -
SEO 6J7 15-8

F

Filter,
Engine Air Cleaner 10-12
Flash-to-Pass 6-1
Flasher, Wiring Provisions
- SEO 6J3 15-13
Flashers, Hazard Warning 6-3
Flat Tire 10-61
Changing 10-62
FlexFuel
E85 9-32
Floor Mats 10-81
Fluid
Automatic Transmission 10-12
Brakes 10-21
Washer 10-20
Folding Mirrors 2-13
Front Seats
Adjustment 3-3
Fuel 9-30
Additives 9-31
Economy Driving 1-15
Filling a Portable Fuel
Container 9-34
Filling the Tank 9-33
Foreign Countries 9-31
Gasoline Specifications 9-31
Gauge 5-7
Low Fuel Warning Light 5-16
Management, Active 9-19
Recommended 9-30
Requirements, California 9-31
System Messages 5-24
Full-Size Spare Tire 10-68

Fuses 10-32
Engine Compartment
Fuse Block 10-32
Instrument Panel Fuse
Block 10-35
Rear Compartment Fuse
Block 10-38

G

Gasoline
Specifications 9-31
Gauges
Fuel 5-7
Odometer 5-7
Speedometer 5-7
Tachometer 5-7
Trip Odometer 5-7
Warning Lights and
Indicators 5-5
General Information
Service and Maintenance 11-1
Towing 9-35
Vehicle Care 10-2
Glove Box 4-1
GM Mobility Reimbursement
Program 13-4

H

Halogen Bulbs 10-27
Hands-Free Phone 7-34
Hazard Warning Flashers 6-3
Head Restraints 3-2
Headlamps
Aiming 10-26
Automatic 6-2
Bulb Replacement 10-27
Daytime Running
Lamps (DRL) 6-2
Flash-to-Pass 6-1
High-Beam On Light 5-17
High/Low Beam Changer 6-1
Lamps On Reminder 5-17
Heated Mirrors 2-13
High-Beam On Light 5-17
Highway Hypnosis 9-6
Hill and Mountain Roads 9-6
Hill Start Assist (HSA) 9-24
Hole in Roof - SEO 6B7 15-13
Hole in Roof - SEO 6J5 15-14
Hood 10-4
Horn 5-2
Horn/Siren, Wiring
Provisions - SEO 6J4 15-14
How to Wear Safety Belts
Properly 3-7

I

Ignition Positions 9-14
Ignition Transmission Lock
Check 10-25
Immobilizer 2-11
Infants and Young Children,
Restraints 3-38
Info
Quick 7-13
Inoperative Rear Door
Locks and Handles -
SEO 6N6 15-9
Instrument Cluster 5-6
Instrument Panel Overview 1-2
Internet Radio
Pandora 7-14
Introduction . . . . . iii, 7-1

J

Jump Starting 10-69

K

Key and Lock Messages 5-24
Keyless Entry
Remote (RKE) System 2-3
Keys 2-1
Keys and Keyless Entry
Transmitters - Package of
Six - SEO AMF 15-15

L

Labeling, Tire Sidewall 10-42
Lamp
Auxiliary Dome, SEO
- 6C7 15-8
Lamps
Daytime Running (DRL) 6-2
Dome 6-4
Exterior Controls 6-1
Exterior Emergency
Flashing System -
SEO 6J7 15-8
Lamps (cont'd)
Headlamps, Front Turn
Signal, and Parking
Lamps 10-27
License Plate 10-30
Malfunction Indicator 5-10
Messages 5-24
On Reminder 5-17
Taillamps 10-29
Trunk Lid Warning -
SEO T53 15-14
Vehicle Grille Wiring
Provisions - SEO 6J3 15-13
Lap-Shoulder Belt 3-7
LATCH System
Replacing Parts after a
Crash 3-49
LATCH, Lower Anchors and
Tethers for Children 3-43
Light
Parking Brake 5-14
Lighting
Entry 6-5
Exit 6-5
Illumination Control 6-4
Lights
Airbag Readiness 5-9
Antilock Brake System
(ABS) Warning 5-14
Brake System Warning 5-13
Charging System 5-10
Cruise Control 5-17
Door Ajar 5-18
Engine Oil Pressure 5-16
Flash-to-Pass 6-1
High-Beam On 5-17
High/Low Beam Changer 6-1
Low Fuel Warning 5-16
Safety Belt Reminders 5-8
Security 5-17
Service Vehicle Soon 5-13
Sport Mode 5-14
StabiliTrak® OFF 5-15
Tire Pressure 5-16
Traction Control System
(TCS)/StabiliTrak® 5-15
Traction Off 5-14
Limited-Slip Rear Axle 9-27

Locks
Door 2-6
Power Door 2-8
Safety 2-8
Loss of Control 9-4
Low Fuel Warning Light 5-16
Low-Profile Tires 10-42
Lower Anchors and Tethers for Children (LATCH System) 3-43
Lumbar Adjustment 3-4
Front Seats 3-4

M

Maintenance
Records 11-11
Maintenance Schedule
Recommended Fluids and Lubricants 11-9
Malfunction Indicator Lamp 5-10
Messages
Battery Voltage and Charging 5-21
Brake System 5-22
Door Ajar 5-22
Engine Cooling System 5-22
Messages (cont'd)
Engine Oil 5-23
Engine Power 5-23
Fuel System 5-24
Key and Lock 5-24
Lamp 5-24
Ride Control System 5-24
Security 5-24
Service Vehicle 5-24
Tire 5-25
Transmission 5-25
Vehicle 5-21
Vehicle Reminder 5-26
Washer Fluid 5-26
Mirrors
Convex 2-12
Folding 2-13
Heated 2-13
Manual Rearview 2-13
Power 2-13
Monitor System, Tire Pressure 10-49
MP3 7-22

N

New Vehicle Break-In 9-13

O

Odometer 5-7
Trip 5-7
Off-Road
Recovery 9-4
Oil
Engine 10-8
Engine Oil Life System 10-11
Messages 5-23
Pressure Light 5-16
Older Children, Restraints 3-36
Operation, Infotainment System 7-8
Ordering
Service Publications 13-9
Outlets
Power 5-4
Overheating, Engine 10-18
Overview, Infotainment System 7-2

P

Pandora Internet Radio 7-14
Park
Shifting Into 9-17
Shifting Out of 9-18
Parking
Brake 9-24
Brake and P (Park)
Mechanism Check 10-25
Over Things That Burn 9-18
Parking Brake
Light 5-14
Passenger Airbag Status
Indicator 5-9
Passenger Compartment Air
Filter 8-6
Passenger Sensing System . . . 3-30
Perchlorate Materials
Requirements, California 10-2
Personalization
Vehicle 5-26
Phone
Bluetooth 7-28
Hands-Free 7-34
Police Package
SEO Available Options 15-6
Police Package and Special
Service Package, SEO
Standard Options 15-1
Power
Door Locks 2-8
Mirrors 2-13
Outlets 5-4
Protection, Battery 6-5
Retained Accessory (RAP) . . . 9-17
Windows 2-14
Pregnancy, Using Safety
Belts 3-10
Privacy
Radio Frequency
Identification (RFID) 13-12
Proposition 65 Warning,
California 10-2

Q

Questions and Answers
About Airbags and
Specialty Law
Enforcement Vehicles 3-19
Quick Info 7-13

R

Radio Frequency
Identification (RFID) 13-12
Statement 13-12
Radios
AM-FM Radio 7-11
Reception 7-13
Rear Axle 10-23
Limited-Slip 9-27
Rear Door Locks and Handles -
SEO 6N6
Inoperative 15-9
Rear Windows Inoperative -
SEO 6N5 15-9
Rearview Mirrors 2-13
Reclining Seatbacks 3-4
Recommended
Fuel 9-30
Recommended Fluids and
Lubricants 11-9
Records
Maintenance 11-11
Recreational Vehicle
Towing 10-72
Reimbursement Program,
GM Mobility 13-4

Remote Keyless Entry
(RKE) System 2-2, 2-3
Remote Vehicle Start 2-5
Replacement Bulbs 10-31
Replacement Parts
Airbags 3-35
Maintenance 11-10
Replacing Airbag System 3-35
Replacing LATCH System
Parts after a Crash 3-49
Replacing Safety Belt
System Parts after a Crash . . . 3-11
Reporting Safety Defects
Canadian Government 13-10
General Motors 13-11
U.S. Government 13-10
Restraints
Where to Put 3-42
Retained Accessory
Power (RAP) 9-17
Ride Control Systems
Limited Slip Rear Axle 9-27
Messages 5-24
Roads
Driving, Wet 9-5
Roadside Assistance
Program 13-4
Rotation, Tires 10-54
Routing, Engine Drive Belt 12-4
Running the Vehicle While
Parked 9-20

S

Safety Belts 3-5
Care 3-11
Extender 3-10
How to Wear Safety Belts
Properly 3-7
Lap-Shoulder Belt 3-7
Questions and Answers
About Airbags and
Specialty Law
Enforcement Vehicles 3-19
Reminders 5-8
Replacing after a Crash 3-11
Use During Pregnancy 3-10
Safety Defects Reporting
Canadian Government 13-10
General Motors 13-11
U.S. Government 13-10
Safety Locks 2-8
Safety System Check 3-10
Scheduling Appointments 13-6
Seats
Adjustment, Front 3-3
Head Restraints 3-2
Lumbar Adjustment, Front 3-4
Reclining Seatbacks 3-4
Securing Child
Restraints 3-49, 3-51
Security
Light 5-17
Messages 5-24
Vehicle 2-10
Vehicle Alarm 2-10
SEO Available Options
Police Package 15-6
SEO Standard Options
Police Package and
Special Service Package 15-1

Service
Accessories and Modifications 10-2
Doing Your Own Work 10-3
Engine Soon Light 5-10
Maintenance Records 11-11
Maintenance, General Information 11-1
Parts Identification Label 12-1
Publications Ordering Information 13-9
Scheduling Appointments 13-6
Vehicle Messages 5-24
Vehicle Soon Light 5-13
Servicing the Airbag 3-34
Shift Lock Control Function Check, Automatic Transmission 10-24
Shifting
Into Park 9-17
Out of Park 9-18
Signals, Turn and Lane-Change 6-3
Spare Tire
Compact 10-67
Speaker/Siren, Wiring Provisions - SEO 6J3 15-13
Special Equipment Options
Spotlamp Provisions - SEO 7X8 15-13
Spotlamp Provisions - SEO 7X9 15-13
Specifications and Capacities 12-2
Speedometer 5-7
Sport Mode Light 5-14
Spotlamp
SEO 7X6 15-9
Spotlamp Provisions - SEO 7X8 15-13
Spotlamps
SEO 7X7, Available Option 15-11
StabiliTrak
OFF Light 5-15
Start Assist, Hills 9-24
Start Vehicle, Remote 2-5
Starter Switch Check 10-24
Starting the Engine 9-15
Steering 9-3
Wheel Adjustment 5-2
Wheel Controls 5-2
Storage Areas
Glove Box 4-1
Storage Compartments 4-1
Stuck Vehicle 9-8
Symbols iv

T

Tachometer 5-7
Taillamps 10-29
Text Telephone (TTY) Users . . . 13-4
Theft-Deterrent Systems 2-11
Immobilizer 2-11
Time 5-3
Tires
Buying New Tires 10-56
Chains 10-60
Changing 10-62
Compact Spare 10-67
Designations 10-44
Different Size 10-57
Full-Size Spare 10-68
If a Tire Goes Flat 10-61
Inflation Monitor System 10-50

Tires (cont'd)
Inspection 10-53
Low Profile 10-42
Messages 5-25
Pressure Light 5-16
Pressure Monitor System ... 10-49
Rotation 10-54
Sidewall Labeling 10-42
Terminology and Definitions 10-45
Uniform Tire Quality Grading 10-58
Wheel Alignment and Tire Balance 10-59
Wheel Replacement 10-59
When It Is Time for New Tires 10-55
Winter 10-41
Towing
General Information 9-35
Recreational Vehicle 10-72
Vehicle 10-72
Traction
Control System (TCS)/ StabiliTrak® Light 5-15
Limited-Slip Rear Axle 9-27
Off Light 5-14
Traction Control/Electronic Stability Control 9-25
Transmission
Automatic 9-20
Fluid, Automatic 10-12
Messages 5-25
Trip Odometer 5-7
Trunk 2-9
Trunk Lid Warning Lamps - SEO T53 15-14
Turn and Lane-Change Signals 6-3

U

Uniform Tire Quality Grading 10-58
Using the System 7-4
Using This Manual iii

V

Vehicle
Alarm System 2-10
Control 9-3
Identification Number (VIN) 12-1
Load Limits 9-9
Vehicle (cont'd)
Messages 5-21
Personalization 5-26
Reminder Messages 5-26
Remote Start 2-5
Security 2-10
Service Soon Light 5-13
Towing 10-72
Vehicle Care
Tire Pressure 10-48
Vehicle Speed Limiter - SEO SGT 15-15
Ventilation, Air 8-5
Voice Recognition 7-25

W

Warning
Brake System Light 5-13
Warning Lights, Gauges, and Indicators 5-5
Warnings iii
Cautions and Danger iii
Hazard Flashers 6-3
Washer Fluid 10-20
Messages 5-26

Wheels
Alignment and Tire Balance 10-59
Different Size 10-57
Replacement 10-59
When It Is Time for New Tires 10-55
Where to Put the Restraint 3-42
Windows 2-14
Power 2-14
Windshield Wiper/Washer 5-3
Winter Driving 9-7
Winter Tires 10-41
Wiper Blade Replacement 10-25
Wiring Provisions
12-Volt Battery Power Supply 15-3
Horn/Siren Circuit - SEO 6J4 15-14
Vehicle Grille Lamps, and Speaker/Siren - SEO 6J3 15-13