# 2018 370Z

## OWNER'S MANUAL
## and MAINTENANCE INFORMATION

For your safety, read carefully and keep in this vehicle.

# Foreword

Welcome to the growing family of new NISSAN owners. This vehicle is delivered to you with confidence. It was produced using the latest techniques and strict quality control.

This manual was prepared to help you understand the operation and maintenance of your vehicle so that you may enjoy many miles of driving pleasure. Please read through this manual before operating your vehicle.

**A separate Warranty Information Booklet explains details about the warranties covering your vehicle. Additionally, a separate Customer Care/Lemon Law Booklet (U.S. only) will explain how to resolve any concerns you may have with your vehicle, as well as clarify your rights under your state's lemon law.**

In addition to factory installed options, your vehicle may also be equipped with additional accessories installed by NISSAN or by your NISSAN dealer prior to delivery. It is important that you familiarize yourself with all disclosures, warnings, cautions and instructions concerning proper use of such accessories prior to operating the vehicle and/or accessory. See a NISSAN dealer for details concerning the particular accessories with which your vehicle is equipped.

Your NISSAN dealer knows your vehicle best. When you require any service or have any questions, we will be glad to assist you with the extensive resources available to us.

## READ FIRST — THEN DRIVE SAFELY

Before driving your vehicle, read your Owner's Manual carefully. This will ensure familiarity with controls and maintenance requirements, assisting you in the safe operation of your vehicle.

**WARNING**

**IMPORTANT SAFETY INFORMATION REMINDERS!**

**Follow these important driving rules to help ensure a safe and comfortable trip for you and your passengers!**

- **NEVER drive under the influence of alcohol or drugs.**
- **ALWAYS observe posted speed limits and never drive too fast for conditions.**
- **ALWAYS give your full attention to driving and avoid using vehicle features or taking other actions that could distract you.**
- **ALWAYS use your seat belts and appropriate child restraint systems.**
- **ALWAYS provide information about the proper use of vehicle safety features to all occupants of the vehicle.**
- **ALWAYS review this Owner's Manual for important safety information.**

**MODIFICATION OF YOUR VEHICLE**

**This vehicle should not be modified. Modification could affect its performance, safety or durability, and may even violate governmental regulations. In addition, damage or performance problems resulting from modification will not be covered under the NISSAN warranties.**

**WARNING**

**Installing an aftermarket On-Board Diagnostic (OBD) plug-in device that uses the port during normal driving, for example remote insurance company monitoring, remote vehicle diagnostics, telematics or engine**

**reprogramming, may cause interference or damage to vehicle systems. We do not recommend or endorse the use of any aftermarket OBD plug-in devices, unless specifically approved by NISSAN. The vehicle warranty may not cover damage caused by any aftermarket plug-in device.**

## WHEN READING THE MANUAL

**This manual includes information for all features and equipment available on this model. Features and equipment in your vehicle may vary depending on model, trim level, options selected, order, date of production, region or availability. Therefore, you may find information about features or equipment that are not included or installed on your vehicle.**

All information, specifications and illustrations in this manual are those in effect at the time of printing. NISSAN reserves the right to change specifications, performance, design or component suppliers without notice and without obligation. From time to time, NISSAN may update or revise this manual to provide Owners with the most accurate information currently available. Please carefully read and retain with this manual all revision updates sent to you by NISSAN to ensure you have access to accurate and up-to-date information regarding your vehicle. Current versions of vehicle Owner's Manuals and any updates can also be found in the Owner section of the NISSAN website at https://owners.nissanusa.com/nowners/navigation/manualsGuide. If you have questions concerning any information in your Owner's Manual, contact NISSAN Consumer Affairs. See the NISSAN CUSTOMER CARE PROGRAM page in this Owner's Manual for contact information.

## IMPORTANT INFORMATION ABOUT THIS MANUAL

You will see various symbols in this manual. They are used in the following ways:

**WARNING**

**This is used to indicate the presence of a hazard that could cause death or serious personal injury. To avoid or reduce the risk, the procedures must be followed precisely.**

**CAUTION**

**This is used to indicate the presence of a hazard that could cause minor or moderate personal injury or damage to your vehicle. To avoid or reduce the risk, the procedures must be followed carefully.**

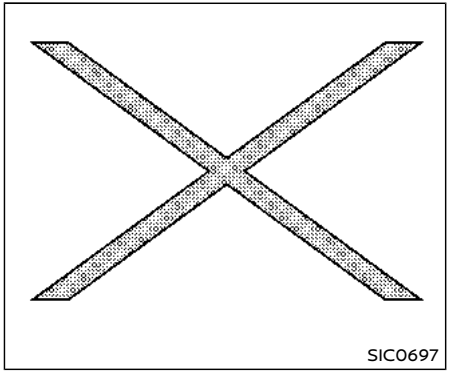


If you see the symbol above, it means **"Do not do this"** or **"Do not let this happen"**.

If you see a symbol similar to those above in an illustration, it means the arrow points to the front of the vehicle.

Arrows in an illustration that are similar to those above indicate movement or action.

Arrows in an illustration that are similar to those above call attention to an item in the illustration.

## CALIFORNIA PROPOSITION 65 WARNING

**WARNING**

**Engine Exhaust, some of its constituents, and certain vehicle components contain or emit chemicals known to the State of California to cause cancer and birth defects or other reproductive harm. In addition, certain fluids contained in vehicles and certain products of component wear contain or emit chemicals known to the State of California to cause cancer and birth defects or other reproductive harm. Operating, servicing and maintaining a passenger vehicle or off-road vehicle can expose you to chemicals including engine exhaust, carbon monoxide, phthalates, and lead, which are known to the State of California to cause cancer and birth defects or other reproductive harm. To minimize exposure, avoid breathing exhaust, do not idle the engine except as necessary, service your vehicle in a well-ventilated area and wear gloves or wash your hands frequently when servicing your vehicle. For more information go to www.P65Warnings.ca.gov.**

## CANADA'S PRODUCTS CONTAINING MERCURY REGULATIONS

The xenon headlights (if so equipped) on your vehicle contain mercury. If these parts require disposal, the repair facility vehicle dismantler or recycler should make sure they are recycled or disposed of as hazardous waste in accordance with applicable laws. For information on safe handling procedures, disposal and recycling options in accordance with Canada's Products Containing Mercury Regulations, go to http://www.ec.gc.ca/mercure-mercury/.

## CALIFORNIA PERCHLORATE ADVISORY

**Some vehicle parts, such as lithium batteries, may contain perchlorate material. The following advisory is provided: "Perchlorate Material - special handling may apply, See www.dtsc.ca.gov/hazardouswaste/perchlorate."**

Bluetooth® is a trademark owned by Bluetooth SIG, Inc. and licensed to Visteon Corporation and Clarion Co., Ltd.

SiriusXM® services require a subscription after trial period and are sold separately or as a package. The satellite service is available only in the 48 contiguous USA and DC. SiriusXM® satellite service is also available in Canada: see www.siriusxm.ca.

© 2017 NISSAN MOTOR CO., LTD.

All rights reserved. No part of this Owner's Manual may be reproduced or stored in a retrieval system, or transmitted in any form, or by any means, electronic, mechanical, photocopying, recording or otherwise, without the prior written permission of Nissan Motor Co., Ltd.

## NISSAN CUSTOMER CARE PROGRAM

NISSAN CARES ...

Both NISSAN and your NISSAN dealer are dedicated to serving all your automotive needs. Your satisfaction with your vehicle and your NISSAN dealer are our primary concerns. Your NISSAN dealer is always available to assist you with all your automobile sales and service needs.

However, if there is something that your NISSAN dealer cannot assist you with or you would like to provide NISSAN directly with comments or questions, please contact the NISSAN Consumer Affairs Department using our toll-free number:

**For U.S. customers**
**1-800-NISSAN-1**
**(1-800-647-7261)**
**For Canadian customers**
**1-800-387-0122**

The Consumer Affairs Department will ask for the following information:

- Your name, address, and telephone number
- Vehicle identification number (attached to the top of the instrument panel on the driver's side)
- Date of purchase
- Current odometer reading
- Your NISSAN dealer's name
- Your comments or questions

OR

You can write to NISSAN with the information on the left at:

**For U.S. customers**
**Nissan North America, Inc.**
**Consumer Affairs Department**
**P.O. Box 685003**
**Franklin, TN 37068-5003**
**or via e-mail at:**
**nnaconsumeraffairs@nissan-usa.com**
**For Canadian customers**
**Nissan Canada Inc.**
**5290 Orbitor Drive**
**Mississauga, Ontario L4W 4Z5**
**or via e-mail at:**
**information.centre@nissancanada.com**

If you prefer, visit us at:

**www.nissanusa.com**(for U.S. customers) or

**www.nissan.ca**(for Canadian customers)

We appreciate your interest in NISSAN and thank you for buying a quality NISSAN vehicle.

# Table of Contents


| | |
|---|---|
| Illustrated table of contents | 0 |
| Safety — Seats, seat belts and supplemental restraint system | 1 |
| Instruments and controls | 2 |
| Pre-driving checks and adjustments | 3 |
| Center display, heater, air conditioner, audio, phone and voice recognition systems | 4 |
| Starting and driving | 5 |
| In case of emergency | 6 |
| Appearance and care | 7 |
| Do-it-yourself | 8 |
| Maintenance and schedules | 9 |
| Technical and consumer information | 10 |
| Index | 11 |

# 0 Illustrated table of contents


Seats, seat belts and Supplemental Restraint System (SRS) ..... 0-2
Coupe models ..... 0-2
Roadster models ..... 0-3
Exterior front ..... 0-4
Exterior rear ..... 0-5
Coupe models ..... 0-5
Roadster models ..... 0-6
Exterior (NISMO models) ..... 0-7
Passenger compartment ..... 0-8
Coupe models ..... 0-8
Roadster models ..... 0-9
Cockpit ..... 0-10
Instrument panel ..... 0-11
Meters and gauges ..... 0-12
Engine compartment ..... 0-13
VQ37VHR engine model ..... 0-13
Warning and indicator lights ..... 0-14

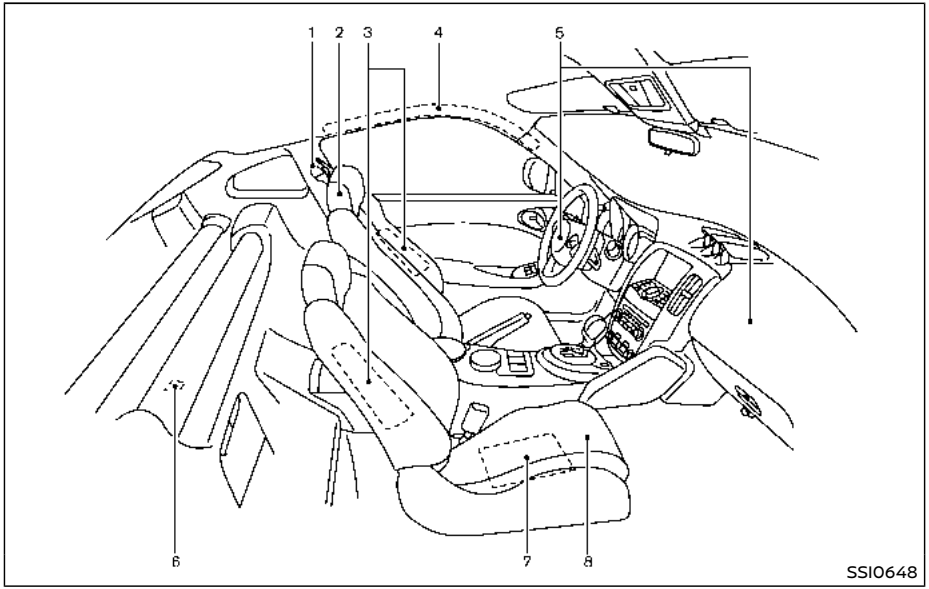


## COUPE MODELS

1. Seat belts (Page 1-10)
   — Seat belts with pretensioners (P.1-43)
2. Head restraints (P.1-6)
3. Front seat-mounted side-impact supplemental air bags (P.1-30)
4. Roof-mounted curtain side-impact and rollover supplemental air bags (P.1-30)
5. Supplemental front-impact air bags (P.1-30)
6. Child restraint anchor point (for top tether strap child restraint) (P.1-20)
7. Occupant classification sensor (pattern sensor) (P.1-36)
8. Front seats (P.1-3)

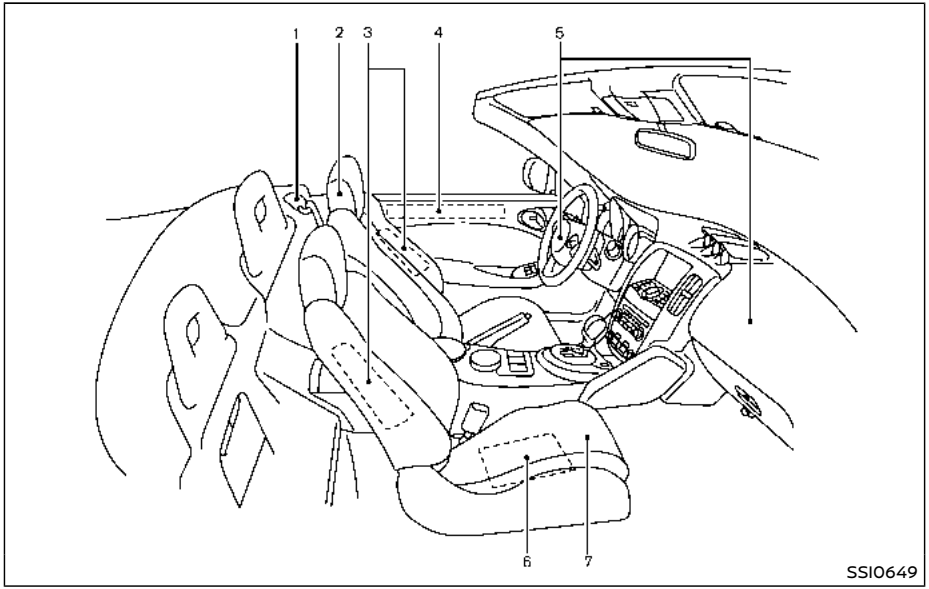


## ROADSTER MODELS

1. Seat belts (P.1-10)
   — Seat belts with pretensioners (P.1-43)
2. Head restraints (P.1-6)
3. Front seat-mounted side-impact supplemental air bags (P.1-30)
4. Door-mounted curtain side-impact supplemental air bags (P.1-30)
5. Supplemental front-impact air bags (P.1-30)
6. Occupant classification sensor (pattern sensor) (P.1-36)
7. Front seats (P.1-3)

## EXTERIOR FRONT

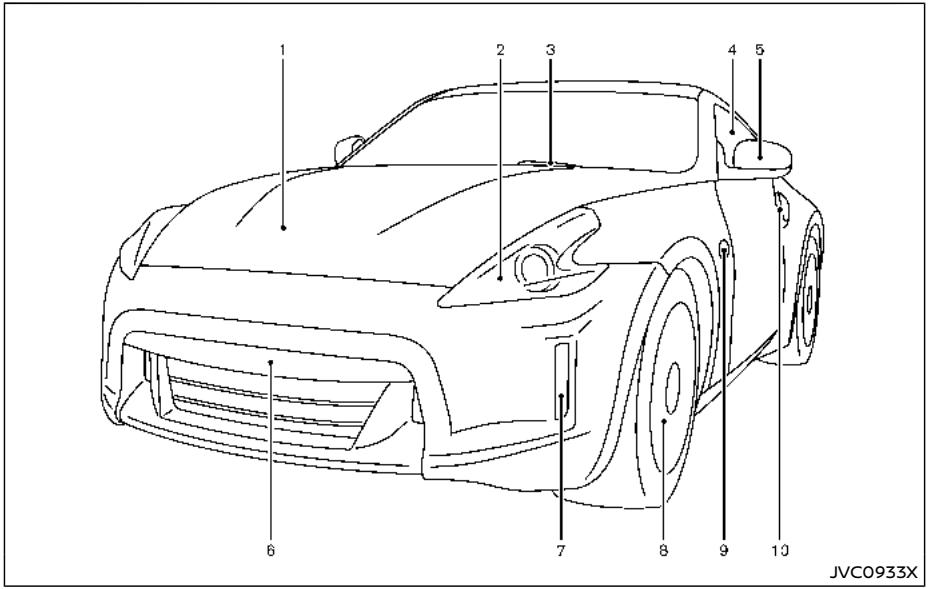


1. Hood (P.3-17)
2. Headlight and turn signal
   — Operation (P.2-34)
   — Bulb replacement (P.8-22)
3. Windshield wiper and washer
   — Operation (P.2-32)
   — Maintenance (P.8-16)
4. Power windows (P.2-46)
5. Outside mirrors (P.3-40)
6. License plate installation (P.10-15)
7. Daytime running light
   — Operation (P.2-34)
   — Bulb replacement (P.8-22)
8. Tires
   — Wheels and tires (P.8-26, P.10-10)
   — Flat tire (P.6-3)
   — Tire Pressure Monitoring System (TPMS) (P.2-13, P.5-3)
9. Side turn signal light (if so equipped)
   — Operation (P.2-34)
   — Bulb replacement (P.8-22)
10. Doors
   — Keys (P.3-3)
   — Door locks (P.3-5)
   — Intelligent Key system (P.3-7)
   — Remote keyless entry system (P.3-14)

## EXTERIOR REAR

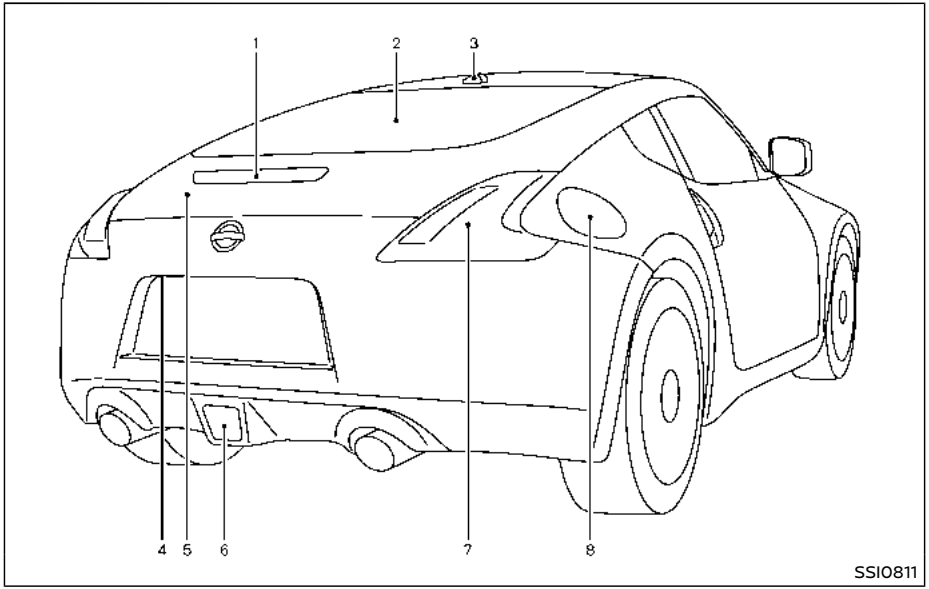


### COUPE MODELS

1. High-mounted stop light (bulb replacement) (P.8-22)
2. Rear window defroster (P.2-33)
3. Satellite antenna (if so equipped) (P.4-30)
4. Rear view camera (if so equipped) (P.4-17)
5. Rear hatch (P.3-18)
   — Intelligent Key system (P.3-7)
   — Remote keyless entry system (P.3-14)
   — Rear hatch opener switch (P.3-18)
6. Rear fog light (if so equipped) (P.2-38)
7. Rear combination light (bulb replacement) (P.8-22)
8. Fuel-filler door
   — Operation (P.3-35)
   — Fuel information (P.10-4)

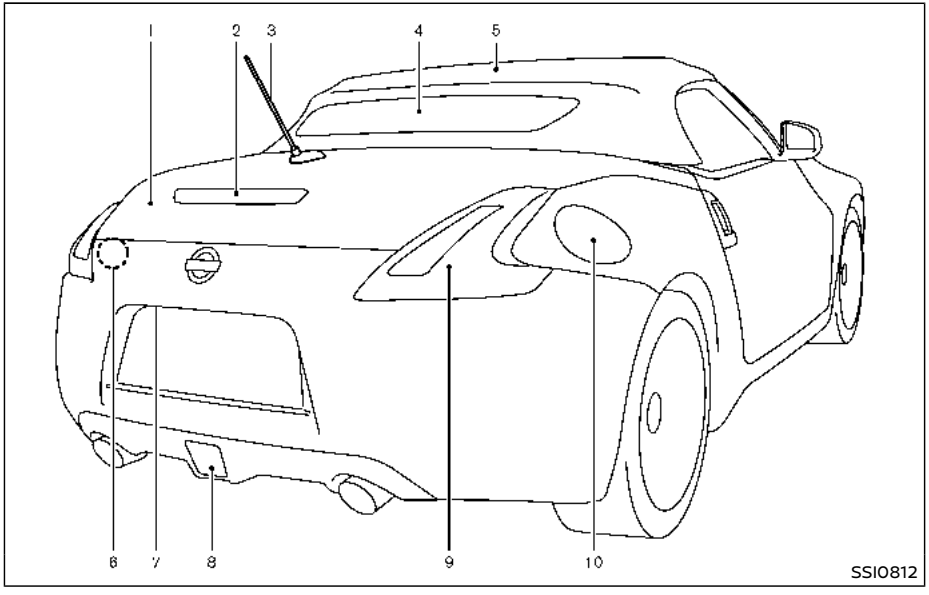


## ROADSTER MODELS

1. Trunk lid (P.3-20)
   — Intelligent Key system (P.3-7)
   — Remote keyless entry system (P.3-14)
   — Trunk lid opener switch (P.3-20)
2. High-mounted stop light (bulb replacement) (P.8-23)
3. Antenna (P.4-30)
4. Rear window defroster (P.2-33)
5. Soft top (P.3-23)
6. Interior trunk lid release (P.3-21)
7. Rear view camera (if so equipped) (P.4-17)
8. Rear fog light (if so equipped) (P.2-38)
9. Rear combination light (bulb replacement) (P.8-23)
10. Fuel
    — Fuel-filler door (P.3-35)
    — Fuel information (P.10-4)

## EXTERIOR (NISMO models)

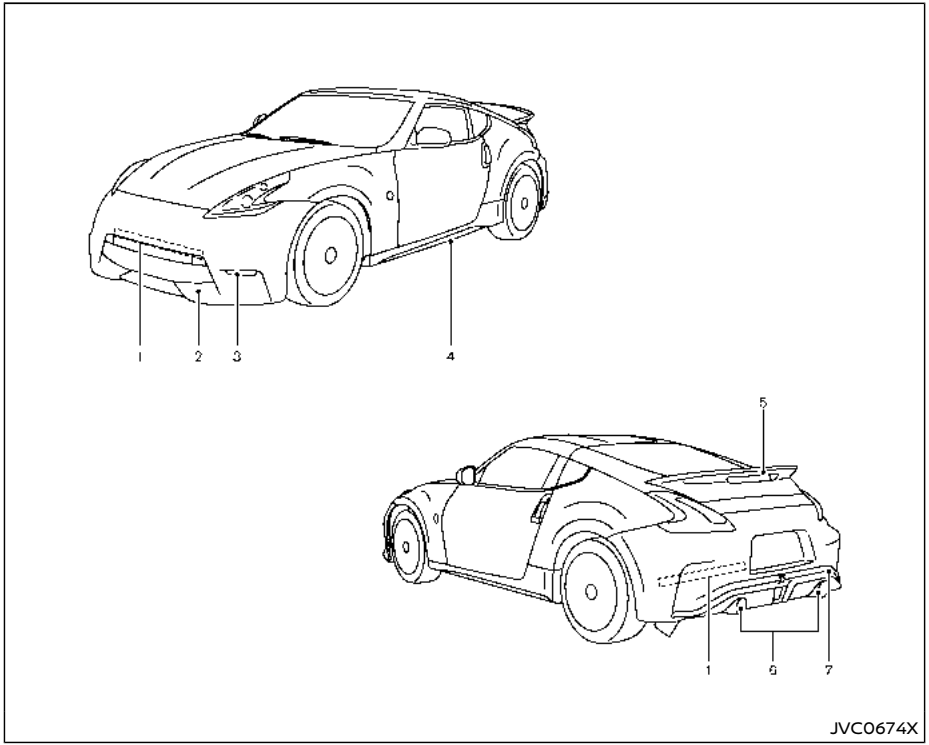


For NISMO models, the vehicle parts listed below require special care or caution for treating. Refer to the additional information in each section.

1. Performance dampers (P.5-32)
2. Front bumper with an aerodynamic splitter (P.3-34, P.6-22)
3. Daytime running light (P.2-34, P.8-22)
4. Side sill extensions (P.3-34)
5. Rear spoiler (P.3-19, P.7-3)
6. Exhaust pipes (P.3-34, P.6-22)
7. Rear bumper with an aerodynamic diffuser (P.3-34, P.6-22)

## PASSENGER COMPARTMENT

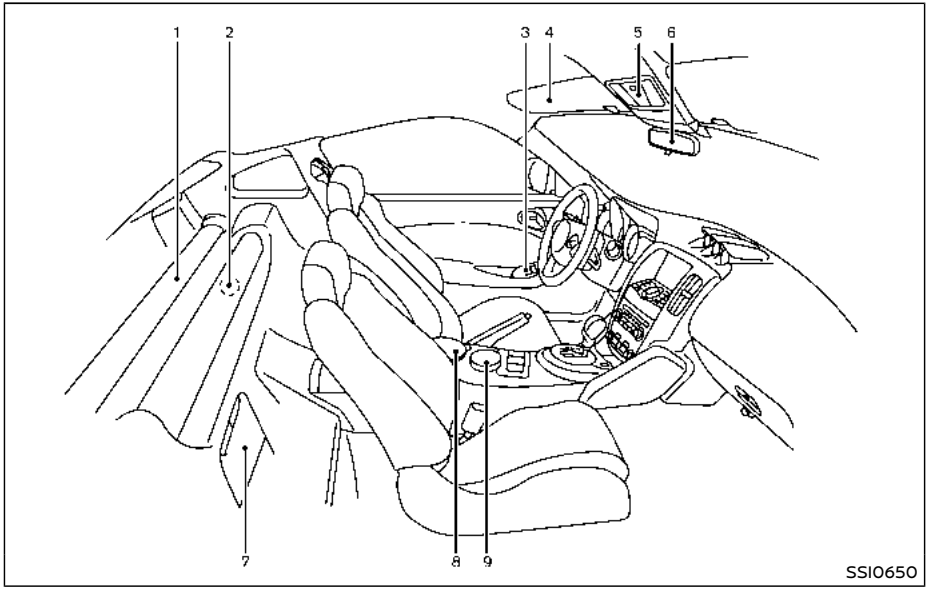


### COUPE MODELS

1. Cargo cover (if so equipped) (P.2-45)
2. Secondary rear hatch release (under the cargo room carpet) (P.3-20)
3. Power windows (P.2-46)
   — Outside mirror remote control switch (P.3-40)
4. Sun visors (P.3-38)
5. Map light (P.2-50)
6. Inside rearview mirror
   — Operation (P.3-39)
   — HomeLink® (if so equipped) (P.2-52)
7. Rear parcel box (P.2-45)
8. Console box
   — Power outlet (P.2-42)
   — USB memory operation (if so equipped) (P.4-47, P.4-59)
   — iPod® player operation (if so equipped) (P.4-49, P.4-68)
9. Front cup holders (P.2-43)

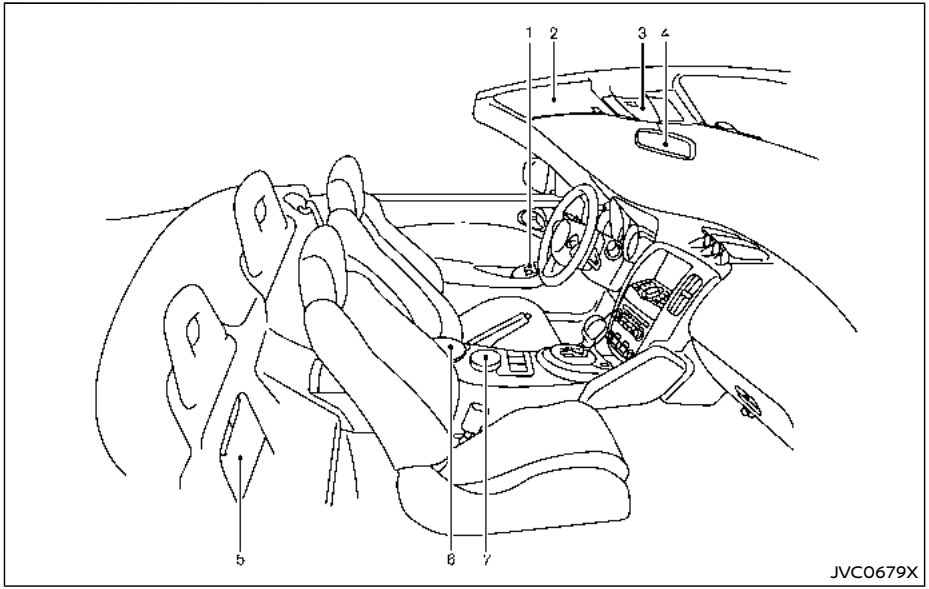


## ROADSTER MODELS

1. Power windows (P.2-46)
   — Outside mirror remote control switch (P.3-40)
2. Sun visors (P.3-38)
3. Map light (P.2-50)
4. Inside rearview mirror
   — Operation (P.3-39)
   — HomeLink® (if so equipped) (P.2-52)
5. Rear parcel box (P.2-45)
   — Secondary trunk lid release (P.3-22)
6. Console box
   — Power outlet (P.2-42)
   — USB memory operation (if so equipped) (P.4-47, P.4-59)
   — iPod® player operation (if so equipped) (P.4-49, P.4-68)
7. Front cup holders (P.2-43)

## COCKPIT

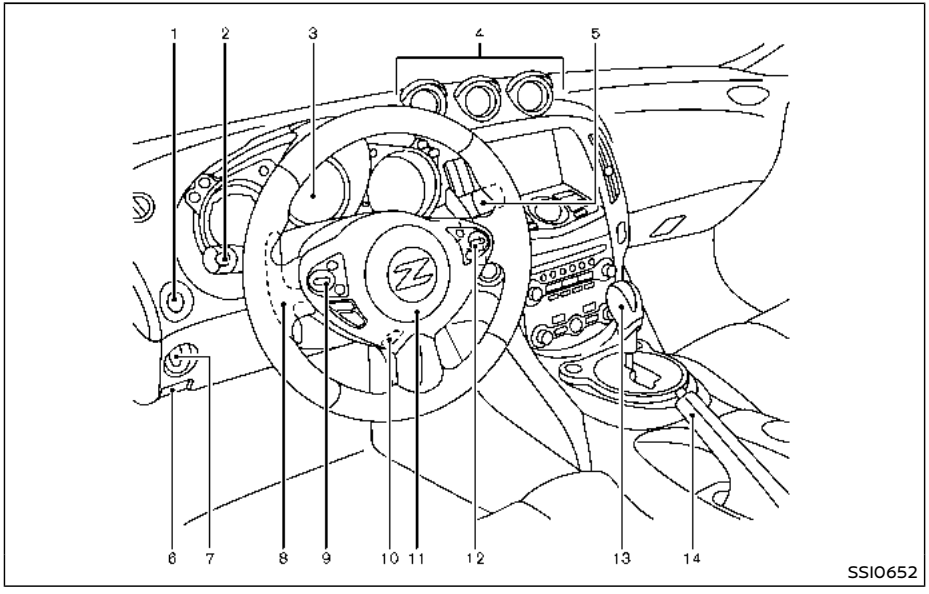


1. Vehicle Dynamic Control (VDC) OFF switch (P.5-30)
2. Headlight, fog light and turn signal switch (P.2-34)
3. Meters and Gauges (combimeter) (P.2-5)
4. Triple meter (P.2-8)
5. Wiper and washer switch (P.2-32)
6. Hood release handle (P.3-17)
7. Intelligent Key port (P.5-10)
8. Paddle shifter (if so equipped) (P.5-14)
9. Steering-wheel-mounted controls (left side)
   — Menu control switch or tuning switch (P.4-73)
   — BACK switch (P.4-73)
   — Phone switch (if so equipped) (P.4-76, P.4-86)
   — Volume control switches (P.4-73)
   — Source select switch (P.4-73)
10. Tilt steering lever (P.3-38)
11. Steering wheel
    — Horn (P.2-38)
    — Driver supplemental air bag (P.1-30)
12. Steering-wheel-mounted controls (right side)
    — Cruise control switches (P.5-22)
13. Shift lever
    — Automatic Transmission (AT) (P.5-12)
    — Manual Transmission (MT) (P.5-17)
14. Parking brake (P.5-21)

## INSTRUMENT PANEL

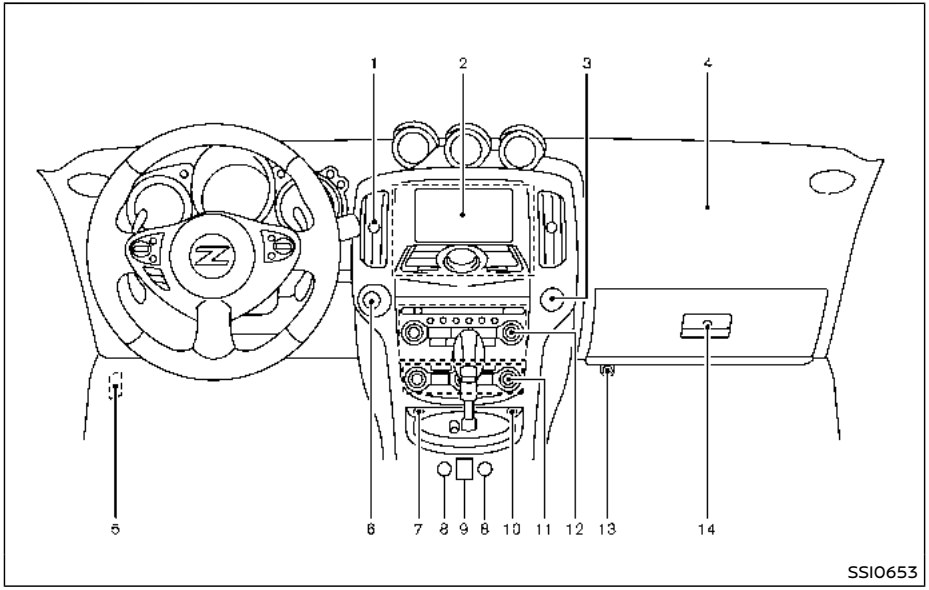


1. Ventilator (P.4-24)
2. Center display and multi-function control panel (if so equipped) (P.4-4) or Instrument pocket (if so equipped) (P.2-43)
   — Navigation system* (if so equipped)
   — Vehicle information and setting buttons (if so equipped) (P.4-8)
   — Bluetooth® Hands-Free Phone System (if so equipped) (P.4-76, P.4-86)
3. Front passenger air bag status light (P.1-36)
4. Front passenger supplemental air bag (P.1-30)
5. Fuse box cover (P.8-18)
6. Push-button ignition switch (P.5-8)
7. Hazard warning flasher switch (P.6-2)
8. Seat heater switch (if so equipped) (P.2-38) or Climate controlled seat switch (if so equipped) (P.2-40)
9. Soft top operating switch (for Roadster models) (P.3-23) or Rear hatch release switch (for Coupe models) (P.3-19)
10. SynchroRev Match mode (S-MODE) switch (if so equipped) (P.5-18)
11. Heater and air conditioner (P.4-25)
    — Rear window defroster switch (P.2-33)
12. Audio system (P.4-30)
13. Power outlet (P.2-42)
14. Glove box (P.2-44)

*: Refer to the separate Navigation System Owner's Manual.

## METERS AND GAUGES

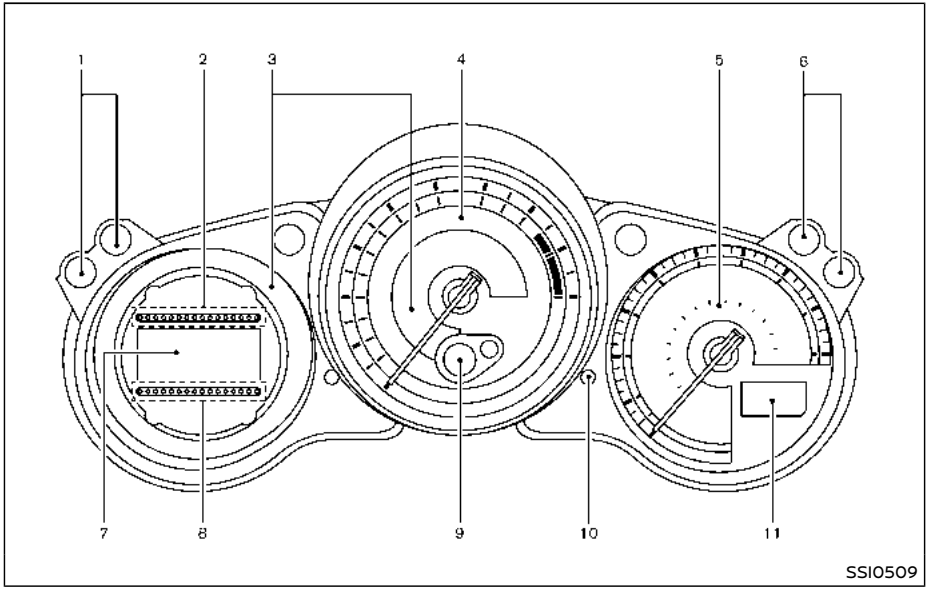


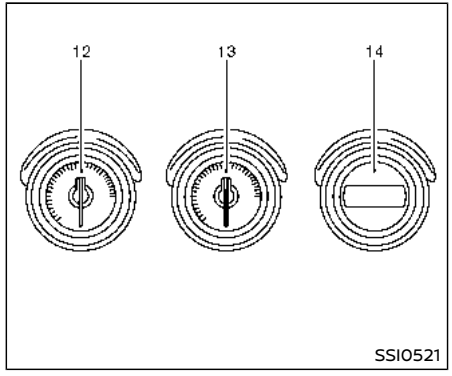


1. ENTER/NEXT switch (P.2-23)
2. Fuel gauge (P.2-8)
3. Warning/Indicator lights (P.2-10)
4. Tachometer (P.2-7)
5. Speedometer (P.2-6)
6. Instrument brightness control switch (P.2-37)
7. Vehicle information display (P.2-19)
8. Engine coolant temperature gauge (P.2-7)
9. Transmission position indicator (if so equipped) (P.2-18)

   — SynchroRev Match mode (S-MODE) indicator (if so equipped) (P.5-18)
10. Odometer/Twin trip odometer control knob (P.2-6)
11. Odometer/Twin trip odometer (P.2-6)
12. Engine oil temperature gauge (P.2-8)
13. Voltmeter (P.2-9)
14. Clock (P.2-9, P.2-27)

## ENGINE COMPARTMENT

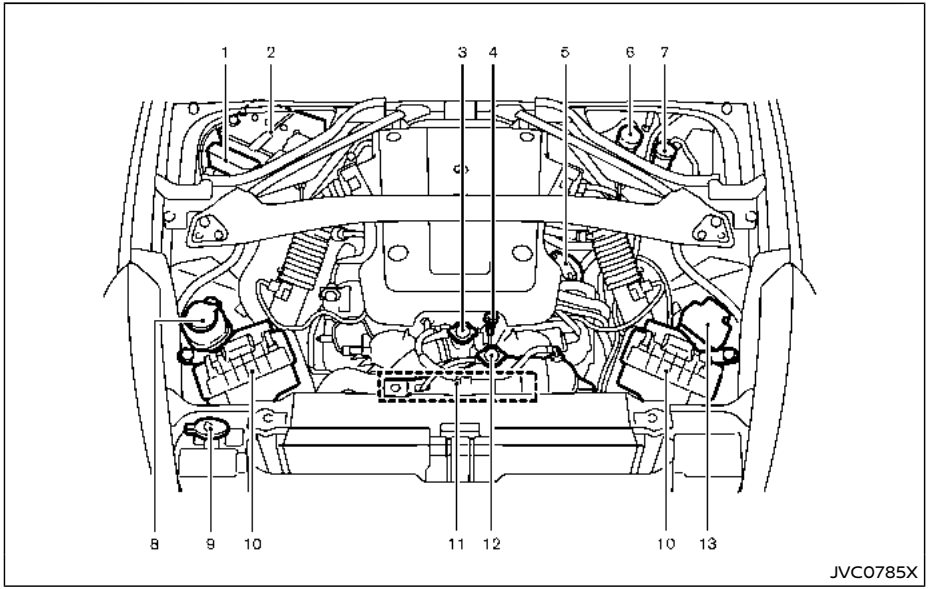


### VQ37VHR ENGINE MODEL

1. Fuse/fusible link holder (P.8-18)
2. Battery (P.8-11)
3. Radiator filler cap (P.8-4)
4. Engine oil dipstick (P.8-6)
5. Engine oil filler cap (P.8-6)
6. Brake fluid reservoir (P.8-9)
7. Clutch fluid reservoir (Manual Transmission models) (P.8-9)
8. Power steering fluid reservoir (P.8-8)
9. Window washer fluid reservoir (P.8-10)
10. Air cleaner (P.8-15)
11. Drive belt location (P.8-14)
12. Engine coolant reservoir (P.8-4)
13. Fuse/fusible link holder (P.8-18)

## WARNING AND INDICATOR LIGHTS

| Warning light | Name | Page |
|---|---|---|
| ABS | Anti-lock Braking System (ABS) warning light | 2-11 |
| AT CHECK | Automatic Transmission (AT) check warning light (if so equipped) | 2-11 |
| BRAKE | Brake warning light | 2-11 |
| | Charge warning light | 2-12 |
| | Engine oil pressure warning light | 2-12 |
| KEY | Intelligent Key system warning light | 2-12 |
| | Low tire pressure warning light | 2-13 |
| | Master warning light | 2-14 |
| | Seat belt warning light | 2-14 |
| | Supplemental air bag warning light | 2-14 |
| | Vehicle Dynamic Control (VDC) warning light | 2-15 |

| Indicator light | Name | Page |
|---|---|---|
| CRUISE | Cruise indicator light | 2-15 |
| | Exterior light indicator | 2-15 |
| OFF | Front passenger air bag status light | 2-16 |
| | High beam indicator light | 2-16 |
| SERVICE ENGINE SOON | Malfunction Indicator Light (MIL) | 2-16 |
| | Rear fog light indicator light (if so equipped) | 2-17 |
| | Security indicator light | 2-17 |
| | Soft top indicator light (Roadster models) | 2-17 |
| S | SynchroRev Match mode (S-MODE) indicator (if so equipped) | 2-17 |
| N/1 M | Transmission position indicator light (if so equipped) | 2-18 |
| | Turn signal/hazard indicator lights | 2-18 |
| OFF | Vehicle Dynamic Control (VDC) off indicator light | 2-18 |

# 1 Safety — Seats, seat belts and supplemental restraint system


Seats ..... 1-2
Front seats ..... 1-3
Head restraints/headrests ..... 1-6
Adjustable head restraint/headrest components ..... 1-7
Remove (if so equipped) ..... 1-7
Install (if so equipped) ..... 1-7
Adjust (if so equipped) ..... 1-8
Front-seat Active Head Restraints (if so equipped) ..... 1-9
Seat belts ..... 1-10
Precautions on seat belt usage ..... 1-10
Pregnant women ..... 1-12
Injured persons ..... 1-12
Three-point type seat belt ..... 1-12
Seat belt extenders ..... 1-15
Seat belt maintenance ..... 1-15
Child safety ..... 1-16
Infants ..... 1-16
Small children (for Coupe models) ..... 1-16
Larger children ..... 1-17
For Roadster models ..... 1-18
Child restraints ..... 1-19
Precautions on child restraints ..... 1-19
Top tether strap child restraint (for Coupe models) ..... 1-20
Forward-facing child restraint installation using the seat belts (for Coupe models) ..... 1-22
Installing top tether strap (for Coupe models) ..... 1-26
Booster seats ..... 1-26
Supplemental restraint system ..... 1-30
Precautions on supplemental restraint system ..... 1-30
NISSAN Advanced Air Bag System (front seats) ..... 1-36
Front seat-mounted side-impact and roof/door-mounted curtain side-impact and rollover (if so equipped) supplemental air bag systems ..... 1-41
Seat belts with pretensioners (front seats) ..... 1-43
Supplemental air bag warning labels ..... 1-44
Supplemental air bag warning light ..... 1-44
Repair and replacement procedure ..... 1-45

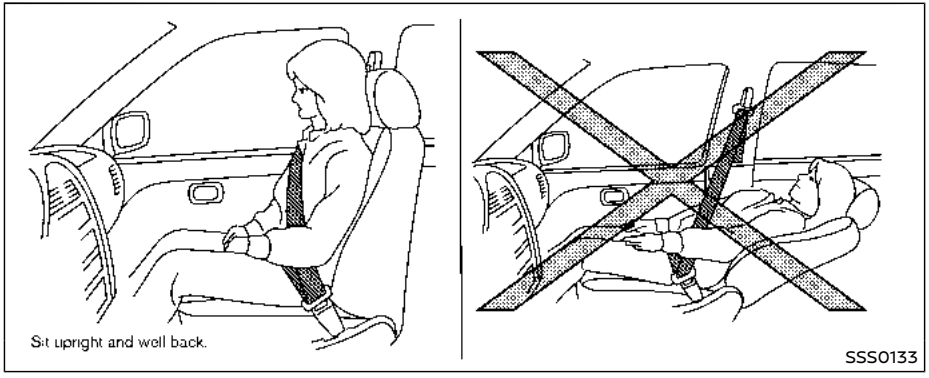


## WARNING

- **Do not ride in a moving vehicle when the seatback is reclined. This can be dangerous. The shoulder belt will not be against your body. In an accident, you could be thrown into it and receive neck or other serious injuries. You could also slide under the lap belt and receive serious internal injuries.**
- **For the most effective protection when the vehicle is in motion, the seat should be upright. Always sit well back and upright in the seat with both feet on the floor and adjust the seat belt properly. See "Precautions on seat belt usage" (P.1-10).**
- **After adjustment, gently rock in the seat to make sure it is securely locked.**
- **Do not leave children unattended inside the vehicle. They could unknowingly activate switches or controls. Unattended children could become involved in serious accidents.**
- **To help avoid risk of injury or death through unintended operation of the vehicle and/or its systems, do not leave children, people who require the assistance of others or pets unattended in your vehicle. Additionally, the temperature inside a closed vehicle on a warm day can quickly become high enough to cause a significant risk of injury or death to people and pets.**
- **The seatback should not be reclined any more than needed for comfort. Seat belts are most effective when the passenger sits well back and straight up in the seat. If the seatback is reclined, the risk of sliding under the lap belt and being injured is increased.**

## CAUTION

- **When adjusting the seat positions, be sure not to contact any moving parts to avoid possible injuries and/or damages.**

## FRONT SEATS

### Front power seat adjustment

**Operating tips:**

- The power seat motor has an auto-reset overload protection circuit. If the motor stops during operation, wait 30 seconds, then reactivate the switch.
- Do not operate the power seat switch for a long period of time when the engine is off. This will discharge the battery.

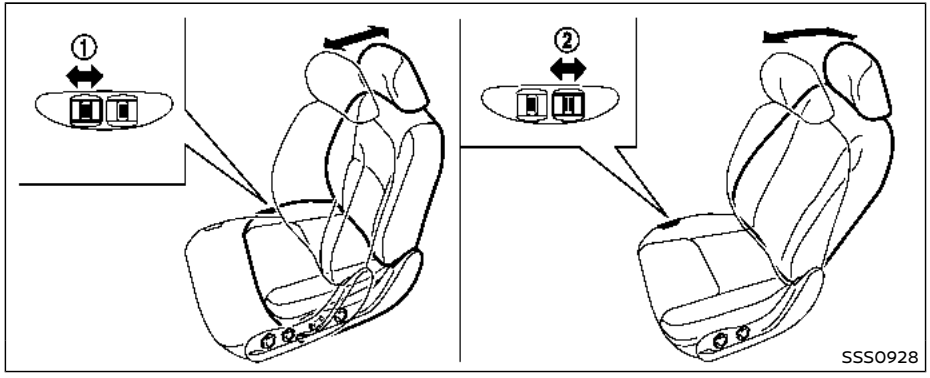


**Forward and backward (if so equipped):**

Moving the switch ① forward or backward will slide the seat forward or backward to the desired position.

**Reclining (if so equipped):**

Move the recline switch ② backward until the desired angle is obtained. To bring the seatback forward again, move the switch ② forward.

The reclining feature allows adjustment of the seatback for occupants of different sizes for added comfort and to help obtain proper seat belt fit. (See "Precautions on seat belt usage" (P.1-10).) The seatback may also be reclined to allow occupants to rest when the vehicle is stopped and the transmission is in the P (Park) position or N (Neutral) position with the parking brake fully applied.

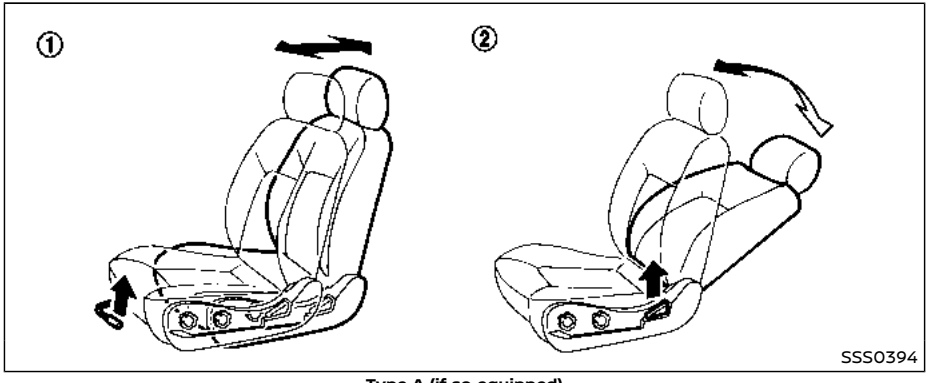


**Type A (if so equipped)**

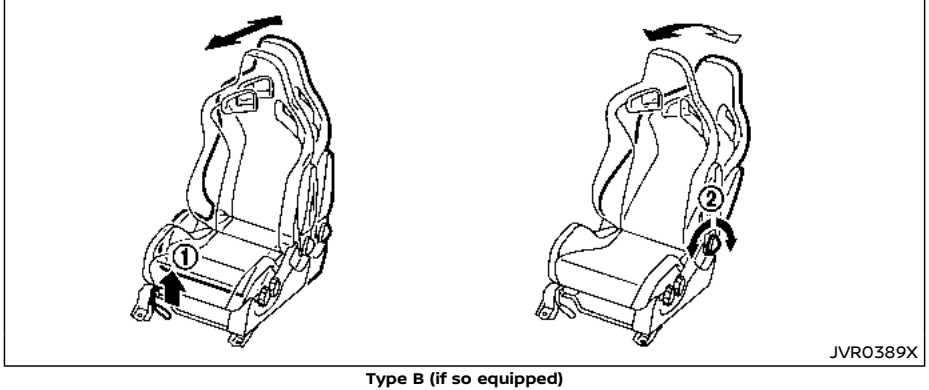


**Type B (if so equipped)**

## Front manual seat adjustment

**Forward and backward:**

Pull the lever up ① while you slide the seat forward or backward to the desired position. Release the lever to lock the seat in position.

**Reclining:**

Type A (if so equipped): To recline the seatback, pull the lever up ② and lean back. To bring the seatback forward again, pull the lever and move your body forward. The seatback will move forward.

Type B (if so equipped): To recline the seatback, turn the adjusting dial ② toward the rear of the vehicle and lean back. To bring the seatback forward, turn the adjusting dial toward the front of the vehicle and lean your body forward.

The reclining feature allows adjustment of the seatback for occupants of different sizes for added comfort and to help obtain proper seat belt fit. See "Precautions on seat belt usage" (P.1-10). The seatback may also be reclined to allow occupants to rest when the vehicle is stopped and the transmission is in the P (Park) position or N (Neutral) position with the parking brake fully applied.

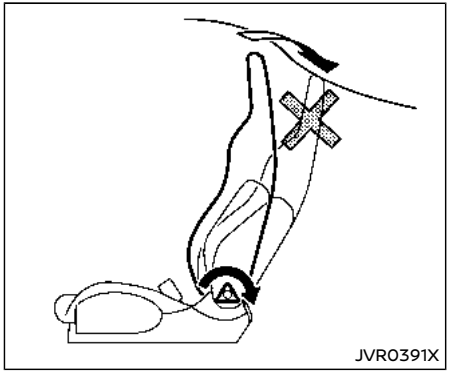


Type B (if so equipped)

**NOTE:**

**When reclining the seat, do not allow the seatback to contact the roof. Doing so may leave temporary indentations on the seat.**

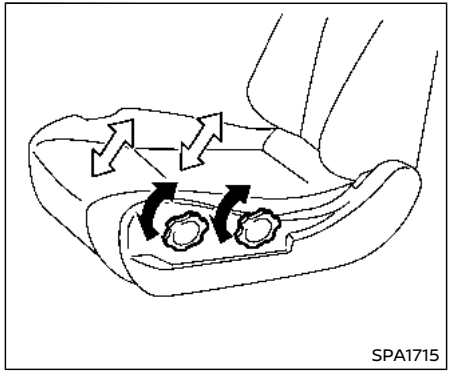


## Seat lifter (if so equipped)

Turn either dial to adjust the angle and height of the seat cushion to the desired position.

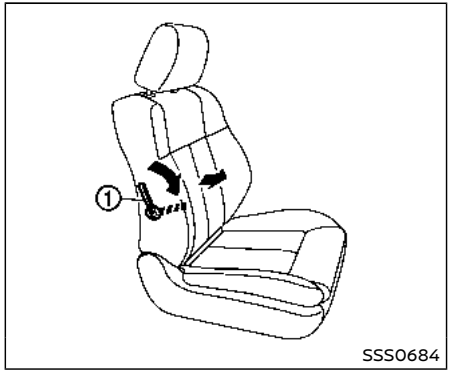


## Lumbar support (if so equipped)

The lumbar support feature provides lower back support to the driver.

Move the lever ① up or down to adjust the seatback lumbar area.

## HEAD RESTRAINTS/HEADRESTS

**WARNING**

**Head restraints/headrests supplement the other vehicle safety systems. They may provide additional protection against injury in certain rear end collisions. Adjustable head restraints/headrests must be adjusted properly, as specified in this section. Check the adjustment after someone else uses the seat. Do not attach anything to the head restraint/headrest stalks or remove the head restraint/headrest. Do not use the seat if the head restraint/headrest has been removed. If the head restraint/headrest was removed, reinstall and properly adjust the head restraint/headrest before an occupant uses the seating position. Failure to follow these instructions can reduce the effectiveness of the head restraint/headrest. This may increase the risk of serious injury or death in a collision.**

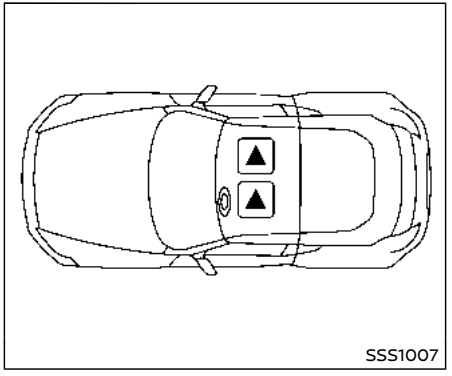


The illustration shows the seating positions equipped with head restraints/headrests.

▲ Indicates the seating position is equipped with a head restraint.

- Your vehicle is equipped with a head restraint/headrest that may be integrated, adjustable or non-adjustable.
- Adjustable head restraints/headrests have multiple notches along the stalk to lock them in a desired adjustment position.
- The non-adjustable head restraints/headrests have a single locking notch to secure them to the seat frame.
- Proper Adjustment:
  - For the adjustable type, align the head restraint/headrest so the center of your ear is approximately level with the center of the head restraint/headrest.
  - If your ear position is still higher than the recommended alignment, place the head restraint/headrest at the highest position.
- If the head restraint/headrest has been removed, ensure that it is reinstalled and locked in place before riding in that designated seating position.

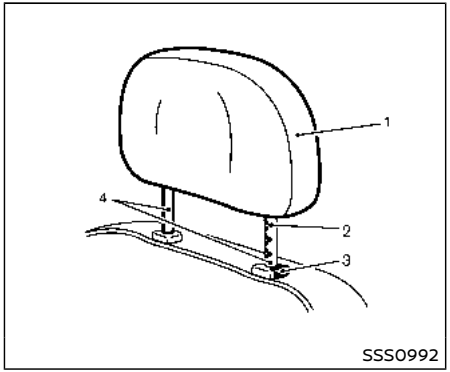


## ADJUSTABLE HEAD RESTRAINT/ HEADREST COMPONENTS

1. Removable head restraint/headrest
2. Multiple notches
3. Lock knob
4. Stalks

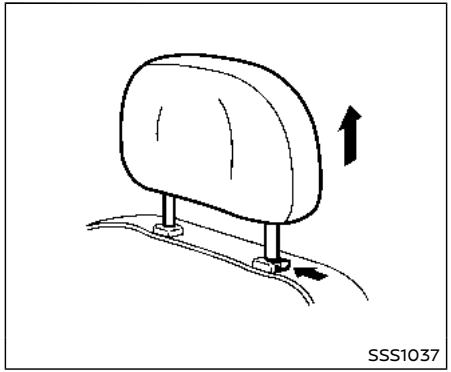


## REMOVE (if so equipped)

Use the following procedure to remove the head restraint/headrest.

1. Pull the head restraint/headrest up to the highest position.
2. Push and hold the lock knob.
3. Remove the head restraint/headrest from the seat.
4. Store the head restraint/headrest properly in a secure place so it is not loose in the vehicle.
5. Reinstall and properly adjust the head restraint/headrest before an occupant uses the seating position.

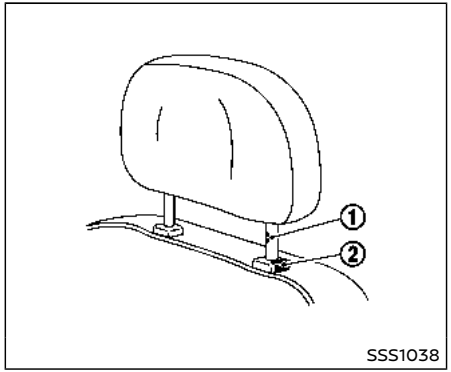


## INSTALL (if so equipped)

1. Align the head restraint/headrest stalks with the holes in the seat. Make sure that the head restraint/headrest is facing the correct direction. The stalk with the adjustment notch ① must be installed in the hole with the lock knob ②.
2. Push and hold the lock knob and push the head restraint/headrest down.
3. Properly adjust the head restraint/headrest before an occupant uses the seating position.

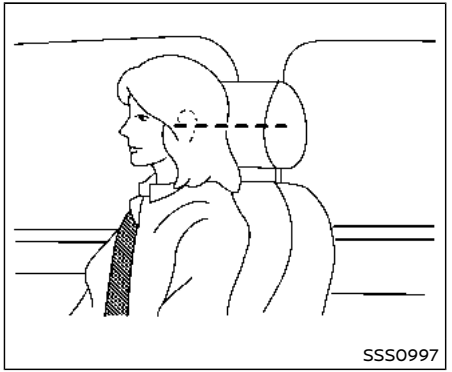


## ADJUST (if so equipped)

Adjust the head restraint/headrest so the center is level with the center of your ears. If your ear position is still higher than the recommended alignment, place the head restraint/headrest at the highest position.

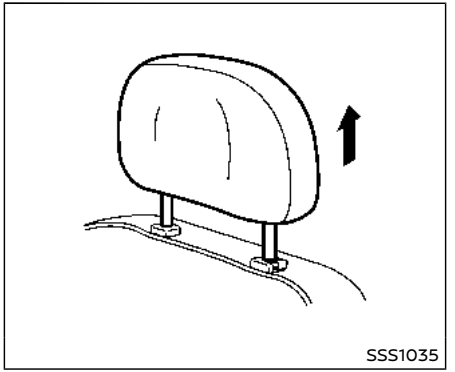


## Raise

To raise the head restraint/headrest, pull it up.

Make sure the head restraint/headrest is positioned so the lock knob is engaged in the notch before riding in that designated seating position.

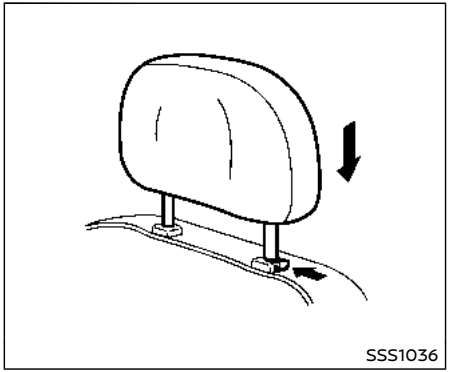


## Lower

To lower, push and hold the lock knob and push the head restraint/headrest down.

Make sure the head restraint/headrest is positioned so the lock knob is engaged in the notch before riding in that designated seating position.

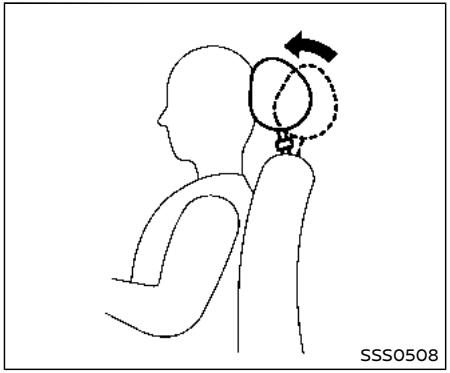


## FRONT-SEAT ACTIVE HEAD RESTRAINTS (if so equipped)

The Active Head Restraint moves forward utilizing the force that the seatback receives from the occupant in a rear-end collision. The movement of the head restraint helps support the occupant's head by reducing its backward movement and helping absorb some of the forces that may lead to whiplash-type injuries.

Active Head Restraints are effective for collisions at low to medium speeds in which it is said that whiplash injury occurs most.

Active Head Restraints operate only in certain rear-end collisions. After the collision, the head restraints return to their original positions.

The front head restraints have multiple adjustment notches.

Properly adjust the Active Head Restraints as described in this section.

## PRECAUTIONS ON SEAT BELT USAGE

If you are wearing your seat belt properly adjusted, and you are sitting upright and well back in your seat with both feet on the floor, your chances of being injured or killed in an accident and/or the severity of injury may be greatly reduced. NISSAN strongly encourages you and all of your passengers to buckle up every time you drive, even if your seating position includes a supplemental air bag.

**Most U.S. states and Canadian provinces or territories specify that seat belts be worn at all times when a vehicle is being driven.**

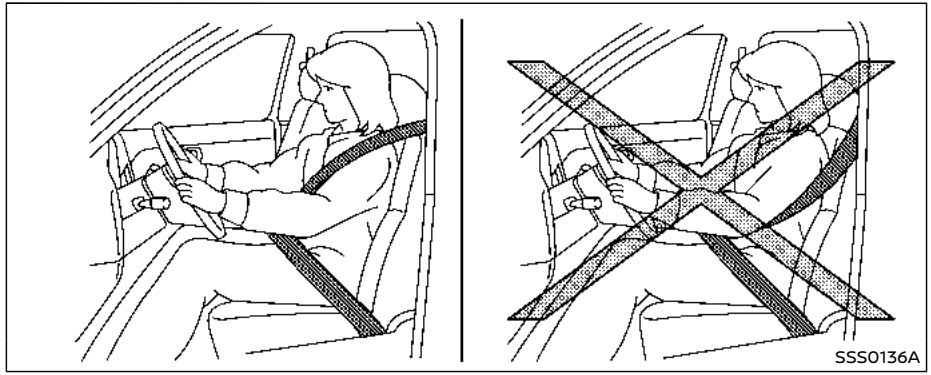


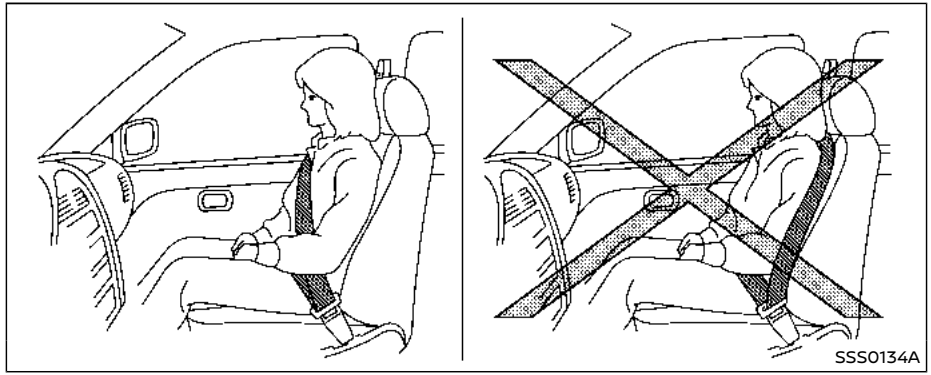

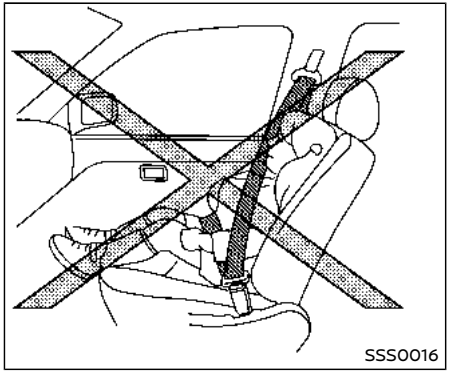


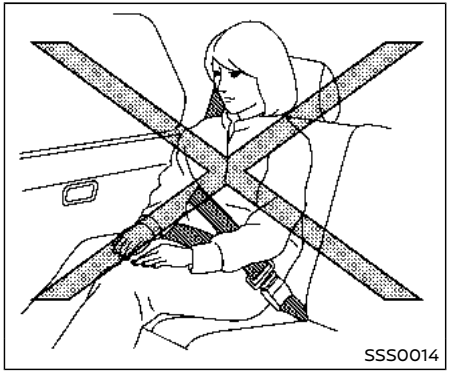


## WARNING

- **Every person who drives or rides in this vehicle should use a seat belt at all times.**
- **The seat belt should be properly adjusted to a snug fit. Failure to do so may reduce the effectiveness of the entire restraint system and increase the chance or severity of injury in an accident. Serious injury or death can occur if the seat belt is not worn properly.**
- **Always route the shoulder belt over your shoulder and across your chest. Never put the belt behind your back, under your arm or across your neck. The belt should be away from your face and neck, but not falling off your shoulder.**
- **Position the lap belt as low and snug as possible AROUND THE HIPS, NOT THE WAIST. A lap belt worn too high could increase the risk of internal injuries in an accident.**
- **Be sure the seat belt tongue is securely fastened to the proper buckle.**
- **Do not wear the seat belt inside out or twisted. Doing so may reduce its effectiveness.**
- **Do not allow more than one person to use the same seat belt.**
- **Never carry more people in the vehicle than there are seat belts.**
- **If the seat belt warning light glows continuously while the ignition is turned ON with all doors closed and all seat belts fastened, it may indicate a malfunction in the system. Have the system checked. It is recommended you visit a NISSAN dealer for this service.**
- **No changes should be made to the seat belt system. For example, do not modify the seat belt, add material or install devices that may change the seat belt routing or tension. Doing so may affect the operation of the seat belt system. Modifying or tampering with the seat belt system may result in serious personal injury.**
- **Once a seat belt pretensioner has activated, it cannot be reused and must be replaced together with**

**the retractor. It is recommended you visit a NISSAN dealer for this service.**

- **All seat belt assemblies, including retractors and attaching hardware, should be inspected after any collision. It is recommended you visit a NISSAN dealer for this service. NISSAN recommends that all seat belt assemblies in use during a collision be replaced unless the collision was minor and the belts show no damage and continue to operate properly.**

  **Seat belt assemblies not in use during a collision should also be inspected and replaced if either damage or improper operation is noted.**
- **All child restraints and attaching hardware should be inspected after any collision. Always follow the restraint manufacturer's inspection instructions and replacement recommendations. The child restraints should be replaced if they are damaged.**

## PREGNANT WOMEN

NISSAN recommends that pregnant women use seat belts. The seat belt should be worn snug, and always position the lap belt as low as possible around the hips, not the waist, and place the shoulder belt over your shoulder and across your chest. Never run the lap/shoulder belt over your abdominal area. Contact your doctor for specific recommendations.

## INJURED PERSONS

NISSAN recommends that injured persons use seat belts, depending on the injury. Check with your doctor for specific recommendations.

## THREE-POINT TYPE SEAT BELT

**WARNING**

- **Every person who drives or rides in this vehicle should use a seat belt at all times.**
- **Do not ride in a moving vehicle when the seatback is reclined. This can be dangerous. The shoulder belt will not be against your body. In an accident, you could be thrown into it and receive neck or other serious injuries. You could also slide under the lap belt and receive serious internal injuries.**
- **For the most effective protection when the vehicle is in motion, the seat should be upright. Always sit well back and upright in the seat with both feet on the floor and adjust the seat belt properly.**
- **Do not allow children to play with the seat belts. Most seating positions are equipped with Automatic Locking Retractor (ALR) mode seat belts. If the seat belt becomes wrapped around a child's neck with the ALR mode activated, the child can be seriously injured or killed if the seat belt retracts and becomes tight. This can occur even if the vehicle is parked. Unbuckle the seat belt to release the child. If the seat belt can not be unbuckled or is already unbuckled, release the child by cutting the seat belt with a suitable tool (such as a knife or scissors) to release the seat belt.**

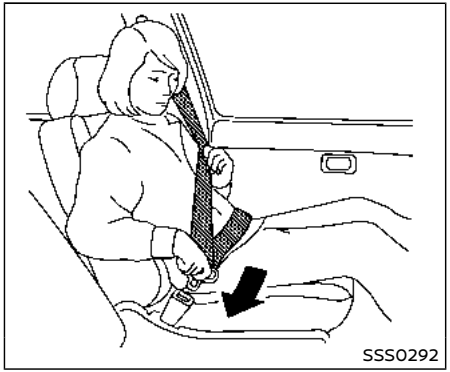


## Fastening the seat belts

1. Adjust the seat. (See "Seats" (P.1-2).)
2. Slowly pull the seat belt out of the retractor and insert the tongue into the buckle until you hear and feel the latch engage.
   - **The retractor is designed to lock during a sudden stop or on impact. A slow pulling motion permits the belt to move, and allows you some freedom of movement in the seat.**
   - **If the seat belt cannot be pulled from its fully retracted position, firmly pull the belt and release it. Then smoothly pull the belt out of the retractor.**

3. Position the lap belt portion **low and snug on the hips** as shown.
4. Pull the shoulder belt portion toward the retractor to take up extra slack. Be sure the shoulder belt is routed over your shoulder and across your chest.

The three-point type seat belts have two modes of operation:

- Emergency Locking Retractor (ELR)
- Automatic Locking Retractor (ALR)

The Emergency Locking Retractor (ELR) mode allows the seat belt to extend and retract to allow the driver and passengers some freedom of movement in the seat. The ELR locks the seat belt when the vehicle slows down rapidly or during

impacts.

The Automatic Locking Retractor (ALR) mode (child restraint mode) locks the seat belt for child restraint installation.

Pull the seat belt out until it is fully extended to activate the ALR mode. Detach the seat belt tongue from the buckle and retract the seat belt completely to cancel the ALR mode and revert back to the ELR mode.

When the ALR mode is activated the seat belt cannot be extended again until the seat belt tongue is detached from the buckle and fully retracted. For additional information, see "Child restraints" (P.1-19).

**The ALR mode should be used only for child restraint installation. During normal seat belt use by an occupant, the ALR mode should not be activated. If it is activated it may cause uncomfortable seat belt tension.**

**WARNING**

**When fastening the seat belts, be certain that seatbacks are completely secured in the latched position. If they are not completely secured, passengers may be injured in an accident or sudden stop.**

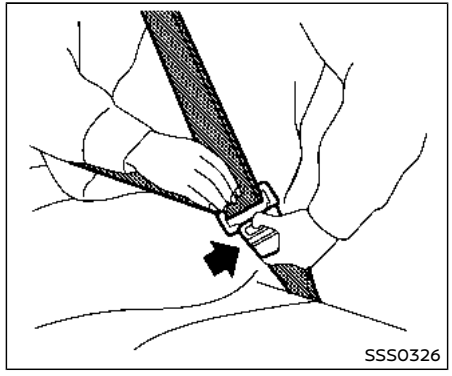


## Unfastening the seat belts

To unfasten the seat belt, push the button on the buckle. The seat belt automatically retracts.

## Checking seat belt operation

Seat belt retractors are designed to lock seat belt movement by two separate methods:

- When the belt is pulled quickly from the retractor.
- When the vehicle slows down rapidly.

To increase your confidence in the seat belts, check the operation as follows:

- Grasp the shoulder belt and pull forward quickly. The retractor should lock and restrict further belt movement.

If the retractor does not lock during this check, get the system checked. It is recommended you visit a NISSAN dealer for this service, or to learn more about seat belt operation.

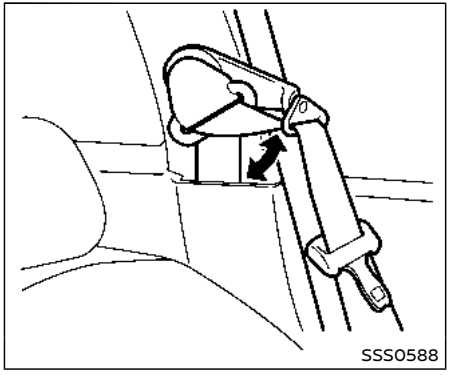


## Shoulder belt arm (for Coupe models)

Before fastening the seat belt, pull the shoulder belt arm forward until it clicks at the detent position.

Pulling the arm forward will allow an easy access to the belt.

## SEAT BELT EXTENDERS

If, because of body size or driving position, it is not possible to properly fit the lap-shoulder belt and fasten it, an extender that is compatible with the installed seat belts is available that can be purchased. The extender adds approximately 8 in (200 mm) of length and may be used for either the driver or front passenger seating position. It is recommended you visit a NISSAN dealer for assistance with purchasing an extender if an extender is required.

**WARNING**

- **It is recommended that only NISSAN seat belt extenders, made by the same company which made the original equipment seat belts, be used with the NISSAN seat belts.**
- **Adults and children who can use the standard seat belt should not use an extender. Such unnecessary use could result in serious personal injury in the event of an accident.**
- **Never use seat belt extenders to install child restraints. If the child restraint is not secured properly, the child could be seriously injured or killed in a collision or a sudden stop.**

## SEAT BELT MAINTENANCE

- **To clean the seat belt webbings,** apply a mild soap solution or any solution recommended for cleaning upholstery or carpets. Then, wipe with a cloth and allow the seat belts to dry in the shade. Do not allow the seat belts to retract until they are completely dry.
- **If dirt builds up in the shoulder belt guide** of the seat belt anchors, the seat belts may retract slowly. Wipe the shoulder belt guide with a clean, dry cloth.
- **Periodically check to see that the seat belt and the metal components** such as buckles, tongues, retractors, flexible wires and anchors work properly. If loose parts, deterioration, cuts or other damage on the webbing is found, the entire seat belt assembly should be replaced.

**WARNING**

**Do not allow children to play with the seat belts. Most seating positions are equipped with Automatic Locking Retractor (ALR) mode seat belts. If the seat belt becomes wrapped around a child's neck with the ALR mode activated, the child can be seriously injured or killed if the seat belt retracts and becomes tight. This can occur even if the vehicle is parked. Unbuckle the seat belt to release the child. If the seat belt can not be unbuckled or is already unbuckled, release the child by cutting the seat belt with a suitable tool (such as a knife or scissors) to release the seat belt.**

**Children need adults to help protect them. They need to be properly restrained.**

In addition to the general information in this manual, child safety information is available from many other sources, including doctors, teachers, government traffic safety offices, and community organizations. Every child is different, so be sure to learn the best way to transport your child.

There are three basic types of child restraint systems:

- Rear-facing child restraint
- Front-facing child restraint
- Booster seat

The proper restraint depends on the child's size. Generally, infants (up to about 1 year and less than 20 lb (9 kg)) should be placed in rear-facing child restraints. Front-facing child restraints are available for children who outgrow rear-facing child restraints and are at least 1 year old. Booster seats are used to help position a vehicle lap/shoulder belt on a child who can no longer use a front-facing child restraint.

**WARNING**

**Infants and children need special protection. The vehicle's seat belts may not fit them properly. The shoulder belt may come too close to the face or neck. The lap belt may not fit over their small hip bones. In an accident, an improperly fitting seat belt could cause serious or fatal injury. Always use appropriate child restraints.**

All U.S. states and Canadian provinces or territories require the use of approved child restraints for infants and small children. (See "Child restraints" (P.1-19).)

Also, there are other types of child restraints available for larger children for additional protection.

## INFANTS

Infants up to at least 1 year old should be placed in a rear-facing child restraint. NISSAN recommends that infants be placed in child restraints that comply with Federal Motor Vehicle Safety Standards or Canadian Motor Vehicle Safety Standards. You should choose a child restraint that fits your vehicle and always follow the manufacturer's instructions for installation and use.

## SMALL CHILDREN (for Coupe models)

Children that are over 1 year old and weigh at least 20 lb (9 kg) should remain in a rear-facing child restraint as long as possible up to the height or weight limit of the child restraint. Children who outgrow the height or weight limit of the rear-facing child restraint and are at least 1 year old should be secured in a forward-facing child restraint with a harness. Refer to the manufacturer's instructions for minimum and maximum weight and height recommendations. NISSAN recom-

mends that small children be placed in child restraints that comply with Federal Motor Vehicle Safety Standards or Canadian Motor Vehicle Safety Standards. You should choose a child restraint that fits your vehicle and always follow the manufacturer's instructions for installation and use.

## LARGER CHILDREN

Children should remain in a forward-facing child restraint with a harness until they reach the maximum height or weight limit allowed by the child restraint manufacturer.

Once a child outgrows the height or weight limit of the harness-equipped forward-facing child restraint, NISSAN recommends that the child be placed in a commercially available booster seat to obtain proper seat belt fit. For a seat belt to fit properly, the booster seat should raise the child so that the shoulder belt is properly positioned across the chest and the top, middle portion of the shoulder. The shoulder belt should not cross the neck or face and should not fall off the shoulder. The lap belt should lie snugly across the lower hips or upper thighs, not the abdomen.

A booster seat can only be used in seating positions that have a three-point type seat belt. The booster seat should fit the vehicle seat and have a label certifying that it complies with Federal Motor Vehicle Safety Standards or Canadian Motor Vehicle Safety Standards.

A booster seat should be used until the child can pass the seat belt fit test below:

- Are the child's back and hips against the vehicle seatback?
- Is the child able to sit without slouching?
- Do the child's knees bend easily over the front edge of the seat with feet flat on the floor?
- Can the child safely wear the seat belt (lap belt low and snug across the hips and shoulder belt across mid-chest and shoulder)?
- Is the child able to use the properly adjusted head restraint/headrest?
- Will the child be able to stay in position for the entire ride?

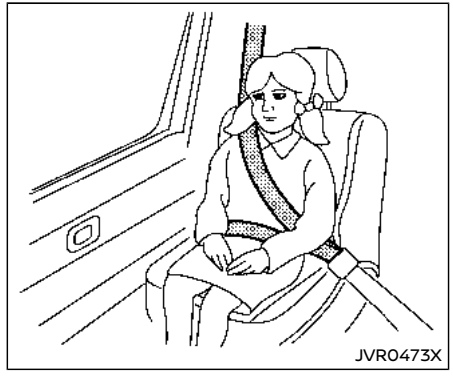


If you answered no to any of these questions, the child should remain in a booster seat using a three-point type seat belt.

**NOTE:**

**Laws in some communities may follow different guidelines. Check local and state regulations to confirm your child is using the correct restraint system before traveling.**

**WARNING**

**Never let a child stand or kneel on any seat and do not allow a child in the cargo area. The child could be**

**seriously injured or killed in a sudden stop or collision.**

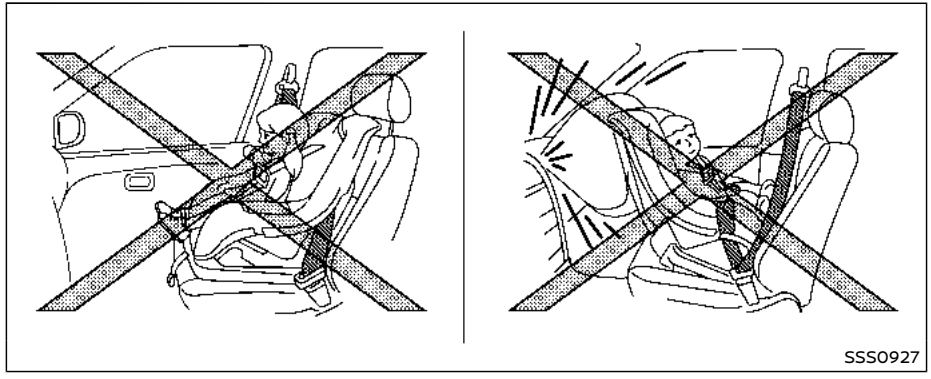


FOR ROADSTER MODELS

**WARNING**

- **Do not let infants and small children ride in Roadster models.**
- **Roadster models are not designed to accommodate rear-facing child restraints or front-facing child restraints.**
- **If you let infants or small children ride in Roadster models, they may be killed or seriously injured in a crash.**

There are three basic types of child restraint systems:

- Rear-facing child restraint (should not be installed in Roadster models)
- Front-facing child restraint (should not be installed in Roadster models)
- Booster seat (only children large enough for booster seats can ride in Roadster models)

**WARNING**

- **Never let an infant or a small child who requires the use of a rear or front-facing child restraint ride in**

**this vehicle. Do not attempt to hold a child in your lap or arms.**

- **Roadster models do not have an anchor for a top tether strap required for most child restraints. Never let children who require the use of rear or front-facing child restraints ride in this vehicle.**
- **Larger children need special protection. The vehicle's seat belts may not fit them properly. The shoulder belt may come too close to the face or neck. The lap belt may not fit over their small hip bones. In an accident, an improperly fitting seat belt could cause serious or fatal injury. Always use appropriate child restraints.**

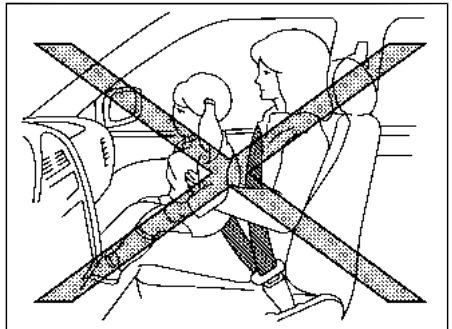

SSS0099

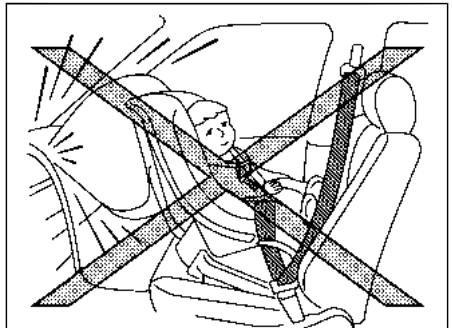

SSS0100

## PRECAUTIONS ON CHILD RESTRAINTS

**WARNING**

- **Failure to follow the warnings and instructions for proper use and installation of child restraints could result in serious injury or death of a child or other passengers in a sudden stop or collision:**
  - **The child restraint must be used and installed properly. Always follow all of the child restraint manufacturer's instructions for installation and use.**
  - **Infants and children should never be held on anyone's lap. Even the strongest adult cannot resist the forces of a collision.**
  - **Do not put a seat belt around both a child and another passenger.**
  - **Even with the NISSAN Advanced Air Bag System, never install a rear-facing child restraint in the front seat. An inflating air bag could ser-**

**iously injure or kill a child.**

- **Be sure to purchase a child restraint that will fit the child and vehicle. Some child restraints may not fit properly in your vehicle.**
- **Child restraint anchor points are designed to withstand loads from child restraints that are properly fitted.**
- **Never use the anchor points for adult seat belts or harnesses.**
- **A child restraint with a top tether strap should not be used in the front passenger seat (for Roadster models).**
- **Keep seatbacks as upright as possible after fitting the child restraint.**
- **Infants and children should always be placed in an appropriate child restraint while in the vehicle.**

- **When the child restraint is not in use, keep it secured with a seat belt. In a sudden stop or collision, loose objects can injure occupants or damage the vehicle.**

**CAUTION**

**A child restraint in a closed vehicle can become very hot. Check the seating surface and buckles before placing a child in the child restraint.**

In general, child restraints are designed to be installed with the lap portion of a lap/shoulder seat belt.

Several manufacturers offer child restraints for children of various sizes. When selecting any child restraint, keep the following points in mind:

- Choose only a restraint with a label certifying that it complies with Federal Motor Vehicle Safety Standard 213 or Canadian Motor Vehicle Safety Standard 213.
- Check the child restraint in your vehicle to be sure it is compatible with the vehicle's seat and seat belt system.
- If the child restraint is compatible with your vehicle, place your child in the child restraint and check the various adjustments to be sure the child restraint is compatible with your child. Choose a child restraint that is designed for your child's height and weight. Always follow all recommended procedures.

The passenger seat is not suitable for use with a rear-facing child restraint for infants. Therefore, infants should not be transported in this vehicle.

**All U.S. states and Canadian provinces or territories require that infants and small children be restrained in an approved child restraint at all times while the vehicle is being operated. Canadian law requires the top tether strap on front-facing child restraints to be secured to the designated anchor point on the vehicle.**

### TOP TETHER STRAP CHILD RESTRAINT (for Coupe models)

If the manufacturer of your child restraint requires the use of a top tether strap, it must be secured to an anchor point.

**WARNING**

- **Child restraint anchorages are designed to withstand only those loads imposed by correctly fitted child restraints. Under no circumstances are they to be used for adult seat belts, harnesses or for attaching other items or equipment to the vehicle. Doing so**

could damage the child restraint anchorages. The child restraint will not be properly installed using the damaged anchorage, and a child could be seriously injured or killed in a collision.

- If the cargo cover (if so equipped) contacts the top tether strap when it is attached to the top tether anchor, remove the cargo cover from the vehicle or secure it on the cargo floor below its attachment location. If the cargo cover is not removed, it may damage the top tether strap during a collision. Your child could be seriously injured or killed in a collision if the child restraint top tether strap is damaged.
- Do not allow cargo to contact the top tether strap when it is attached to the top tether anchor. Properly secure the cargo so it does not contact the top tether strap. Cargo that is not properly secured or cargo that contacts the top tether strap may damage the top tether strap during a collision. Your child could be seriously injured or killed in a collision if the child restraint top tether strap is damaged.

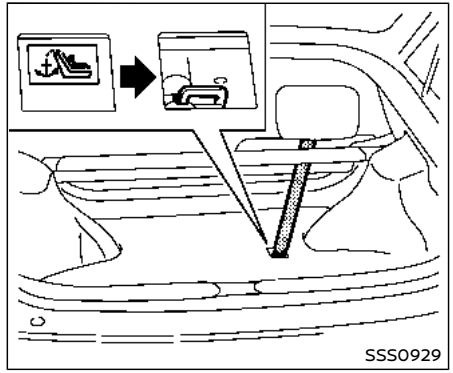


Except for NISMO models

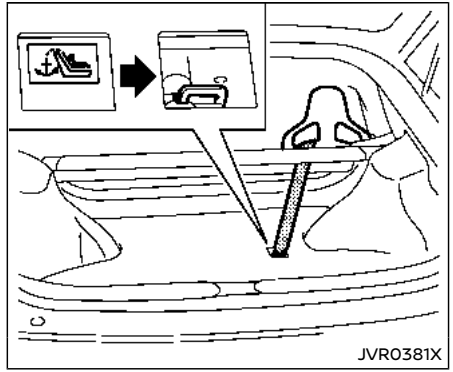


NISMO models

### Top tether anchor point location

The anchor point is located on the floor of the cargo area.

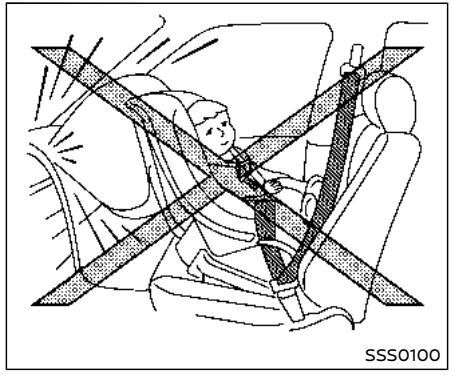


FORWARD-FACING CHILD RESTRAINT INSTALLATION USING THE SEAT BELTS (for Coupe models)

**WARNING**

**The three-point seat belt with Automatic Locking Retractor (ALR) must be used when installing a child restraint. Failure to use the ALR mode will result in the child restraint not being properly secured. The restraint could tip over or be loose and cause injury to a child in a sudden stop or collision. Also, it can change the operation of the front passenger air bag. See "Front passenger air bag and status light" (P.1-38).**

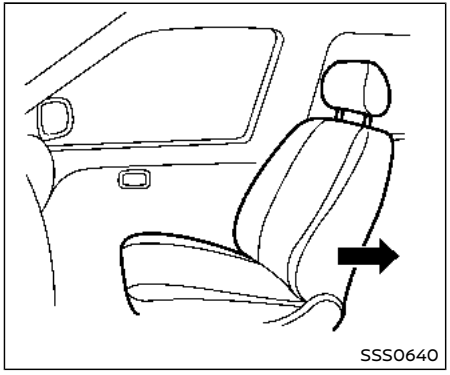


**Front-facing (front passenger seat) — step 1**

Refer to all Warnings and Cautions in the "Child safety" and "Child restraints" sections before installing a child restraint.

Follow these steps to install a front-facing child restraint using the vehicle seat belt in the front passenger seat:

1. **If you must install a child restraint in the front seat, it should be placed in a front-facing direction only. Move the seat to the rearmost position. Child restraints for infants must be used in the rear-facing direction and therefore must not be used in the front seat.**

2. Position the child restraint on the seat. Always follow the child restraint manufacturer's instructions.

   The back of the child restraint should be secured against the vehicle seatback.

   If necessary, adjust or remove the head restraint/headrest to obtain the correct child restraint fit. If the head restraint/headrest is removed, store it in a secure place. **Be sure to reinstall the head restraint/headrest when the child restraint is removed.** See "Head restraints/headrests" (P.1-6) for head restraint adjustment, removal and installation information.

   If the seating position does not have an adjustable head restraint/headrest and it is interfering with the proper child restraint fit, try a different child restraint.

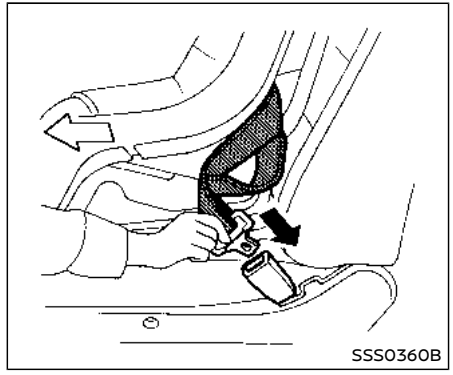


**Front-facing — step 3**

3. Route the seat belt tongue through the child restraint and insert it into the buckle until you hear and feel the latch engage. Be sure to follow the child restraint manufacturer's instructions for belt routing.

   If the child restraint is equipped with a top tether strap, route the top tether strap and secure the tether strap to the tether anchor point. See "Installing top tether strap (for Coupe models)" (P.1-26).

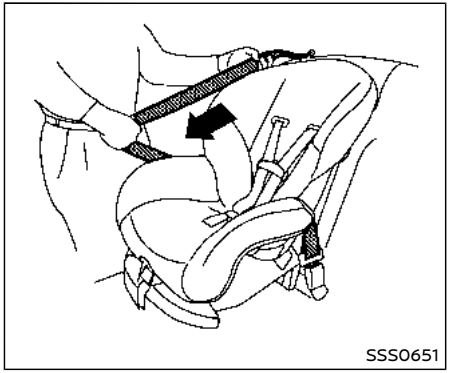


**Front-facing — step 4**

4. Pull the shoulder belt until the belt is fully extended. At this time, the seat belt retractor is in the Automatic Locking Retractor (ALR) mode (child restraint mode). It reverts to Emergency Locking Retractor (ELR) mode when the seat belt is fully retracted.

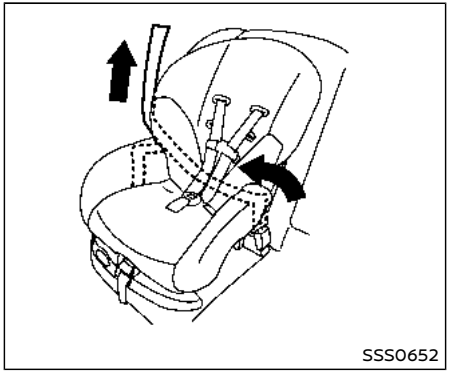


**Front-facing — step 5**

5. Allow the seat belt to retract. Pull up on the shoulder belt to remove any slack in the belt.

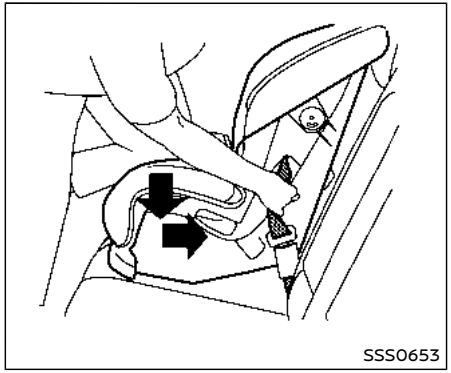


**Front-facing — step 6**

6. Remove any additional slack from the seat belt; press downward and rearward firmly in the center of the child restraint with your knee to compress the vehicle seat cushion and seatback while pulling up on the seat belt.
7. Tighten the tether strap according to the manufacturer's instructions to remove any slack.

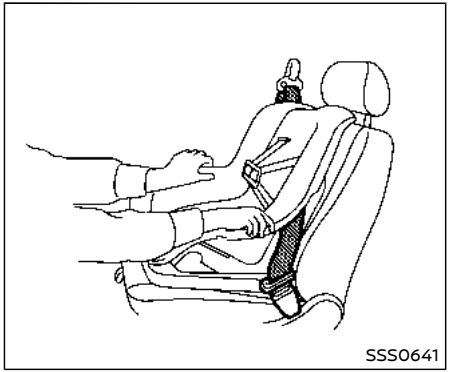


**Front-facing — step 8**

8. After attaching the child restraint, test it before you place the child in it. Push it from side to side while holding the child restraint near the seat belt path. The child restraint should not move more than 1 inch (25 mm) from side to side. Try to tug it forward and check to see if the belt holds the restraint in place. If the restraint is not secure, tighten the seat belt as necessary, or put the restraint in another seat and test it again. You may need to try a different child restraint. Not all child restraints fit in all types of vehicles.
9. Check to make sure the child restraint is properly secured prior to each use. If the seat belt is not locked, repeat steps 2 through 8.

**Front-facing — step 11**

10. If the child restraint is installed in the front passenger seat, push the ignition switch to the ON position. The front passenger air bag status light OFF should illuminate. If this light is not illuminated, see "Front passenger air bag and status light" (P.1-38). Have the system checked. It is recommended you visit a NISSAN dealer for this service.

After the child restraint is removed and the seat belt is fully retracted, the ALR mode (child restraint mode) is canceled.

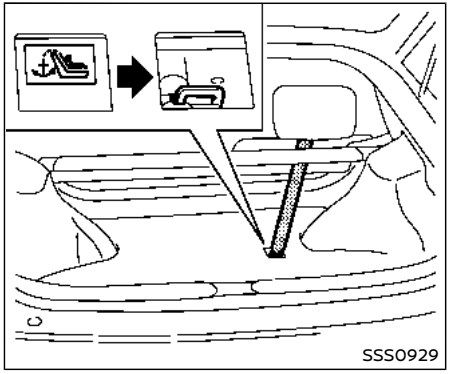


**Except for NISMO models**

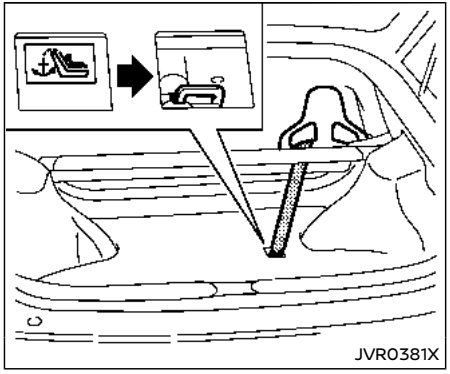


**NISMO models**

## INSTALLING TOP TETHER STRAP (for Coupe models)

First, secure the child restraint with the seat belt.

1. Flip down the flap marked with a label as shown in the illustration.
2. Position the top tether strap over the top of the seatback and secure it to the tether anchor bracket that provides the straightest installation.
3. Tighten the strap according to the manufacturer's instructions to remove any slack.

**If you have any questions when installing a top tether strap, it is recommended you visit a NISSAN dealer for this service.**

## BOOSTER SEATS

### Precautions on booster seats

**WARNING**

**If a booster seat and seat belt are not used properly, the risk of a child being injured in a sudden stop or collision greatly increases:**

- **Make sure the shoulder portion of the belt is away from the child's face and neck and the lap portion of the belt does not cross the stomach.**
- **Make sure the shoulder belt is not behind the child or under the child's arm.**
- **A booster seat must only be installed in a seating position that has a lap/shoulder belt.**

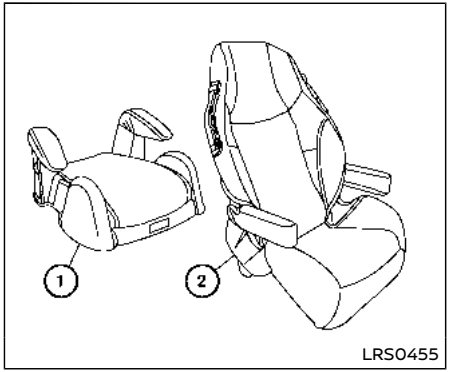


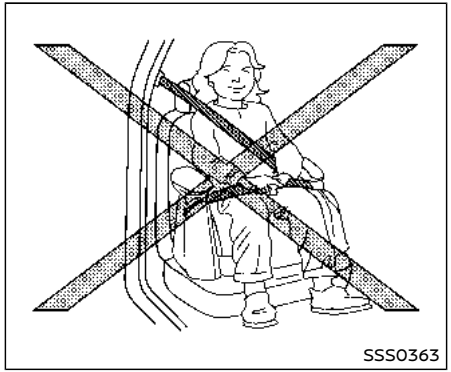


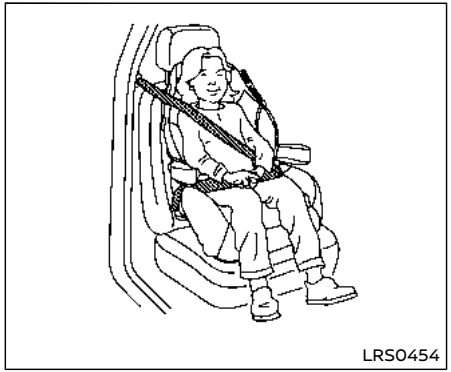


Booster seats of various sizes are offered by several manufacturers. When selecting any booster seat, keep the following points in mind:

- Choose only a booster seat with a label certifying that it complies with Federal Motor Vehicle Safety Standard 213 or Canadian Motor Vehicle Safety Standard 213.
- Check the booster seat in your vehicle to be sure it is compatible with the vehicle's seat and seat belt system.
- Make sure the child's head will be properly supported by the booster seat or vehicle seat. The seatback must be at or above the center of the child's ears. For example, if a low back booster seat ① is chosen, the vehicle seatback must be at or above the center of the child's ears. If the seatback is lower than the center of the child's ears, a high back booster seat ② should be used.
- If the booster seat is compatible with your vehicle, place your child in the booster seat and check the various adjustments to be sure the booster seat is compatible with your child.

  Always follow all recommended procedures.

**All U.S. states and Canadian provinces or territories require that infants and small children be restrained in an approved child restraint at all times while the vehicle is being operated.**

The instructions in this section apply to booster seat installation in the front passenger seat.

## Booster seat installation

**CAUTION**

**Do not use the lap/shoulder belt Automatic Locking Retractor (ALR) mode when using a booster seat with the seat belts.**

Refer to all Warnings and Cautions in the "Child safety", "Child restraints" and "Booster seats" sections earlier in this section before installing a child restraint.

Follow these steps to install a booster seat in the front passenger seat:

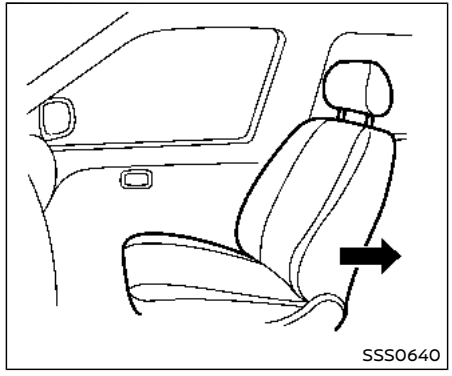

SSS0640

1. **If you must install a booster seat in the front seat, adjust the seatback so that it is upright and then move the seat to the rearmost position. Do not move the seat with the booster seat attached to it.**
2. Position the booster seat on the seat. Only place it in a front-facing direction. Always follow the booster seat manufacturer's instructions.

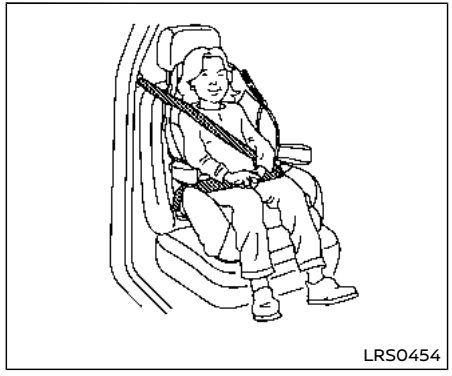

LRS0454

3. The booster seat should be positioned on the vehicle seat so that it is stable.

   If necessary, adjust or remove the head restraint/headrest to obtain the correct booster seat fit. If the head restraint/headrest is removed, store it in a secure place. **Be sure to reinstall the head restraint/headrest when the booster seat is removed.** See "Head restraints/headrests" (P.1-6) for head restraint adjustment, removal and installation information.

   If the seating position does not have an adjustable head restraint/headrest and it is interfering with the proper booster seat fit, try a different booster

seat.

4. Position the lap portion of the seat belt low and snug on the child's hips. Be sure to follow the booster seat manufacturer's instructions for adjusting the belt routing.
5. Pull the shoulder belt portion of the seat belt toward the retractor to take up extra slack. Be sure the shoulder belt is positioned across the top, middle portion of the child's shoulder. Be sure to follow the booster seat manufacturer's instructions for adjusting the belt routing.
6. Follow the warnings, cautions and instructions for properly fastening a seat belt shown in the "Three-point type seat belt" (P.1-12).

7. If the booster seat is installed in the front passenger seat, push the ignition switch to the ON position. The front passenger air bag status light may or may not illuminate depending on the size of the child and the type of booster seat used. (See "Front passenger air bag and status light" (P.1-38).)

## PRECAUTIONS ON SUPPLEMENTAL RESTRAINT SYSTEM

This Supplemental Restraint System (SRS) section contains important information concerning the following systems.

- Driver and passenger supplemental front-impact air bag (NISSAN Advanced Air Bag System)
- Front seat-mounted side-impact supplemental air bag
- Roof-mounted curtain side-impact and rollover supplemental air bag (Coupe models)
- Door-mounted curtain side-impact supplemental air bag (Roadster models)
- Seat belt with pretensioner

**Supplemental front-impact air bag system:** The NISSAN Advanced Air Bag System can help cushion the impact force to the head and chest of the driver and front passenger in certain frontal collisions.

**Front seat-mounted side-impact supplemental air bag system:** This system can help cushion the impact force to the chest and pelvis area of the driver and front passenger in certain side impact collisions. The front seat side-impact supplemental air bags are designed to inflate on the side where the vehicle is impacted.

**Roof-mounted curtain side-impact and rollover supplemental air bag system (for Coupe models):** This system can help cushion the impact force to the head of the driver and front passenger in certain side-impact or rollover collisions. In a side-impact, the curtain air bags are designed to inflate on the side where the vehicle is impacted. In a rollover, curtain air bags on both sides are designed to inflate and remain inflated for a short time.

Curtain air bags are also designed to inflate in certain types of rollover collisions or near rollovers. As a result, certain vehicle movements may cause the curtain air bags to inflate.

**Door-mounted curtain side-impact supplemental air bag system (for Roadster models):** This system can help cushion the impact force to the heads of the driver and front passenger in certain side impact collisions. The curtain air bags are designed to inflate on the side where the vehicle is impacted.

These supplemental restraint systems are designed to **supplement** the crash protection provided by the driver and passenger seat belts and are **not a substitute** for them. Seat belts should always be correctly worn and the occupant seated a suitable distance away from the steering wheel, instrument panel and door finishers. (See "Seat belts" (P.1-10) for instructions and precautions on seat belt usage.)

**The supplemental air bags operate only when the ignition switch is in the ON position.**

**After pushing the ignition switch to the ON position, the supplemental air bag warning light illuminates. The supplemental air bag warning light will turn off after about 7 seconds if the systems are operational.**

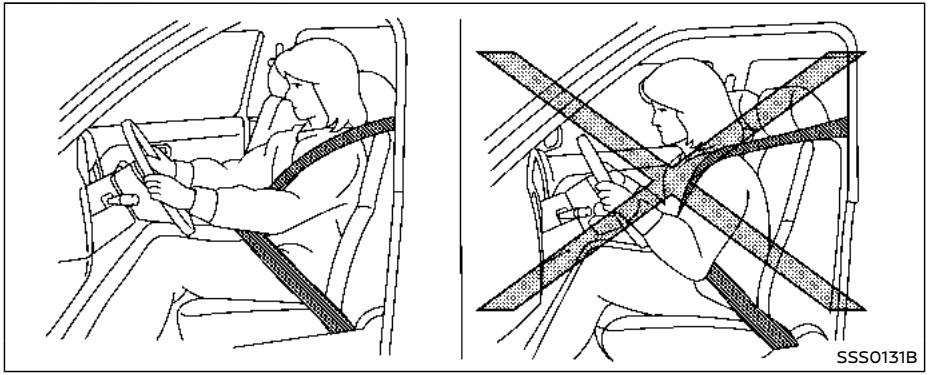


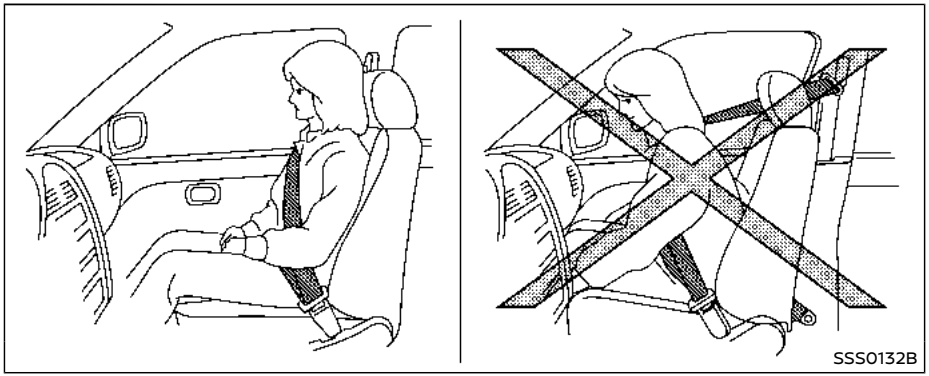


## WARNING

- **The front air bags ordinarily will not inflate in the event of a side impact, rear impact, rollover, or lower severity frontal collision. Always wear your seat belts to help reduce the risk or severity of injury in various kinds of accidents.**
- **The front passenger air bag will not inflate if the front passenger air bag status light is lit or if the front passenger seat is unoccupied. See "Front passenger air bag and status light" (P.1-38).**
- **The seat belts and the front air bags are most effective when you are sitting well back and upright in the seat with both feet on the floor. The front air bags inflate with great force. Even with the NISSAN Advanced Air Bag System, if you are unrestrained, leaning forward, sitting sideways or out of position in any way, you are at greater risk of injury or death in a crash. You may also receive serious or fatal injuries from the supplemental front air bag if you are up against it when it inflates.**

Always sit back against the seatback and as far-away as practical from the steering wheel or instrument panel. Always use the seat belts.

- The driver and front passenger seat belt buckles are equipped with sensors that detect if the seat belts are fastened. The Advanced Air Bag System monitors the severity of a collision and seat belt usage then inflates the air bags. Failure to properly wear seat belts can increase the risk or severity of injury in an accident.
- The front passenger seat is equipped with an occupant classification sensor (pattern sensor) that turns the front passenger air bag OFF under some conditions. This sensor is only used in this seat. Failure to be properly seated and wearing the seat belt can increase the risk or severity of injury in an accident. See "Front passenger air bag and status light" (P.1-38).
- Keep hands on the outside of the steering wheel. Placing them inside the steering wheel rim could increase the risk of injury if the supplemental front air bag inflates.

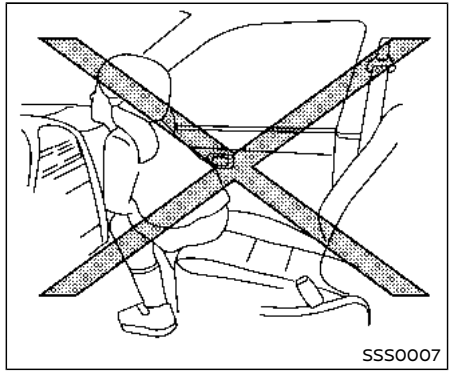


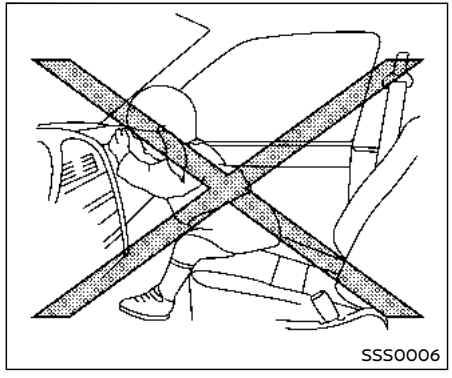

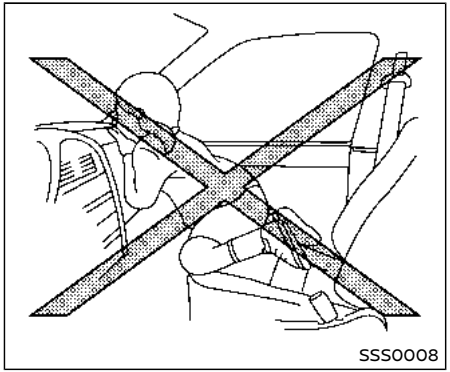
SSS0008

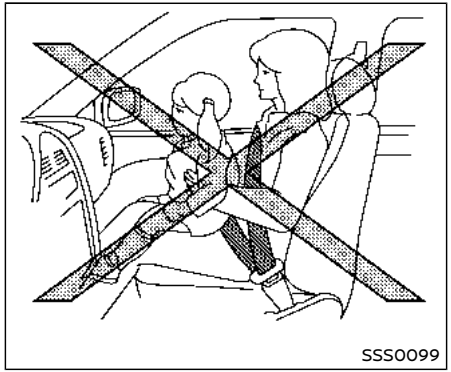
SSS0099

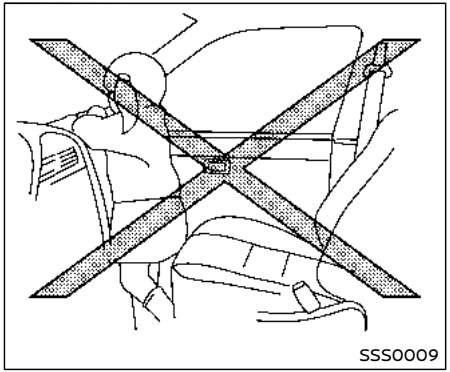
SSS0009

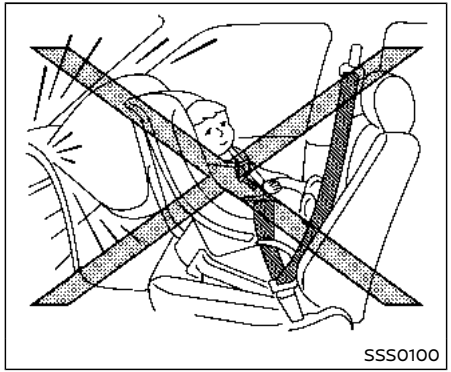
SSS0100

**WARNING**

- **Never let children ride unrestrained or extend their hands or face out of the window. Do not attempt to hold them in your lap or arms. Some examples of dangerous riding positions are shown in the illustrations.**
- **Children may be severely injured or killed when the front air bags, side air bags or curtain air bags inflate if they are not properly restrained.**
- **Even with the NISSAN Advanced Air Bag System, never install a rear-facing child restraint in the front seat. An inflating front air bag could seriously injure or kill your child. See "Child restraints" (P.1-19) for details.**

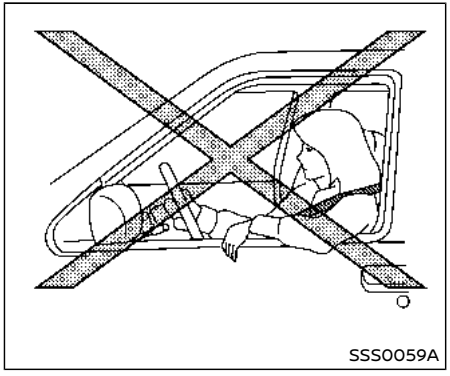
SSS0059A

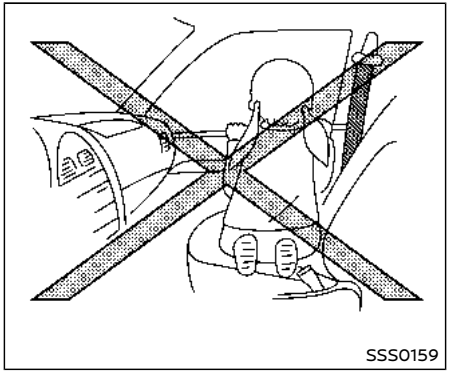
SSS0159

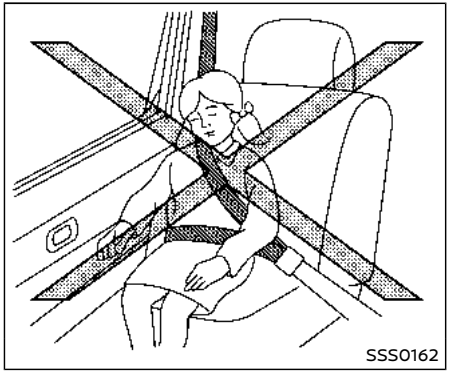
SSS0162

**WARNING**

**Front seat-mounted side-impact supplemental air bags, roof-mounted curtain side-impact and rollover supplemental air bag (Coupe models) or door-mounted curtain side-impact supplemental air bag (Roadster models):**

- **The side air bags ordinarily will not inflate in the event of a front impact, rear impact, rollover, or lower severity side collision. Always wear your seat belts to help reduce the risk or severity of injury in various kinds of accidents.**
- **The curtain air bags ordinarily will not inflate in the event of a front impact, rear impact, rollover (Coupe models) or lower severity side collision. Always wear your seat belts to help reduce the risk or severity of injury in various kinds of accidents.**
- **The seat belts, side air bags and curtain air bags are most effective when you are sitting well back and upright in the seat. The side air bag and curtain air bag inflate with great force. Do not allow anyone to place their hand, leg or face near the side air bag on the side of the seatback of the front seat or near the side roof rails (Coupe models)/door trim (Roadster models). Do not allow anyone sitting in the front seats to extend their hand out of the window or lean against the door. Some examples of dangerous riding positions are shown in the previous illustrations.**
- **Do not use seat covers on the front seatbacks. They may interfere with supplemental side air**

**bag inflation.**

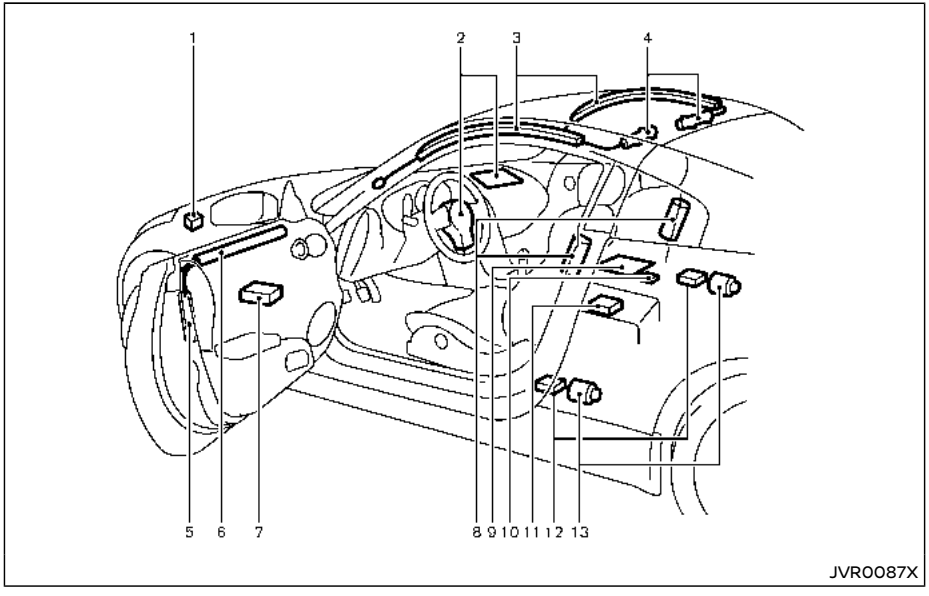


1. Crash zone sensor
2. Supplemental front air bag modules (NISSAN Advanced Air Bags)
3. Roof-mounted curtain side-impact and rollover supplemental air bags (for Coupe models)
4. Roof-mounted curtain side-impact and rollover supplemental air bag inflators (for Coupe models)
5. Door-mounted curtain side-impact supplemental air bag inflators (for Roadster models)
6. Door-mounted curtain side-impact supplemental air bags (for Roadster models)
7. Door satellite sensors
8. Front seat-mounted side-impact supplemental air bags
9. Occupant classification sensor (pattern sensor)
10. Occupant classification system control unit
11. Air bag Control Unit (ACU)
12. Satellite sensors
13. Seat belt with pretensioner

## NISSAN ADVANCED AIR BAG SYSTEM (front seats)

This vehicle is equipped with the NISSAN Advanced Air Bag System for the driver and front passenger seats. This system is designed to meet certification requirements under U.S. regulations. It is also permitted in Canada. **All of the information, cautions and warnings in this manual apply and must be followed.**

The driver supplemental front-impact air bag is located in the center of the steering wheel. The front passenger supplemental front-impact air bag is mounted in the instrument panel above the glove box. The front air bags are designed to inflate in higher severity frontal collisions, although they may inflate if the forces in another type of collision are similar to those of a higher severity frontal impact. They may not inflate in certain frontal collisions. Vehicle damage (or lack of it) is not always an indication of proper front air bag opera-

tion.

The NISSAN Advanced Air Bag System has dual stage air bag inflators. The system monitors information from the crash zone sensor, the Air bag Control Unit (ACU), seat belt buckle switches and the occupant classification sensor (pattern sensor). Inflator operation is based on the severity of a collision and seat belt usage for the driver. For the front passenger, the occupant classification sensor is also monitored. Based on information from the sensors, only one front air bag may inflate in a crash, depending on the crash severity and whether the front occupants are belted or unbelted. Additionally, the front passenger air bag may be automatically turned OFF under some conditions, depending on the information provided by the occupant classification sensor. If the front passenger air bag is OFF, the front passenger air bag status light will be illuminated (if the seat is unoccupied, the light will not be illuminated, but the air bag will be off). (See "Front passenger air bag and status light" (P.1-38) for further details.) One front air bag inflating does not indicate improper performance of the system.

If you have any questions about your air bag system, it is recommended you visit a NISSAN dealer to obtain information about the system. If you are considering modification of your vehicle due to a disability, you may also contact a NISSAN dealer. Contact information is contained in the front of this Owner's Manual.

When a front air bag inflates, a fairly loud noise may be heard, followed by release of smoke. This smoke is not harmful and does not indicate a fire. Care should be taken not to inhale it, as it may cause irritation and choking. Those with a history of a breathing condition should get fresh air promptly.

Front air bags, along with the use of seat belts, help to cushion the impact force on the head and chest of the front occupants. They can help save lives and reduce serious injuries. However, an inflating front air bag may cause facial abrasions or other injuries. Front air bags do not provide restraint to the lower body.

Even with NISSAN advanced air bags, seat belts should be correctly worn and the driver and passenger seated upright as far as practical away from the steering wheel or instrument panel. The front air bags inflate quickly in order to help protect the front occupants. Because of this, the force of the front air bag inflating can increase the risk of injury if the occupant is too close to, or is against, the air bag module during inflation.

The front air bags deflate quickly after a collision.

**The supplemental front air bags operate only when the ignition switch is in the ON position.**

**After pushing the ignition switch to the ON position, the supplemental air bag warning light illuminates. The supplemental air bag warning light will turn off after about 7 seconds if the system is operational.**

**Front passenger air bag status light**

## Front passenger air bag and status light

**WARNING**

**The front passenger air bag is designed to automatically turn OFF under some conditions. Read this section carefully to learn how it operates. Proper use of the seat, seat belt and child restraints is necessary for most effective protection. Failure to follow all instructions in this manual concerning the use of seats, seat belts and child restraints can increase the risk or severity of injury in an accident.**

**Status light:**

The front passenger air bag status light is located on the instrument panel. After the ignition switch is placed in the ON position, the front passenger air bag status light illuminates for about 7 seconds and then turns off or illuminates depending on the front passenger seat occupied status. The light operates as follows:

- Unoccupied front passenger seat: The is OFF and the front passenger air bag is OFF and will not inflate in a crash.
- Front passenger seat occupied by a small adult, child or child restraint as outlined in this section: The illuminates to indicate that the front passenger air bag is OFF and will not inflate in a crash.
- Occupied front passenger seat and the front passenger meets the conditions outlined in this section: The light is OFF to indicate that the front passenger air bag is operational.

**Front passenger air bag:**

The front passenger air bag is designed to automatically turn OFF when the vehicle is operated under some conditions as described below as permitted by U.S. regulations. If the front passenger air bag is OFF, it will not inflate in a crash. The driver air bag and other air bags in your vehicle are not part of this system.

The purpose of the regulation is to help reduce the risk of injury or death from an inflating air bag to certain front passenger seat occupants, such as children, by requiring the air bag to be automatically turned OFF.

The occupant classification sensor (pattern sensor) is in the front passenger seat cushion and is designed to detect an occupant and objects on the seat. For example, if a child is in the front passenger seat, the Advanced Air Bag System is designed to turn the front passenger air bag OFF in accordance with the regulations. Also, if a child restraint of the type specified in the regulations is on the seat, the occupant classification sensor can detect it and cause the air bag to turn OFF.

Front passenger seat adult occupants who are properly seated and using the seat belt as outlined in this manual should not cause the front passenger air

bag to be automatically turned OFF. For small adults it may be turned OFF, however, if the occupant does not sit in the seat properly (for example, by not sitting upright, by sitting on an edge of the seat, or by otherwise being out of position), this could cause the sensor to turn the air bag OFF. Always be sure to be seated and wearing the seat belt properly for the most effective protection by the seat belt and supplemental air bag.

The occupant classification sensor is designed to operate as described above to turn the front passenger air bag OFF for specified child restraints. Failing to properly secure child restrains and to use the ALR mode (child restraint mode) may allow the restraint to tip or move in an accident or sudden stop. This can also result in the front passenger air bag inflating in a crash instead of being OFF. (See "Child restraints" (P.1-19) for proper use and installation.)

If the front passenger seat is not occupied, the front passenger air bag is designed not to inflate in a crash. However, heavy objects placed on the seat could result in air bag inflation, because of the object being detected by the occupant classification sensor. Other conditions could also result in air bag inflation, such as if a child is standing on the seat, or if two children are on the seat, contrary to the instructions in this manual. Always be sure that you and all vehicle occupants are seated and restrained properly.

Using the front passenger air bag status light, you can monitor when the front passenger air bag is automatically turned OFF with the seat occupied. The light will not illuminate when the front passenger seat is unoccupied.

If an adult occupant is in the seat but the front passenger air bag status light is illuminated (indicating that the air bag is OFF), it could be that the person is a small adult, or is not sitting on the seat properly.

If a child restraint must be used in the front seat, the front passenger air bag status light may or may not be illuminated, depending on the size of the child and the type of child restraint being used. If the front passenger air bag status light is not illuminated (indicating that the air bag might inflate in a crash), it could be that the child restraint or seat belt is not being used properly. Make sure that the child restraint is installed properly, the seat belt is used properly and the occupant is positioned properly. If the front passenger air bag status light is still not illuminated, try a different child restraint.

If the front passenger air bag status light will not illuminate even though you believe that the child restraint, the seat belts and the occupant are properly positioned, the system may be sensing an unoccupied seat (in which case the air bag is OFF). Your NISSAN dealer can check that the system is OFF by using a special tool. However, until you have confirmed with your dealer that your air bag is working properly, do not transport a child in this vehicle.

The NISSAN Advanced Air Bag System and front passenger air bag status light will take a few seconds to register a change in the front passenger seat status. However, if the seat becomes unoccupied, the front passenger air bag status light will remain off.

If a malfunction occurs in the front passenger air bag system, the supplemental air bag warning light , located in the meter and gauges area will blink. Have the system checked. It is recommended you visit a NISSAN dealer for this service.

Other supplemental front-impact air bag precautions

**WARNING**

- **Do not place any objects on the steering wheel pad or on the instrument panel. Also, do not place any objects between any occupant and the steering wheel or instrument panel. Such objects may become dangerous projectiles and cause injury if the front air bag inflates.**
- **Do not place objects with sharp edges on the seat. Also, do not place heavy objects on the seat that will leave permanent impressions in the seat. Such objects can damage the seat or occupant classification sensor (pattern sensor). This can affect the operation of the air bag system and result in serious personal injury.**
- **Do not use water or acidic cleaners (hot steam cleaners) on the seat. This can damage the seat or occupant classification sensor. This can also affect the operation of the air bag system and result in serious personal injury.**
- **Immediately after inflation, several front air bag system components will be hot. Do not touch them; you may severely burn yourself.**
- **No unauthorized changes should be made to any components or wiring of the air bag system. This is to prevent accidental inflation of the supplemental air bag or damage to the supplemental air bag system.**
- **Do not make unauthorized changes to your vehicle's electrical system, suspension system or front end structure. This could affect proper operation of the front air bag system.**
- **Tampering with the front air bag system may result in serious personal injury. Tampering includes changes to the steering wheel and the instrument panel assembly by placing material over the steering wheel pad and above the instrument panel or by installing additional trim material around the air bag system.**
- **Modifying or tampering with the front passenger seat may result in serious personal injury. For example, do not change the front seats by placing material on the seat cushion or by installing additional trim material, such as seat covers, on the seat that is not specifically designed to assure proper air bag operation. Additionally, do not stow any objects under the front passenger seat or the seat cushion and seatback. Such objects may interfere with the proper operation of the occupant classification sensor.**
- **No unauthorized changes should be made to any components or wiring of the seat belt system. This may affect the front air bag system. Tampering with the seat belt system may result in serious personal injury.**
- **It is recommended you visit a NISSAN dealer for work on and around the front air bag. It is also recommended you visit a NISSAN dealer for installation of electrical equipment. The Supplemental Restraint System (SRS) wiring harnesses* should not be modified or disconnected. Unauthorized electrical test equipment and probing devices should not**

**be used on the air bag system.**

- **A cracked windshield should be replaced immediately by a qualified repair facility. A cracked windshield could affect the function of the supplemental air bag system.**

* **The SRS wiring harness connectors are yellow and orange for easy identification.**

When selling your vehicle, we request that you inform the buyer about the front air bag system and guide the buyer to the appropriate sections in this Owner's Manual.

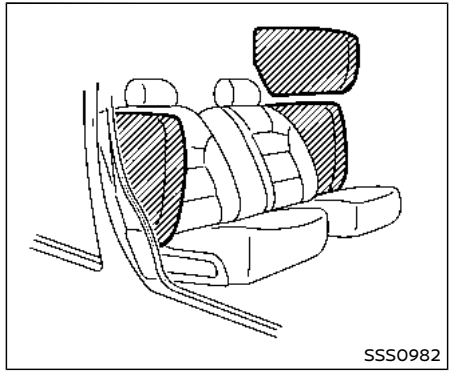


## FRONT SEAT-MOUNTED SIDE-IMPACT AND ROOF/DOOR-MOUNTED CURTAIN SIDE-IMPACT AND ROLLOVER (if so equipped) SUPPLEMENTAL AIR BAG SYSTEMS

The side air bags are located in the outside of the seatback of the front seats. The curtain air bags are located in the side roof rails (Coupe) or upper side of the door trim (Roadster). **All of the information, cautions and warnings in this manual apply and must be followed.** The side air bags and curtain air bags are designed to inflate in higher severity side collisions, although they may inflate if the forces in another type of collision are similar to those of a higher severity side impact. They are designed to inflate on the side where the vehicle is impacted. They may not inflate in certain side collisions.

Roof-mounted curtain air bags are also designed to inflate in certain types of rollover collisions or near rollovers (Coupe models). As a result, certain vehicle movements may cause the curtain air bags to inflate.

Vehicle damage (or lack of it) is not always an indication of proper supplemental side air bag and curtain air bag operation.

When side air bags and curtain air bags inflate, a fairly loud noise may be heard, followed by release of smoke. This smoke is not harmful and does not indicate a fire. Care should be taken not to inhale it, as it may cause irritation and choking. Those with a history of a breathing condition should get fresh air promptly.

Side air bags, along with the use of seat belts, help to cushion the impact force on the chest and pelvis of the front occupants. Curtain air bags help to cushion the impact force to the head of occupants. They can help save lives and reduce serious injuries. However, inflating side air bags and curtain air bags may cause abrasions or other injuries. Side air

bags and curtain air bags do not provide restraint to the lower body.

The seat belts should be correctly worn and the driver and passenger seated upright as far as practical away from the side air bag, and seated as far away as practical from the door finishers and side roof rails. The side air bags and curtain air bags inflate quickly in order to help protect the occupants. Because of this, the force of the side air bags and curtain air bags inflating can increase the risk of injury if the occupant is too close to, or is against, these air bag modules during inflation. The side air bags and curtain air bags will remain inflated for a short period of time. For Coupe models, in a rollover, the curtain air bags on both side-impact situations, the curtain air bags will remain inflated for a short period of time.

**The side air bags and curtain air bags operate only when the ignition switch is in the ON position**.

**After placing the ignition switch in the ON position, the supplemental air bag warning light illuminates. The air bag warning light will turn off after about 7 seconds if the systems are operational.**

**WARNING**

- **Do not place any objects near the seatback of the front seats. Also, do not place any objects (an umbrella, bag, etc.) between the front door finisher and the front seat. Such objects may become dangerous projectiles and cause injury if a side air bag inflates.**
- **Right after inflation, several side air bags and curtain air bag system components will be hot. Do not touch them; you may severely burn yourself.**
- **No unauthorized changes should be made to any components or wiring of side air bag and curtain air bag systems. This is to prevent accidental inflation of the side air bag and curtain air bag or damage to side air bag and curtain air bag systems.**
- **Do not make unauthorized changes to your vehicle's electrical system, suspension system or side panel. This could affect proper operation of the side air bag and curtain air bag systems.**
- **Tampering with the air bag system may result in serious personal injury. For example, do not change the front seats by placing material near the seatback or by installing additional trim material, such as seat covers, around the side air bags.**
- **It is recommended you visit a NISSAN dealer for work on and around the pretensioner system. It is also recommended you visit a NISSAN dealer for installation of electrical equipment. The SRS wiring harnesses* should not be modified or disconnected. Unauthorized electrical test equipment and probing devices should not be used on the side-impact air bag system.**

* **The SRS wiring harness connectors are yellow and orange for easy identification.**

When selling your vehicle, we request that you inform the buyer about the side air bag and curtain air bag systems and guide the buyer to the appropriate sections in this Owner's Manual.

## SEAT BELTS WITH PRETENSIONERS (front seats)

**WARNING**

- **The pretensioners cannot be reused after activation. They must be replaced together with the retractor and buckle as a unit.**
- **If the vehicle becomes involved in a collision but a pretensioner is not activated, be sure to have the pretensioner system checked and, if necessary, replaced. It is recommended you visit a NISSAN dealer for this service.**
- **No unauthorized changes should be made to any components or wiring of the pretensioner system. This is to prevent damage to or accidental activation of the pretensioners. Tampering with the pretensioner system may result in serious personal injury.**
- **It is recommended you visit a NISSAN dealer for work on and around the pretensioner system. It is also recommended you visit a NISSAN dealer for installation of electrical equipment. Unauthorized electrical test equipment and probing devices should not be used on the pretensioner system.**
- **If you need to dispose of the pretensioner or scrap the vehicle, it is recommended you visit a NISSAN dealer for this service. Correct pretensioner disposal procedures are set forth in the appropriate NISSAN Service Manual. Incorrect disposal procedures could cause personal injury.**

The pretensioner system may activate with the supplemental air bag system in certain types of collisions. Working with the seat belt retractor, it helps tighten the seat belt when the vehicle becomes involved in certain types of collisions, helping to restrain front seat occupants.

The pretensioner is encased with the seat belt retractor. These seat belts are used the same way as conventional seat belts.

When a pretensioner seat belt activates, smoke is released and a loud noise may be heard. The smoke is not harmful, and it does not indicate a fire. Care should be taken not to inhale it as it may cause irritation and choking. Those with a history of a breathing condition should get fresh air promptly.

After pretensioner activation, load limiters allow the seat belt to release webbing (if necessary) to reduce forces against the chest.

The supplemental air bag warning light is used to indicate malfunctions in the pretensioner system. (See "Supplemental air bag warning light" (P.1-44) for more details.) If the operation of the supplemental air bag warning light indicates there is a malfunction, have the system checked. It is recommended you visit a NISSAN dealer for this service.

When selling your vehicle, we request that you inform the buyer about the seat belt pretensioners and guide the buyer to the appropriate sections in this Owner's Manual.

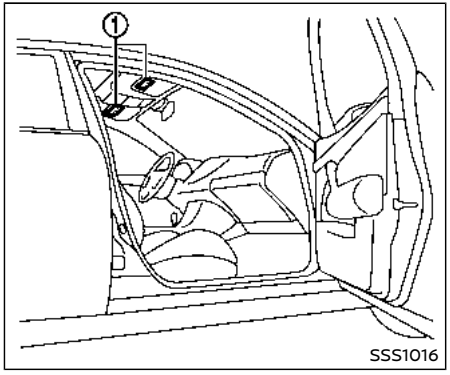


## SUPPLEMENTAL AIR BAG WARNING LABELS

Warning labels about the supplemental front-impact air bag are placed in the vehicle as shown in the illustration.

① SRS air bag

The warning labels are located on the surface of the sun visors.

**WARNING**

**Do not use a rear-facing child restraint on a seat protected by an air bag in front of it. If the air bag deploys, it may cause serious injury or death.**

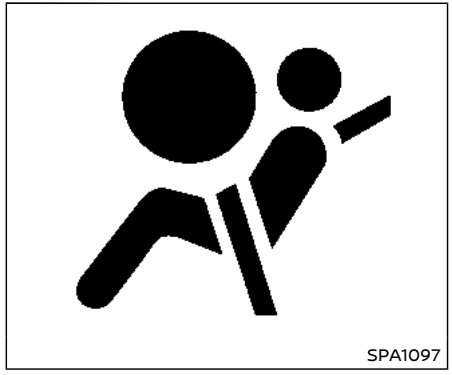


## SUPPLEMENTAL AIR BAG WARNING LIGHT

The supplemental air bag warning light, displaying in the instrument panel, monitors the circuits for the air bag systems, pretensioners and all related wiring.

When the ignition switch is in the ON position, the supplemental air bag warning light illuminates for about 7 seconds and then turns off. This means the system is operational.

If any of the following conditions occur, the air bag and/or pretensioner systems need servicing:

- The supplemental air bag warning light remains on after approximately 7 seconds.
- The supplemental air bag warning light flashes intermittently.
- The supplemental air bag warning light does not come on at all.

Under these conditions, the air bag and/or pretensioner systems may not operate properly. They must be checked and repaired. It is recommended you visit a NISSAN dealer for this service.

**WARNING**

**If the supplemental air bag warning light is on, it could mean that the front air bag, side air bag, curtain air bag and/or pretensioner systems will not operate in an accident. To help avoid injury to yourself or others, have your vehicle checked as soon as possible. It is recommended you visit a NISSAN dealer for this service.**

## REPAIR AND REPLACEMENT PROCEDURE

The front air bags, side air bags, curtain air bags and pretensioners are designed to activate on a one-time-only basis. As a reminder, unless it is damaged, the supplemental air bag warning light will remain illuminated after inflation has occurred. These systems should be repaired and/or replaced as soon as possible. It is recommended you visit a NISSAN dealer for this service.

When maintenance work is required on the vehicle, the front air bags, side air bags, curtain air bags, pretensioners and related parts should be pointed out to the person conducting the maintenance. The ignition switch should always be in the LOCK position when working under the hood or inside the vehicle.

**WARNING**

- **Once a front air bag, side air bag, or curtain air bag has inflated, the air bag module will not function again and must be replaced. Additionally, the activated pretensioner must also be replaced. The air bag module and pretensioner system should be replaced. It is recommended you visit a NISSAN dealer for this service. The air bag module and pretensioner system cannot be repaired.**
- **The front air bag, side air bag and curtain air bag systems and the pretensioner system should be inspected if there is any damage to the front end or side portion of the vehicle. It is recommended you visit a NISSAN dealer for this service.**
- **If you need to dispose of the supplemental air bag or pretensioner systems or scrap the vehicle, it is recommended you visit a NISSAN dealer. Correct supplemental air bag and seat belt pretensioner system disposal procedures are set forth in the appropriate NISSAN Service Manual. Incorrect disposal procedures could cause personal injury.**

**MEMO**

# 2 Instruments and controls


Cockpit ..... 2-3
Instrument panel ..... 2-4
Meters and gauges ..... 2-5
Speedometer and odometer ..... 2-6
Tachometer ..... 2-7
Engine coolant temperature gauge ..... 2-7
Fuel gauge ..... 2-8
Triple meter ..... 2-8
Warning lights, indicator lights and audible reminders ..... 2-10
Checking lights ..... 2-11
Warning lights ..... 2-11
Indicator lights ..... 2-15
Audible reminders ..... 2-18
Vehicle information display ..... 2-19
Operational indicators ..... 2-19
Warnings and alerts ..... 2-21
Maintenance indicators ..... 2-23
Trip computer ..... 2-23
Security systems ..... 2-29
Vehicle Security System ..... 2-29
NISSAN Vehicle Immobilizer System ..... 2-30
Wiper and washer switch ..... 2-32
Rear window defroster switch ..... 2-33
Headlight and turn signal switch ..... 2-34
Xenon headlights ..... 2-34
Headlight switch ..... 2-34
Turn signal switch ..... 2-37
Fog light switch (if so equipped) ..... 2-38
Horn ..... 2-38
Heated seats (if so equipped) ..... 2-38
Climate controlled seats (if so equipped) ..... 2-40
Vehicle Dynamic Control (VDC) OFF switch ..... 2-41
Power outlet ..... 2-42
Storage ..... 2-43
Instrument pocket (except for navigation system equipped models) ..... 2-43
Cup holders ..... 2-43
Glove box ..... 2-44
Console box ..... 2-44
Rear parcel box ..... 2-45
Cargo cover (if so equipped) ..... 2-45
Windows ..... 2-46
Power windows ..... 2-46
Interior lights ..... 2-50
Map lights ..... 2-50
Interior light control switch ..... 2-50
Vanity mirror lights ..... 2-51

Cargo area courtesy light (Roadster models) ..... 2-51
Cargo light (Coupe models) ..... 2-52
Trunk light (Roadster models) ..... 2-52
HomeLink® Universal Transceiver (if so equipped) ..... 2-52
Programming HomeLink® ..... 2-53
Programming HomeLink® for Canadian customers and gate openers ..... 2-54
Operating the HomeLink® Universal Transceiver ..... 2-55
Programming troubleshooting ..... 2-55
Clearing the programmed information ..... 2-55
Reprogramming a single HomeLink® button ..... 2-55
If your vehicle is stolen ..... 2-56

## COCKPIT

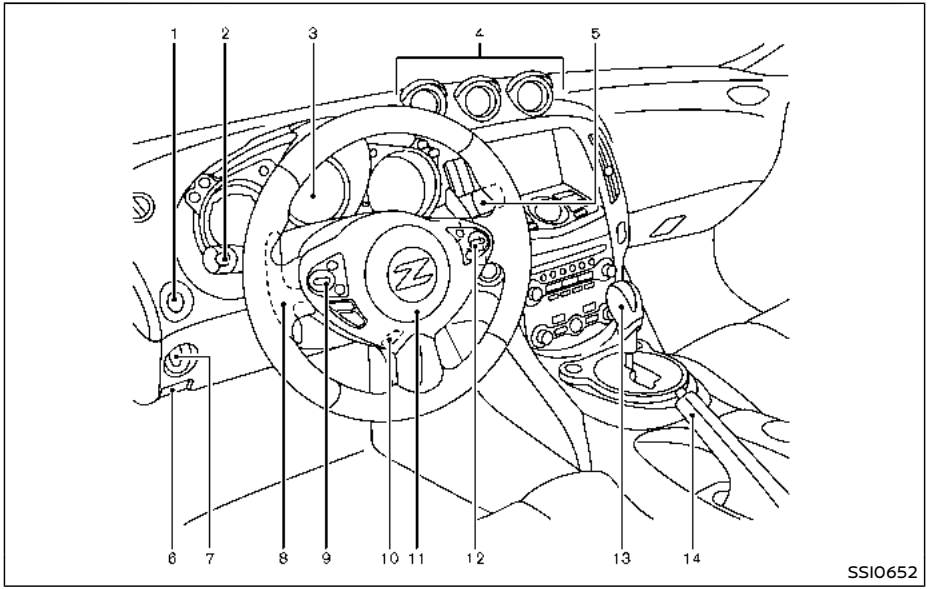


1. Vehicle Dynamic Control (VDC) OFF switch (P.5-30)
2. Headlight, fog light and turn signal switch (P.2-34)
3. Meters and Gauges (combimeter) (P.2-5)
4. Triple meter (P.2-8)
5. Wiper and washer switch (P.2-32)
6. Hood release handle (P.3-17)
7. Intelligent Key port (P.5-10)
8. Paddle shifter (if so equipped) (P.5-14)
9. Steering-wheel-mounted controls (left side)
   — Menu control switch or tuning switch (P.4-73)
   — BACK switch (P.4-73)
   — Phone switch (if so equipped) (P.4-76)
   — Volume control switches (P.4-73)
   — Source select switch (P.4-73)
10. Tilt steering lever (P.3-38)
11. Steering wheel
    — Horn (P.2-38)
    — Driver supplemental air bag (P.1-30)
12. Steering-wheel-mounted controls (right side)
    — Cruise control switches (P.5-22)
13. Shift lever
    — Automatic Transmission (AT) (P.5-12)
    — Manual Transmission (MT) (P.5-17)
14. Parking brake (P.5-21)

## INSTRUMENT PANEL

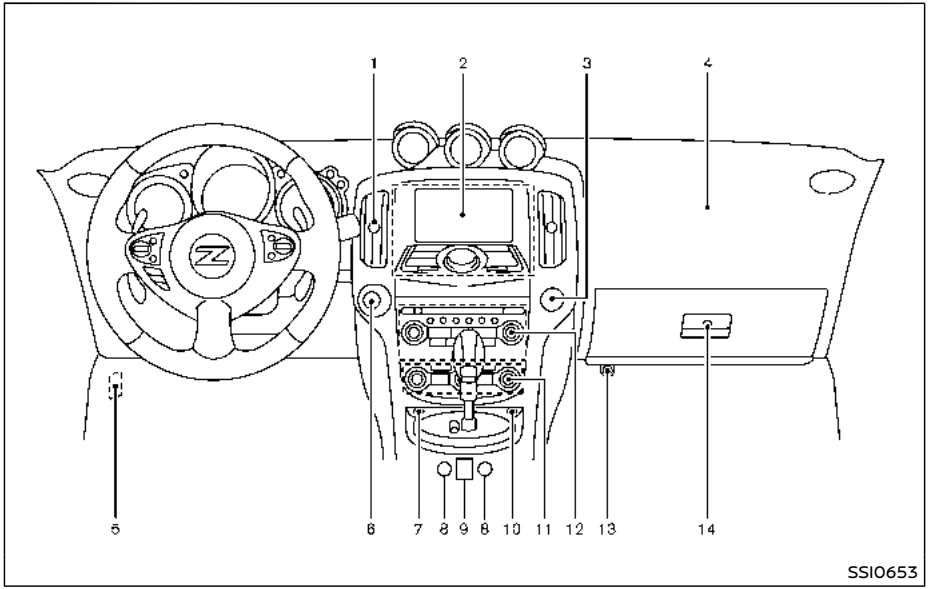


1. Ventilator (P.4-24)
2. Center display and multi-function control panel (if so equipped) (P.4-4) or Instrument pocket (if so equipped) (P.2-43)
   — Navigation system* (if so equipped)
   — Vehicle information and setting buttons (if so equipped) (P.4-8)
   — Bluetooth® Hands-Free Phone System (if so equipped) (P.4-76, P.4-86)
3. Front passenger air bag status light (P.1-36)
4. Front passenger supplemental air bag (P.1-30)
5. Fuse box cover (P.8-18)
6. Push-button ignition switch (P.5-8)
7. Hazard warning flasher switch (P.6-2)
8. Seat heater switch (if so equipped) (P.2-38) or Climate controlled seat switch (if so equipped) (P.2-40)
9. Soft top operating switch (for Roadster models) (P.3-23) or Rear hatch release switch (for Coupe models) (P.3-19)
10. SynchroRev Match mode (S-MODE) switch (if so equipped) (P.5-18)
11. Heater and air conditioner (P.4-25)
    — Rear window defroster switch (P.2-33)
12. Audio system (P.4-30)
13. Power outlet (P.2-42)
14. Glove box (P.2-44)

*: Refer to the separate Navigation System Owner's Manual.

## METERS AND GAUGES

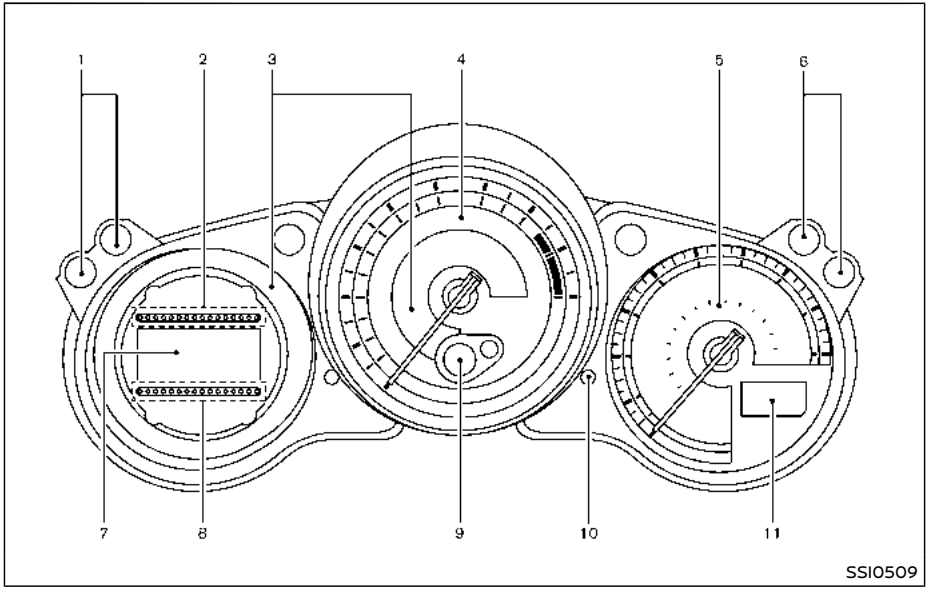


1. ENTER/NEXT switch (P.2-23)
2. Fuel gauge (P.2-8)
3. Warning/Indicator lights (P.2-10)
4. Tachometer (P.2-7)
5. Speedometer (P.2-6)
6. Instrument brightness control switch (P.2-37)
7. Vehicle information display (P.2-19)
8. Engine coolant temperature gauge (P.2-7)
9. Transmission position indicator (if so equipped) (P.2-18)

   — SynchroRev Match mode (S-MODE) indicator (if so equipped) (P.5-18)

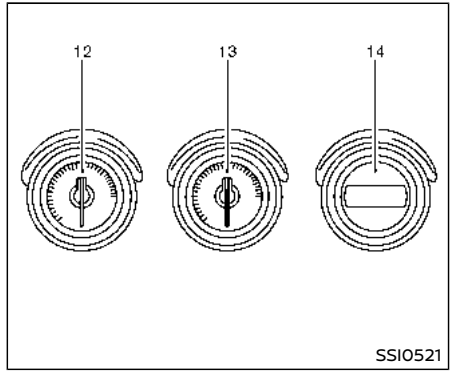


10. Odometer/Twin trip odometer control knob (P.2-6)
11. Odometer/Twin trip odometer (P.2-6)
12. Engine oil temperature gauge (P.2-8)
13. Voltmeter (P.2-9)
14. Clock (P.2-9, P.2-27)

**CAUTION**

- **For cleaning, use a soft cloth, dampened with water. Never use a rough cloth, alcohol, benzine, thinner or any kind of solvent or paper towel with a chemical cleaning agent. They will scratch or cause discoloration to the lens.**

- **Do not spray any liquid such as water on the meter lens. Spraying liquid may cause the system to malfunction.**

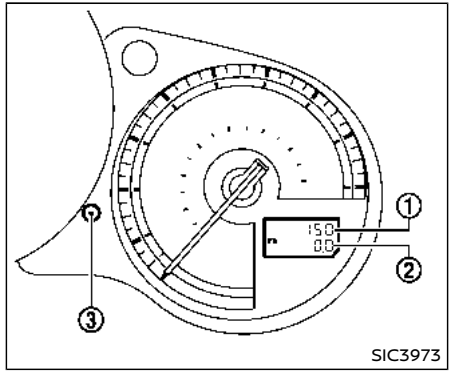


## SPEEDOMETER AND ODOMETER

### Speedometer

The speedometer indicates vehicle speed in miles per hour (MPH) and kilometers per hour (km/h).

### Odometer/twin trip odometer

The odometer ① and twin trip odometer ② are displayed when the ignition switch is in the ON position.

The odometer records the total distance the vehicle has been driven.

The twin trip odometer records the distance of individual trips.

**Changing the display:**

Pushing the TRIP A/B RESET knob ③ changes the display as follows:

TRIP A → TRIP B → TRIP A

**Resetting the trip odometer:**

Pushing the TRIP A/B RESET knob ③ for more than 1 second resets the trip odometer to zero.

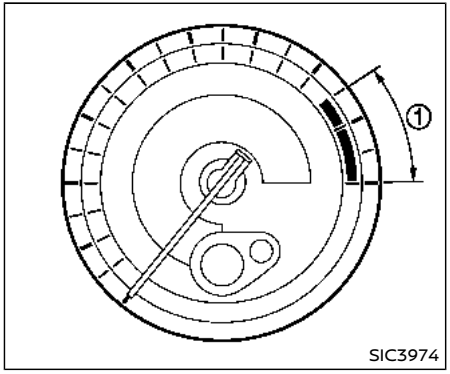


## TACHOMETER

The tachometer indicates engine speed in revolutions per minute (RPM). **Do not rev the engine into the red zone ①.**

**CAUTION**

**When engine speed approaches the red zone, shift to a higher gear or reduce engine speed. Operating the engine in the red zone may cause serious engine damage.**

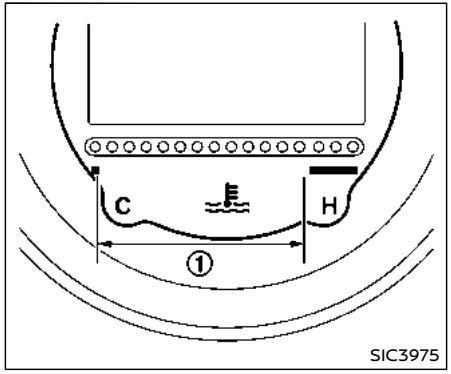


## ENGINE COOLANT TEMPERATURE GAUGE

The gauge indicates the engine coolant temperature.

The engine coolant temperature is within the normal range when the gauge points within the zone ① shown in the illustration.

The engine coolant temperature varies with the outside air temperature and driving conditions.

**CAUTION**

**If the gauge indicates engine coolant temperature near the hot (H) end of the normal range, reduce vehicle speed to decrease temperature. If gauge is over the normal range, stop the vehicle as soon as safely possible. If the engine is overheated, continued operation of the vehicle may seriously damage the engine. See "If your vehicle overheats" (P.6-17) for immediate action required.**

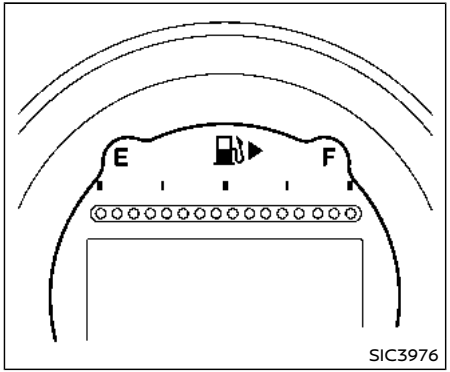


## FUEL GAUGE

The gauge indicates the **approximate** fuel level in the tank.

The gauge may move slightly during braking, turning, acceleration, or going up or down hills.

**Refill the fuel tank before the gauge registers "E" (Empty).**

The low fuel warning appears on the vehicle information display when the amount of fuel in the tank is getting low. Refuel as soon as it is convenient, preferably before the gauge reaches "E". There will be a small reserve of fuel in the tank when the fuel gauge reaches "E".

The indicates that the fuel-filler door is located on the passenger's side of the vehicle.

### CAUTION

- **If the vehicle runs out of fuel, the SERVICE ENGINE SOON malfunction indicator light (MIL) may come on. Refuel as soon as possible. After a few driving trips, the SERVICE ENGINE SOON light should turn off. If the light remains on after a few driving trips, have the vehicle inspected. It is recommended you visit a NISSAN dealer for this service.**
- **For additional information, see "Malfunction Indicator Light (MIL)" (P.2-16).**

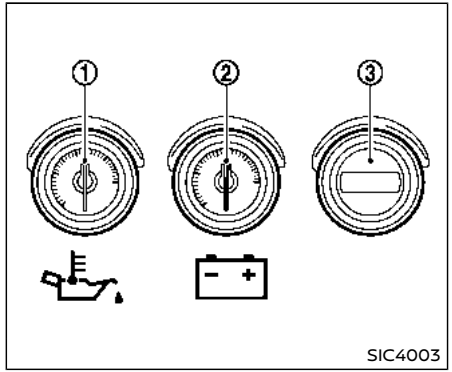


**Triple meter**

1. Engine oil temperature gauge
2. Voltmeter
3. Clock

## TRIPLE METER

### Engine oil temperature gauge

**Oil temperature, as well as the rate of temperature change, will vary based on ambient conditions and driving patterns. Under normal operating conditions, oil temperature will remain below 280°F (140°C).**

**If the engine oil temperature gauge ① indicates more than 280°F (140°C) while driving, reduce the engine speed (RPM).**

**When the engine oil temperature is high, the engine protection mode, which helps reduce the chance of engine damage, could activate and automatically decrease engine power.**

## Voltmeter

When the ignition switch is placed in the ON position, the volt meter ② indicates the battery voltage. When the engine is running, it indicates the generator voltage.

While cranking the engine, the volts drop below the normal range. If the needle is not in the normal range (11 to 15 volts) while the engine is running, it may indicate that the charging system is not functioning properly. Have the system checked. It is recommended you visit a NISSAN dealer for this service.

## Clock

If necessary, adjust the clock ③ on the vehicle information display. (See "Clock" (P.2-27).)

If the power supply is disconnected, the clock will not indicate the correct time. Readjust the time.

## WARNING LIGHTS, INDICATOR LIGHTS AND AUDIBLE REMINDERS

| | | | | | |
|---|---|---|---|---|---|
| ABS | Anti-lock Braking System (ABS) warning light | | Master warning light | | Rear fog light indicator light (if so equipped) |
| | | | Seat belt warning light and chime | | Security indicator light |
| A T CHECK | Automatic Transmission check warning light (if so equipped) | | Supplemental air bag warning light | | Soft top indicator light (Roadster models) |
| BRAKE | Brake warning light | | Vehicle Dynamic Control (VDC) warning light | S | SynchroRev Match mode (S-MODE) indicator (if so equipped) |
| | | CRUISE | Cruise indicator light | N/I M | Transmission position indicator (if so equipped) |
| | Charge warning light | | Exterior light indicator | | Turn signal/hazard indicator lights |
| | Engine oil pressure warning light | OFF | Front passenger air bag status light | OFF | Vehicle Dynamic Control (VDC) off indicator light |
| KEY | Intelligent Key system warning light | | High beam indicator light | | |
| | Low tire pressure warning light | SERVICE ENGINE SOON | Malfunction Indicator Light (MIL) | | |

## CHECKING LIGHTS

With all doors closed, apply the parking brake, fasten the seat belts and place the ignition switch in the ON position without starting the engine. The following lights (if so equipped) will come on:

, BRAKE or , , SERVICE ENGINE SOON

The following lights (if so equipped) come on briefly and then go off:

, ABS or , AT CHECK, , , , KEY

If any light does not come on or operates in a way other than described, it may indicate a burned-out bulb and/or a system malfunction. It is recommended you have the system checked by a NISSAN dealer.

Some indicators and warnings are also displayed on the vehicle information display. (See "Vehicle information display" (P.2-19).)

## WARNING LIGHTS

### ABS or Anti-lock Braking System (ABS) warning light

When the ignition switch is in the ON position, the Anti-lock Braking System (ABS) warning light illuminates and then turns off. This indicates the ABS is operational.

If the ABS warning light illuminates while the engine is running, or while driving, it may indicate the ABS is not functioning properly. Have the system checked. It is recommended you visit a NISSAN dealer for this service.

If an ABS malfunction occurs, the anti-lock function is turned off. The brake system then operates normally, but without anti-lock assistance. (See "Brake system" (P.5-27).)

### AT CHECK Automatic transmission check warning light (if so equipped)

When the ignition switch is pushed to the ON position, the light comes on for 2 seconds. If the light comes on at any other time, it may indicate the transmission is not functioning properly. It is recommended you visit a NISSAN dealer to check and repair the transmission.

### BRAKE or Brake warning light

This light functions for both the parking brake and the foot brake systems.

**Parking brake indicator:**

When the ignition switch is in the ON position, the light comes on when the parking brake is applied.

**Low brake fluid warning light:**

When the ignition switch is in the ON position, the light warns of a low brake fluid level. If the light comes on while the engine is running with the parking brake not applied, stop the vehicle and perform the following:

1. Check the brake fluid level. Add brake fluid as necessary. (See "Brake and clutch fluid" (P.8-9).)
2. If the brake fluid level is correct, have the warning system checked. It is recommended you have this service performed by a NISSAN dealer.

**Anti-lock Braking System (ABS) warning indicator:**

When the parking brake is released and the brake fluid level is sufficient, if both the brake warning light and the Anti-lock Braking System (ABS) warning light illuminate, it may indicate the ABS is not functioning properly. Have the brake

system checked, and if necessary repaired. It is recommended you visit a NISSAN dealer for this service. (See "Anti-lock Braking System (ABS) warning light" (P.2-11).)

**WARNING**

- **Your brake system may not be working properly if the warning light is on. Driving could be dangerous. If you judge it to be safe, drive carefully to the nearest service station for repairs. Otherwise, have your vehicle towed because driving it could be dangerous.**
- **Pressing the brake pedal with the engine stopped and/or low brake fluid level may increase your stopping distance and braking will require greater pedal effort as well as pedal travel.**
- **If the brake fluid level is below the minimum or MIN mark on the brake fluid reservoir, do not drive until the brake system has been checked. It is recommended you visit a NISSAN dealer for this service.**

### Charge warning light

If the light comes on while the engine is running, it may indicate the charging system is not functioning properly. Turn the engine off and check the alternator belt. If the belt is loose, broken, missing or if the light remains on, have your vehicle serviced immediately. It is recommended you visit a NISSAN dealer for this service.

**CAUTION**

**Do not continue driving if the alternator belt is loose, broken or missing.**

### Engine oil pressure warning light

This light warns of low engine oil pressure. If the light flickers or comes on during normal driving, pull off the road in a safe area, stop the engine **immediately** and call a NISSAN dealer or other authorized repair shop.

**The engine oil pressure warning light is not designed to indicate a low oil level. Use the dipstick to check the oil level.** (See "Engine oil" (P.8-6).)

**CAUTION**

**Running the engine with the engine oil pressure warning light on could cause serious damage to the engine almost immediately. Such damage is not covered by warranty. Turn off the engine as soon as it is safe to do so.**

### Intelligent Key system warning light

After the ignition switch is pushed to the ON position, this light comes on for about 2 seconds and then turns off.

This light warns of a malfunction with the Intelligent Key system.

If the light comes on while the engine is stopped, it may be impossible to start the engine. If the light comes on while the engine is running, you can drive the vehicle. However in these cases, it is recommended you visit a NISSAN dealer for repair as soon as possible.

## Low tire pressure warning light

Your vehicle is equipped with a Tire Pressure Monitoring System (TPMS) that monitors the tire pressure of all tires except the spare.

The low tire pressure warning light warns of low tire pressure or indicates that the TPMS is not functioning properly.

After the ignition switch is pushed ON, this light illuminates for about 1 second and turns off.

**Low tire pressure warning:**

If the vehicle is being driven with low tire pressure, the warning light will illuminate.

A CHECK TIRE PRESSURE warning also appears in the vehicle information display.

When the low tire pressure warning light illuminates, you should stop and adjust the tire pressure to the recommended COLD tire pressure shown on the Tire and Loading Information label. The low tire pressure warning light does not automatically turn off when the tire pressure is adjusted. After the tire is inflated to the recommended pressure, the vehicle must be driven at speeds above 16 MPH (25 km/h) to activate the TPMS and turn off the low tire pressure warning light. Use a tire pressure gauge to check the tire pressure.

The CHECK TIRE PRESSURE warning appears each time the ignition switch is placed in the ON position as long as the low tire pressure warning light remains illuminated.

For additional information, see "Vehicle information display" (P.2-19), "Tire Pressure Monitoring System (TPMS)" (P.5-3) and "Tire Pressure Monitoring System (TPMS)" (P.6-3).

**TPMS malfunction:**

If the TPMS is not functioning properly, the low tire pressure warning light will flash for approximately 1 minute when the ignition switch is pushed ON. The light will remain on after the 1 minute. Have the system checked. It is recommended you visit a NISSAN dealer for this service.

The CHECK TIRE PRESSURE warning does not appear if the low tire pressure warning light illuminates to indicate a TPMS malfunction.

For additional information, see "Tire Pressure Monitoring System (TPMS)" (P.5-3).

**WARNING**

- **If the light does not illuminate with the ignition switch pushed ON, have the vehicle checked as soon as possible. It is recommended you visit a NISSAN dealer for this service.**
- **If the light illuminates while driving, avoid sudden steering maneuvers or abrupt braking, reduce vehicle speed, pull off the road to a safe location and stop the vehicle as soon as possible. Driving with under-inflated tires may permanently damage the tires and increase the likelihood of tire failure. Serious vehicle damage could occur and may lead to an accident and could result in serious personal injury. Check the tire pressure for all four tires. Adjust the tire pressure to the recommended COLD tire pressure shown on the Tire and Loading Information label to turn the low tire pressure warning light OFF. If the light still illuminates while driving after adjusting the tire pressure, a tire may be flat or the TPMS may be malfunctioning.**

**If you have a flat tire, replace it with a spare tire (if so equipped) or repair it with the tire puncture repair kit (if so equipped) as soon as possible. If no tire is flat and all tires are properly inflated, it is recommended you consult a NISSAN dealer.**

- **Since the spare tire is not equipped with the TPMS, when a spare tire is mounted or a wheel is replaced, the TPMS will not function and the low tire pressure warning light will flash for approximately 1 minute. The light will remain on after the 1 minute. Have your tires replaced and/or TPMS system reset as soon as possible. It is recommended you visit a NISSAN dealer for these services.**
- **Replacing tires with those not originally specified by NISSAN could affect the proper operation of the TPMS.**

**CAUTION**

- **The TPMS is not a substitute for the regular tire pressure check. Be sure to check the tire pressure regularly.**
- **If the vehicle is being driven at speeds of less than 16 MPH (25 km/h), the TPMS may not operate correctly.**
- **Be sure to install the specified size of tires to the four wheels correctly.**

## Master warning light

When the ignition switch is in the ON position, the master warning light illuminates if any of the following are displayed on the vehicle information display:

- No key warning
- Low fuel warning
- Low washer fluid warning
- Parking brake release warning
- Door/rear hatch/trunk open warning
- Loose fuel cap warning
- Check tire pressure warning
- Extended storage fuse warning

See "Vehicle information display" (P.2-19).

## Seat belt warning light and chime

The light and chime remind you to fasten seat belts. The light illuminates whenever the ignition switch is pushed to the ON position, and will remain illuminated until the driver's seat belt is fastened. At the same time, the chime will sound for about 6 seconds unless the driver's seat belt is securely fastened.

The seat belt warning light for the front passenger will illuminate if the seat belt is not fastened when the front passenger's seat is occupied. For approximately 5 seconds after the ignition switch is in the ON position, the system does not activate the warning light for the front passenger.

See "Seat belts" (P.1-10) for precautions on seat belt usage.

## Supplemental air bag warning light

After pushing the ignition switch to the ON position, the supplemental air bag warning light will illuminate. The air bag warning light will turn off after about 7 seconds if the front air bag, side air bag and curtain air bag systems and/or pre-tensioner system are operational.

If any of the following conditions occur, the front air bag, side air bag and curtain air bag systems and/or pretensioner system need servicing.

- The supplemental air bag warning light remains on after approximately 7 seconds.
- The supplemental air bag warning light flashes intermittently.
- The supplemental air bag warning light does not come on at all.

It is recommended you visit a NISSAN dealer for these services.

Unless checked and repaired, the Supplemental Restraint Systems and/or the pretensioner seat belt may not function properly.

For additional information, see "Supplemental restraint system" (P.1-30).

**WARNING**

**If the supplemental air bag warning light is on, it could mean that the front air bag, side air bag and curtain air bag systems and/or pretensioner system will not operate in an accident. To help avoid injury to yourself or others, have your vehicle checked. It is recommended you visit a NISSAN dealer for this service.**

### Vehicle Dynamic Control (VDC) warning light

When the ignition switch is in the ON position, the Vehicle Dynamic Control (VDC) warning light illuminates and then turns off.

The light will blink when the VDC system or the traction control system is operating, thus alerting the driver that the vehicle is nearing its traction limits. The road surface may be slippery.

When the VDC warning light illuminates when the VDC system is turned on, this light alerts the driver to the fact that the VDC system's fail-safe mode is operating, for example the VDC system may not be functioning properly. Have the system checked. It is recommended you visit a NISSAN dealer for this service. If a malfunction occurs in the system, the VDC system function will be canceled but the vehicle is still driveable. For additional information, see "Vehicle Dynamic Control (VDC) system" (P.5-30) of this manual.

## INDICATOR LIGHTS

### Cruise indicator light

**Cruise main switch indicator:**

This light illuminates when the cruise control main switch is pushed. The light turns off when the main switch is pushed again. When the cruise main switch indicator light illuminates, the cruise control system is operational. (See "Cruise control" (P.5-22).)

**Cruise malfunction:**

If the cruise indicator light blinks while the engine is running, it may indicate the cruise control system is not functioning properly. Have the system checked. It is recommended you visit a NISSAN dealer for this service. (See "Cruise control" (P.5-22).)

### Exterior light indicator

This indicator illuminates when the headlight switch is turned to the AUTO, or position and the front parking lights, instrument panel lights, rear combination lights, license plate lights or headlights are on. The indicator turns off when these lights are turned off.

## Front passenger air bag status light

The front passenger air bag status light (OFF), located on the center of the instrument panel, will be lit and the passenger front air bag will be OFF depending on how the front passenger seat is being used.

For front passenger air bag status light operation, see "NISSAN Advanced Air Bag System (front seats)" (P.1-36) of this manual.

## High beam indicator light

This light comes on when the headlight high beam is on and goes out when the low beam is selected.

## SERVICE ENGINE SOON Malfunction Indicator Light (MIL)

If the malfunction indicator light comes on steady or blinks while the engine is running, it may indicate a potential emission control malfunction.

The malfunction indicator light may also come on steady if the fuel-filler cap is loose or missing, or if the vehicle runs out of fuel. Check to make sure the fuel-filler cap is installed and closed tightly, and that the vehicle has at least 3 US gallons (11.4 liters) of fuel in the fuel tank.

After a few driving trips, the SERVICE ENGINE SOON light should turn off if no other potential emission control system malfunction exists.

If this indicator light remains on for 20 seconds and then blinks for 10 seconds when the engine is not running, it indicates that the vehicle is not ready for an emission control system inspection/maintenance test. (See "Readiness for Inspection/Maintenance (I/M) test" (P.10-25).)

**Operation:**

The malfunction indicator light will come on in one of two ways:

- Malfunction indicator light on steady — An emission control system malfunction has been detected. Check the fuel-filler cap if the LOOSE FUEL CAP warning appears in the vehicle information display. If the fuel-filler cap is loose or missing, tighten or install the cap and continue to drive the vehicle. The SERVICE ENGINE SOON light should turn off after a few driving trips. If the SERVICE ENGINE SOON light does not turn off after a few driving trips, have the vehicle inspected. It is recommended you visit a NISSAN dealer for this service. You do not need to have your vehicle towed to the dealer.
- Malfunction indicator light blinking — An engine misfire has been detected which may damage the emission control system.

  To reduce or avoid emission control system damage:

  1) Do not drive at speeds above 45 MPH (72 km/h).
  2) Avoid hard acceleration or deceleration.
  3) Avoid steep uphill grades.
  4) If possible, reduce the amount of cargo being hauled or towed.

  The malfunction indicator light may stop blinking and remain on.

  Have the vehicle inspected. It is recommended you visit a NISSAN dealer for this service. You do not need to have your vehicle towed to the dealer.

**CAUTION**

**Continued vehicle operation without having the emission control system checked and repaired as necessary could lead to poor driveability, reduced fuel economy, and possible damage to the emission control system.**

## Rear fog light indicator light (if so equipped)

The rear fog light indicator light illuminates when the rear fog light is on. (See "Fog light switch" (P.2-38).)

## Security indicator light

The light blinks when the ignition switch is in the ACC, OFF or LOCK position. This function indicates the security system equipped on the vehicle is operational.

If the security system is malfunctioning, this light will remain on while the ignition switch is in the ON position. For additional information, see "Security systems" (P.2-29).

## Soft top indicator light (Roadster models)

This light illuminates when the soft top is being operated or it is stopped before reaching a full open/close state. When the top is fully opened or closed, the light will turn off.

The light blinks while the soft top is not fully opened or closed under the following conditions:

- When the vehicle is driven.
- When the shift lever is in the R (Reverse) position.

Be sure to fully open or close the soft top when driving the vehicle.

The soft top can be moved with the soft top operating switch only under all of the following conditions:

- When the vehicle is stopped.
- When the ignition switch is ON.
- When the trunk is closed.
- When the shift lever is in a position other than the R (Reverse) position.

**CAUTION**

**Operate the soft top with the engine running to prevent a discharged battery.**

When the soft top is operating, if any of the above conditions are discontinued or any of the following conditions are met, the top will stop operating.

- When the shift lever is in the R (Reverse) position.
- When the vehicle moves at a speed of 3 MPH (5 km/h) or more.
- When the battery voltage is extremely low.
- When the temperature of the soft top system becomes extremely high.

Release the operating switch, and push it again under the above conditions until the top is fully opened or closed. The soft top indicator light will turn off when the top operation is completely finished.

If the soft top indicator light illuminates with the ignition switch ON, it may indicate the electric soft top control unit is not functioning properly. Have your vehicle checked as soon as possible. It is recommended you visit a NISSAN dealer for this service.

For more details about the electric soft top operation, see "Soft top (Roadster models)" (P.3-23).

## S SynchroRev Match mode (S-MODE) indicator (if so equipped)

This indicator will illuminate when the SynchroRev Match mode (S-MODE) is activated. (See "SynchroRev Match mode (S-MODE) (if so equipped for Manual Transmission models)" (P.5-18).)

## N/I M Transmission position indicator (if so equipped)

When the ignition switch is pushed to the ON position, the indicator shows the transmission position.

**For AT models:**

In the manual shift mode, when the transmission does not shift to the selected gear due to the transmission protection mode, the AT position indicator light will blink and a buzzer will sound.

(See "Driving the vehicle" (P.5-12).)

## Turn signal/hazard indicator lights

The light flashes when the turn signal switch lever or hazard switch is turned on.

## OFF Vehicle Dynamic Control (VDC) off indicator light

When the ignition switch is in the ON position, the Vehicle Dynamic Control (VDC) off indicator light illuminates and then turns off.

The light comes on when the VDC off switch is pushed to OFF. This indicates that the VDC system and traction control system are not operating.

# AUDIBLE REMINDERS

## Key reminder chime

A chime will sound if the driver side door is opened while the ignition switch is pushed to the ACC position or pushed to the OFF or LOCK position with the Intelligent Key left in the Intelligent Key port. Make sure the ignition switch is pushed to the OFF position, and take the Intelligent Key with you when leaving the vehicle.

## Light reminder chime

A chime will sound when the driver side door is opened with the light switch in the or position and the ignition switch in the ACC, OFF or LOCK position.

Turn the light switch off when you leave the vehicle.

## Parking brake reminder chime

A chime will sound if the vehicle speed is above 4 MPH (7 km/h) with the parking brake applied. Stop the vehicle and release the parking brake.

## Brake pad wear warning

The disc brake pads have audible wear warnings. When a brake pad requires replacement, it will make a high pitched scraping sound when the vehicle is in motion. This scraping sound will first occur only when the brake pedal is depressed. After more wear of the brake pad the sound will always be heard even if the brake pedal is not depressed. Have the brakes checked as soon as possible if the warning sound is heard.

## VEHICLE INFORMATION DISPLAY

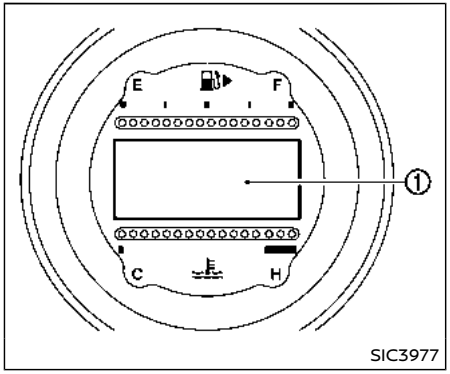


The vehicle information display ① displays the warnings and information.

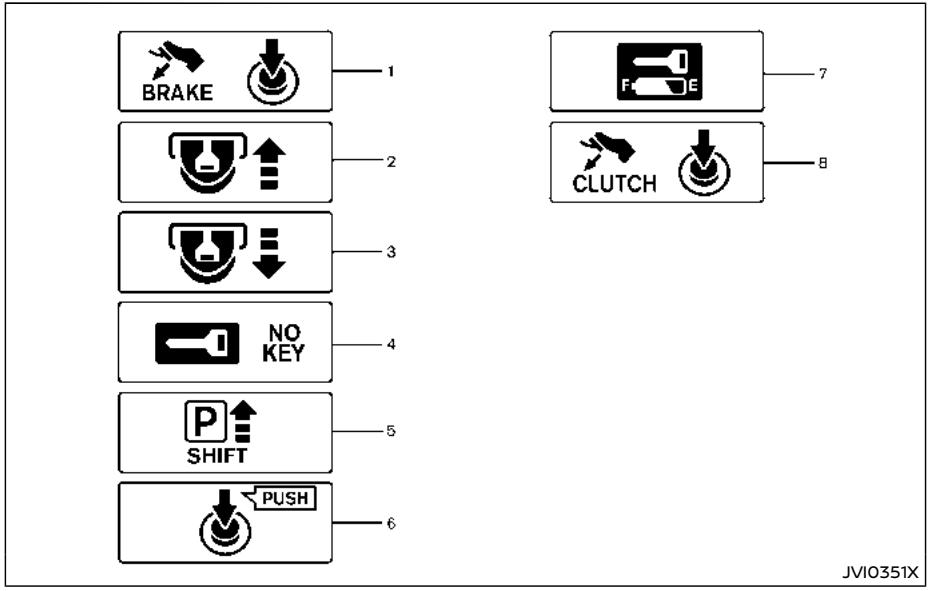


### OPERATIONAL INDICATORS

#### 1. Engine start operation indicator (Automatic transmission models)

This indicator appears when the shift lever is in the P (Park) position.

This indicator means that the engine will start by pushing the ignition switch with the brake pedal depressed.

#### 2. Key insertion indicator

This indicator appears when the key needs to be inserted into the key port. (For example, the Intelligent Key battery is discharged.)

If this indicator appears, insert the key into the key port in the correct direction. (See "Push-button ignition switch" (P.5-8).)

### 3. Intelligent Key removal indicator

This indicator appears when the driver's door is opened with the ignition switch in the OFF or LOCK position and the Intelligent Key placed in the key port. A key reminder chime also sounds.

If this indicator appears, remove the Intelligent Key from the key port and take it with you when leaving the vehicle.

### 4. NO KEY warning

This warning appears in either of the following conditions.

**No Intelligent Key inside the vehicle:**

The warning appears when the door is closed with the Intelligent Key left outside the vehicle and the ignition switch in the ACC or ON position. Make sure that the Intelligent Key is inside the vehicle.

**Unregistered Intelligent Key:**

The warning appears when the ignition switch is pushed from the LOCK position and the Intelligent Key cannot be recognized by the system. You cannot start the engine with an unregistered key. Use the registered Intelligent Key.

See "Intelligent Key system" (P.3-7) for more details.

### 5. SHIFT "P" warning (Automatic Transmission models)

This warning appears when the ignition switch is pushed to stop the engine with the shift lever in any position except the P (Park) position.

If this warning appears, move the shift lever to the P (Park) position or push the ignition switch to the ON position.

An inside warning chime will also sound. (See "Intelligent Key system" (P.3-7).)

### 6. "PUSH" warning (Automatic Transmission models)

This warning appears when the shift lever is moved to the P (Park) position with the ignition switch in the ACC position after the SHIFT "P" warning appears.

To push the ignition switch to the OFF position, perform the following procedure:

**SHIFT "P" warning** → (Move the shift lever to "P") → **PUSH warning** → (Push the ignition switch → ignition switch position is turned to ON) → **PUSH warning** → (Push the ignition switch → ignition switch position is turned to OFF)

### 7. Intelligent Key battery discharge indicator

This indicator appears when the Intelligent Key battery is running out of power.

If this indicator appears, replace the battery with a new one. (See "Intelligent Key battery replacement" (P.8-20).)

### 8. Engine start operation indicator (Manual Transmission models)

This indicator means that the engine will start by pushing the ignition switch with the clutch pedal depressed.

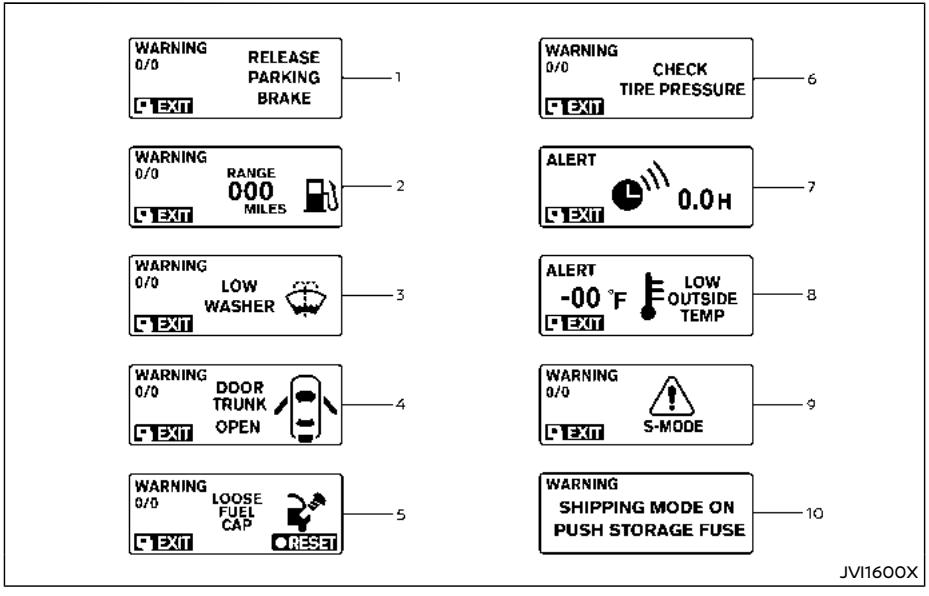


## WARNINGS AND ALERTS

### 1. Parking brake release warning

This warning appears when the vehicle speed is above 4 MPH (7 km/h) and the parking brake is applied.

### 2. Low fuel warning

This warning appears when the fuel level in the tank is getting low. Refuel as soon as it is convenient, preferably before the fuel gauge reaches the empty (E) position.

**There is a small reserve of fuel remaining in the tank when the fuel gauge reaches the empty (E) position.**

### 3. Low washer fluid warning

This warning appears when the washer tank fluid is at a low level. Add washer fluid as necessary. (See "Window washer fluid" (P.8-10).)

### 4. Door/rear hatch/trunk open warning (ignition switch is in the ON position)

This warning appears if any of the doors and/or the rear hatch/trunk are open or not closed securely. The vehicle icon indicates which door is open on the display.

### 5. Loose fuel cap warning

This warning appears when the fuel-filler cap is not tightened correctly after the vehicle has been refueled. (See "Fuel-filler cap" (P.3-36).)

### 6. Check tire pressure warning

This warning appears when the low tire pressure warning light in the meter illuminates and low tire pressure is detected. The warning appears each time the ignition switch is placed in the ON position as long as the low tire pressure warning light remains illuminated. If this warning appears, stop the vehicle and adjust the pressure to the recommended

COLD tire pressure shown on the recommended COLD tire pressure shown on the Tire and Loading Information label. (See "Tire Pressure Monitoring System (TPMS)" (P.5-3) and "Tire Pressure Monitoring System (TPMS)" (P.6-3).

### 7. "TIMER" indicator

This indicator appears when the set "TIMER" indicator activates. You can set the time for up to 6 hours. (See "Trip computer" (P.2-23).)

### 8. Low outside temperature warning

This warning appears if the outside temperature is below 37°F (3°C). The warning can be set not to be displayed. (See "Trip computer" (P.2-23).)

### 9. SynchroRev Match mode (S-MODE) warning

This warning appears if a system malfunction occurs. When the warning appears, the S-MODE function will not operate, but the manual transmission will operate normally and driving can be continued. Have the system checked. It is recommended you visit a NISSAN dealer for this service.

### 10. Extended storage fuse warning

This warning may appear if the extended storage fuse switch is not pushed in (switched on). When this warning appears, push in (switch on) the extended storage fuse switch to turn off the warning. For more information, see "Extended storage fuse switch" (P.8-19).

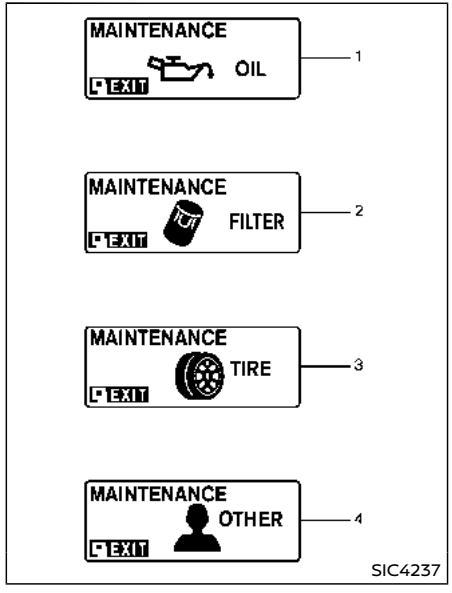

MAINTENANCE INDICATORS

1. Engine oil replacement indicator

This indicator appears when the set time comes for changing the engine oil. You can set or reset the distance for changing the engine oil. (See "Trip computer" (P.2-23).)

2. Oil filter replacement indicator

This indicator appears when the set time comes for replacing the oil filter. You can set or reset the distance for replacing the oil filter. (See "Trip computer" (P.2-23).)

3. Tire replacement indicator

This indicator appears when the set time comes for replacing tires. You can set or reset the distance for replacing tires. (See "Trip computer" (P.2-23).)

**WARNING**

**The tire replacement indicator is not a substitute for regular tire checks, including tire pressure checks. See "Changing wheels and tires" (P.8-33). Many factors including tire inflation, alignment, driving habits and road conditions affect tire wear and when tires should be replaced. Setting the tire replacement indicator for a certain driving distance does not mean your tires will last that long. Use the tire replacement indicator as a guide only and always perform regular tire checks. Failure to perform regular tire checks, including tire pressure checks could result in tire failure. Serious vehicle damage could occur and may lead to a collision, which could result in serious personal injury or death.**

4. "OTHER" indicator

This indicator appears when the set time comes for replacing items other than the engine oil, oil filter and tires. You can set or reset the distance for replacing the items. (See "Trip computer" (P.2-23).)

Models with navigation system:

More maintenance reminders are also available on the center display. (See "How to use INFO button" (P.4-8).)

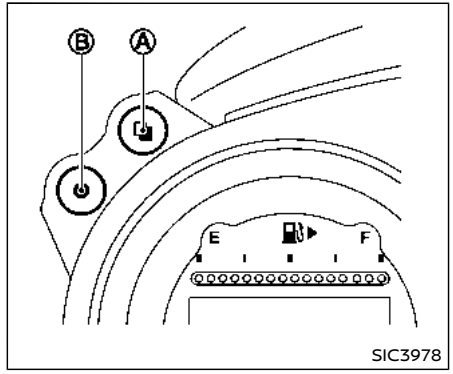


TRIP COMPUTER

Switches for the trip computer are located on the left side of the combination meter panel. To operate the trip computer, push the switches as shown above.

Ⓐ ❑ ENTER switch
Ⓑ ● NEXT switch

When the ignition switch is pushed to the ON position, modes of the trip computer can be selected by pushing the ❑ switch Ⓐ.

Each time the ❑ switch Ⓐ is pushed, the display will change as follows:

Current fuel consumption → Average fuel consumption and speed → Elapsed time

and trip odometer → Distance to empty → Outside air temperature → Clock → Setting → Warning check → Current fuel consumption

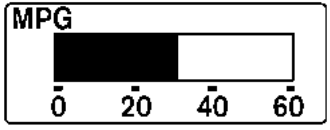


SIC3673

## Current fuel consumption (MPG or l (liter)/100 km)

The current fuel consumption mode shows the current fuel consumption.

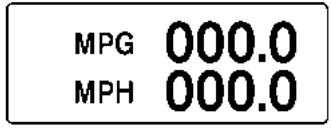


SIC3674

## Average fuel consumption (MPG or l (liter)/100 km) and speed (MPH or km/h)

**Fuel consumption:**

The average fuel consumption mode shows the average fuel consumption since the last reset. Resetting is done by pushing the ● switch Ⓑ for longer than 1 second. (The average speed is also reset at the same time.)

The display is updated every 30 seconds. At about the first 1/3 mile (500 m) after a reset, the display shows "——".

**Speed:**

The average speed mode shows the average vehicle speed since the last reset. Resetting is done by pushing the ● switch Ⓑ for longer than 1 second. (The average fuel consumption is also reset at the same time.)

The display is updated every 30 seconds. The first 30 seconds after a reset, the display shows "——".

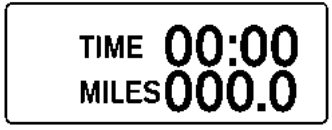


SIC4226

## Elapsed time and trip odometer (MILES or km)

**Elapsed time:**

The elapsed time mode shows the time since the last reset. The displayed time can be reset by pushing the ● switch Ⓑ for longer than 1 second. (The trip odometer is also reset at the same time.)

**Trip odometer:**

The trip odometer mode shows the total distance the vehicle has been driven since the last reset. Resetting is done by pushing the ● switch Ⓑ for longer than 1 second. (The elapsed time is also reset at the same time.)

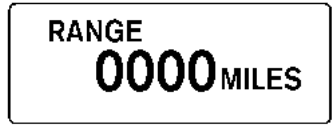


SIC3676

## Distance to empty (MILES or km)

The distance to empty (dte) mode provides you with an estimation of the distance that can be driven before refueling. The dte is constantly being calculated, based on the amount of fuel in the fuel tank and the actual fuel consumption.

The display is updated every 30 seconds.

The dte mode includes a low range warning feature. If the fuel level is low, the warning is displayed on the screen.

When the fuel level drops even lower, the dte display will change to "——".

- If the amount of fuel added is small, the display just before the ignition switch is pushed to the OFF position may continue to be displayed.
- When driving uphill or rounding curves, the fuel in the tank shifts, which may momentarily change the display.

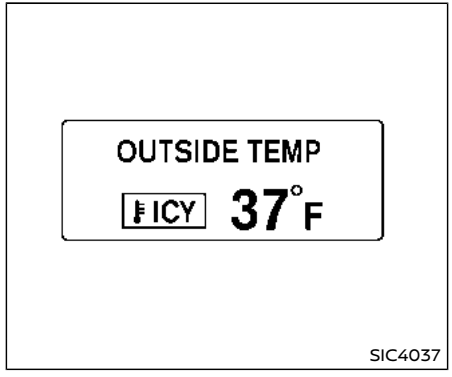

SIC4037

## Outside air temperature (°F or °C)

The outside air temperature is displayed in °F or °C in the range of −22 to 131°F (−30 to 55°C).

The outside air temperature mode includes a low temperature warning feature. If the outside air temperature is below 37°F (3°C), the warning "ICY" is displayed on the screen.

The outside temperature sensor is located in front of the radiator. The sensor may be affected by road or engine heat, wind directions and other driving conditions. The display may differ from the actual outside temperature or the temperature displayed on various signs or billboards.

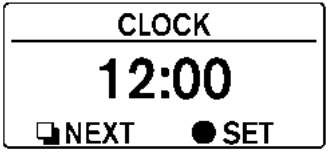


JVI1447X

## Clock

Clock can be adjusted in this mode.

**Adjusting the time:**

To adjust the time, perform the following procedure.

1. Push the ● switch Ⓑ for a short time.

   The hours display will start to flash.

   Keep pushing the ● switch Ⓑ to adjust the hours.
2. Push the ❑ switch Ⓐ for a short time.

   The minutes display will start to flash.

   Keep pushing the ● switch Ⓑ to adjust the minutes.
3. Push the ❑ switch Ⓐ for a short time to complete the clock adjustment.

**Resetting the time:**

Push the ● switch Ⓑ for more than 1 second to reset the time.

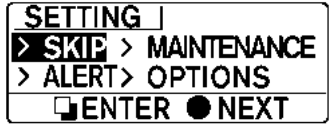


JVI1452X

## Setting

**Setting cannot be made while driving. A message "Setting can only be operated when stopped" is also displayed on the vehicle information display.**

The ❑ switch Ⓐ and ● switch Ⓑ are used in the setting mode to select and decide a menu.

**SKIP:**

Push the ❑ switch Ⓐ to move to the warning check mode.

Push the ● switch Ⓑ to select other menus.

**ALERT:**

Alert menu can be set to notify the following items.

- UPSHIFT
  Select this submenu to set the engine speed (RPM) of the upshift indicator. See "Upshift indicator" (P.5-20) (MT models) or "Manual shift mode" (P.5-14) (AT models).
- TIMER
  Select this submenu to specify when the "TIMER" indicator activates.
- ICY
  Select this submenu to display the low outside temperature warning.

To return to the top page of the setting mode, select "BACK".

**MAINTENANCE:**

The maintenance intervals of the following items can be set or reset for the reminders.

- OIL
  Select this submenu to set or reset the distance for changing the engine oil.
- FILTER
  Select this submenu to set or reset the distance for replacing the oil filter.
- TIRE
  Select this submenu to set or reset the distance for replacing tires.
- OTHER
  Select this submenu and set or reset the distance for replacing items other than the engine oil, oil filter and tires.

To return to the top page of the setting mode, select "BACK".

**OPTIONS:**

The 3 option menus can be set to your preference.

- LANGUAGE
  Select this submenu to choose English or French for display.
- UNIT
  Select this submenu to choose the unit from US or METRIC.
- EFFECTS
  Select this menu to set the dial effects described below to on or off.
  — The indicator needles sweep in the meters when the engine is started.

To return to the top page of the setting mode, select "BACK".

## Warning check

To see if there are any of the following warnings and corresponding details, select this menu.

- No key warning
- Low fuel warning
- Low washer fluid warning
- Parking brake release warning
- Door/rear hatch/trunk open warning
- Loose fuel cap warning
- Check tire pressure warning

**SKIP:**

Push the switch Ⓐ to move to the warning check mode.

Push the ● switch Ⓑ to select other menus.

**DETAIL:**

This item is available only when a warning is displayed.

Select this menu to see the details of warnings.

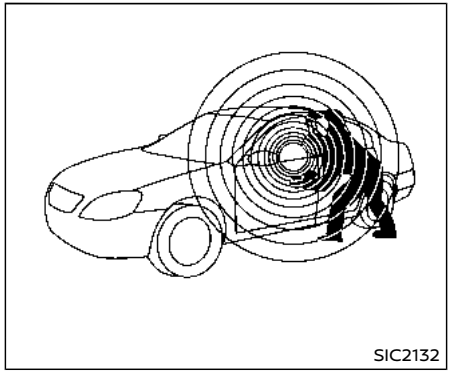


Your vehicle has two types of security systems, as follows:

- Vehicle security system
- NISSAN Vehicle Immobilizer System

The security condition will be shown by the security indicator light.

## VEHICLE SECURITY SYSTEM

The vehicle security system provides visual and audio alarm signals if someone opens the doors, hood or rear hatch/ trunk when the system is armed. It is not, however, a motion detection type system that activates when a vehicle is moved or when a vibration occurs.

The system helps deter vehicle theft but cannot prevent it, nor can it prevent the theft of interior or exterior vehicle components in all situations. Always secure your vehicle even if parking for a brief period. Never leave your Intelligent Key(s) in the vehicle, and always lock it when unattended. Be aware of your surroundings, and park in secure, well-lit areas whenever possible.

Many devices offering additional protection, such as component locks, identification markers, and tracking systems, are available at auto supply stores and specialty shops. Your NISSAN dealer may also offer such equipment. Check with your insurance company to see if you may be eligible for discounts for various theft protection features.

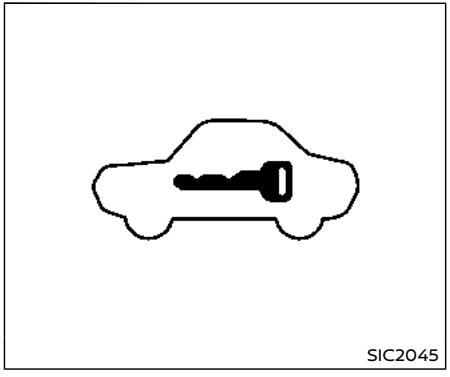


## How to arm the vehicle security system

1. Close all windows.

   **The system can be armed even if the windows are open.**
2. Push the ignition switch to the OFF position.
3. Remove the Intelligent Key from the vehicle.
4. Close all doors, hood and rear hatch/trunk. Lock all doors and trunk (Roadster models). The doors can be locked with the Intelligent Key, door handle request switch, power door lock switch or mechanical key.
5. Confirm that the security indicator light comes on. The security indicator light stays on for about 30 seconds. The vehicle security system is now pre-armed. After about 30 seconds the vehicle security system automatically shifts into the armed phase. The security light begins to flash once every approximately 3 seconds. If, during this 30-second pre-arm time period, the door is unlocked, or the ignition switch is pushed to ACC or ON, the system will not arm.

**Even when the driver and/or passengers are in the vehicle, the system will activate with all doors, hood and rear hatch locked with the ignition switch in the LOCK position. When pushing the ignition switch to the ACC or ON position, the system will be released.**

## Vehicle security system activation

The vehicle security system will give the following alarm:

- The headlights blink and the horn sounds intermittently.
- The alarm automatically turns off after approximately 1 minute. However, the alarm reactivates if the vehicle is tampered with again.

The alarm is activated by:

- Unlocking the door or opening the rear hatch without using the button on the Intelligent Key, the door handle request switch or the mechanical key. (Even if the door is opened by releasing the door inside lock knob, the alarm will activate.)
- Opening the hood.

## How to stop an activated alarm

The alarm will stop by unlocking a door by pushing the unlock button on the Intelligent Key, the door handle request switch or using the mechanical key. The alarm will not stop if the ignition switch is pushed to the ACC or ON position.

**If the system does not operate as described above, it is recommended you have it checked by a NISSAN dealer.**

## NISSAN VEHICLE IMMOBILIZER SYSTEM

The NISSAN Vehicle Immobilizer System will not allow the engine to start without the use of the registered Intelligent Key. **Never leave these keys in the vehicle.**

**For USA:**

**This device complies with Part 15 of the FCC Rules. Operation is subject to the following two conditions:**

**(1) This device may not cause harmful interference, and (2) this device must**

**accept any interference received, including interference that may cause undesired operation.**

**Note: Changes or modifications not expressly approved by the party responsible for compliance could void the user's authority to operate the equipment.**

**For Canada:**

**This device complies with Industry Canada licence-exempt RSS standard(s). Operation is subject to the following two conditions:**

**(1) this device may not cause interference, and (2) this device must accept any interference, including interference that may cause undesired operation of the device.**

SIC2045

## Security indicator light

The security indicator light is located on the meter panel. It indicates the status of the NISSAN Vehicle Immobilizer System.

The light blinks after the ignition switch is in the LOCK, ACC or OFF position. This function indicates the security systems equipped on the vehicle are operational.

If the NISSAN Vehicle Immobilizer System is malfunctioning, this light will remain on while the ignition switch is in the ON position.

**If the light still remains on and/or the engine will not start, seek service for NISSAN Vehicle Immobilizer System as soon as possible. Please bring all Intelligent Keys that you have. It is recommended you visit a NISSAN dealer for this service.**

**WARNING**

**In freezing temperatures the washer solution may freeze on the windshield and obscure your vision which may lead to an accident. Warm windshield with the defroster before you wash the windshield.**

**CAUTION**

- **Do not operate the washer continuously for more than 30 seconds.**
- **Do not operate the washer if the reservoir tank is empty.**
- **Do not fill the window washer reservoir tank with washer fluid concentrates at full strength. Some methyl alcohol based washer fluid concentrates may permanently stain the grille if spilled while filling the window washer reservoir tank.**
- **Pre-mix washer fluid concentrates with water to the manufacturer's recommended levels before pouring the fluid into the window washer reservoir tank. Do not use the window washer reservoir tank to mix the washer fluid concentrate and water.**

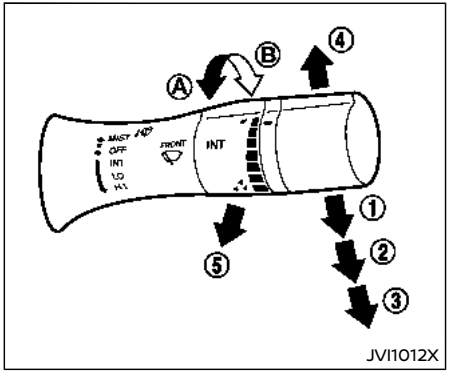


The windshield wiper and washer operates when the ignition switch is in the ON position.

Push the lever down to operate the wiper at the following speed:

① Intermittent — intermittent operation can be adjusted by turning the knob toward Ⓐ (Slower) or Ⓑ (Faster).

When the speed sensing wiper interval function (for models with navigation system) is turned on, the intermittent operation speed varies in accordance with the vehicle speed. (For example, when the vehicle speed is high, the intermittent operation speed will be faster.)

Models with navigation system:

Note that the function is set to disabled

as the factory default setting. To turn this function on and off, see "How to use SETTING button" (P.4-11).

② Low — continuous low speed operation

③ High — continuous high speed operation

Push the lever up ④ to have one sweep operation of the wiper.

Pull the lever toward you ⑤ to operate the washer. Then the wiper will also operate several times.

**Wiper drip wipe system:**

The wiper will also operate once about 3 seconds after the washer and wiper are operated. This operation is to wipe washer fluid that has dripped on the windshield.

## REAR WINDOW DEFROSTER SWITCH

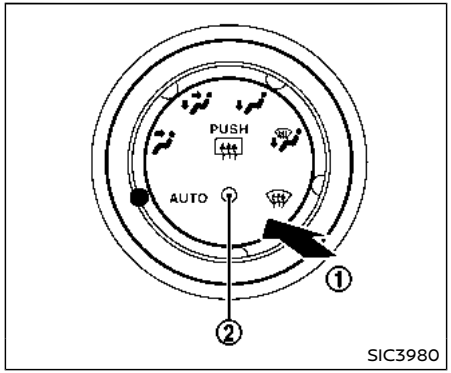


**Type A (if so equipped)**

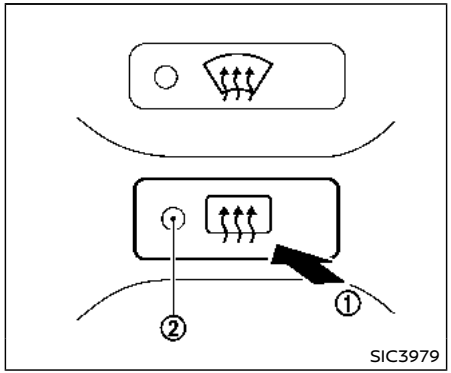


**Type B (if so equipped)**

To defog/defrost the rear window glass and outside mirrors, start the engine and push the switch ① on. The indicator light ② will come on. Push the switch again to turn the defroster off.

It will automatically turn off in approximately 15 minutes.

### CAUTION

- **When cleaning the inner side of the rear window, be careful not to scratch or damage the rear window defroster.**
- **Do not use the rear window defroster switch while the soft top is being operated or fully opened. The heat may damage the top material and/or components (for Roadster models).**

## XENON HEADLIGHTS

**WARNING**

**HIGH VOLTAGE**

- **When xenon headlights are on, they produce a high voltage. To prevent an electric shock, never attempt to modify or disassemble. Always have your xenon headlights replaced by a certified service technician.**
- **Xenon headlights provide considerably more light than conventional headlights. If they are not correctly aimed, they might temporarily blind an oncoming driver or the driver ahead of you and cause a serious accident. If headlights are not aimed correctly, it is recommended you immediately take your vehicle to a NISSAN dealer and have the headlights adjusted correctly.**

When the xenon headlight is initially turned on, its brightness or color varies slightly. However, the color and brightness will soon stabilize.

- **The life of xenon headlights will be shortened by frequent on-off operation. It is generally desirable not to turn off the headlights for short intervals (for example, when the vehicle stops at a traffic signal).**
- **If the xenon headlight bulb is close to burning out, the brightness will drastically decrease, the light will start blinking, or the color of the light will become reddish. If one or more of the above signs appear, it is recommended you visit a NISSAN dealer.**

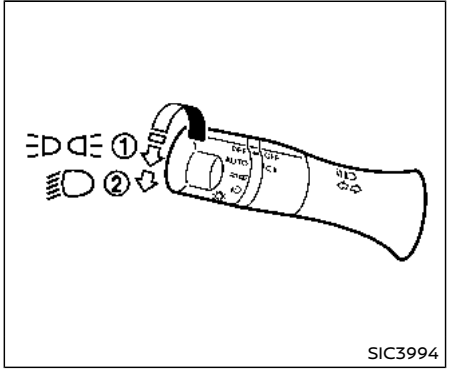

SIC3994

## HEADLIGHT SWITCH

### Lighting

① Turn the switch to the position:
The front parking, side marker, tail, license plate, instrument lights and daytime running lights will come on.

② Turn the switch to the position:
Headlights will come on and all the other lights remain on. However, the daytime running lights will turn off.

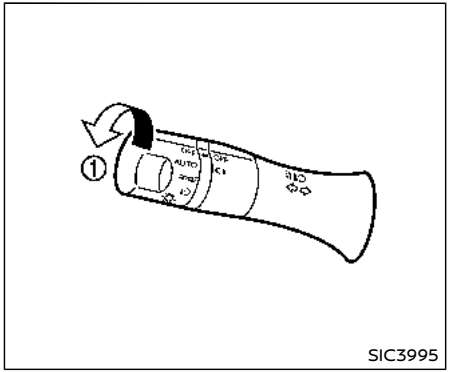

SIC3995

## Autolight system

The autolight system allows the headlights to be set so they turn on and off automatically.

To set the autolight system:

1. Make sure the headlight switch is in the AUTO position ①.
2. Push the ignition switch to the ON position.
3. The autolight system automatically turns the headlights on and off.

To turn the autolight system off, turn the switch to the OFF, or position.

The autolight system can turn on the headlights automatically when it is dark and turn off the headlights when it is light.

If the ignition switch is pushed to the OFF position and one of the doors is opened and this condition is continued, the headlights remain on for 5 minutes.

**Automatic headlights off delay:**

You can keep the headlights on for 45 seconds after you push the ignition switch to OFF and open any door then close all the doors.

Models with navigation system:

You can adjust the period of the automatic headlights off delay from 0 seconds (OFF) to 180 seconds. The factory default setting is 45 seconds.

For automatic headlights off delay setting, see "Light Off Delay" (P.4-15).

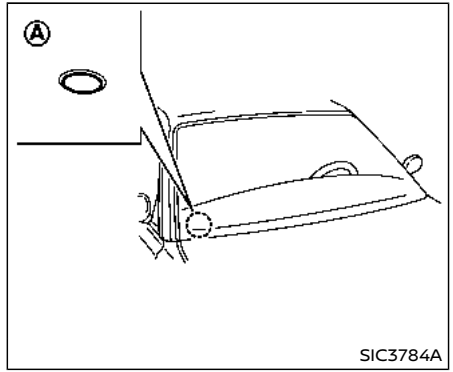

SIC3784A

**Be sure not to put anything on top of the photo sensor Ⓐ located on the top of the instrument panel. The photo sensor controls the autolight; if it is covered, the photo sensor reacts as if it is dark and the headlights will illuminate.**

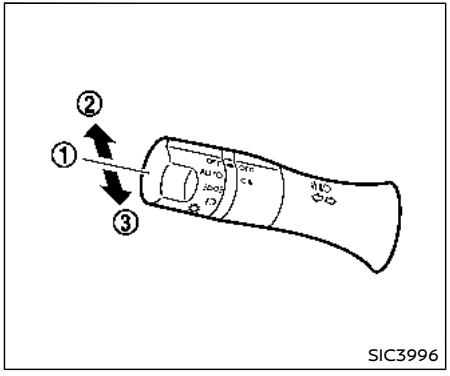


## Headlight beam select

① To select the low beam, put the lever in the neutral position as shown.

② To select the high beam, push the lever forward while the switch is in the position. Pull it back to select the low beam.

③ Pulling the lever toward you will flash the headlight high beam even when the headlight switch is in the OFF position.

## Battery saver system

A chime will sound when the driver side door is opened with the light switch in the or position and the ignition switch in the ACC, OFF or LOCK position.

When the headlight switch is in the or position while the ignition switch is in the ON position, the lights will automatically turn off after a period of time when the ignition switch has been pushed to the OFF position.

When the headlight switch remains in the or position after the lights automatically turn off, the lights will turn on when the ignition switch is pushed to the ON position.

**CAUTION**

- **When you turn on the headlight switch again after the lights automatically turn off, the lights will not turn off automatically. Be sure to turn the light switch to the OFF position when you leave the vehicle for extended periods of time, otherwise the battery will be discharged.**
- **Never leave the light switch on when the engine is not running for extended periods of time even if the headlights turn off automatically.**

## Daytime running light system

The daytime running lights automatically illuminate when the engine is started with the parking brake released. The daytime running lights operate with the headlight switch in the OFF position or in the position. Turn the headlight switch to the position for full illumination when driving at night. However, the daytime running lights will turn off.

If the parking brake is applied before the engine is started, the daytime running lights do not illuminate. The daytime running lights illuminate once the parking brake is released. The daytime running lights will remain on until the ignition switch is pushed to the OFF position.

**WARNING**

**When the daytime running light system is active, tail lights on your vehicle are not on. It is necessary at dusk to turn on your headlights. Failure to do so could cause an accident injuring yourself and others.**

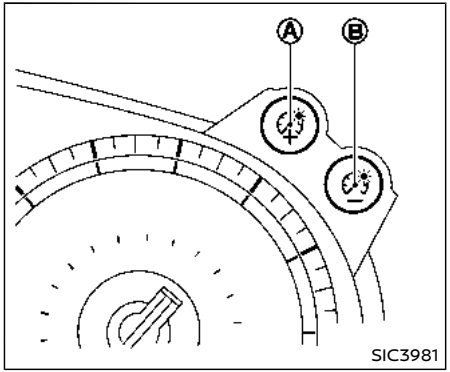


## Instrument brightness control

The instrument brightness control operates when the headlight control switch is in the , or AUTO position (with the autolights activated).

Push the upper Ⓐ or lower Ⓑ switch to brighten or dim the instrument panel lights when driving at night.

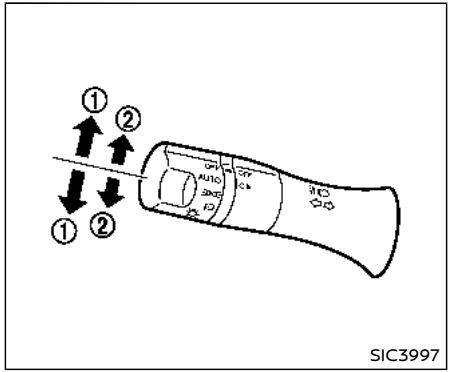


## TURN SIGNAL SWITCH

### ① Turn signal

Move the lever up or down to signal the turning direction. When the turn is completed, the turn signals cancel automatically.

### ② Lane change signal

Move the lever up or down until the turn signal begins to flash, but the lever does not latch, to signal a lane change. Hold the lever until the lane change is completed.

Move the lever up or down until the turn signal begins to flash, but the lever does not latch, and release the lever. The turn signal will automatically flash three times.

Choose the appropriate method to signal a lane change based on road and traffic conditions.

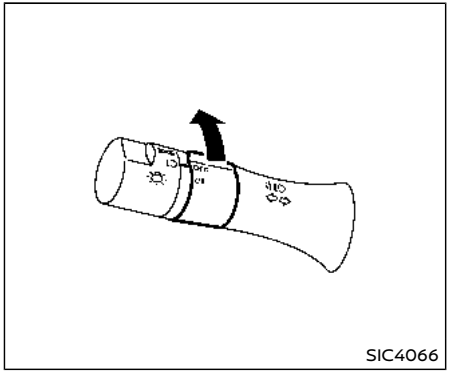


## FOG LIGHT SWITCH (if so equipped)

To turn on the rear fog light, turn the headlight switch to the position, then turn the fog light switch to the position.

The switch returns to the OFF position automatically, and the rear fog light will illuminate.

Make sure the indicator light on the instrument panel illuminates.

To turn off the rear fog light, turn the fog light switch to the position again.

Make sure the indicator light on the instrument panel turns off.

## HORN

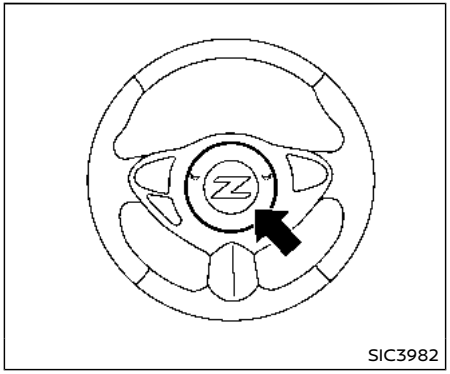


To sound the horn, push the center pad area of the steering wheel.

**WARNING**

**Do not disassemble the horn. Doing so could affect proper operation of the supplemental front air bag system. Tampering with the supplemental front air bag system may result in serious personal injury.**

## HEATED SEATS (if so equipped)

**WARNING**

**Do not use or allow occupants to use the seat heater if you or the occupants cannot monitor elevated seat temperatures or have an inability to feel pain in those body parts in contact with the seat. Use of the seat heater by such people could result in serious injury.**

**CAUTION**

- **The battery could run down if the seat heater is operated while the engine is not running.**
- **Do not use the seat heater for extended periods or when no one is using the seat.**
- **Do not put anything on the seat which insulates heat, such as a blanket, cushion, seat cover, etc. Otherwise, the seat may become overheated.**
- **Do not place anything hard or heavy on the seat or pierce it with a pin or similar object. This may result in damage to the heater.**

- **Any liquid spilled on the heated seat should be removed immediately with a dry cloth.**
- **When cleaning the seat, never use gasoline, thinner, or any similar materials.**
- **If any malfunctions are found or the heated seat does not operate, turn the switch off and have the system checked. It is recommended you visit a NISSAN dealer for this service.**

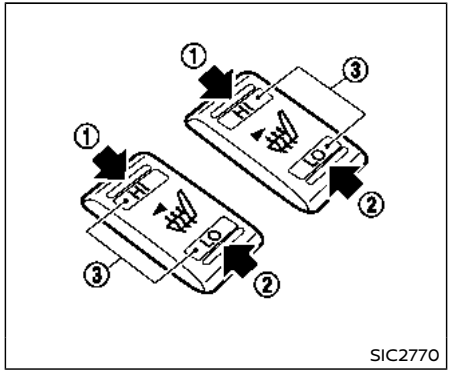

SIC2770

The front seats are warmed by built-in heaters. The switches located on the center console can be operated independently of each other.

1. Start the engine.
2. Select the desired heat range.
   - For high heat, push the HI side of the switch ①.
   - For low heat, push the LO side of the switch ②.
   - The indicator light ③ will illuminate when the heater is on.
3. To turn off the heater, return the switch to the level position. Make sure that the indicator light turns off.

The heater is controlled by a thermostat, automatically turning the heater on and off. The indicator light will remain on as long as the switch is on.

When the vehicle's interior is warmed, or before you leave the vehicle, be sure to turn off the switch.

## CLIMATE CONTROLLED SEATS (if so equipped)

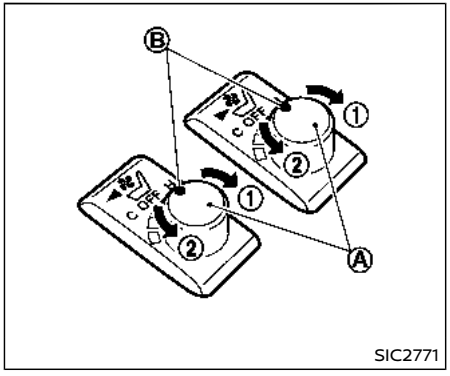


The climate controlled seat warms up or cools down the front seats by blowing warm or cool air from the surface of the seat. The switches located on the center console can be operated independently of each other.

The surface temperature of the climate controlled seats is automatically controlled at an optimum temperature. However, adjust the temperature using the control knob if the seats are too hot or cold.

1. Start the engine.
2. Turn the control knob Ⓐ to the heat side ① or to the cool side ②. The indicator light Ⓑ on the control knob will illuminate.
3. Adjust the desired amount of the air using the control knob Ⓐ.
4. When the vehicle's interior is warmed or cooled, and/or before you leave the vehicle, be sure to turn the control knob to the OFF position (center). The indicator light Ⓑ on the control knob goes off at the OFF position.

   The climate controlled seat has air filters. If the climate controlled seat is not functioning properly, it may indicate the air filters may be clogged. To check the air filters for the climate controlled seat, it is recommended you visit a NISSAN dealer.

### WARNING

**Do not use or allow occupants to use the climate controlled seat if you or the occupants cannot monitor seat temperatures or have an inability to feel pain in those body parts in contact with the seat. Use of the climate controlled seats by such people could result in serious injury.**

### CAUTION

- **Do not place objects in front of the intake inlets located behind and under the front seat. Doing so could cause improper operation or interruption of the operation.**
- **The battery could run down if the climate controlled seat is operated while the engine is not running.**
- **Do not use the climate controlled seat for extended periods or when no one is using the seat.**
- **Do not put anything on the seat which insulates heat, such as a blanket, cushion, seat cover, etc. Otherwise, the seat may become overheated.**
- **Do not place anything hard or heavy on the seat or pierce it with a pin or similar object. This may result in damage to the climate controlled seat.**
- **Any liquid spilled on the seat should be removed immediately with a dry cloth.**

- **The climate controlled seat has air filters. Do not operate the climate controlled seat without the air filters. This may result in damage to the system.**
- **When cleaning the seat, never use gasoline, thinner, or any similar materials.**
- **If any malfunctions are found or the climate controlled seat does not operate, turn the switch off and have the system checked. It is recommended you visit a NISSAN dealer for this service.**

## VEHICLE DYNAMIC CONTROL (VDC) OFF SWITCH

SSD1161

The vehicle should be driven with the Vehicle Dynamic Control (VDC) system on for most driving conditions.

If the vehicle is stuck in mud or snow, the VDC system reduces the engine output to reduce wheel spin. The engine speed will be reduced even if the accelerator is depressed to the floor. If maximum engine power is needed to free a stuck vehicle, turn the VDC system off.

To turn off the VDC system, push the VDC OFF switch. The indicator light will illuminate.

Push the VDC OFF switch again or restart the engine to turn on the system. (See "Vehicle Dynamic Control (VDC) system" (P.5-30).)

## POWER OUTLET

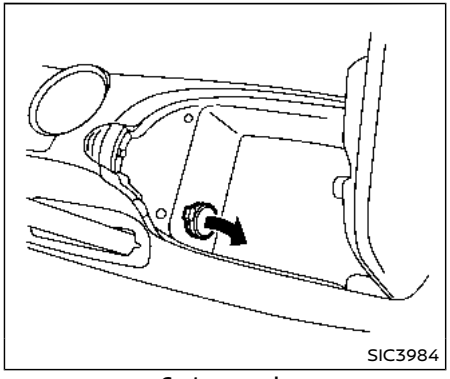


Center console

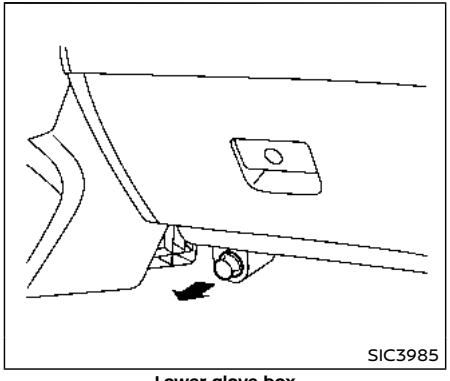


Lower glove box

The power outlet is located in the center console and on the lower glove box.

**CAUTION**

- **The outlet and plug may be hot during or immediately after use.**
- **Do not use with accessories that exceed a 12 volt, 120W (10A) power draw. Do not use double adapters or more than one electrical accessory.**
- **Use power outlet with the engine running to avoid discharging the vehicle battery.**
- **Avoid using power outlet when the air conditioner, headlights or rear window defroster is on.**
- **This power outlet is not designed for use with a cigarette lighter unit.**
- **Push the plug in as far as it will go. If good contact is not made, the plug may overheat or the internal temperature fuse may blow.**
- **Before inserting or disconnecting a plug, be sure the electrical accessory being used is turned OFF.**
- **When not in use, be sure to close the cap. Do not allow water or any liquid to contact the outlet.**

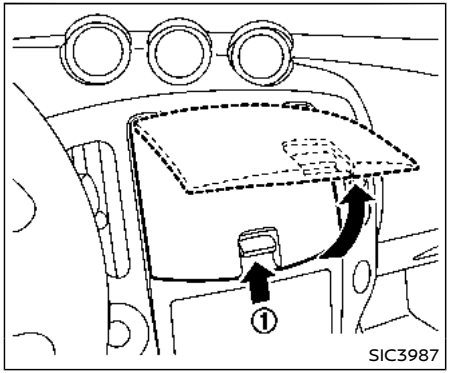


INSTRUMENT POCKET (except for navigation system equipped models)

To open the lid, push the knob up ①.

To close, push the lid down.

**WARNING**

**Keep the pocket lid closed while driving to help prevent injury in an accident or a sudden stop.**

CUP HOLDERS

**CAUTION**

- **Avoid abrupt starting and braking when the cup holder is being used to prevent spilling the drink. If the liquid is hot, it can scald you or your passenger.**
- **Use only soft cups in the cup holder. Hard objects can injure you in an accident.**

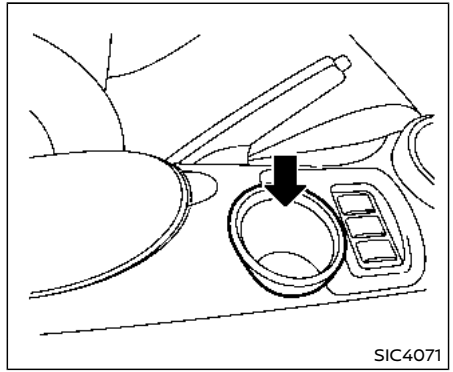


A cup holder is located on the center console.

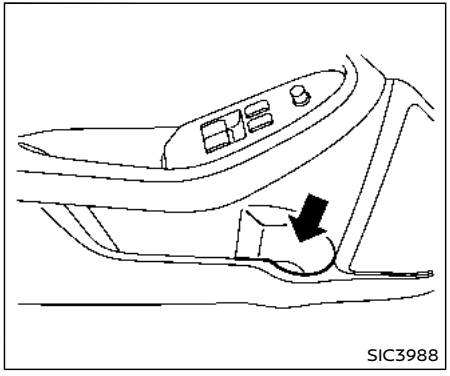


## Soft bottle holder

**CAUTION**

- **Do not use bottle holder for any other objects that could be thrown about in the vehicle and possibly injure people during sudden braking or an accident.**
- **Do not use bottle holder for open liquid containers.**

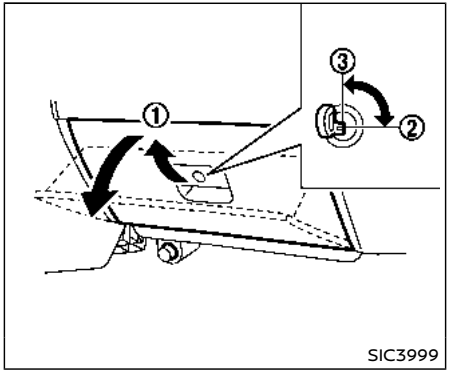


## GLOVE BOX

**WARNING**

**Keep glove box lid closed while driving to help prevent injury in an accident or a sudden stop.**

To open the glove box, pull the handle ①.

To close, push the lid in until the lock latches.

To lock ②/unlock ③ the glove box, use the mechanical key. For the mechanical key usage, see “Keys” (P.3-3).

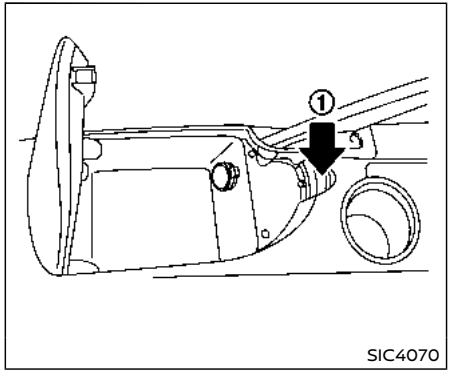


## CONSOLE BOX

To open the console box, push the button ① and pull up the lid.

To close, push the lid down until latched.

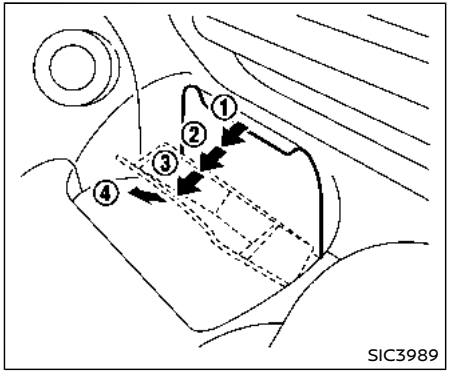


## REAR PARCEL BOX

The rear parcel box is located behind the right-side seat.

To open the rear parcel box, pull the upper part of the lid to position ① or ②.

To remove the rear parcel box, pull the lid to position ③ with a greater force until it unlatches. And then, pull the rear parcel box to direction ④.

To install, make sure the two hinges of the rear parcel box engaged with the holders, then perform the steps above in the reverse order.

**WARNING**

**Keep the rear parcel box lid closed while driving to help prevent injury in an accident or a sudden stop.**

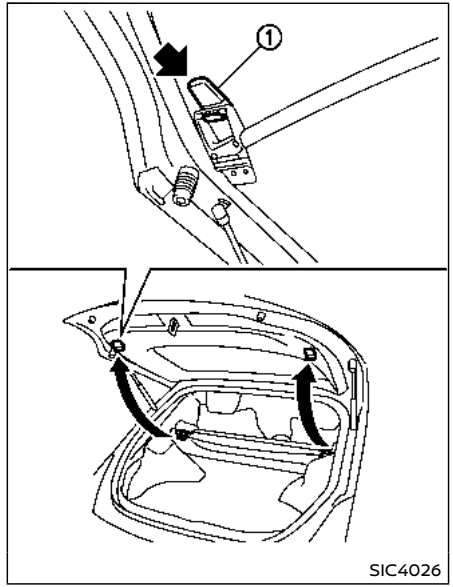


## CARGO COVER (if so equipped)

The cargo cover keeps the contents in the cargo area hidden from the outside.

To use the cargo cover, pull it out and hang both sides on the hooks ① located on the inside of the rear hatch.

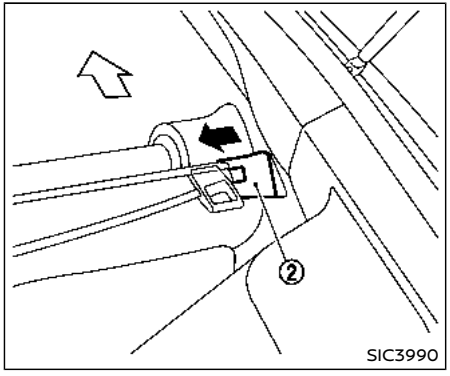


To remove the cargo cover unit, stow the cover and pull the holder ② to the opposite side.

**WARNING**

- **Never put anything on the cargo cover, no matter how small. Any object on it could cause an injury in an accident or sudden stop.**
- **Do not leave the cargo cover in the vehicle with it disengaged from the holder.**
- **Properly secure all cargo with ropes or straps to help prevent it from sliding or shifting. Do not place cargo higher than the seatbacks. In a sudden stop or collision, unsecured cargo could cause personal injury.**
- **Properly secure cargo and do not allow it to contact the top tether strap when it is attached to the top tether anchor. Cargo that is not properly secured or cargo that contacts the top tether strap may damage the top tether strap during a collision. If the cargo cover contacts the top tether strap when it is attached to the top tether anchor, remove the cargo cover from the vehicle or secure it on the cargo floor below its attachment location. If the cargo cover is not removed, it may damage the top tether strap during a collision. Your child could be seriously injured or killed in a collision if the child restraint top tether strap is damaged.**

## WINDOWS

### POWER WINDOWS

**WARNING**

- **Make sure that all passengers have their hands, etc. inside the vehicle while it is in motion and before closing the windows. Use the window lock switch to prevent unexpected use of the power windows.**
- **To help avoid risk of injury or death through unintended operation of the vehicle and or its systems, including entrapment in windows or inadvertent door lock activation, do not leave children, people who require the assistance of others or pets unattended in your vehicle. Additionally, the temperature inside a closed vehicle on a warm day can quickly become high enough to cause a significant risk of injury or death to people and pets.**

The power windows operate when the ignition switch is in the ON position or for about 45 seconds after the ignition switch is pushed to the OFF position. If the driver's or front passenger's door is

opened during this period of about 45 seconds, power to the windows is canceled.

The power window switches will be deactivated during soft top operation (Roadster models).

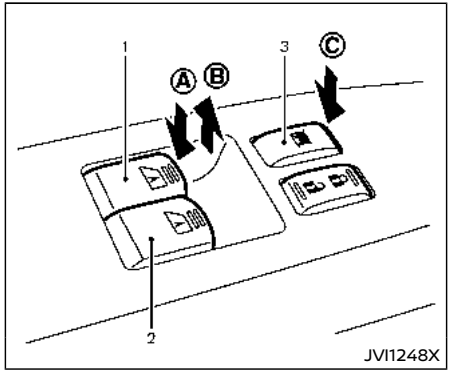


1. Driver side window
2. Front passenger side window
3. Window lock button

## Main power window switch (driver's side)

To open or close the window, push down Ⓐ or pull up Ⓑ the switch and hold it. The main switch (driver side switches) will open or close all the windows.

## Locking passengers' window

When the lock button Ⓒ is pushed in, only the driver side window can be opened or closed. Push it in again to cancel.

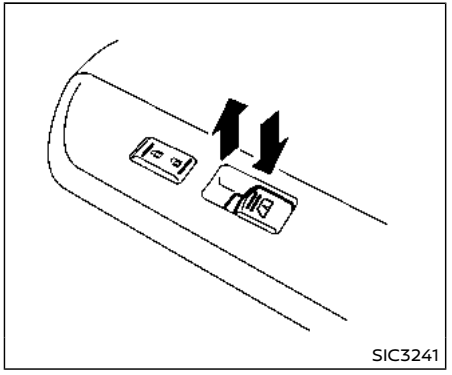


## Passenger side power window switch

The passenger side switch will open or close only the corresponding window. To open or close the window, push down or pull up the switch and hold it.

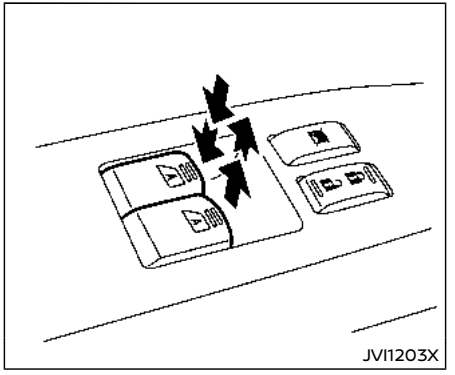


## Automatic operation

To fully open or close the window, completely push down or pull up the switch and release it; it need not be held. The window will automatically open or close all the way. To stop the window, just push or lift the switch in the opposite direction.

A light push or pull on the switch will cause the window to open or close until the switch is released.

## Auto reverse function

**WARNING**

**There are some small distances immediately before the closed position which cannot be detected. Make sure that all passengers have their hands, etc., inside the vehicle before closing the window.**

If the control unit detects something caught in the window as it is closing, the window will be immediately lowered.

The auto reverse function can be activated when the window is closed by automatic operation when the ignition switch is in the ON position or for 45 seconds after the ignition switch is pushed to the OFF position.

**Depending on the environment or driving conditions, the auto reverse function may be activated if an impact or load similar to something being caught in the window occurs.**

## Automatic window lowering (Roadster models)

When the soft top operating switch is pressed, the power windows will automatically be lowered completely. The windows do not rise automatically after the soft top open/close operation is completed. Use the power window switches to raise them.

## Automatic adjusting function

**CAUTION**

**When the battery cable is removed from the battery terminal, do not close either of the front doors. The automatic window adjusting function will not work and the side roof panel may be damaged.**

The power window has an automatic adjusting function. When the door is being opened, the window is automatically lowered slightly to avoid contact between the window and the side roof panel. When the door is closed, the window is automatically raised slightly.

While the automatic adjusting function does not work, the window will be controlled as follows:

- When the door is opened, the window lowers for approximately 2 seconds.
- While the door is open, the window cannot be raised.

## If the windows do not close automatically

If the power window automatic function (closing only) does not operate properly, perform the following procedure to initialize the power window system.

1. Push the ignition switch to the ON position.
2. Close the door and soft top (Roadster models).
3. Open the window completely by operating the power window switch.
4. Pull the power window switch and hold it to close the window, and then hold the switch more than 3 seconds after the window is closed completely.
5. Release the power window switch. Operate the window by the automatic function to confirm the initialization is complete.
6. Perform steps 2 through 5 above for other windows.

If the power window automatic function does not operate properly after performing the procedure above, have your vehicle checked. It is recommended you visit a NISSAN dealer for this service.

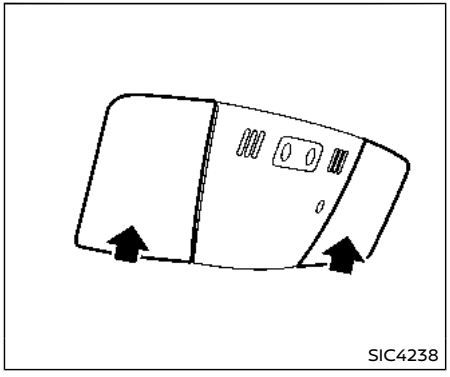


## MAP LIGHTS

Push the button as illustrated to turn the light on or off.

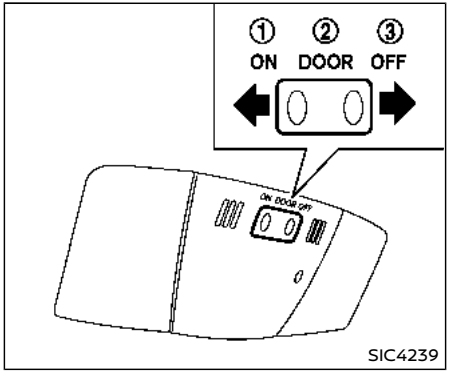


## INTERIOR LIGHT CONTROL SWITCH

The interior light control switch has three positions: ON, DOOR and OFF.

### ON position

When the switch is in the ON position ① the map lights will illuminate.

### DOOR position

When the switch is in the DOOR position ②, the map lights will illuminate under the following conditions:

- ignition switch is switched to the OFF or LOCK position
  — remain on for about 15 seconds.
- doors are unlocked by pushing the UNLOCK button on the Intelligent Key or door handle request switch with the ignition switch in the LOCK position
  — remain on for about 15 seconds.
- any door is opened and then closed with the ignition switch in the LOCK position
  — remain on for about 15 seconds.
- any door is opened with the ignition switch in the ACC or ON position
  — remain on while the door is opened. When the door is closed, the lights go off.

**The lights will also turn off after a period of time when the lights remain illuminated after the ignition switch has been pushed to the OFF or LOCK position to prevent the battery from becoming discharged.**

Models with navigation system:

When the auto interior illumination is set to the OFF position (see "Vehicle information and settings (models with navigation system)" (P.4-8)), the lights will illuminate under the following condition:

- any door is opened with the ignition switch in any position

— remain on while the door is opened. When the door is closed, the lights go off.

### OFF position

When the switch is in the OFF position ③, the lights will not illuminate, regardless of the condition.

**CAUTION**

**Do not use for extended periods of time with the engine stopped. This could result in a discharged battery.**

## VANITY MIRROR LIGHTS

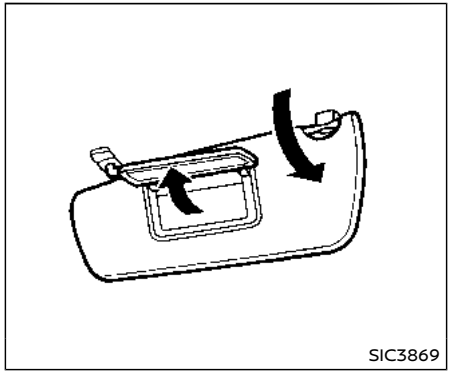


The light on the vanity mirror will turn on when the cover on the vanity mirror is opened.

When the cover is closed, the light will turn off.

**The lights will also turn off after a period of time when the lights remain illuminated to prevent the battery from becoming discharged.**

## CARGO AREA COURTESY LIGHT (Roadster models)

The light illuminates simultaneously with the map light. See “Interior lights” (P.2-50).

## CARGO LIGHT (Coupe models)

The light illuminates when the rear hatch is opened. When the rear hatch is closed, the light will turn off.

**The light will also turn off after a period of time when the light remains illuminated after the ignition switch has been pushed to the OFF or LOCK position to prevent the battery from becoming discharged.**

## TRUNK LIGHT (Roadster models)

The light illuminates when the trunk lid is opened. When the trunk lid is closed, the light turns off.

## HomeLink® UNIVERSAL TRANSCEIVER (if so equipped)

The HomeLink® Universal Transceiver provides a convenient way to consolidate the functions of up to three individual hand-held transmitters into one built-in device.

HomeLink® Universal Transceiver:

- Will operate most Radio Frequency (RF) devices such as garage doors, gates, home and office lighting, entry door locks and security systems.
- Is powered by your vehicle's battery. No separate batteries are required. If the vehicle's battery is discharged or is disconnected, HomeLink® will retain all programming.

**When the HomeLink® Universal Transceiver is programmed, retain the original transmitter for future programming procedures (Example: new vehicle purchases). Upon sale of the vehicle, the programmed HomeLink® Universal Transceiver buttons should be erased for security purposes. For additional information, refer to "Programming HomeLink®" (P.2-53).**

**WARNING**

- **Do not use the HomeLink® Universal Transceiver with any garage door opener that lacks safety**

**stop and reverse features as required by federal safety standards. (These standards became effective for opener models manufactured after April 1, 1982). A garage door opener which cannot detect an object in the path of a closing garage door and then automatically stop and reverse, does not meet current federal safety standards. Using a garage door opener without these features increases the risk of serious injury or death.**

- **During the programming procedure your garage door or security gate will open and close (if the transmitter is within range). Make sure that people or objects are clear of the garage door, gate, etc. that you are programming.**
- **Your vehicle's engine should be turned off while programming the HomeLink® Universal Transceiver. Do not breathe exhaust gases; they contain colorless and odorless carbon monoxide. Carbon monoxide is dangerous. It can cause unconsciousness or death.**

## PROGRAMMING HomeLink®

If you have any questions or are having difficulty programming your HomeLink® buttons, refer to the HomeLink® web site at: www.homelink.com or call 1-800-355-3515.

**NOTE:**

**It is also recommended that a new battery be placed in the hand-held transmitter of the device being programmed to HomeLink® for quicker programming and accurate transmission of the radio-frequency.**

1. Position the end of your hand-held transmitter 1-3 in (26-76 mm) away from the HomeLink® surface, keeping the HomeLink® indicator light ① in view.

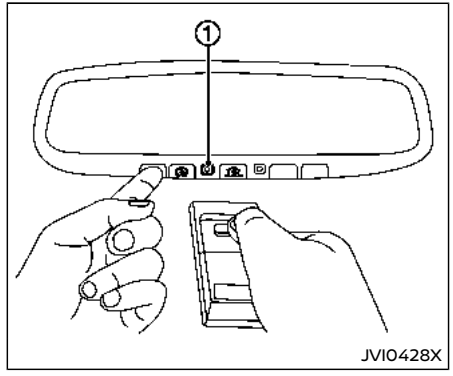


2. Using both hands, simultaneously press and hold the desired HomeLink® button and handheld transmitter button. DO NOT release until the HomeLink® indicator light ① flashes slowly and then rapidly. When the indicator light flashes rapidly, both buttons may be released. (The rapid flashing indicates successful programming.)

   **NOTE:**
   **Some devices to be programmed may require you to replace Step 2 with the cycling procedure noted in the "Programming HomeLink® for Canadian customers and gate openers" (P.2-54).**

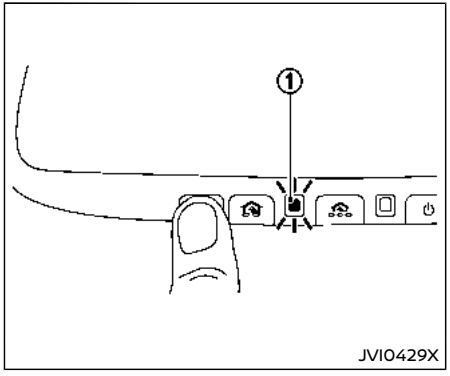


3. Press and hold the programmed HomeLink® button and observe the indicator light.
   - If the indicator light ① is solid/continuous, programming is complete and your device should activate when the HomeLink® button is pressed and released.
   - If the indicator light ① blinks rapidly for two seconds and then turns to a solid/continuous light, continue with Steps 4-6 for a rolling code device. A second person may make the following steps easier. Use a ladder or other device. Do not stand on your vehicle to perform the next steps.
4. At the receiver located on the garage door opener motor in the garage, locate the "learn" or "smart" button (the name and color of the button may vary by manufacturer but it is usually located near where the hanging antenna wire is attached to the unit). If there is difficulty locating the button, reference the garage door opener's manual.
5. Press and release the "learn" or "smart" button.

   **NOTE:**
   **Once the button is pressed, you have approximately 30 seconds to initiate the next step.**
6. Return to the vehicle and firmly press and hold the programmed HomeLink® button for two seconds and release. Repeat the "press/hold/release" sequence up to 3 times to complete the programming process. HomeLink® should now activate your rolling code equipped device.
7. If you have any questions or are having difficulty programming your HomeLink® buttons, refer to the HomeLink® web site at: www.homelink.com or call 1-800-355-3515.

## PROGRAMMING HomeLink® FOR CANADIAN CUSTOMERS AND GATE OPENERS

Canadian radio-frequency laws require transmitter signals to "time-out" (or quit) after several seconds of transmission – which may not be long enough for HomeLink® to pick up the signal during programming. Similar to this Canadian law, some U.S. gate operators are designed to "time-out" in the same manner.

If you live in Canada or you are having difficulties programming a gate operator or garage door opener by using the "Programming HomeLink®" procedures, replace "Programming HomeLink®" Step 2 with the following:

**NOTE:**

**When programming a garage door opener, etc., unplug the device during the "cycling" process to prevent possible damage to the garage door opener components.**

Step 2: Using both hands, simultaneously press and hold the desired HomeLink® button and the hand-held transmitter button. During programming, your hand-held transmitter may automatically stop transmitting. Continue to press and hold the desired HomeLink® button while you press and re-press ("cycle") your hand-

held transmitter every two seconds until the frequency signal has been learned. The HomeLink® indicator light will flash slowly and then rapidly after several seconds upon successful programming. **DO NOT** release until the HomeLink® indicator light flashes slowly and then rapidly. When the indicator light flashes rapidly, both buttons may be released. The rapid flashing indicates successful programming.

Proceed with "Programming HomeLink®" step 3 to complete.

Remember to plug the device back in when programming is completed.

## OPERATING THE HomeLink® UNIVERSAL TRANSCEIVER

The HomeLink® Universal Transceiver, after it is programmed, can be used to activate the programmed device. To operate, simply press and release the appropriate programmed HomeLink® Universal Transceiver button. The amber indicator light will illuminate while the signal is being transmitted.

For convenience, the hand-held transmitter of the device may also be used at any time.

## PROGRAMMING TROUBLESHOOTING

If the HomeLink® does not quickly learn the hand-held transmitter information:

- replace the hand-held transmitter batteries with new batteries.
- position the hand-held transmitter with its battery area facing away from the HomeLink® surface.
- press and hold both the HomeLink® and hand-held transmitter buttons without interruption.
- position the hand-held transmitter 1-3 in (26-76 mm) away from the HomeLink® surface. Hold the transmitter in that position for up to 15 seconds. If HomeLink® is not programmed within that time, try holding the transmitter in another position - keeping the indicator light in view at all times.

If you have any questions or are having difficulty programming your HomeLink® buttons, refer to the HomeLink® web site at: www.homelink.com or 1-800-355-3515.

## CLEARING THE PROGRAMMED INFORMATION

The following procedure clears the programmed information from both buttons. Individual buttons cannot be cleared. However, individual buttons can be reprogrammed, see "Reprogramming a single HomeLink® button" (P.2-55).

### To clear all programming

1. Press and hold the two outer HomeLink® buttons until the indicator light begins to flash in approximately 10 seconds. Do not hold for longer than 20 seconds.
2. Release both buttons.

HomeLink® is now in the programming mode and can be programmed at any time beginning with "Programming HomeLink®" - Step 1.

## REPROGRAMMING A SINGLE HomeLink® BUTTON

To reprogram a HomeLink® Universal Transceiver button, complete the following.

1. Press and hold the desired HomeLink® button. **DO NOT** release the button.
2. The indicator light will begin to flash after 20 seconds. Without releasing the HomeLink® button, proceed with

"Programming HomeLink®" - Step 1.

For questions or comments, contact HomeLink® at: www.homelink.com or 1-800-355-3515.

The HomeLink® Universal Transceiver button has now been reprogrammed. The new device can be activated by pushing the HomeLink® button that was just programmed. This procedure will not affect any other programmed HomeLink® buttons.

## IF YOUR VEHICLE IS STOLEN

If your vehicle is stolen, you should change the codes of any non-rolling code device that has been programmed into HomeLink®. Consult the Owner's Manual of each device or call the manufacturer or retailer of those devices for additional information.

**When your vehicle is recovered, you will need to reprogram the HomeLink® Universal Transceiver with your new transmitter information.**

**FCC Notice:**

**For USA:**

**This device complies with Part 15 of the FCC Rules. Operation is subject to the following two conditions: (1) This device may not cause harmful interference, and (2) this device must accept any interference received, including interference that may cause undesired operation.**

**NOTE:**

**Changes or modifications not expressly approved by the party responsible for compliance could void the user's authority to operate the equipment.**

**For Canada:**

**This device complies with Industry Canada licence-exempt RSS standard(s). Operation is subject to the following two conditions: (1) this device may not cause interference, and (2) this device must accept any interference, including interference that may cause undesired operation of the device.**

# 3 Pre-driving checks and adjustments


Keys ..... 3-3
Intelligent Key ..... 3-3
Valet hand-off ..... 3-4
Doors ..... 3-5
Locking with mechanical key ..... 3-5
Opening and closing windows with the mechanical key ..... 3-5
Locking with inside lock knob ..... 3-6
Locking with power door lock switch ..... 3-6
Automatic door locks ..... 3-6
Intelligent Key system ..... 3-7
Intelligent Key operating range ..... 3-9
Door locks/unlocks precaution ..... 3-9
Intelligent Key operation ..... 3-10
Battery saver system ..... 3-12
Warning signals ..... 3-12
Troubleshooting guide ..... 3-13
Remote keyless entry system ..... 3-14
How to use remote keyless entry system ..... 3-14
Hood ..... 3-17
Rear hatch (Coupe models) ..... 3-18
Rear hatch opener switch ..... 3-18
Rear hatch release switch ..... 3-19
Secondary rear hatch release ..... 3-20
Trunk lid (Roadster models) ..... 3-20
Trunk lid opener switch ..... 3-21
Trunk release power cancel switch ..... 3-21
Interior trunk lid release ..... 3-21
Secondary trunk lid release ..... 3-22
Soft top (Roadster models) ..... 3-23
Before operating the top ..... 3-23
When operating the top ..... 3-25
Opening the top ..... 3-27
Closing the top ..... 3-27
Opening the top using the Intelligent Key ..... 3-28
Troubleshooting guide ..... 3-29
If the top does not open or close electrically ..... 3-30
Care of the soft top and the vehicle body ..... 3-33
Front, side and rear unique parts (NISMO models) ..... 3-34
Fuel-filler door ..... 3-35
Opening the fuel-filler door ..... 3-35
Fuel-filler cap ..... 3-36
Tilt steering ..... 3-38
Manual operation ..... 3-38
Sun visors ..... 3-38

Mirrors ..... 3-39
Inside mirror ..... 3-39
Outside mirrors ..... 3-40
Vanity mirror ..... 3-41

## KEYS

A key number plate is supplied with your keys. Record the key number and keep it in a safe place (such as your wallet), not in the vehicle. If you lose your keys, it is recommended you visit a NISSAN dealer for duplicates by using the key number. NISSAN does not record any key numbers so it is very important to keep track of your key number plate.

A key number is only necessary when you have lost all keys and do not have one to duplicate from. If you still have a key, it can be duplicated without knowing the key number.

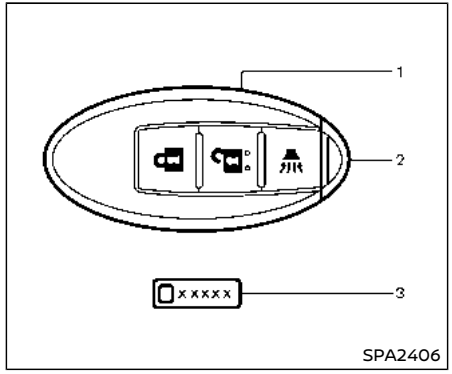


1. Intelligent Keys (2)
2. Mechanical keys (inside the Keys) (2)
3. Key number plate (1)

### INTELLIGENT KEY

Your vehicle can only be driven with the Intelligent Keys which are registered to your vehicle's Intelligent Key system components and NISSAN Vehicle Immobilizer System components. As many as 4 Intelligent Keys can be registered and used with one vehicle. The new keys must be registered by a NISSAN dealer prior to use with the Intelligent Key system and NISSAN Vehicle Immobilizer System of your vehicle. Since the registration process requires erasing all memory in the Intelligent Key components when registering new keys, be sure to take all Intelligent Keys that you have to the NISSAN dealer.

It is possible that the Intelligent Key functions become canceled. Contact a NISSAN dealer.

**CAUTION**

- **Be sure to carry the Intelligent Key with you when driving. The Intelligent Key is a precision device with a built-in transmitter. To avoid damaging it, please note the following.**
  - **The Intelligent Key is water resistant; however, wetting may damage the Intelligent Key. If the Intelligent Key gets wet, immediately wipe until it is completely dry.**
  - **Do not bend, drop or strike it against another object.**
  - **If the outside temperature is below 14°F (-10°C) degrees, the battery of the Intelligent Key may not function properly.**
  - **Do not place the Intelligent Key for an extended period in**

a place where temperatures exceed 140°F (60°C).

— Do not change or modify the Intelligent Key.

— Do not use a magnet key holder.

— Do not place the Intelligent Key near an electric appliance such as a television set, personal computer or cellular phone.

— Do not allow the Intelligent Key to come into contact with water or salt water, and do not wash it in a washing machine. This could affect the system function.

- If an Intelligent Key is lost or stolen, NISSAN recommends erasing the ID code of that Intelligent Key. This will prevent the Intelligent Key from unauthorized use to unlock the vehicle. For information regarding the erasing procedure, it is recommended you visit a NISSAN dealer.

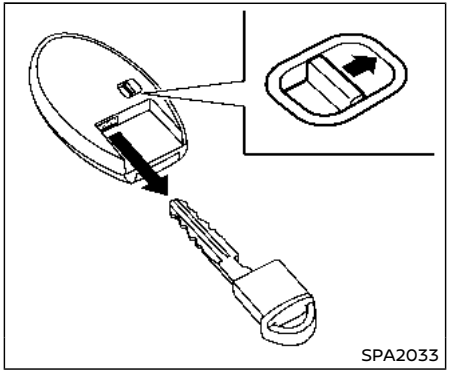


## Mechanical key

To remove the mechanical key, release the lock knob at the back of the Intelligent Key.

To install the mechanical key, firmly insert it into the Intelligent Key until the lock knob returns to the lock position.

Use the mechanical key to lock or unlock the doors, and glove box.

See “Doors” (P.3-5) and “Storage” (P.2-43).

**CAUTION**

**Always carry the mechanical key installed in the Key.**

## VALET HAND-OFF

When you have to leave a key with a valet, give them the Intelligent Key itself and keep the mechanical key with you to protect your belongings.

To prevent the glove box from being opened during valet hand-off, follow the procedures below.

1. Push the trunk release power cancel switch to the OFF side (Roadster models).
2. Remove the mechanical key from the Intelligent Key.
3. Lock the glove box with the mechanical key.
4. Hand the Intelligent Key to the valet, keeping the mechanical key in your pocket or bag for insertion into the Intelligent Key when you retrieve your vehicle.

See “Storage” (P.2-43).

## WARNING

- **Always have the doors locked while driving. Along with the use of seat belts, this provides greater safety in the event of an accident by helping to prevent persons from being thrown from the vehicle. This also helps keep children and others from unintentionally opening the doors, and will help keep out intruders.**
- **Before opening any door, always look for and avoid oncoming traffic.**
- **To help avoid risk of injury or death through unintended operation of the vehicle and or its systems, including entrapment in windows or inadvertent door lock activation, do not leave children, people who require the assistance of others or pets unattended in your vehicle. Additionally, the temperature inside a closed vehicle on a warm day can quickly become high enough to cause a significant risk of injury or death to people and pets.**

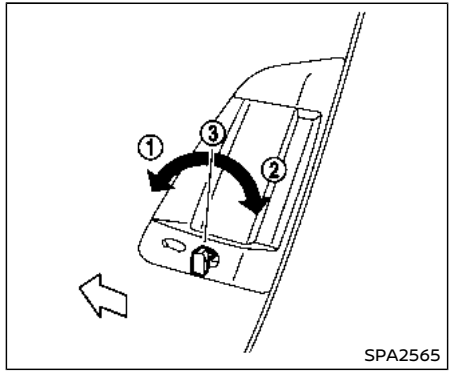


### LOCKING WITH MECHANICAL KEY

The power door lock system allows you to lock or unlock all doors simultaneously using the mechanical key.

- Turning the driver's door key cylinder to the front of the vehicle ① will lock all doors.
- Turning the driver's door key cylinder once to the rear of the vehicle ② will unlock the driver's door. After returning the key to the neutral position ③, turning it to the rear again within 60 seconds will unlock all doors.
- You can switch the lock system to the mode that allows you to open all the doors when the key is turned once. (See "How to use SETTING button" (P.4-11).)

### OPENING AND CLOSING WINDOWS WITH THE MECHANICAL KEY

The driver's door key operation also allows you to open and close the window that is equipped with the automatic open/close function. (See "Power windows" (P.2-46).)

To open the window, turn the driver's door key cylinder to the rear of the vehicle for **longer than 1 second**. The door is unlocked and the window keeps opening while turning the key.

This function can also be performed by pushing and holding the UNLOCK button on the Intelligent Key. (See "Remote keyless entry system" (P.3-14).)

To close the window, turn the driver's door key cylinder to the front of the vehicle for **longer than 1 second**. The door is locked and the window keeps closing while turning the key.

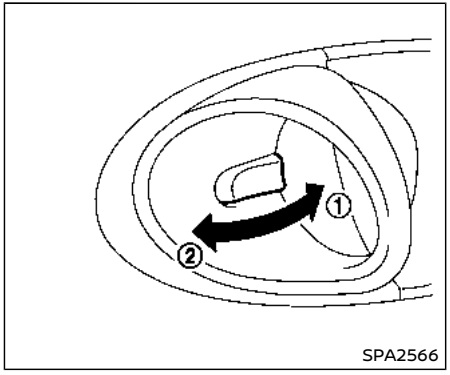

SPA2566

## LOCKING WITH INSIDE LOCK KNOB

To lock the door individually, move the inside lock knob to the lock position ① then close the door.

To unlock, move the inside lock knob to the unlock position ②.

**When locking the door without an Intelligent Key, be sure not to leave the Intelligent Key inside the vehicle.**

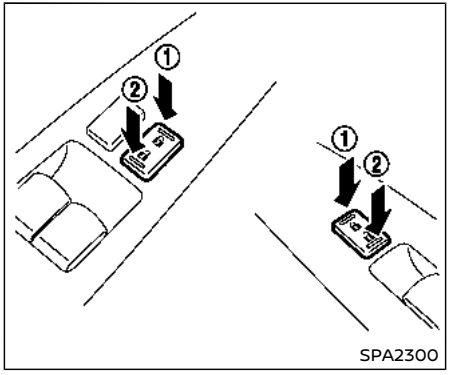

SPA2300

## LOCKING WITH POWER DOOR LOCK SWITCH

Operating the power door lock switch will lock or unlock all the doors and trunk lid. The switches are located on the driver's and front passenger's door armrests.

To lock the doors and trunk lid, push the power door lock switch to the lock position ① with the driver's or front passenger's door open, then close the door and trunk lid.

**When locking the door this way, be certain not to leave the Intelligent Key inside the vehicle.**

To unlock the doors, the fuel-filler door and the trunk, push the power door lock switch to the unlock position ②.

### Lockout protection

When the power door lock switch (driver or front passenger) is moved to the lock position with the Intelligent Key in the port and any door open, all doors and the trunk lid will lock and unlock automatically. With the Intelligent Key left in the vehicle (not in the Intelligent Key port) and any door open, all doors and the trunk lid will unlock automatically and a chime will sound after the door and/or the trunk lid are closed.

These functions help to prevent the Intelligent Key from being accidentally locked inside the vehicle.

## AUTOMATIC DOOR LOCKS

- All doors lock automatically when the vehicle speed reaches 15 MPH (24 km/h).
- All doors unlock automatically when the ignition switch is placed in the OFF position.

**The automatic unlock function can be deactivated or activated.** To deactivate or activate the automatic door unlock system, perform the following procedure:

1. Close all doors.
2. Place the ignition switch in the ON position.

3. Within 20 seconds of performing Step 2, push and hold the power door lock switch to the 🔓 position (UNLOCK) for more than 5 seconds.
4. When activated, the hazard indicator will flash twice. When deactivated, the hazard indicator will flash once.
5. The ignition switch must be placed in the OFF and ON position again between each setting change.

When the automatic door unlock system is deactivated, the doors do not unlock when the ignition switch is placed in the OFF position. To unlock the door manually, use the inside lock knob or the power door lock switch (driver's or front passenger's side).

**⚠ WARNING**

- **Radio waves could adversely affect electric medical equipment. Those who use a pacemaker should contact the electric medical equipment manufacturer for the possible influences before use.**
- **The Intelligent Key transmits radio waves when the buttons are pushed. The FAA advises that the radio waves may affect aircraft navigation and communication systems. Do not operate the Intelligent Key while on an airplane. Make sure the buttons are not operated unintentionally when the unit is stored during a flight.**

The Intelligent Key system can operate all the door and rear hatch/trunk lid locks using the remote controller function or pushing the request switch on the vehicle without taking the key out from a pocket or purse. The operating environment and/or conditions may affect the Intelligent Key system operation.

Be sure to read the following before using the Intelligent Key system.

**⚠ CAUTION**

- **Be sure to carry the Intelligent Key with you when operating the vehicle.**
- **Never leave the Intelligent Key in the vehicle when you leave the vehicle.**

The Intelligent Key is always communicating with the vehicle as it receives radio waves. The Intelligent Key system transmits weak radio waves. Environmental conditions may interfere with the operation of the Intelligent Key system under the following operating conditions.

- When operating near a location where strong radio waves are transmitted, such as a TV tower, power station and broadcasting station.
- When in possession of wireless equipment, such as a cellular telephone, transceiver, and CB radio.
- When the Intelligent Key is in contact with or covered by metallic materials.
- When any type of radio wave remote control is used nearby.
- When the Intelligent Key is placed near an electric appliance such as a personal computer.

- When the vehicle is parked near a parking meter.

In such cases, correct the operating conditions before using the Intelligent Key function or use the mechanical key.

Although the life of the battery varies depending on the operating conditions, the battery's life is approximately 2 years. If the battery is discharged, replace it with a new one.

When the Intelligent Key battery is almost discharged, insert the Intelligent Key into the Intelligent Key port to start the engine. Replace the discharged battery with a new one as soon as possible. For more details, see "Push-button ignition switch" (P.5-8).

Since the Intelligent Key is continuously receiving radio waves, if the key is left near equipment which transmits strong radio waves, such as signals from a TV and personal computer, the battery life may become shorter.

For information regarding replacement of a battery, see "Intelligent Key battery replacement" (P.8-20).

As many as 4 Intelligent Keys can be registered and used with one vehicle. For information about the purchase and use of additional Intelligent Keys, contact a NISSAN dealer.

**CAUTION**

- **Do not allow the Intelligent Key, which contains electrical components, to come into contact with water or salt water. This could affect the system function.**
- **Do not drop the Intelligent Key.**
- **Do not strike the Intelligent Key sharply against another object.**
- **Do not change or modify the Intelligent Key.**
- **Wetting may damage the Intelligent Key. If the Intelligent Key gets wet, immediately wipe until it is completely dry.**
- **If the outside temperature is below 14°F (–10°C), the battery of the Intelligent Key may not function properly.**
- **Do not place the Intelligent Key for an extended period in an area where temperatures exceed 140°F (60°C).**
- **Do not attach the Intelligent Key with a key holder that contains a magnet.**
- **Do not place the Intelligent Key near equipment that produces a magnetic field, such as a TV, audio equipment, personal computer or cellular phone.**

If an Intelligent Key is lost or stolen, NISSAN recommends erasing the ID code of that Intelligent Key from the vehicle. This may prevent the unauthorized use of the Intelligent Key to operate the vehicle. For information regarding the erasing procedure, contact a NISSAN dealer.

The Intelligent Key function can be disabled. For information about disabling the Intelligent Key function, contact a NISSAN dealer.

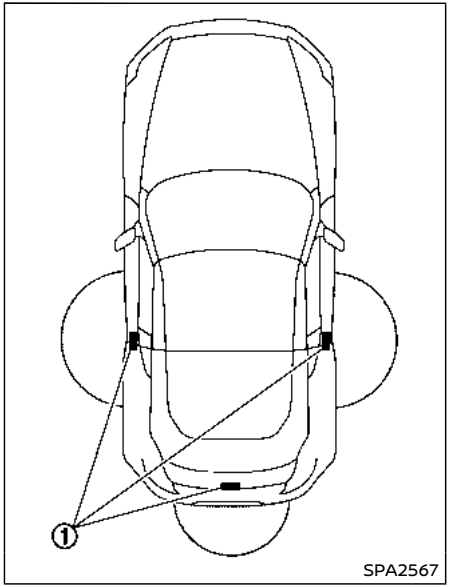


## INTELLIGENT KEY OPERATING RANGE

The Intelligent Key functions can only be used when the Intelligent Key is within the specified operating range from the request switch ①.

When the Intelligent Key battery is discharged or strong radio waves are present near the operating location, the Intelligent Key system's operating range becomes narrower, and the Intelligent Key may not function properly.

The operating range is within 31.50 in (80 cm) from each request switch ①.

If the Intelligent Key is too close to the door glass, handle or rear bumper the request switches may not function.

When the Intelligent Key is within the operating range, it is possible for anyone who does not carry the Intelligent Key to push the request switch to lock/unlock the doors including the rear hatch/trunk lid.

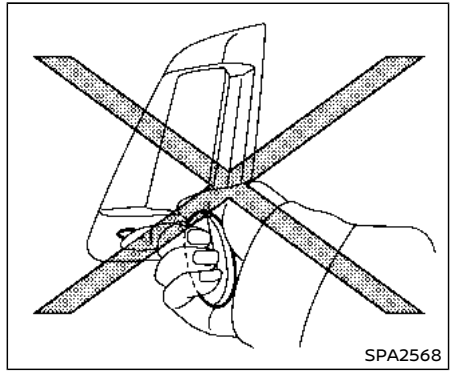


## DOOR LOCKS/UNLOCKS PRECAUTION

- Do not push the door handle request switch with the Intelligent Key held in your hand as illustrated. The close distance to the door handle will cause the Intelligent Key system to have difficulty recognizing that the Intelligent Key is outside the vehicle.
- After locking with the door handle request switch, verify the doors are securely locked by testing them.
- To prevent the Intelligent Key from being left inside the vehicle, make sure you carry the key with you and then lock the doors.

- Do not pull the door handle before pushing the door handle request switch. The door will be unlocked but will not open. Release the door handle once and pull it again to open the door.
- Models with navigation system:

  The Intelligent Key system (opening/closing doors with the door handle request switch) can be set to remain inactive. (See "Vehicle information and settings (models with navigation system)" (P.4-8).)

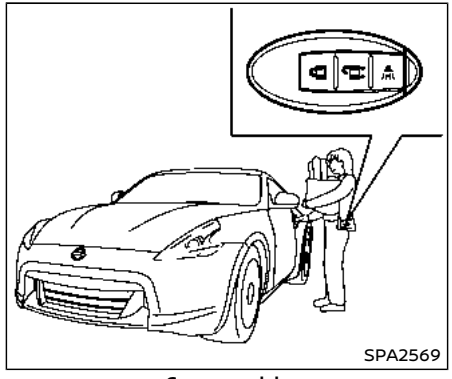


**Coupe models**

## INTELLIGENT KEY OPERATION

You can lock or unlock the doors without taking the key out from your pocket or bag.

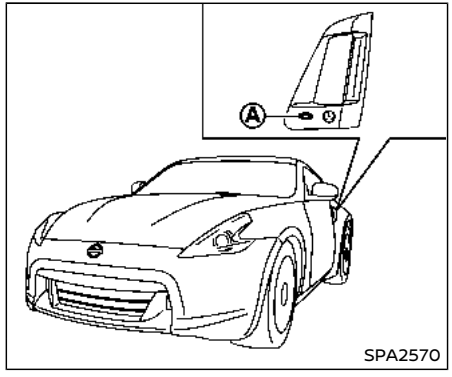


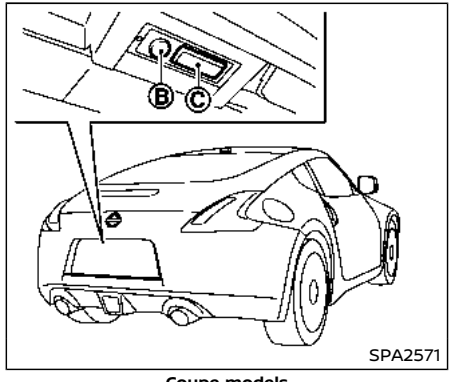


**Coupe models**

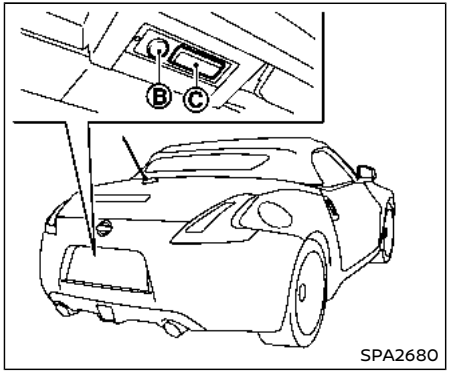


**Roadster models**

When you carry the Intelligent Key with you, you can lock or unlock all doors and the rear hatch/trunk lid by pushing the door handle request switch (driver's or front passenger's) Ⓐ or the rear hatch/trunk request switch Ⓑ within the range of operation.

When you lock or unlock the doors and the rear hatch/trunk lid, the hazard indicator will flash and the horn (or the outside chime) will sound as a confirmation. For details, see "Setting hazard indicator and horn mode" (P.3-15).

## Locking doors, rear hatch/trunk lid and fuel-filler door

1. Push the ignition switch to the OFF position and make sure you carry the Intelligent Key with you.*1
2. Close all the doors and the rear hatch/trunk lid.*2
3. Push the door handle request switch (driver's or front passenger's) or the rear hatch/trunk request switch while carrying the Intelligent Key with you.*3
4. All the doors, rear hatch/trunk lid and fuel-filler door will lock.
5. The hazard indicator flashes twice and the outside chime sounds twice.

*1: Doors and the rear hatch/trunk lid will lock with the Intelligent Key while the ignition switch is in the ACC or ON position.

*2: Doors and the rear hatch/trunk lid will not lock with the Intelligent Key while any door or the rear hatch/trunk lid is open.

*3: Doors and the rear hatch/trunk lid will not lock by pushing the door handle request switch or the rear hatch/trunk request switch with the Intelligent Key inside the vehicle. However, when an Intelligent Key is inside the vehicle, doors and the rear hatch/trunk lid can be locked with another registered Intelligent Key.

## Unlocking doors, rear hatch/trunk lid and fuel-filler door

1. Push the door handle request switch (driver's or front passenger's) or the rear hatch/trunk request switch once while carrying the Intelligent Key with you.
2. The hazard indicator flashes once and outside chime sounds once. The corresponding door and the fuel-filler door or the rear hatch/trunk lid will unlock.
3. Push the door handle request switch or the rear hatch/trunk request switch again within 60 seconds.
4. The hazard indicator flashes once and outside chime sounds once again. All the doors and the rear hatch/trunk lid will unlock.

All doors, the rear hatch/trunk lid and the fuel-filler door will be locked automatically unless one of the following operations is performed within 1 minute after pushing the request switch while the doors are locked.

- Opening any door and/or the rear hatch/trunk lid
- Pushing the ignition switch
- Inserting the Intelligent Key into the Intelligent Key port.

During this 1-minute time period, if the UNLOCK button on the Intelligent Key is pushed, all doors will be locked automatically after another 1 minute.

## Opening rear hatch/trunk lid

To open only the rear hatch/trunk lid, perform the following procedure.

1. Carry the Intelligent Key.
2. Push the rear hatch/trunk lid opener switch.
3. The rear hatch/trunk lid will open.

**Lockout protection:**

To prevent the Intelligent Key from being accidentally locked in the trunk, lockout protection is equipped with the Intelligent Key system.

When the trunk lid is closed with the Intelligent Key inside the trunk, the outside buzzer will sound and all doors and the trunk lid will unlock.

## BATTERY SAVER SYSTEM

When all the following conditions are met for a period of time, the battery saver system will cut off the power supply to prevent battery discharge.

- The ignition switch is in the ACC position, and
- All doors are closed, and
- The shift lever is in the P (Park) position (Automatic Transmission models).

## WARNING SIGNALS

To help prevent the vehicle from moving unexpectedly by erroneous operation of the Intelligent Key listed on the following chart or to help prevent the vehicle from being stolen, chime or beep sounds inside and outside the vehicle and a warning displays in the vehicle information display.

When a chime or beep sounds or the warning displays, be sure to check the vehicle and Intelligent Key.

See "Troubleshooting guide" (P.3-13) and "Vehicle information display" (P.2-19).

## TROUBLESHOOTING GUIDE

| Symptom | | Possible cause | Action to take |
|---|---|---|---|
| When pushing the ignition switch to stop the engine | The SHIFT P warning appears on the display and the inside warning chime sounds continuously (Automatic Transmission models). | The shift lever is not in the P (Park) position. | Shift the shift lever to the P (Park) position. |
| When opening the driver's door to get out of the vehicle | The inside warning chime sounds continuously. | The ignition switch is in the ACC position. | Push the ignition switch to the OFF position. |
| | | The Intelligent Key is in the Intelligent Key port. | Remove the Intelligent Key from the Intelligent Key port. |
| When closing the door after getting out of the vehicle | The NO KEY warning appears on the display, the outside chime sounds 3 times and the inside warning chime sounds for approximately a few seconds. | The ignition switch is in the ACC or ON position. | Push the ignition switch to the OFF position. |
| | The SHIFT P warning appears on the display and the outside chime sounds continuously (Automatic Transmission models). | The ignition switch is in the ACC or OFF position and the shift lever is not in the P (Park) position. | Move the shift lever to the P (Park) position and push the ignition switch to the OFF position. |
| When closing the door with the inside lock knob turned to LOCK | The outside chime sounds for a few seconds and all the doors unlock. | The Intelligent Key is inside the vehicle and cargo/trunk room area. | Carry the Intelligent Key with you. |
| When pushing the door handle request switch to lock the door | The outside chime sounds for a few seconds. | The Intelligent Key is inside the vehicle and cargo/trunk room area. | Carry the Intelligent Key with you. |
| | | A door is not closed securely. | Close the door securely. |
| When closing the trunk lid (Roadster models) | The outside chime sounds for a few seconds and all doors unlock. | The Intelligent Key is inside the trunk. | Carry the Intelligent Key with you. |
| When shifting the shift lever to the P (Park) position (Automatic Transmission models) | The inside warning chime sounds continuously. | The ignition switch is in the ON position. | The ignition switch is in the OFF position. |

**WARNING**

**The Intelligent Key transmits radio waves when the buttons are pushed. The FAA advises that the radio waves may affect aircraft navigation and communication systems. Do not operate the Intelligent Key while on an airplane. Make sure the buttons are not operated unintentionally when the unit is stored during a flight.**

It is possible to lock/unlock all doors, fuel-filler door, activate the panic alarm and open the windows by pushing the buttons on the Intelligent Key from outside the vehicle.

**Before locking the doors, make sure the Intelligent Key is not left in the vehicle.**

The LOCK/UNLOCK button on the Intelligent Key can operate at a distance of approximately 33 ft (10 m) from the vehicle. (The effective distance depends upon the conditions around the vehicle.)

As many as 4 Intelligent Keys can be used with one vehicle. For information concerning the purchase and use of additional Intelligent Keys, contact a NISSAN dealer.

The lock and unlock buttons on the Intelligent Key will not operate when:

- the distance between the Intelligent Key and the vehicle is over 33 ft (10 m).
- the Intelligent Key battery is discharged.

After locking with the remote keyless entry function, pull the door handle to make sure the doors are securely locked.

The LOCK/UNLOCK operating range varies depending on the environment. To securely operate the lock and unlock buttons, approach the vehicle to about 3 ft (1 m) from the door.

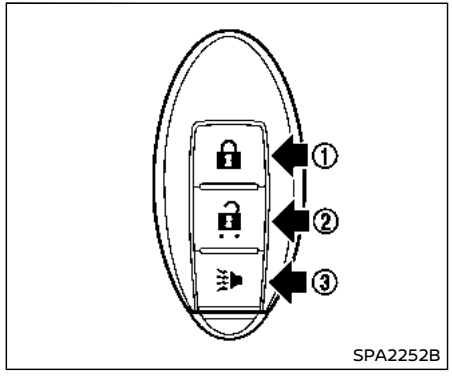


1. LOCK button
2. UNLOCK button
3. PANIC button

## HOW TO USE REMOTE KEYLESS ENTRY SYSTEM

When you lock or unlock the doors and rear hatch/trunk lid, the hazard indicator will flash and the horn (or the outside chime) will sound as a confirmation. For details, see “Setting hazard indicator and horn mode” (P.3-15).

## Locking doors, rear hatch/trunk lid and fuel-filler door

1. Push the ignition switch to the OFF position and make sure you carry the Intelligent Key with you.*
2. Close all the doors and the rear hatch/trunk lid.
3. Push the LOCK button ① on the Intelligent Key.
4. All the doors, the rear hatch/trunk lid and fuel-filler door will lock.
5. The hazard indicator flashes twice and the horn chirps once.

*: Doors and the rear hatch/trunk lid will lock with the Intelligent Key while the ignition switch is in the ACC or ON position.

## Unlocking doors, rear hatch/trunk lid and fuel-filler door

1. Push the UNLOCK button ② on the Intelligent Key once.
2. The hazard indicator flashes once. The driver's door and fuel-filler door will unlock.
3. Push the UNLOCK button on the Intelligent Key again within 60 seconds.
4. The hazard indicator flashes once again. All the doors and the rear hatch/trunk lid will unlock.

All doors and the rear hatch/trunk lid will be locked automatically unless one of the following operations is performed within 1 minute after pushing the UNLOCK button on the Intelligent Key while the doors are locked. If during this 1-minute time period, the UNLOCK button on the Intelligent Key is pushed, all doors and the rear hatch/trunk lid will be locked automatically after another 1 minute.

- Opening any door
- Pushing the ignition switch
- Inserting the Intelligent Key into the Intelligent Key port

## Opening windows

The UNLOCK button operation also allows you to open a window that is equipped with the automatic open/close function. (See "Power windows" (P.2-46).)

To open the window, push the door UNLOCK button ② on the Intelligent Key for **about 3 seconds** after the door is unlocked.

To stop opening, release the UNLOCK button.

Window cannot be closed using the Intelligent Key.

The door window can be opened or closed by turning the metal key in a door lock. (See "Doors" (P.3-5).)

## Using panic alarm

If you are near your vehicle and feel threatened, you may activate the alarm to call attention as follows:

1. Push the PANIC button ③ on the Key for **more than 1 second.**
2. The theft warning alarm and headlights will stay on for 25 seconds.
3. The panic alarm stops when:
   - It has run for 25 seconds, or
   - Any of the buttons on the Intelligent Key are pushed. (Note: Panic button should be pushed for more than 1 second.)

## Setting hazard indicator and horn mode

This vehicle is set in hazard indicator and horn mode when you first receive the vehicle.

In hazard indicator and horn mode, when the LOCK button ① is pushed, the hazard indicator flashes twice and the horn chirps once. When the UNLOCK button ② is pushed, the hazard indicator flashes once.

If horns are not necessary, the system can be switched to the hazard indicator mode.

In hazard indicator mode, when the LOCK button is pushed, the hazard indicator flashes twice. When the UNLOCK button is pushed, neither the hazard indicator nor the horn operates.

**Hazard indicator and horn mode:**

| | DOOR LOCK | DOOR UNLOCK |
|---|---|---|
| **Intelligent Key system** (Using door handle or rear hatch/ trunk request switch) | HAZARD - **twice**<br>OUTSIDE CHIME - **twice** | HAZARD - **once**<br>OUTSIDE CHIME - **once** |
| **Remote keyless entry system** (Using or button) | HAZARD - **twice**<br>HORN - **once** | HAZARD - **once**<br>HORN - none |

**Hazard indicator mode:**

| | DOOR LOCK | DOOR UNLOCK |
|---|---|---|
| **Intelligent Key system** (Using door handle or rear hatch/ trunk request switch) | HAZARD - **twice**<br>OUTSIDE CHIME - none | HAZARD - none<br>OUTSIDE CHIME - none |
| **Remote keyless entry system** (Using or button) | HAZARD - **twice**<br>HORN - none | HAZARD - none<br>HORN - none |

**Switching procedure:**

To switch the hazard indicator and horn (chime) operation, push the LOCK ① and UNLOCK ② buttons on the Intelligent Key simultaneously for more than 2 seconds.

- When the hazard indicator mode is set, the hazard indicator flashes 3 times.
- When the hazard indicator and horn mode is set, the hazard indicator flashes once and the horn chirps once.

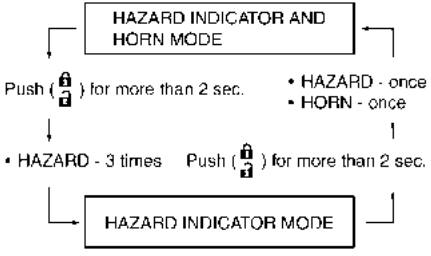


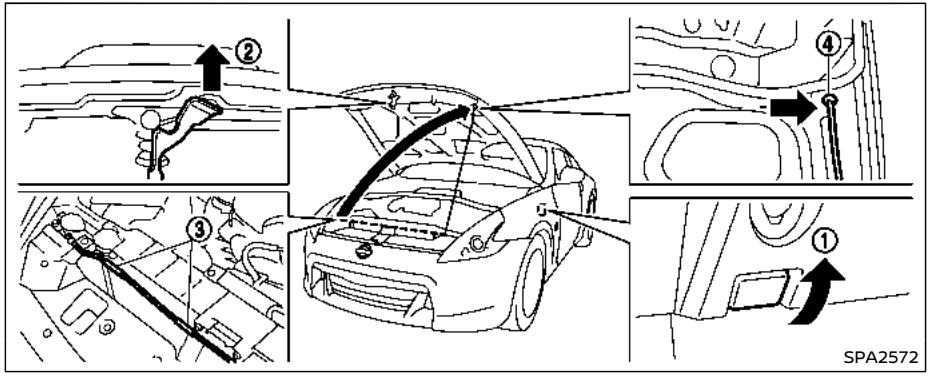


When opening the hood:

1. Pull the hood lock release handle ① located below the instrument panel; the hood will then spring up slightly.
2. Pull the lever ② up at the front of the hood with your fingertips and raise the hood.
3. Hold the insulator ③ of the support rod and insert its end into the slot ④ on the front edge of the hood.

When closing the hood:

1. While supporting the hood, return the support rod to its original position.
2. Slowly lower the hood to about 8 to 12 in (20 to 30 cm) above the hood lock, then let it drop.
3. Make sure it is securely latched.

**WARNING**

- **Make sure the hood is completely closed and latched before driving. Failure to do so could cause the hood to fly open and result in an accident.**
- **If you see steam or smoke coming from the engine compartment, to avoid injury do not**

**open the hood.**

**WARNING**

**Do not drive with the rear hatch open. This could allow dangerous exhaust gases to be drawn into the vehicle. See "Exhaust gas (carbon monoxide)" (P.5-2) of this manual.**

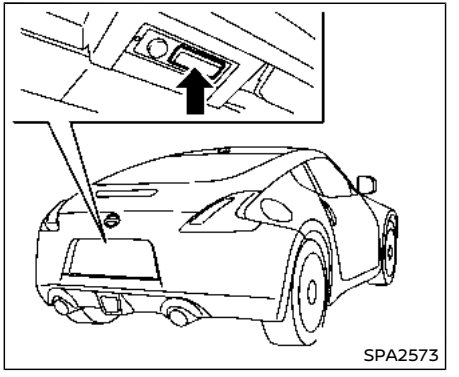


## REAR HATCH OPENER SWITCH

The rear hatch can be opened by pushing the rear hatch opener switch when the Intelligent Key is within the operating range of the rear hatch lock/unlock function regardless of the inside lock knob position. (See "Intelligent Key system" (P.3-7).)

To close the rear hatch, push it down securely.

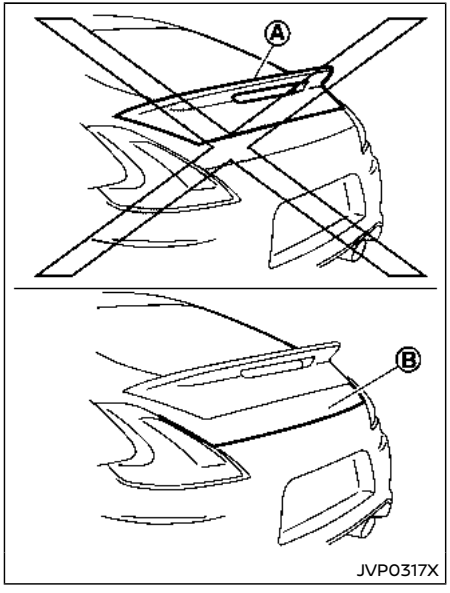


NISMO models

**CAUTION**

**Do not use the rear spoiler Ⓐ to open or close the rear hatch. Doing so may damage the rear spoiler.**

Always hold area Ⓑ to open or close the rear hatch.

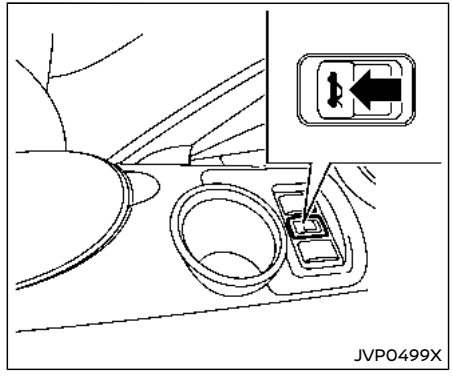


## REAR HATCH RELEASE SWITCH

The rear hatch release switch is located on the center console.

Pull the rear hatch release switch to release the rear hatch.

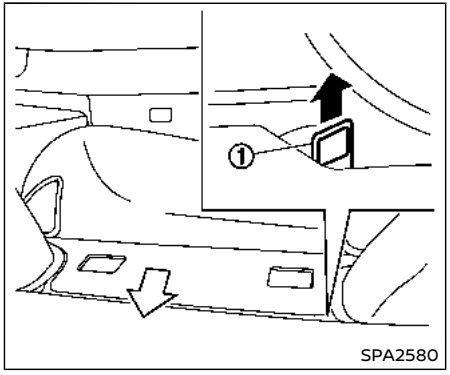


## SECONDARY REAR HATCH RELEASE

The secondary rear hatch release mechanism allows opening the rear hatch in the event of discharged battery or emergency.

The release handle is located under the cargo room carpet. To open the rear hatch from the passenger compartment, perform the following procedure.

1. Remove the cargo room carpet.
2. Find the rear hatch release handle ① as shown in the illustration.
3. Free the release handle that is fixed with velcro.
4. Firmly pull the release handle until the rear hatch releases.

**WARNING**

- **Do not drive with the trunk lid open. This could allow dangerous exhaust gases to be drawn into the vehicle. See "Exhaust gas (carbon monoxide)" (P.5-2) of this manual.**
- **Closely supervise children when they are around cars to prevent them from playing and becoming locked in the trunk where they could be seriously injured. Keep the car locked, with the trunk closed, when not in use, and prevent children's access to Intelligent Keys.**

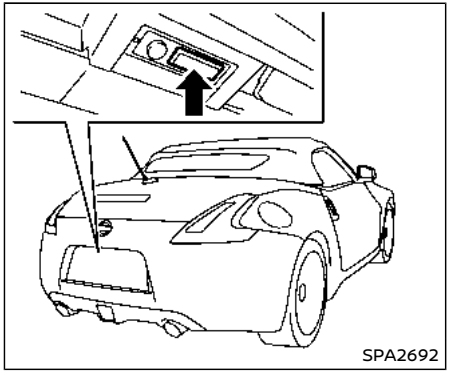


## TRUNK LID OPENER SWITCH

The trunk lid can be opened by pushing the trunk lid opener switch when the Intelligent Key is within the operating range of the trunk lock/unlock function regardless of the inside lock knob position. (See "Intelligent Key system" (P.3-7).)

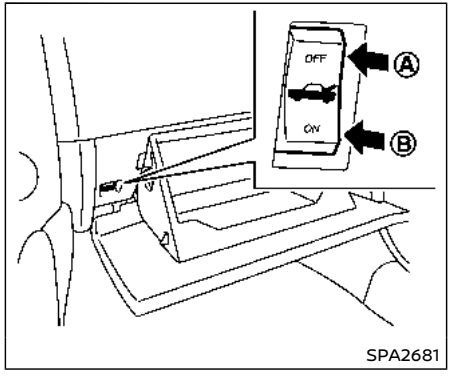


## TRUNK RELEASE POWER CANCEL SWITCH

When the switch located inside the glove box is in the OFF position Ⓐ, the power to the trunk lid will be canceled and the trunk lid cannot be opened by the trunk lid opener or trunk request switch.

When you have to leave the vehicle with a valet and want to keep your belongings safe in the glove box and the trunk, push this switch to OFF and lock the glove box with the mechanical key. Then leave the vehicle and the Intelligent Key with the valet and keep the mechanical key with you.

See "Keys" (P.3-3).

To connect the power to the trunk lid, push the switch to the ON Ⓑ position.

## INTERIOR TRUNK LID RELEASE

**WARNING**

**Closely supervise children when they are around cars to prevent them from playing and becoming locked in the trunk where they could be seriously injured. Keep the car locked, with the trunk lid securely latched, when not in use, and prevent children's access to Intelligent Keys.**

The interior trunk lid release mechanism allows opening of the trunk lid in the event that people become locked inside the trunk.

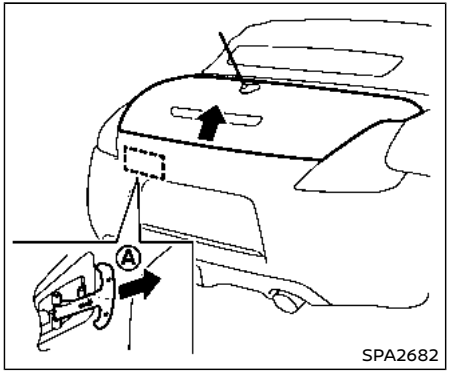


## Releasing inside the trunk

To open the trunk lid from the inside, pull the release handle Ⓐ until the lock releases and push up on the trunk lid. The release lever is made of a material that glows in the dark after a brief exposure to ambient light.

The handle Ⓐ is located inside the trunk compartment as illustrated.

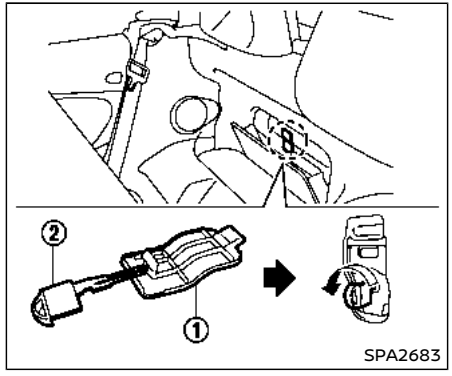


## SECONDARY TRUNK LID RELEASE

The secondary trunk lid release mechanism allows opening the trunk lid in the event of discharged battery or emergency.

1. Open the rear parcel box.
2. Remove the cap ① with a suitable tool ②.
3. Insert the key into the key cylinder and turn it counterclockwise. The trunk lid will open.

## SOFT TOP (Roadster models)

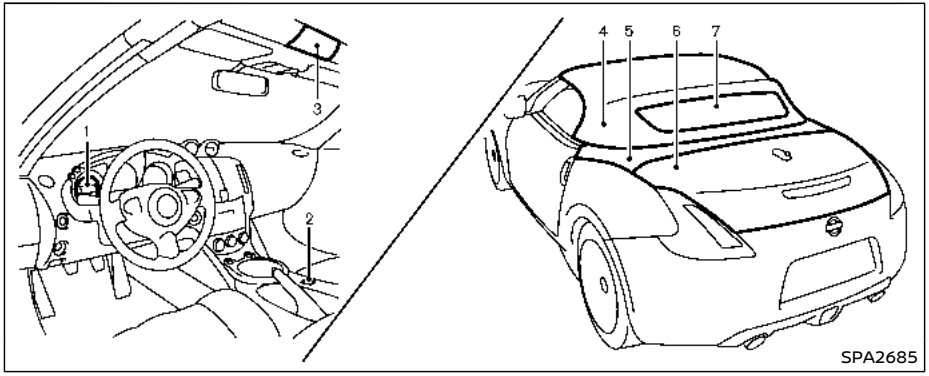


**Interior/exterior view**

1. Soft top indicator light (on the combination meter)
2. Soft top operating switch
3. Top lock hole
4. Soft top
5. Top storage lid
6. Trunk lid
7. Rear window

### BEFORE OPERATING THE TOP

The soft top of this vehicle is electrically operated. You can fully open or close the top only by pressing the operating switch located on the center console.

The soft top operating switch must be operated under all of the following conditions:

- When the trunk is closed.
- When the vehicle is stopped.
- When the engine is running.
- When the ignition switch is in the ON position.
- When the shift lever is in a position other than the R (Reverse) position.

**CAUTION**

**Always keep the engine running while operating the soft top. The top will also operate when the ignition switch is in the ON position, but run the engine to prevent a discharged battery.**

Be sure to follow the operating instructions, and all the warnings and cautions in this section. **Improper operation of the top could cause a system malfunction, damage, or deterioration of the top material and related parts.**

**WARNING**

- **Park the vehicle in a safe and level place and apply the parking brake.**
- **Make sure the area is clear of obstacles and there is enough clearance over the top (for example, in a garage or a covered area). More than approximately 6.6 ft (2 m) from the ground is required to open or close the top safely. Otherwise, the top may damage any objects above it while moving. The top operating system could also be damaged.**
- **Do not operate the top in a strong wind. It could be blown by the wind, striking someone or damage the top.**

- **Do not allow anyone to stand up or extend any portion of their body out of the opening while the vehicle is in motion or while the top is being operated.**
- **In an accident you could be thrown from the vehicle with an open top. Always use seat belts and proper child restraints.**

**CAUTION**

- **Do not operate the top when the temperature is below 32°F (0°C). This may result in damage to the top material or operating system.**
- **Remove water drops, snow, ice or sand from the top, and dry the surface of the top completely before opening it.**
- **Do not open the top when it is wet or damp. This may cause interior water damage, stains or mildew on the top material.**
- **Be sure to turn off the rear window defroster switch. Never turn it on while the top is being operated or fully opened. The heat may damage the top material.**

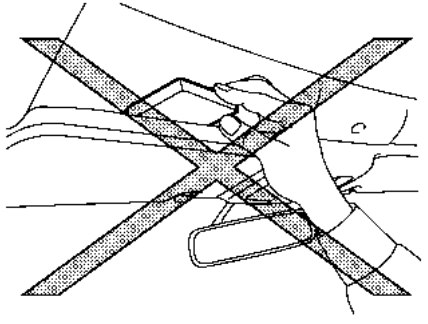

SPA2691

**CAUTION**

- **Do not place any objects between the top cloth and the structure. Doing so could interfere with top operation and cause damage to the top operating system or the objects.**
- **Do not place anything on the top and the storage lid. Even small items may interfere with the top operation and could cause damage to the top or the vehicle body.**

- **Do not place anything in the top storage area. The top will not fit there properly, and this could damage the top and/or the vehicle body.**
- **Do not sit or place excessive weight on the top and the storage lid, especially when the top is being operated. The top may be damaged.**
- **Do not drive the vehicle with the top partially opened. Always make sure the top is either fully opened or closed before driving.**
- **Secure items so that they cannot be blown from the vehicle while driving with the top open.**
- **Do not operate the top manually except for emergency cases. Manual operation may damage the top.**
- **Be sure to fully open or fully close the top. Do not release the switch half way through the roof opening or closing process. If the top is only partially opened, significant damage to the top could occur.**

Make sure the trunk lid is securely closed before operating the top.

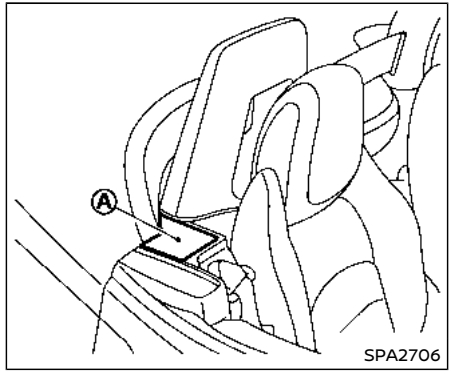


WHEN OPERATING THE TOP

**WARNING**

**Keep hands and other parts of the body away from moving parts such as the top, storage lid, side flap Ⓐ and power windows.**

**CAUTION**

**Keep all parts of the top linkage clear of obstructions, or the top latch may not be securely locked.**

**NOTE:**

- **In case of low battery or low temperature, the top may temporarily stop moving during the operation. This functions to protect the top control mechanism, and it is not a malfunction.**
- **If the top is opened and closed repeatedly in a short period of time or the top operation is stopped while opening or closing, the top operation may be automatically stopped to protect the system. Wait for approximately 5 minutes before operating the top again.**

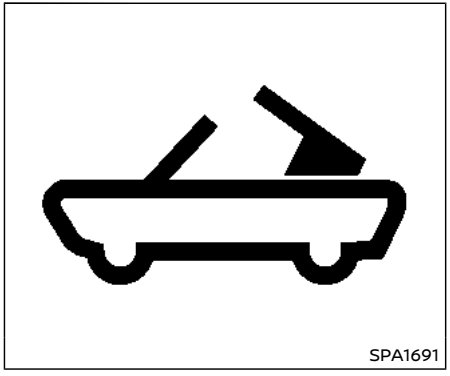


## Soft top indicator light

The soft top indicator light in the instrument panel shows the conditions of top operation. The light illuminates when the soft top is being operated or if it is stopped before reaching the fully opened or closed position. When the top is fully opened or closed, the light will turn off.

The light blinks while the soft top is not fully opened or closed under the following conditions:

- When the vehicle is driven.
- When the shift lever is in the R (Reverse) position.

Be sure to fully open or close the soft top when driving the vehicle.

When the soft top is operating, and any of the following conditions occur, the top will stop operating.

- When the shift lever is in the R (Reverse) position.
- When the vehicle moves at a speed of 3 MPH (5 km/h) or more.
- When the battery voltage is extremely low.
- When the temperature of the soft top system becomes extremely high.

Release the soft top operating switch, and push the switch again to move the top to the fully opened or closed position. The soft top indicator light will turn off when the top operation is completely finished.

If the soft top indicator light illuminates with the ignition switch ON (whether the top is operated or not, and when the top is engaged), it may indicate the top operating system is not functioning properly. Have your vehicle checked as soon as possible. It is recommended you visit a NISSAN dealer for this service.

## Automatic window lowering

When the soft top operating switch is pressed, the power windows will automatically be lowered completely. The windows do not rise automatically after the top operation is completed. Use the power window switches to raise them.

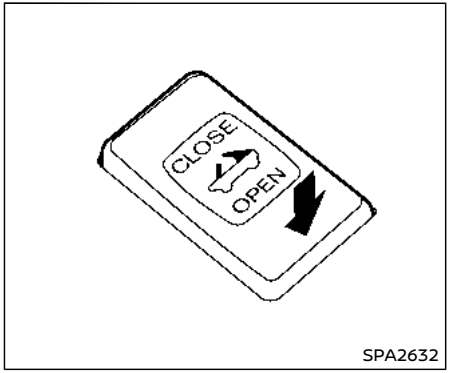

SPA2632

## OPENING THE TOP

1. Start the engine.
2. Push OPEN on the soft top operating switch and hold it until the top is fully opened.
   - The soft top indicator light will illuminate while the top is in motion. (In about 20 seconds, the opening movement will finish and the indicator light turns off.)
   - Windows will automatically be fully opened.
3. Release the switch when the top is fully opened. (The indicator light turns off.)

**NOTE:**

**If you release the switch and press it again while the top is being opened, the top will slightly move to the closing direction, then start moving to the opening direction again. The top is designed to move in this way. It is not a malfunction.**

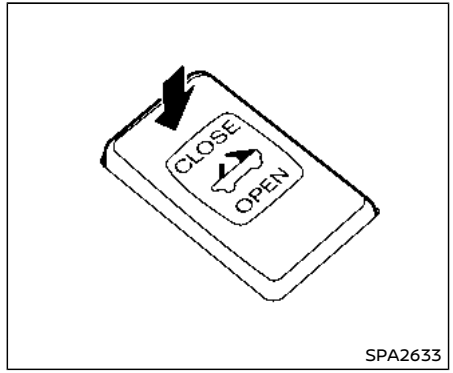

SPA2633

## CLOSING THE TOP

1. Start the engine.
2. Push CLOSE on the soft top operating switch and hold it until the top is fully closed.
   - The soft top indicator light will illuminate while the top is in motion. (In about 20 seconds, the closing movement will finish.)
   - Windows will automatically be fully opened.
3. Release the switch when the top is fully closed. (The indicator light will turn off.)

## OPENING THE TOP USING THE INTELLIGENT KEY

The soft top can be opened using the request switch.

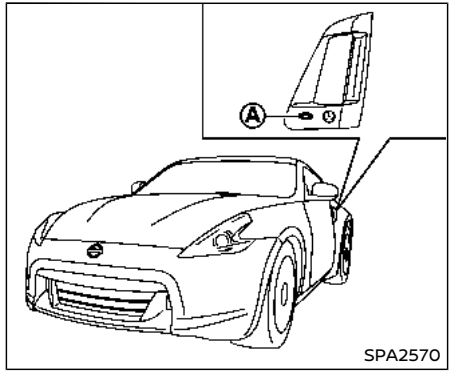


### Opening the soft top

Push the ignition switch to the OFF position and make sure to carry the Intelligent Key with you. Push the door handle request switch (driver's or passenger's) Ⓐ and hold it until the soft top is fully open.

## TROUBLESHOOTING GUIDE

If the soft top stops halfway during operation or does not operate normally, follow the procedures shown in the following table. If the procedures in the following table do not solve the symptom, have your vehicle inspected immediately. It is recommended to visit a NISSAN dealer for this service.

| Symptom | Beep | Possible cause | Possible solution |
|---|---|---|---|
| The OPEN side of the soft top operating switch is pushed, but the soft top does not operate. | Sounds twice | The OPEN side of the soft top operating switch is pushed while the soft top is fully open, or the CLOSE side of the soft top operating switch is pushed while the soft top is fully closed. | Push the CLOSE side of the soft top operating switch when the soft top is fully open. Push the OPEN side of the soft top operating switch when the soft top is fully closed. |
| | Sounds twice | The shift lever is in the R (Reverse) position. | Shift the shift lever to the P (Park) or N (Neutral) position (automatic transmission models only), or shift the shift lever to the N (Neutral) position (manual transmission models only), and then operate the soft top. |
| | Sounds twice | The trunk lid is opened. | Fully close the trunk lid. |
| | Does not sound | The battery voltage is low. | Start the engine again and operate the soft top. |
| | Does not sound | The operation stops to protect the system. | Wait for approximately 5 minutes. |
| The soft top stops halfway during operation. | Sounds twice | Objects are trapped in the moving structure of the soft top. | Check that an object is not trapped inside the rear parcel shelf, side flap and soft top. After the check, place the ignition switch in the OFF position, start the engine again and then operate the soft top. |
| | Sounds twice | The battery voltage is low. | Start the engine again and operate the soft top. |
| When the vehicle is being driven, the beep sounds. | Sounds continuously | The soft top is partially opened. | Immediately park the vehicle in a safe location and fully open or fully close the soft top. |

## IF THE TOP DOES NOT OPEN OR CLOSE ELECTRICALLY

If you cannot operate the soft top with the operating switch, first check whether all the following operating conditions are met.

- vehicle is stopped
- ignition switch is ON (Run the engine when operating the top.)
- the trunk is closed
- the shift lever is in a position other than the R (Reverse) position

If the top still does not move under the above conditions or has any system malfunction, it is recommended you visit a NISSAN dealer as soon as possible. When you must close the top by yourself, in the event of emergency or when an immediate dealer service is not available, close the top manually according to the procedures shown in this section.

When closing the soft top manually:

- Move the vehicle to a safe place, away from traffic.
- Two people should perform this procedure, as some of the top parts are extremely heavy.

The top cannot be opened manually.

**WARNING**

- **Do not drive with the top partially opened.**
- **If the top cannot be operated properly, have your vehicle checked as soon as possible. It is recommended you visit a NISSAN dealer for this service.**

**CAUTION**

**The storage lid is extremely heavy. The storage lid should be manually opened or closed by two people.**

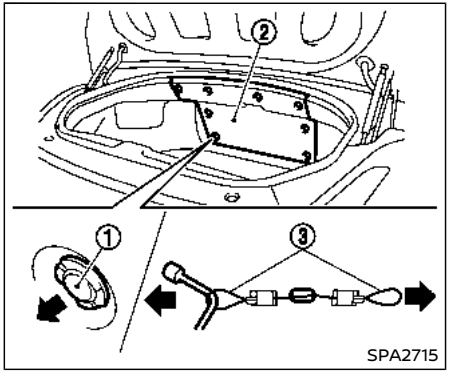


1. Open the trunk lid. In the event of a discharged battery, the secondary trunk release mechanism should be operated. (See "Secondary trunk lid release" (P.3-22).)
2. Open the top storage lid
   a. Remove the board ② inside of the trunk by removing the clips ①.
   b. Pull the lock release cables (right and left) ③ as illustrated, then close the trunk lid.

   **NOTE:**
   **Use a cloth or other tool to protect your hands when pulling on the lock release cables ③.**

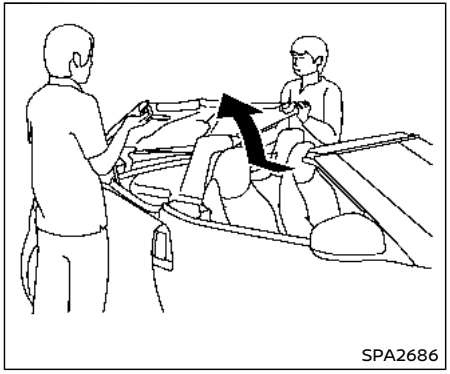
SPA2686

c. Pull up the storage lid from the left and right side of the vehicle by hand.

**CAUTION**

**Make sure to close the trunk lid before opening the storage lid. The storage lid may contact the trunk lid and damage it.**

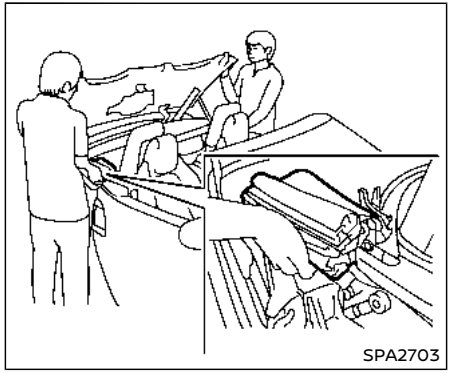
SPA2703

3. Close the soft top.
   a. Pull up the top simultaneously from the right and left side of the vehicle while holding the storage lid.

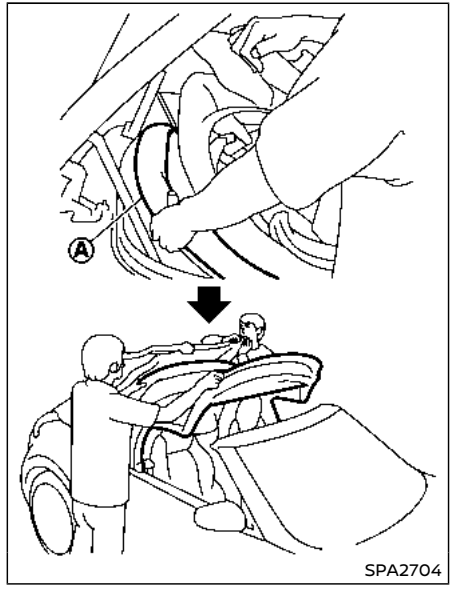

SPA2704

   b. When the rear top Ⓐ is pulled up from the storage area, one person must hold the storage lid and another person must pull up the soft top.
   c. Pull up the top using both hands, holding the rear top Ⓐ as illustrated.

**CAUTION**

**Make sure to hold the rear top Ⓐ to avoid the front and rear parts separating. Otherwise the top may be damaged.**

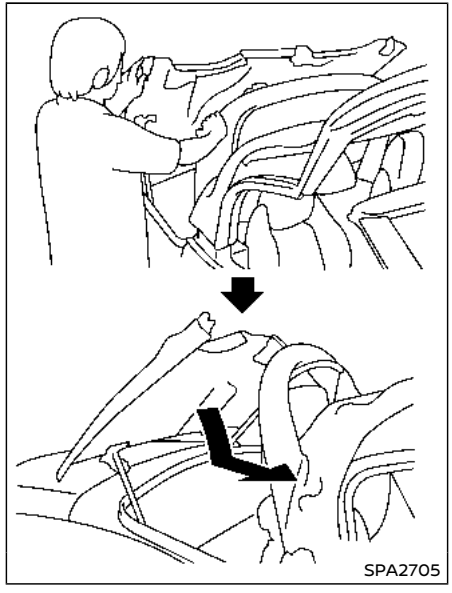


d. Pull down and slide the storage lid to close while holding the rear soft top from the right and left side of the vehicle.

**CAUTION**

**Make sure to close the storage lid completely. The storage lid may contact the soft top and damage it.**

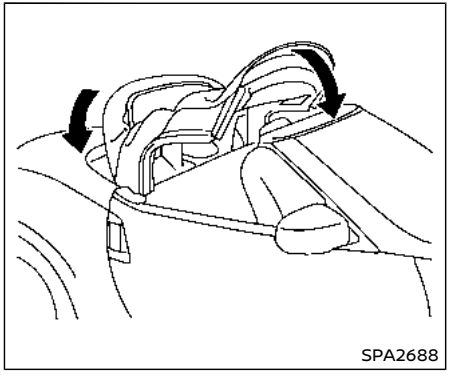
SPA2688

e. Close the front and rear parts of the soft top at the same time as illustrated.

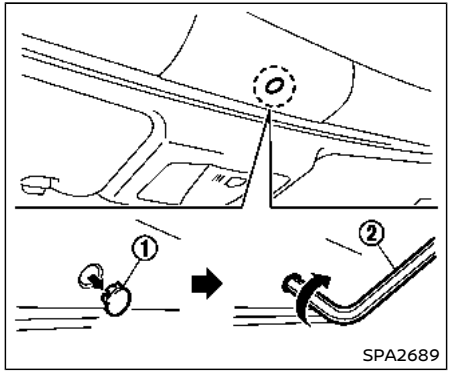

SPA2689

4. Lock the front part of the soft top.
   a. Remove the cap ① as illustrated.
   b. Insert a suitable tool ② (located in the trunk) into the hole and turn clockwise.

**CAUTION**

- **After closing the top manually, have the system checked and/or repaired as soon as possible. It is recommended you visit a NISSAN dealer for this service.**
- **Avoid leaving the vehicle outside for long periods or driving at high speeds. The rear of the top is not locked completely, and this may allow wind and rain to get into your vehicle.**

## CARE OF THE SOFT TOP AND THE VEHICLE BODY

To use your Roadster safely and comfortably, you need to observe all the warnings and cautions shown in the previous pages. Also, to maintain a good appearance of the soft top and the vehicle body, you need to care for them by cleaning and/or washing properly.

**CAUTION**

- **Do not use an automatic car wash or a high-pressure car wash to clean your vehicle. The top may be damaged and water may leak into the inside of the vehicle.**
- **Store the vehicle with the top closed if it is not to be used for long periods. Keeping the top stowed for long periods may cause wrinkles on the surface of the top.**

See “Cleaning exterior” (P.7-2) for detailed

instructions.

- A protective clear tape is applied to the top storage lid painted surface where the soft top contacts the surface. When the top is fully closed, the tape may transmit some light, visible from the inside of the vehicle. This does not affect the water and air tightness of the seal.
- The inner surface of the trunk and top storage lids may show a fibrous, or marbled pattern. This is the normal appearance of the material used in these parts.

## FRONT, SIDE AND REAR UNIQUE PARTS (NISMO models)

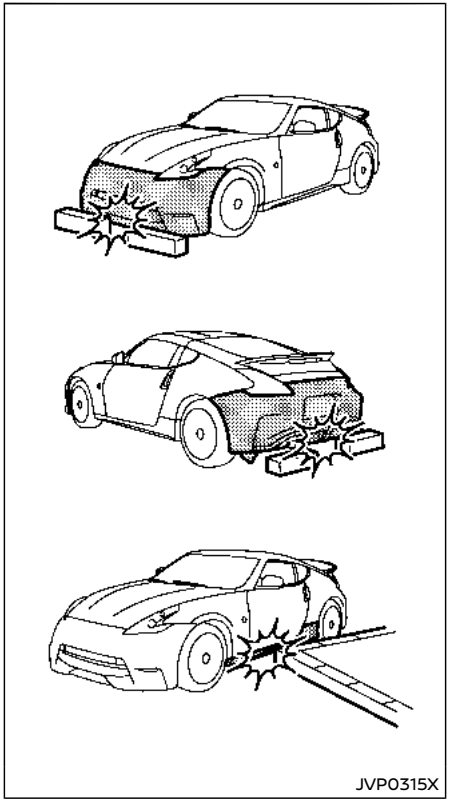


The NISMO models have the following unique parts on the front, side and rear of the vehicle.

- Front bumper with an aerodynamic splitter
- Side sill extensions
- Rear bumper with an aerodynamic diffuser
- Large-diameter exhaust pipes

These parts are close to the ground and may be damaged if they contact objects such as curbs, parking blocks, etc.

**CAUTION**

**Reduce vehicle speed to decrease the possibility of damaging these parts when:**

- **driving on bumpy or rutted roads**
- **entering or exiting parking garages and driveways**
- **driving over speed bumps**

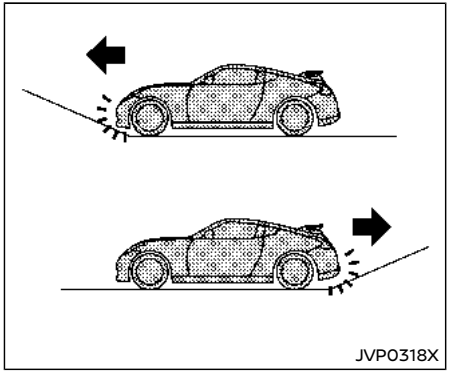


**CAUTION**

**The approach and departure angles are small. Reduce vehicle speed when the vehicle approaches or leaves a steep hill. Otherwise, the front bumper with an aerodynamic splitter, rear bumper with an aerodynamic diffuser and exhaust pipes may contact the road surface and be damaged.**

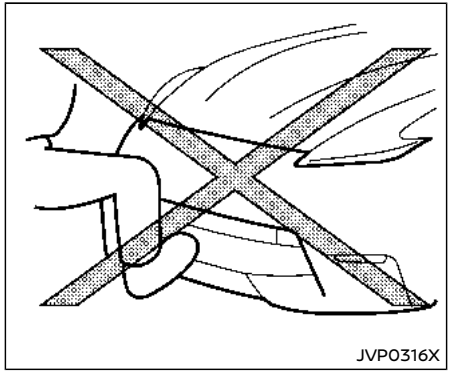


**CAUTION**

**Do not step on the front bumper with an aerodynamic splitter. Doing so could damage it.**

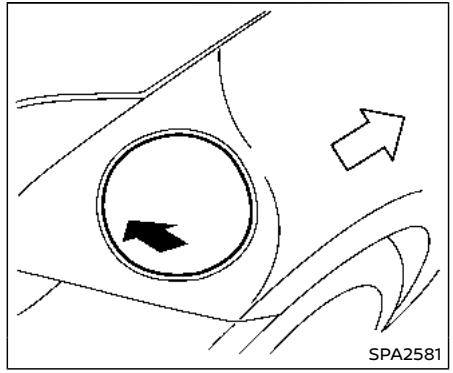


## OPENING THE FUEL-FILLER DOOR

To open the fuel-filler door, unlock the fuel-filler door by using one of the following operations, then push the left side of the door.

- Push the door handle request switch with the Intelligent Key carried with you.
- Push the UNLOCK button on the Intelligent Key.
- Insert the mechanical key into the door lock cylinder and turn it to the rear of the vehicle.
- Push the power door lock switch to the UNLOCK position.

To lock, close the fuel-filler door securely and lock all doors by operating the door handle request switch, the LOCK button on the Intelligent Key, the mechanical key or the power door lock switch.

## FUEL-FILLER CAP

**WARNING**

- **Gasoline is extremely flammable and highly explosive under certain conditions. You could be burned or seriously injured if it is misused or mishandled. Always stop engine and do not smoke or allow open flames or sparks near the vehicle when refueling.**
- **Do not attempt to top off the fuel tank after the fuel pump nozzle shuts off automatically. Continued refueling may cause fuel overflow, resulting in fuel spray and possibly a fire.**
- **Use only an original equipment type fuel-filler cap as a replacement. It has a built-in safety valve needed for proper operation of the fuel system and emission control system. An incorrect cap can result in a serious malfunction and possible injury. It could also cause the malfunction indicator light to come on.**
- **Never pour fuel into the throttle body to attempt to start your vehicle.**
- **Do not fill a portable fuel container in the vehicle or trailer. Static electricity can cause an explosion of flammable liquid, vapor or gas in any vehicle or trailer. To reduce the risk of serious injury or death when filling portable fuel containers:**
  - **Always place the container on the ground when filling.**
  - **Do not use electronic devices when filling.**
  - **Keep the pump nozzle in contact with the container while you are filling it.**
  - **Use only approved portable fuel containers for flammable liquid.**

**CAUTION**

- **If fuel is spilled on the vehicle body, flush it away with water to avoid paint damage.**
- **Insert the cap straight into the fuel-filler tube, then tighten until the fuel-filler cap clicks. Failure to tighten the fuel-filler cap properly may cause the SERVICE ENGINE SOON malfunction indicator light (MIL) to illuminate. If the SERVICE ENGINE SOON light illuminates because the fuel-filler cap is loose or missing, tighten or install the cap and continue to drive the vehicle. The SERVICE ENGINE SOON light should turn off after a few driving trips. If the SERVICE ENGINE SOON light does not turn off after a few driving trips, have the vehicle inspected. It is recommended you visit a NISSAN dealer for this service.**
- **The LOOSE FUEL CAP warning will appear if the fuel-filler cap is not properly tightened. It may take a few driving trips for the message to be displayed. Failure to tighten the fuel-filler cap properly after the LOOSE FUEL CAP warning appears may cause the SERVICE ENGINE SOON Malfunction Indicator Light (MIL) to illuminate.**

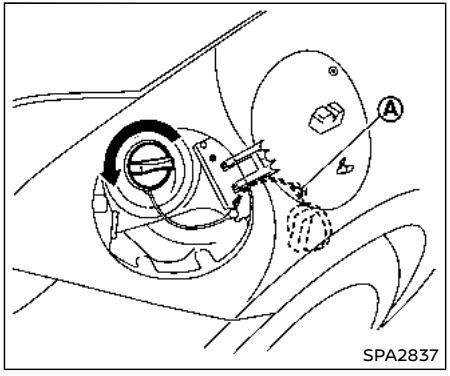


To remove the fuel-filler cap:

1. Turn the fuel-filler cap counterclockwise to remove.
2. Put the fuel-filler cap on the cap holder on the hook Ⓐ while refueling.

To install the fuel-filler cap:

1. Insert the fuel-filler cap straight into the fuel-filler tube.
2. Turn the fuel-filler cap clockwise until a single click is heard.

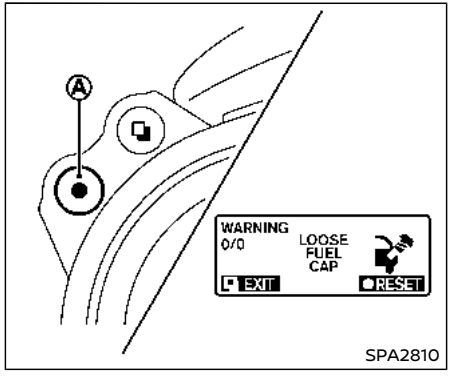


## LOOSE FUEL CAP warning

The LOOSE FUEL CAP warning appears on the vehicle information display when the fuel-filler cap is not tightened correctly after the vehicle has been refueled. It may take a few driving trips for the message to be displayed.

To turn off the warning, perform the following steps:

1. Remove and install the fuel-filler cap as soon as possible. (See "Fuel-filler cap" (P.3-36).)
2. Tighten the fuel-filler cap until it clicks.
3. Push the ● switch Ⓐ for about 1 second to turn off the LOOSE FUEL CAP warning after tightening the fuel cap.

## WARNING

- **Do not adjust the steering wheel while driving. You could lose control of your vehicle and cause an accident.**
- **Do not adjust the steering wheel any closer to you than is necessary for proper steering operation and comfort. The driver's air bag inflates with great force. If you are unrestrained, leaning forward, sitting sideways or out of position in any way, you are at greater risk of injury or death in a crash. You may also receive serious or fatal injuries from the air bag if you are up against it when it inflates. Always sit back against the seatback and as far away as practical from the steering wheel. Always use the seat belts.**

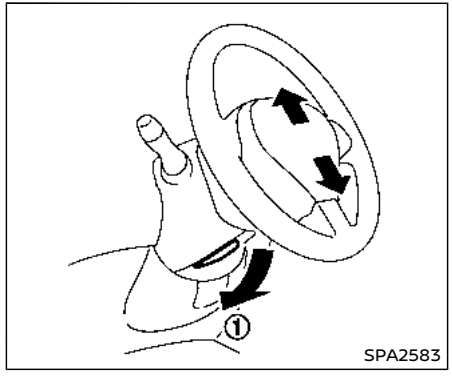

SPA2583

## MANUAL OPERATION

### Tilt operation

Push the lock lever ① down and adjust the steering wheel up or down to the desired position.

Pull the lock lever up securely to lock the steering wheel in place.



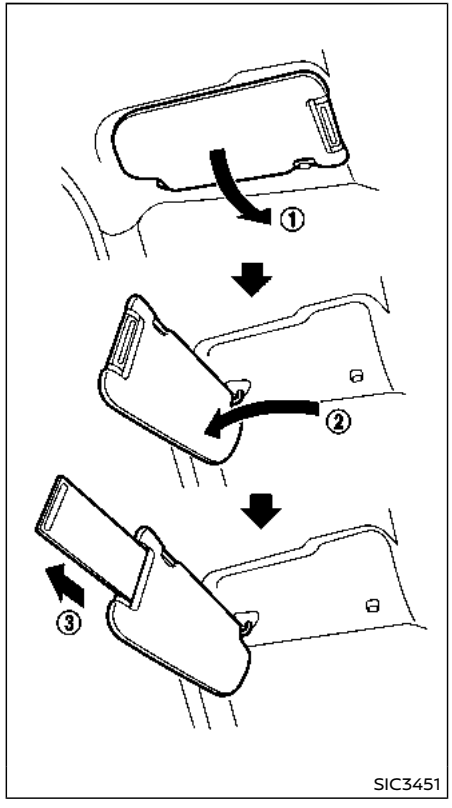

SIC3451

**CAUTION**

- **Do not store the main sun visor before storing the extension sun visor.**
- **Do not pull the extension sun visor forcedly downwards.**

1. To block out glare from the front, swing down the main sun visor ①.
2. To block glare from the side, remove the main sun visor from the center mount and swing it to the side ②.
3. Draw out the extension sun visor ③ (if so equipped) from the main sun visor to block further glare.

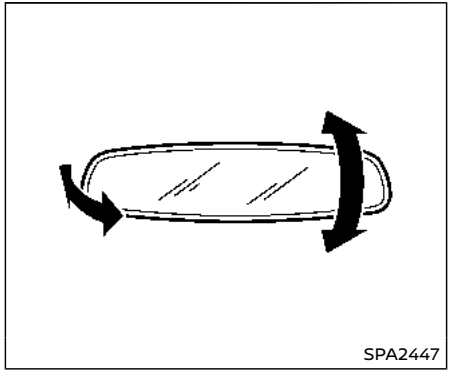
SPA2447

## INSIDE MIRROR

Adjust the height and the angle of the inside mirror to the desired position.

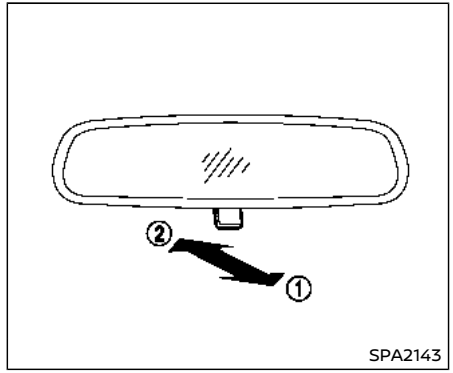

SPA2143

### Manual anti-glare type

The night position ① will reduce glare from the headlights of vehicles behind you at night.

Use the day position ② when driving in daylight hours.

**WARNING**

**Use the night position only when necessary, because it reduces rear view clarity.**

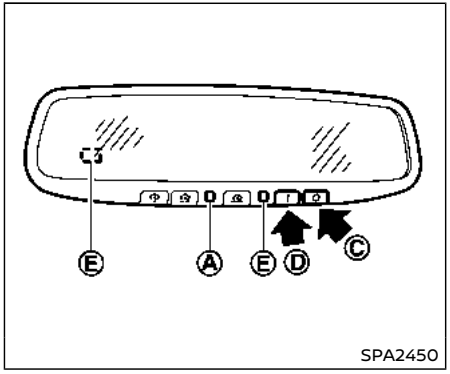


## Automatic anti-glare type

The inside mirror is designed so that it automatically changes reflection according to the intensity of the headlights of the following vehicle.

The anti-glare system will be automatically turned on when the ignition switch is pushed to the ON position.

When the anti-glare system is turned on, the indicator light Ⓐ will illuminate and excessive glare from the headlights of the vehicle behind you will be reduced.

Push the "○" switch Ⓒ to make the inside rearview mirror operate normally. The indicator light will turn off. Push the "I" switch Ⓓ to turn the system on.

**Do not allow any object to cover the sensors Ⓔ or apply glass cleaner on them. Doing so will reduce the sensitivity of the sensor, resulting in improper operation.**

For the HomeLink® Universal Transceiver operation, see "HomeLink® Universal Transceiver" (P.2-52).

## OUTSIDE MIRRORS

**WARNING**

**Objects viewed in the outside mirror on the passenger side are closer than they appear. Be careful when moving to the right. Using only this mirror could cause an accident. Use the inside mirror or glance over your shoulder to properly judge distances to other objects.**

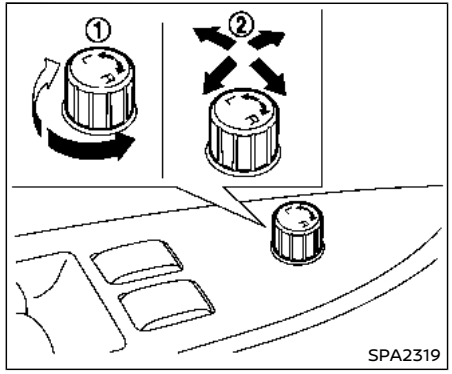


## Adjusting outside mirrors

The outside mirror control switch is located on the armrest.

The outside mirror will operate only when the ignition switch is in the ACC or ON position.

Turn the switch right or left to select the right or left side mirror ①, then adjust using the control switch ②.

## Defrosting outside mirrors (if so equipped)

The outside mirrors will be heated when the rear window defroster switch is operated.

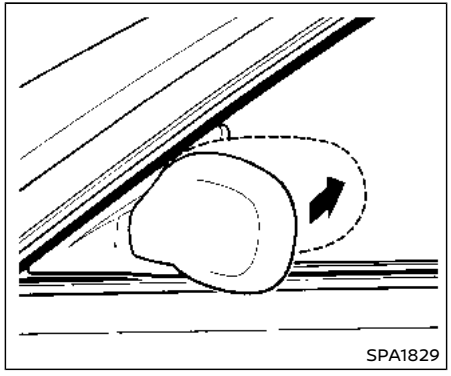


## Foldable outside mirrors

Fold the outside mirror by pushing it toward the rear of the vehicle.

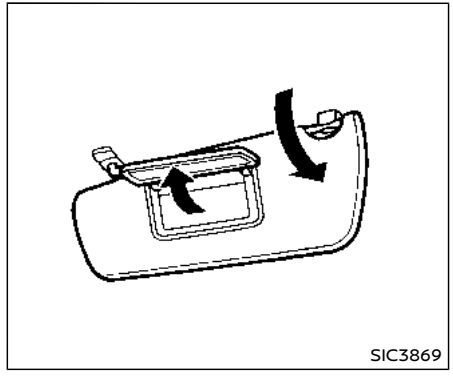


## VANITY MIRROR

To use the front vanity mirror, pull down the sun visor and pull up the cover.

**MEMO**

# 4 Center display, heater, air conditioner, audio, phone and voice recognition systems


Safety note ..... 4-3
Center multi-function control panel (models with navigation system) ..... 4-4
How to use multi-function controller ..... 4-4
How to use touch screen ..... 4-5
Menu options ..... 4-7
How to select menus on the screen ..... 4-7
Vehicle information and settings (models with navigation system) ..... 4-8
How to use STATUS button ..... 4-8
How to use brightness control and display ON/OFF button ..... 4-8
How to use INFO button ..... 4-8
How to use SETTING button ..... 4-11
RearView Monitor (models with navigation system) ..... 4-17
RearView Monitor system operation ..... 4-18
How to read displayed lines ..... 4-18
How to park with predictive course lines ..... 4-19
Adjusting the screen ..... 4-22
Predictive course line settings ..... 4-22
RearView Monitor system limitations ..... 4-22
System maintenance ..... 4-23
Ventilators ..... 4-24
Center ventilators ..... 4-24
Side ventilators ..... 4-24
Heater and air conditioner ..... 4-25
Automatic air conditioner (Type A) (if so equipped) ..... 4-26
Automatic air conditioner (Type B) (if so equipped) ..... 4-28
Operating tips ..... 4-30
In-cabin microfilter ..... 4-30
Servicing air conditioner ..... 4-30
Audio system ..... 4-30
Audio operation precautions ..... 4-30
FM-AM radio with Compact Disc (CD) player ..... 4-43
FM-AM-SAT radio with Compact Disc (CD) player ..... 4-52
DVD (Digital Versatile Disc) player operation (models with navigation system) ..... 4-55
USB (Universal Serial Bus) connection port (models with navigation system) ..... 4-59
Bluetooth® streaming audio (models with navigation system) ..... 4-63

iPod® player operation (models with navigation system) ..... 4-68
Auxiliary input jacks (models with navigation system) ..... 4-70
CD/DVD/USB memory care and cleaning ..... 4-72
Steering-wheel-mounted controls for audio ..... 4-73
Antenna ..... 4-74
Car phone or CB radio ..... 4-75
Bluetooth® hands-free phone system (models with navigation system) ..... 4-76
Regulatory information ..... 4-77
Voice commands ..... 4-77
Control buttons ..... 4-78
Connecting procedure ..... 4-78
Phone selection ..... 4-79
Quick Dial ..... 4-79
Making a call ..... 4-82
Receiving a call ..... 4-82
During a call ..... 4-83
Phone setting ..... 4-84
Troubleshooting guide ..... 4-85
Bluetooth® hands-free phone system (models without navigation system) ..... 4-86
Regulatory information ..... 4-87
Using the system ..... 4-88
Control buttons ..... 4-90
Getting started ..... 4-90
List of voice commands ..... 4-92
Speaker Adaptation (SA) mode ..... 4-96
Troubleshooting guide ..... 4-98
NISSAN Voice Recognition System (models with navigation system) ..... 4-99
NISSAN voice recognition Standard Mode ..... 4-99
Using the system ..... 4-102
NISSAN voice recognition Alternate Command Mode ..... 4-110
Using the system ..... 4-119
Troubleshooting guide ..... 4-124

## SAFETY NOTE

**WARNING**

- **Do not disassemble or modify this system. If you do, it may result in accidents, fire, or electric shock.**
- **Do not use this system if you notice any abnormality, such as a frozen screen or lack of sound. Continued use of the system may result in accident, fire or electric shock.**
- **In case you notice any foreign object in the system hardware, spill liquid on it, or notice smoke or smell coming from it, stop using the system immediately. It is recommended you visit a NISSAN dealer for servicing. Ignoring such conditions may lead to accidents, fire, or electric shock.**
- **Park the vehicle in a safe location and apply the parking brake to view the images on the front center display screen.**

**Do not attempt to operate the system in extreme temperature conditions [below −4°F (−20°C) and above 158°F (70°C)]. Operating this system under these conditions may result in system malfunctions.**

## CENTER MULTI-FUNCTION CONTROL PANEL (models with navigation system)

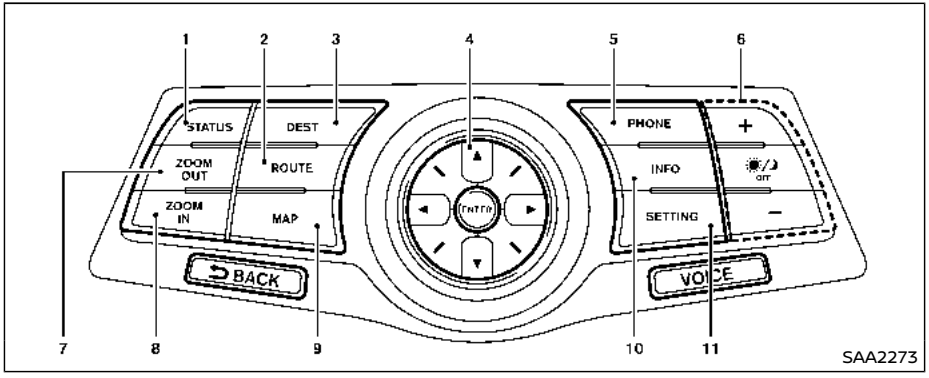


1. "STATUS" status display button (P.4-8)
2, 3, 7, 8, 9.
   For navigation system control buttons (Refer to the separate Navigation System Owner's Manual.)
4. Multi-function controller (P.4-4)
5. "PHONE" Bluetooth® Hands-Free Phone System button (P.4-76)
6. "☀/ OFF" brightness control and display ON/OFF button (P.4-8)
10. "INFO" vehicle and navigation information button (P.4-8)
11. "SETTING" button (P.4-11)

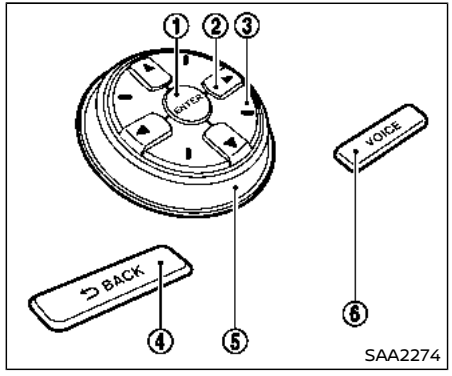


### HOW TO USE MULTI-FUNCTION CONTROLLER

Choose an item on the display using the main directional buttons ② (or additional directional buttons ③ with navigation system) or center dial ⑤, and push the ENTER button ① for operation.

Push the BACK button ④ to return the display to the previous screen or delete characters. Pushing BACK may or may not save the settings depending on the menu.

For the VOICE button ⑥ functions, refer to the separate Navigation System Owner's Manual.

## HOW TO USE TOUCH SCREEN

**CAUTION**

- **The glass screen on the liquid crystal display may break if it is hit with a hard or sharp object. If the glass screen breaks, do not touch it. Doing so could result in an injury.**
- **To clean the display, use a soft, dry cloth. If additional cleaning is necessary, use a small amount of neutral detergent with a soft cloth. Never use a rough cloth, alcohol, benzine, thinner or any kind of solvent or paper towel with a chemical cleaning agent. They will scratch or deteriorate the panel.**
- **Do not splash any liquid such as water or car fragrance on the display. Contact with liquid will cause the system to malfunction.**

To ensure safe driving, some functions cannot be operated while driving.

The on-screen functions that are not available while driving will be "grayed out" or muted.

Park the vehicle in a safe location and then operate the navigation system.

**WARNING**

- **ALWAYS give your full attention to driving.**
- **Avoid using vehicle features that could distract you. If distracted, you could lose control of your vehicle and cause an accident.**

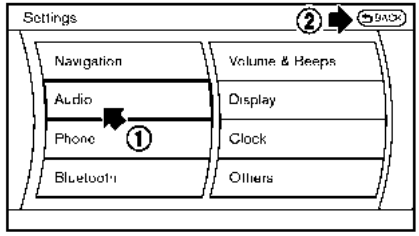


SAA2473

### Touch screen operation

With this system, the same operations as those for the multi-function controller are possible using the touch screen operation.

**Selecting the item:**

Touch an item to select it. To select the "Audio" settings, touch the "Audio" area ① on the screen.

Touch the BACK ② button to return to the previous screen.

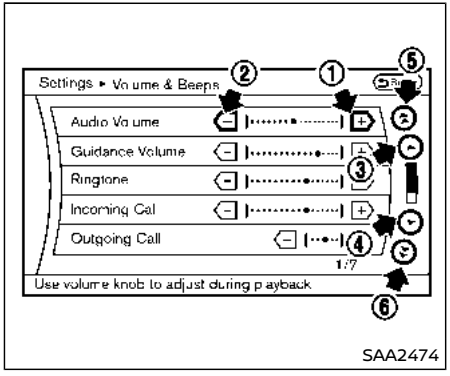


**Adjusting an item:**

Touch the **+** ① or **–** ② button to adjust the settings.

Touch the ⊛ ③ or ⊛ ④ button to move to the previous or next item.

Touch the ⊛ ⑤ or ⊛ ⑥ button to move to the previous or next page.

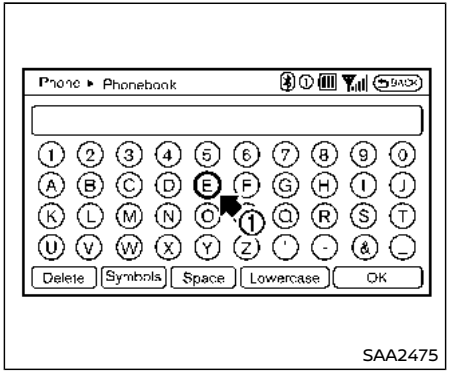


**Inputting characters:**

Touch the letter or number ①.

There are some options available when inputting characters.

- **Uppercase:**
  Shows uppercase characters.
- **Lowercase:**
  Shows lowercase characters.
- **Symbols:**
  Shows symbols such as the question mark (?).
- **Space:**
  Inserts a space.
- **Delete:**
  Deletes the last character that has been input with one touch. Push and hold the button to delete all of the characters.
- **OK:**
  Completes character inputs.

## Touch screen maintenance

If you clean the display screen, use a dry, soft cloth. If additional cleaning is necessary, use a small amount of neutral detergent with a soft cloth. Never spray the screen with water or detergent. Dampen the cloth first, and then wipe the screen.

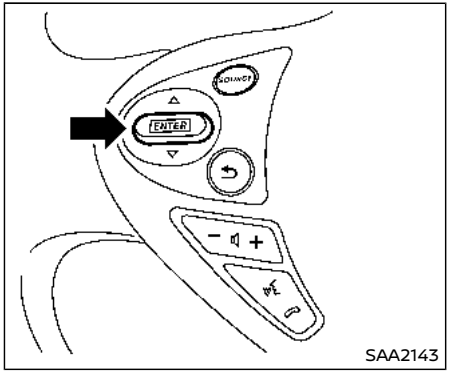


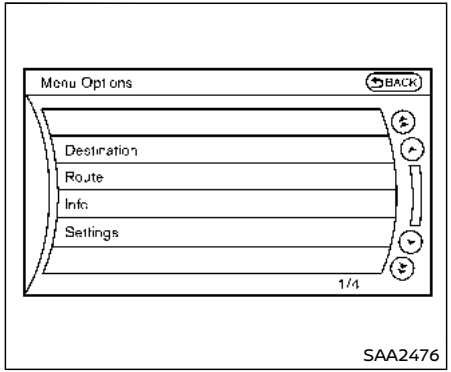


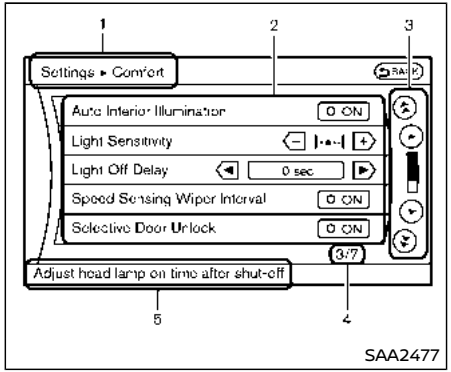


## MENU OPTIONS

The start menu can be displayed using the menu control switch on the steering-wheel-mounted controls.

1. While the MAP or STATUS screen is displayed, push and hold the menu control switch until the "Menu Options" screen appears.
2. Highlight the preferred item by tilting the menu control switch up or down, and then push the menu control switch to select it.

### Available items

**Destination/Route:**

These items are for the navigation system. See the separate Navigation System Owner's Manual for details.

**Info:**

Displays the information screen. It is the same screen that appears when you push the INFO button.

**Settings:**

Displays the settings screen. It is the same screen that appears when you push the SETTING button.

## HOW TO SELECT MENUS ON THE SCREEN

Vehicle functions are viewed on the display screen in menus. To select each key item, highlight the preferred item using the multi-function controller and push the ENTER button.

Whenever a menu selection is made or menu item is highlighted, different areas on the screen provide you with important information. See the following for details.

1. Header:

   Shows the path used to get to the current screen. (i.e. push SETTING button > choose "Comfort" menu item.)

2. Menu Selections:

   Shows the options to choose within that menu screen.
3. UP/DOWN Movement indicator:

   Shows that the multi-function controller may be used to move UP/DOWN on the screen and select more options.
4. Menu Items Counter:

   Shows the total number of items listed across all pages for the current menu (i.e. 3/7).
5. Footer/Information Line:

   Provides more information (if available) about the menu selection currently highlighted. (i.e. Adjust head lamp on time after shut-off.)

## HOW TO USE STATUS BUTTON

You can check information related to the audio, climate control system, fuel consumption and navigation system by pressing the STATUS button repeatedly.

## HOW TO USE BRIGHTNESS CONTROL AND DISPLAY ON/OFF BUTTON

Push the "☀/ OFF" button to switch the display brightness to the daytime mode or the nighttime mode, and to adjust the display brightness using the multi-function controller while the indicator is displayed at the bottom of the screen.

The display brightness can also be adjusted using the brightness UP button **(+)** or brightness DOWN button **(–)**.

Push and hold the "☀/ OFF" button for more than 2 seconds to turn the display off. Push the button again to turn the display on.

## HOW TO USE INFO BUTTON

The display screen shows vehicle and navigation information for your convenience.

The information shown on the screen should be a guide to determine the condition of the vehicle. See the following for details.

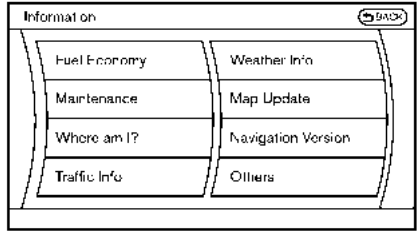

SAA2478

1. Push the INFO button on the control panel.
2. Select an item from the INFO menu.
3. After viewing or adjusting the information on the following screens, push the BACK button to return to the INFO menu.

See the separate Navigation System Owner's Manual for the following items:

- Where am I?
- Traffic Info
- Weather Info
- Map Update
- Navigation Version

*When the ignition switch is in the ON

position, the “Navigation Version” key is displayed after selecting the “Others” key.

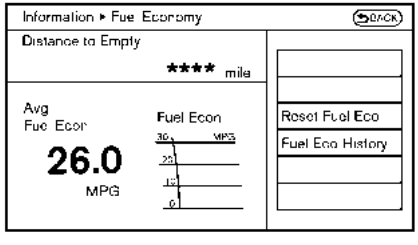


SAA2479

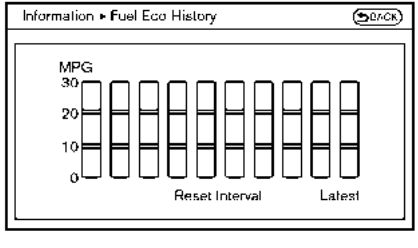


SAA2480

## Fuel Economy information

The approximate distance to empty, average fuel economy and current fuel economy will be displayed for reference.

To reset the average fuel economy (Avg Fuel Econ), select the “Reset Fuel Eco” key.

If the “Fuel Eco History” key is selected, the average fuel consumption history will be displayed in graph form along with the average for the previous Reset-to-Reset period.

The unit can be converted between “US” and “Metric”. (See “How to use SETTING button” (P.4-11).)

The fuel economy information may differ from the information displayed on the vehicle information display. This is due to the timing difference in updating the information and does not indicate a malfunction.

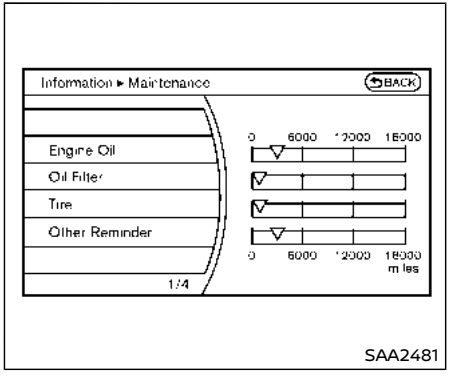


SAA2481

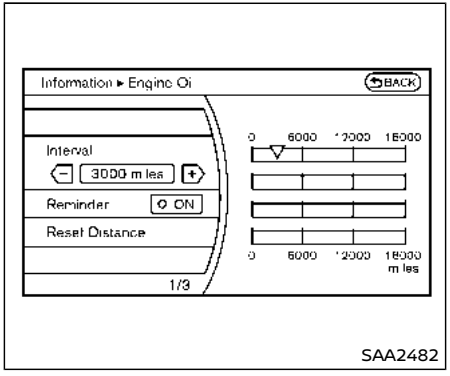


SAA2482

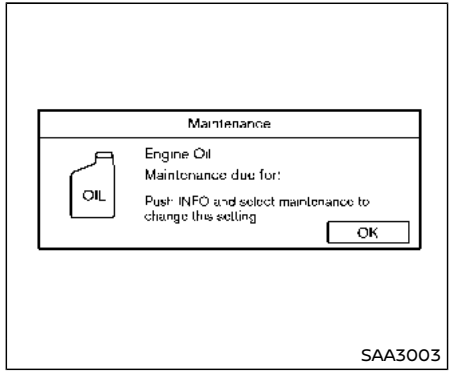


SAA3003

**Example**

## Maintenance information

The maintenance intervals can be displayed for the engine oil, oil filter, tire and other reminders.

To set a maintenance interval, select a preferred item from the list.

You can also set to display a message to remind you that the maintenance needs to be performed.

The following example shows how to set the engine oil maintenance information. Use the same steps to set the other maintenance information.

1. Set the interval (mileage) of the maintenance schedule. To determine the recommended maintenance interval, refer to the "9. Maintenance and schedules" section.
2. To display the reminder automatically when the desired distance is reached, select the "Reminder" key.
3. Reset the driving distance to the new maintenance schedule.
4. To return to the previous screen, push the BACK button.

The unit can be converted between "US" and "Metric". (See "How to use SETTING button" (P.4-11).)

The Reminder will be automatically displayed when the specified distance has been driven and every time the ignition switch is pushed to the ACC or ON position. The reminder will not appear while driving.

Select the "OK" key to hide the reminder for the rest of the current drive.

To stop the reminder from appearing, perform one of the following actions:

- Select the "Reset Distance".
- Deactivate the "Reminder".
- Increase the "Interval" distance to be more than the current distance being tracked.

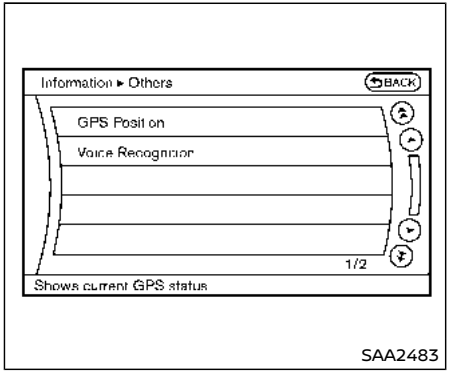


## Others information

The Others information display will appear when pushing the INFO button and selecting the "Others" key.

**GPS Position:**

For the details of this item, see the separate Navigation System Owner's Manual.

**Voice Recognition:**

For the details of this item, see "NISSAN Voice Recognition System (models with navigation system)" (P.4-99).

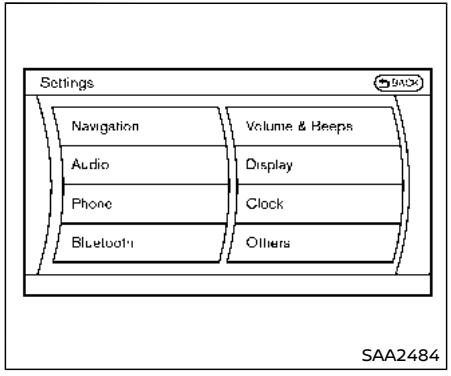


## HOW TO USE SETTING BUTTON

The display as illustrated will appear when the SETTING button is pushed.

For navigation settings, refer to the separate Navigation System Owner's Manual.

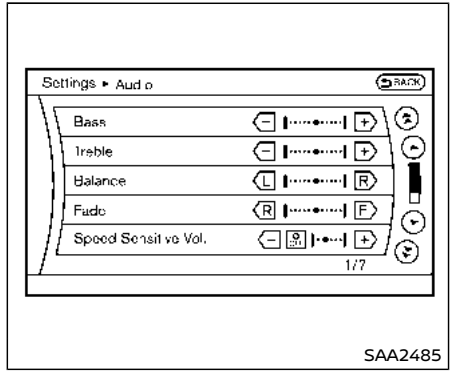


**Example**

## Audio settings

The display as illustrated will appear when pushing the SETTING button and selecting the "Audio" key.

**Bass/Treble/Balance/Fade:**

To adjust the speaker tone quality and sound balance, select the "Bass", "Treble", "Balance" or "Fade" key and adjust it with the multi-function controller.

These items can also be adjusted by pushing and turning the AUDIO knob.

**Speed Sensitive Vol.:**

The audio system's volume is increased with the vehicle speed. Select the "Speed

Sensitive Vol." and adjust the effect level with the multi-function controller. The Speed Sensitive Volume function is turned off when the level is set to "OFF". Increasing the value will cause the volume to increase faster with vehicle speed.

**DivX® Registration Code:**

The registration code for a device that is used to download DivX® files will be displayed on the screen. If a disc is loaded or a USB memory is connected to the audio system, this function will not be activated.

**Display Album Cover Art:**

When this item is turned to ON, the album cover image is displayed when playing iPod® or MP3 music files through a CD, DVD or USB memory. When the image is not properly embedded in the file or device, the image will not be displayed.

## Phone settings

For details of the "Phone" settings, see "Bluetooth® hands-free phone system (models with navigation system)" (P.4-76).

## Bluetooth® settings

For details of the "Bluetooth" settings, see "Bluetooth® hands-free phone system (models with navigation system)" (P.4-76) or "Bluetooth® streaming audio (models with navigation system)" (P.4-63).

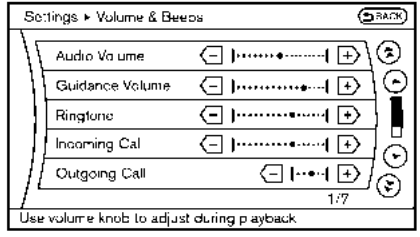


SAA2554

**Example**

## Volume and Beeps settings

The display as illustrated will appear when pushing the SETTING button, selecting the "Volume & Beeps" key.

**Audio Volume:**

To increase or decrease the audio volume, select the "Audio Volume" and adjust it with the multi-function controller. You can also adjust the audio volume by turning the VOLUME control knob.

**Guidance Volume:**

To adjust the guidance voice volume, select the "Guidance Volume" and adjust it with the multi-function controller.

**Ringtone/Incoming Call/Outgoing Call:**

For the details of these items, see "Bluetooth® hands-free phone system (models with navigation system)" (P.4-76).

**Switch Beeps:**

When this item is turned to ON, you will hear a beep sound when you use a button.

**Guidance Voice:**

When this item is turned to ON, you will hear voice guidance in the navigation operation or in other operations.

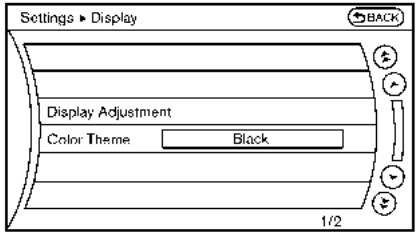


SAA2486

## Display settings

The display as illustrated will appear when pushing the SETTING button and selecting the "Display" key.

**Display Adjustment:**

To adjust the display settings, select the "Display Adjustment" key. The following settings are available.

- Display

To turn off the screen, push the ENTER button and turn the "Display" indicator off. The other method is to push and hold the "☀/ OFF" button for more than 2 seconds.

When any mode button is pushed with the screen off, the screen turns on for further operation. The screen will turn off automatically 5 seconds after the operation is finished.

To turn on the screen, set this item to the ON position, or push and hold the "☀/ OFF" button.

- Brightness/Contrast/Background Color

To adjust the brightness and contrast of the screen, select the "Brightness" or "Contrast" key.

Then, you can adjust the brightness and contrast using the multi-function controller.

For information on the "Background Color" key, refer to the separate Navigation System Owner's Manual.

For Roadster models:

Depending on the driver's seat position, the display could be hard to read. Adjust the brightness and contrast of the display on the setting screen.

**Color Theme:**

Choose the theme color of the menu screen from "Black", "Blue" or "Red".

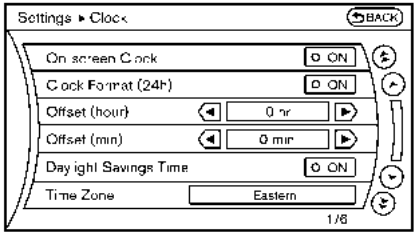


SAA2487

## Clock settings

The display as illustrated will appear when pushing the SETTING button and selecting the “Clock” key.

The clock settings display cannot be operated while driving. Stop the vehicle in a safe place and apply the parking brake before setting the clock.

**On-screen Clock:**

When this item is turned to ON, a clock is always displayed in the upper right corner of the screen.

This clock will indicate the time almost exactly because it is always adjusted by the GPS system.

**Clock Format (24h):**

When this item is turned to ON, the 24-hour clock is displayed. When this item is not turned to ON, the 12-hour clock is displayed.

**Offset (hour)/(min):**

Adjust the time by increasing or decreasing per hour or per minute.

**Daylight Saving Time:**

Turn this item to ON for daylight saving time application.

**Time Zone:**

Choose the time zone from the following

- Pacific
- Mountain
- Central
- Eastern
- Atlantic
- Newfoundland
- Hawaii
- Alaska

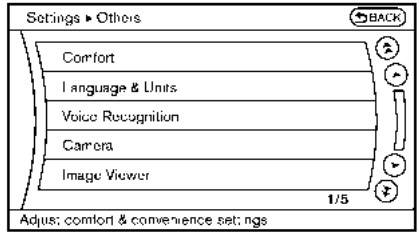


JVH0308M

## Others settings

The Others settings display will appear when pushing the SETTING button and selecting the “Others” key.

The following items are available:

- Comfort
- Language & Units
- Voice Recognition
- Camera
- Image Viewer

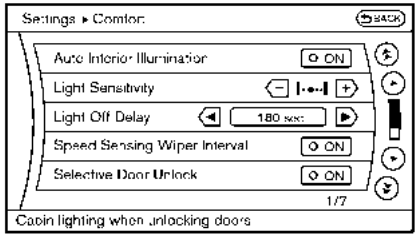


SAA2488

**Example**

## Comfort settings

The display as illustrated will appear when pushing the SETTING button and selecting the "Others" key, and then selecting the "Comfort" key. This key does not appear on the display until the ignition switch is pushed to the ON position.

**Auto Interior Illumination:**

When this item is turned to ON, the interior lights will illuminate if any door is unlocked.

**Light Sensitivity:**

Adjust the sensitivity of the automatic headlights higher (right) or lower (left).

**Light Off Delay:**

Choose the duration of the automatic headlight off timer from 0, 30, 45, 60, 90, 120, 150 and 180 second periods.

**Speed Sensing Wiper Interval:**

When this item is turned to ON, the wiper interval is adjusted automatically according to the vehicle speed.

**Selective Door Unlock:**

When this item is turned to ON, only the driver's door is unlocked first after the door unlock operation. When the door handle request switch on the driver's or front passenger's side door is pushed to be unlocked, only the corresponding door is unlocked first. All the doors can be unlocked if the door unlock operation is performed again within 60 seconds.

When this item is turned to OFF, all the doors will be unlocked after the door unlock operation is performed once.

**Intelligent Key Lock/Unlock:**

When this item is turned to ON, door lock/unlock function by pushing the door handle request switch will be activated.

**Return All Settings to Default:**

Select this item and then select "YES" to return all settings to the default.

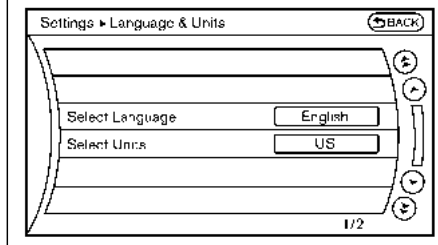


SAA2490

## Language & Units settings

The Language & Units settings display will appear when pushing the SETTING button, selecting the "Others" key, and then selecting the "Language & Units" key.

**Select Language:**

Select the "Select Language" key. Choose "English", "Français" or "Español" for your favorite display appearance.

If you select the "Français" key, the French language will be displayed, so please use the French Owner's Manual. To obtain a French Owner's Manual, see "Owner's Manual/Service Manual order information" (P.10-26).

**Select Units:**

Select the "Select Units" key. Choose "US" (Mile, °F, MPG) or "Metric" (km, °C, L/100 km) for your favorite display appearance.

## Voice Recognition settings

For details about the "Voice Recognition" settings, see "NISSAN Voice Recognition System (models with navigation system)" (P.4-99).

## Camera settings

The "Camera" screen will appear when selecting the "Camera" key.

For details about the camera system operation, see "RearView Monitor (models with navigation system)" (P.4-17).

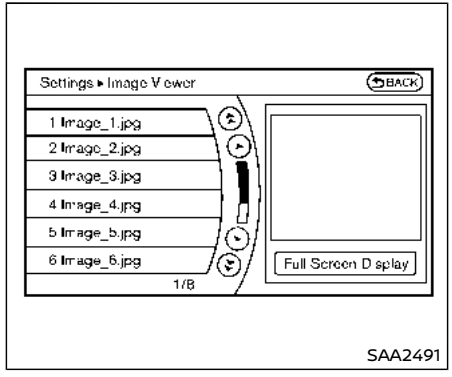


SAA2491

## Image Viewer

The image files in the USB memory will be displayed. To display the Image Viewer, push the SETTING button, select the "Other" key and then select the "Image Viewer" key. The image of the selected file is displayed on the right side of the screen.

When a number of folders are included in the USB memory, select a folder from the list to display the file list.

Images will not be shown on the display while the vehicle is in any drive position to reduce driver distraction. To view images, stop the vehicle in a safe location and apply the parking brake.

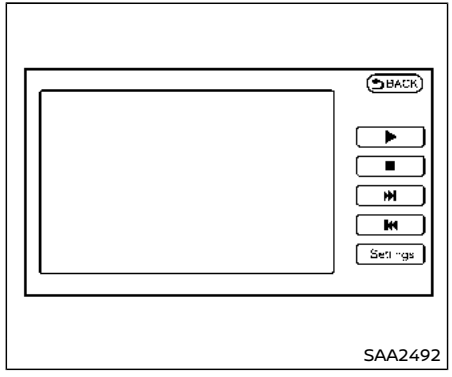


SAA2492

**Full Screen Display:**

The full screen display will appear when selecting the "Full Screen Display" key.

To operate the Image Viewer or to change the settings, select the desired key using the multi-function controller.

- [▶] (Start)
  Select the "[▶]" key to start playing the slideshow.
- [■] (Stop)
  Select the "[■]" key to stop the slideshow.
- [⏭] (Next)
  Select the "[⏭]" key to display the next file.

- [⏮] (Previous)
  Select the "⏮" key to display the previous file.

**Setting the Image Viewer:**

The Image Viewer setting display will appear when selecting the "Settings" key on the full screen display. The following settings are available for the full screen display.

- Slideshow Speed
  Select the "Slideshow Speed" key. From the following display, select the changing time from 5, 10, 30, 60 seconds or "No Auto Change".
- Slideshow Order
  Select the "Slideshow Order" key. From the following display, select "Random" or "Order List". For "Order List", the image order is the order of the files as stored on the USB memory.

**Operating tips:**

- Only files that meet the following conditions will be displayed.
  — Image type: JPEG
  — File Extensions: *.jpg, *jpeg
  — Maximum Resolution: 2048 × 1536 pixels
  — Maximum Size: 2-MB
  — Colors: 32768 (15-bit)
  — Maximum File Name lengths: 253-Bytes
  — Maximum Folders: 500
  — Maximum Images per Folder: 1024
- If an electronic device (such as a digital camera) is directly connected to the vehicle using a USB cable, no image will be displayed on the screen.
- If the file name is too long, some file names may not be entirely displayed.
- When the total number of characters in the file name exceeds 100 or if 1 file name in a directory exceeds 100 characters, all files will show a shortened 8-character version. The image will still be displayed when selected.

**WARNING**

**Failure to follow the warnings and instructions for proper use of the RearView Monitor system could result in serious injury or death.**

- **The RearView Monitor is a convenience but it is not a substitute for proper backing. Always turn and look out the windows, and check mirrors to be sure that it is safe to move before operating the vehicle. Always back up slowly.**
- **The system is designed as an aid to the driver in showing large stationary objects directly behind the vehicle, to help avoid damaging the vehicle.**
- **The distance guide line and the vehicle width line should be used as a reference only when the vehicle is on a level paved surface. The distance viewed on the monitor is for reference only and may be different than the actual distance between the vehicle and displayed objects.**

## CAUTION

**Do not scratch the camera lens when cleaning dirt or snow from the front of the camera.**

The RearView Monitor system automatically shows a rear view of the vehicle when the shift lever is placed in the "R" (Reverse) position.

The radio can still be heard while the RearView Monitor is active.

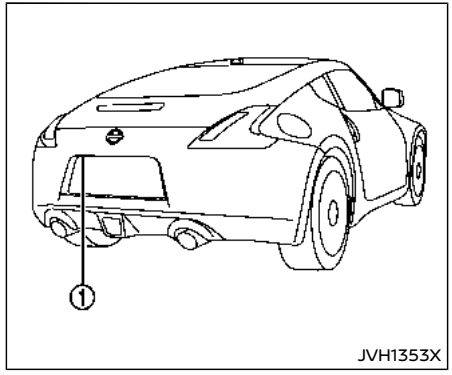


To display the rear view, the RearView Monitor system uses a camera located just above the vehicle's license plate ①.

### REARVIEW MONITOR SYSTEM OPERATION

With the ignition switch in the "ON" position, move the shift lever to the "R" (Reverse) position to operate the RearView Monitor.

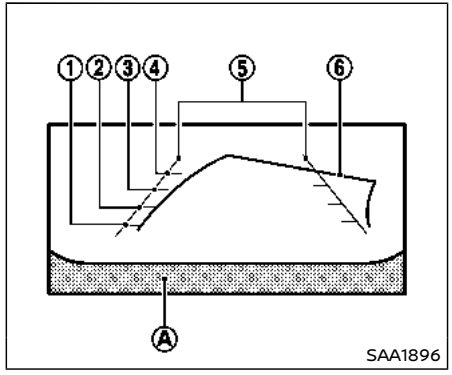


### HOW TO READ DISPLAYED LINES

Guiding lines which indicate the vehicle width and distances to objects with reference to the bumper line Ⓐ are displayed on the monitor.

**Distance guide lines:**

Indicate distances from the bumper.

- Red line ①: approx. 1.5 ft (0.5 m)
- Yellow line ②: approx. 3 ft (1 m)
- Green line ③: approx. 7 ft (2 m)
- Green line ④: approx. 10 ft (3 m)

**Vehicle width guide lines ⑤:**

Indicate the vehicle width when backing up.

**Predictive course lines ⑥:**

Indicate the predictive course when backing up. The predictive course lines will be displayed on the monitor when the shift lever is in the "R" (Reverse) position and the steering wheel is turned. The predictive course lines will move depending on how much the steering wheel is turned and will not be displayed while the steering wheel is in the neutral position.

The vehicle width guide lines and the width of the predictive course lines are wider than the actual width and course.

## HOW TO PARK WITH PREDICTIVE COURSE LINES

**WARNING**

- **If the tires are replaced with different sized tires, the predictive course line may not be displayed correctly.**
- **On a snow-covered or slippery road, there may be a difference between the predictive course line and the actual course line.**
- **The displayed lines will appear slightly off to the right because the rearview camera is not installed in the rear center of the vehicle.**

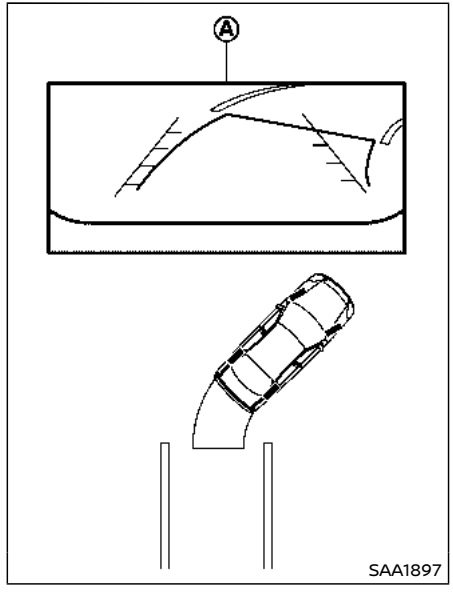


1. Visually check that the parking space is safe before parking your vehicle.
2. The rear view of the vehicle is displayed on the screen Ⓐ when the shift lever is moved to the "R" (Reverse) position.

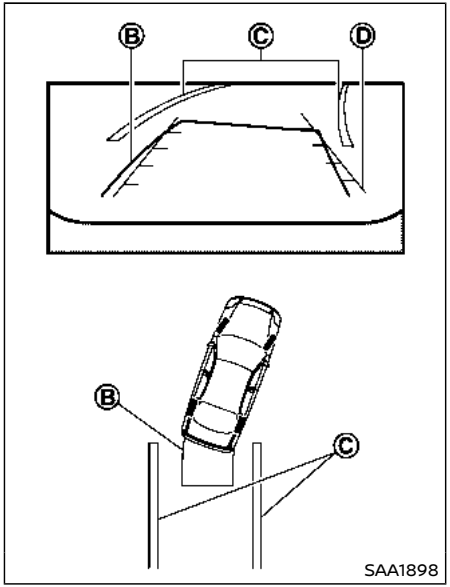


3. Slowly back up the vehicle adjusting the steering wheel so that the predictive course lines Ⓑ enter the parking space Ⓒ.
4. Maneuver the steering wheel to make the vehicle width guide lines Ⓓ parallel to the parking space Ⓒ while referring to the predictive course lines.
5. When the vehicle is parked in the space completely, move the shift lever to the P (Park) position (Automatic Transmission models) or in an appropriate gear (Manual Transmission models) and apply the parking brake.

## Difference between predictive and actual distances

The displayed guide lines and their locations on the ground are for approximate reference only. Objects on uphill or downhill surfaces or projecting objects will be actually located at distances different from those displayed in the monitor relative to the guide lines (refer to illustrations). When in doubt, turn around and view the objects as you are backing up, or park and exit the vehicle to view the positioning of objects behind the vehicle.

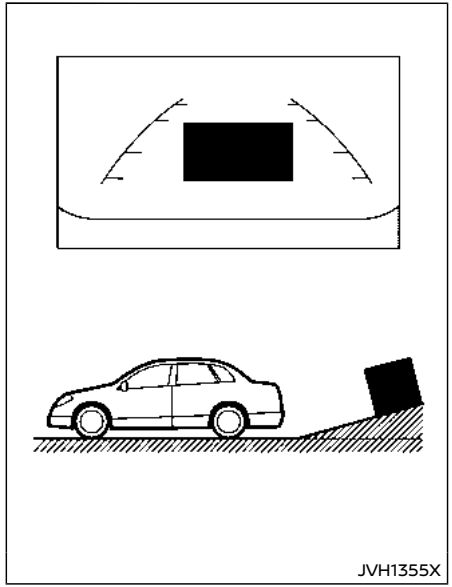


**Backing up on a steep uphill:**

When backing up the vehicle up a hill, the distance guide lines and the vehicle width guide lines are shown closer than the actual distance. Note that any object on the hill is further than it appears on the monitor.

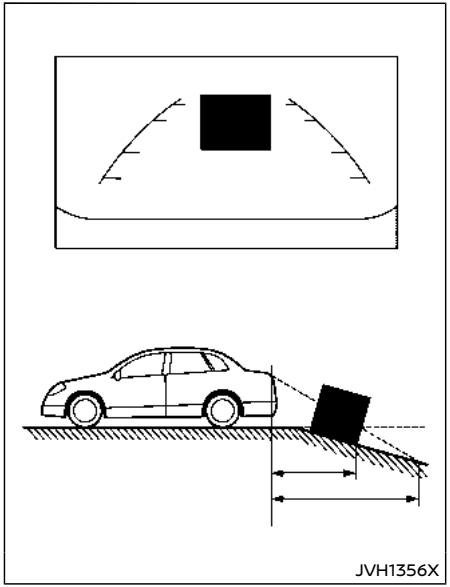


**Backing up on a steep downhill:**

When backing up the vehicle down a hill, the distance guide lines and the vehicle width guide lines are shown further than the actual distance. Note that any object on the hill is closer than it appears on the monitor.

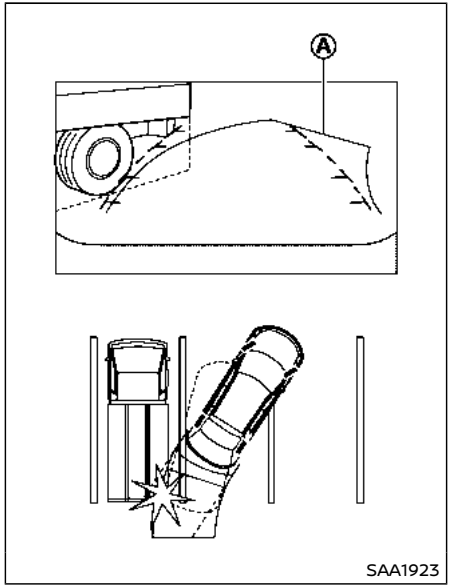


**Backing up near a projecting object:**

The predictive course lines Ⓐ do not touch the object in the display. However, the vehicle may hit the object if it projects over the actual backing up course.

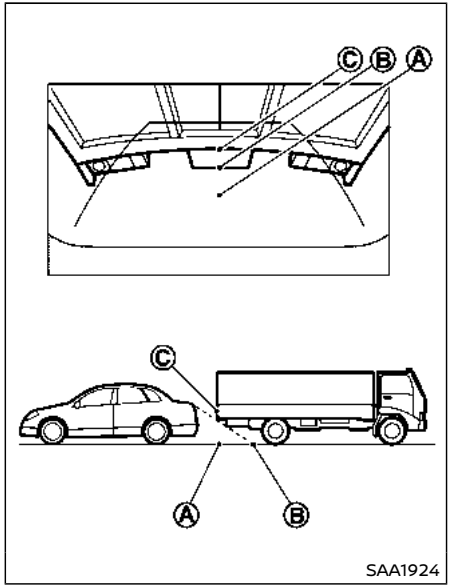


**Backing up behind a projecting object:**

The position Ⓒ is shown further than the position Ⓑ in the display. However, the position Ⓒ is actually at the same distance as the position Ⓐ. The vehicle may hit the object when backing up to the position Ⓐ if the object projects over the actual backing up course.

## ADJUSTING THE SCREEN

To adjust the Display ON/OFF, Brightness, Tint, Color, Contrast and Black Level of the RearView Monitor, push the SETTING button with the RearView Monitor on, select the "Display" key on the screen and select the item key and adjust the level using the multifunction controller.

Do not adjust the Brightness, Tint, Color, Contrast and Black Level of the Rear View Monitor while the vehicle is moving. Make sure the parking brake is firmly applied.

**NOTE:**

**Do not adjust any of the display settings of the RearView Monitor while the vehicle is moving. Make sure the parking brake is firmly applied.**

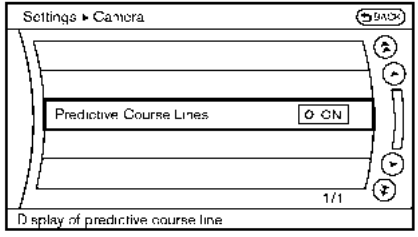


SAA2404

## PREDICTIVE COURSE LINE SETTINGS

To toggle on and off the predictive course lines:

1. Push the **SETTING** button.
2. Select "Others" key and push the **ENTER** button.
3. Select "Camera" key and push the **ENTER** button.

**Predictive Course Lines:**

When this item is turned on, the predictive course lines will be displayed on the monitor when the shift lever is in the "R" (Reverse) position.

## REARVIEW MONITOR SYSTEM LIMITATIONS

**WARNING**

**Listed below are the system limitations for RearView Monitor. Failure to operate the vehicle in accordance with these system limitations could result in serious injury or death.**

- **The system cannot completely eliminate blind spots and may not show every object.**
- **Underneath the bumper and the corner areas of the bumper cannot be viewed on the RearView Monitor because of its monitoring range limitation. The system will not show small objects below the bumper, and may not show objects close to the bumper or on the ground.**
- **Objects viewed in the RearView Monitor differ from actual distance because a wide-angle lens is used.**
- **Objects in the RearView Monitor will appear visually opposite compared to when viewed in the rear view and outside mirrors.**

- **Use the displayed lines as a reference. The lines are highly affected by the number of occupants, fuel level, vehicle position, road conditions and road grade.**
- **Make sure that the trunk lid or rear hatch is securely closed when backing up.**
- **Do not put anything on the rearview camera. The rearview camera is installed above the license plate.**
- **When washing the vehicle with high-pressure water, be sure not to spray it around the camera. Otherwise, water may enter the camera unit causing water condensation on the lens, a malfunction, fire or an electric shock.**
- **Do not strike the camera. It is a precision instrument. Otherwise, it may malfunction or cause damage resulting in a fire or an electric shock.**

The following are operating limitations and do not represent a system malfunction:

- When the temperature is extremely high or low, the screen may not clearly display objects.
- When strong light is directly coming on the camera, objects may not be displayed clearly.
- Vertical lines may be seen in objects on the screen. This is due to strong reflected light from the bumper.
- The screen may flicker under fluorescent light.
- The colors of objects on the RearView Monitor may differ somewhat from the actual color of objects.
- Objects on the monitor may not be clear in a dark environment.
- If dirt, rain or snow accumulates on the camera, the RearView Monitor may not display objects clearly. Clean the camera.
- Do not use wax on the camera window. Wipe off any wax with a clean cloth dampened with mild detergent diluted with water.

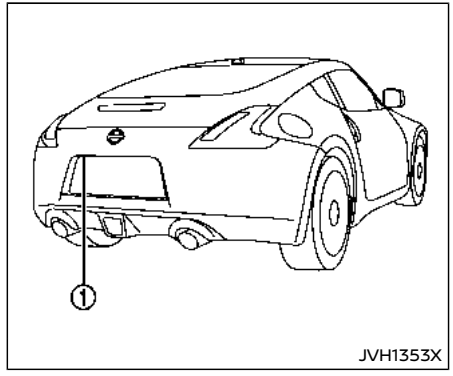


## SYSTEM MAINTENANCE

**CAUTION**

- **Do not use alcohol, benzine or thinner to clean the camera. This will cause discoloration. To clean the camera, wipe with a cloth dampened with diluted mild cleaning agent and then wipe with a dry cloth.**
- **Do not damage the camera as the monitor screen may be adversely affected.**

If dirt, rain or snow accumulates on the camera ①, RearView Monitor may not display objects clearly. Clean the camera by wiping it with a cloth dampened with a diluted mild cleaning agent and then wiping it with a dry cloth.

## VENTILATORS

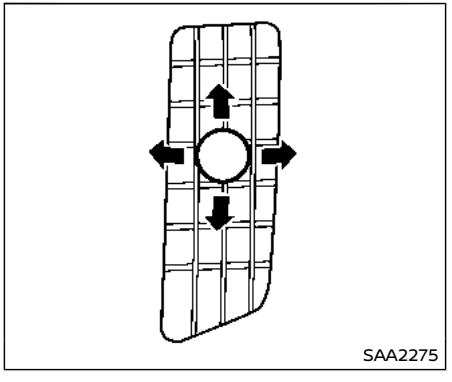


### CENTER VENTILATORS

Open or close, and adjust the air flow direction of ventilators.

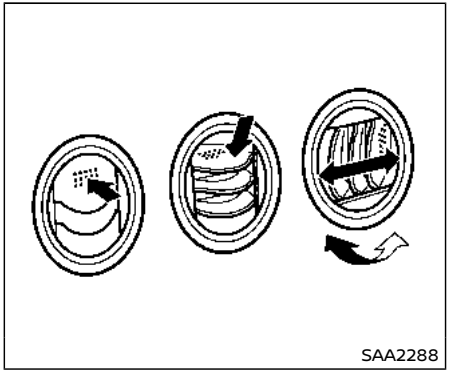


### SIDE VENTILATORS

Open or close, and adjust the air flow direction of ventilators as illustrated.

**WARNING**

- **The air conditioner cooling function operates only when the engine is running.**
- **Do not leave children or adults who would normally require the support of others alone in your vehicle. Pets should not be left alone either. On hot, sunny days, temperatures in a closed vehicle could quickly become high enough to cause severe or possibly fatal injuries to people or animals.**
- **Do not use the recirculation mode for long periods as it may cause the interior air to become stale and the windows to fog up.**

Start the engine and operate the heater and air conditioner system.

**NOTE:**

- **Odors from inside and outside the vehicle can build up in the air conditioner unit. Odor can enter the passenger compartment through the vents.**
- **When parking, set the heater and air conditioner controls to turn off air recirculation to allow fresh air into the passenger compartment. This should help reduce odors inside the vehicle.**

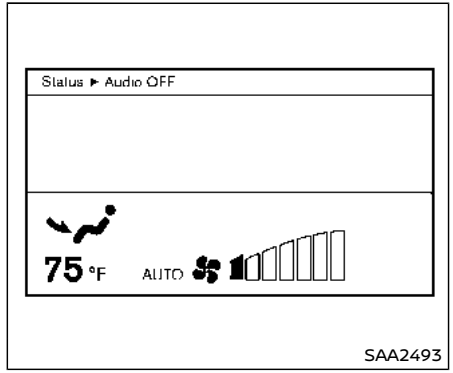


For the models with navigation system, push the **"STATUS"** button to display the heater and air conditioner status screen. (See "How to use STATUS button" (P.4-8).)

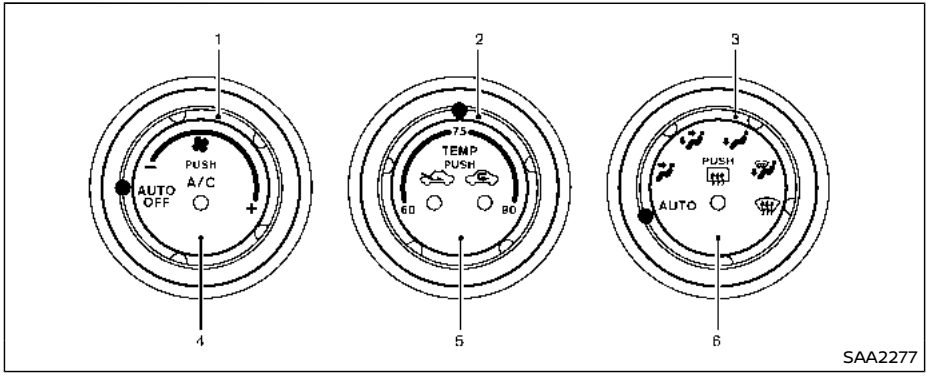


1. " " fan speed control dial
2. Temperature control dial*
   * The display of degrees:
   "60-75-90" is used for °F (US).
   "18-25-32" is used for °C (Canada).
3. Air flow control dial
4. "A/C" air conditioner button
5. Intake air control button (" " outside air and " " air recirculation)
6. " " rear window defroster button (See "Rear window defroster switch" (P.2-33).)

## AUTOMATIC AIR CONDITIONER (Type A) (if so equipped)

### Automatic operation

**Cooling and/or dehumidified heating (AUTO):**

This mode may be used all year round. The system works automatically to control the inside temperature, air flow distribution and fan speed after the preferred temperature is set manually.

1. Turn the " " fan speed control dial and air flow control dial to the "AUTO" position. The air conditioner will automatically turn on.
2. Turn the temperature control dial to set the desired temperature.

- The temperature of the passenger compartment will be maintained automatically. Air flow distribution and fan speed are also controlled automatically.

A visible mist may be seen coming from the ventilators in hot, humid conditions as the air is cooled rapidly. This does not indicate a malfunction.

**Dehumidified defrosting or defogging:**

1. Turn the " " fan speed control dial to the desired position.
2. Turn the air flow control dial to the " " position.
3. Turn the temperature control dial to set the desired temperature.
   - To quickly remove ice from the outside of the windows, turn the " " fan speed control dial to the maximum position.
   - As soon as possible after the windshield is clean, turn the air flow control dial to the "AUTO" position to return to the auto mode.
   - When the air flow control dial is turned to the " " or " " position, the air conditioner will automatically be turned on at outside temperatures above 23°F (−5°C) to

defog the windshield, and the air recirculation mode will automatically be turned off.

Outside air is drawn into the passenger compartment to improve the defogging performance.

## Manual operation

**Fan speed control:**

Turn the " " fan speed control dial clockwise (+) or counterclockwise (–) to manually control the fan speed.

Turn the dial to the "AUTO" position to return to automatic control of the fan speed.

**Temperature control:**

Turn the temperature control dial to set the desired temperature.

- The temperature can be set within the following range.
  - For U.S.: 60 to 90°F (16 to 32°C)
  - For Canada: 64 to 90°F (18 to 32°C)

**Air intake control:**

- Push the " " air intake control button to recirculate interior air inside the vehicle. The indicator light on the " " side will illuminate.

  The air recirculation mode cannot be activated when the air conditioner is in the front defrosting mode " ".
- Push the " " air intake control button to draw outside air into the passenger compartment. The indicator light on the " " side will illuminate.
- To switch to the automatic control mode, push the " " air intake control button for approximately 2 seconds. The indicator lights (both air recirculation and outside air circulation sides) will flash twice, and then the air intake will be controlled automatically.

**Air flow control:**

Turning the air flow control dial selects the air outlet to:

- : Air flows from center and side ventilators.
- : Air flows from center and side ventilators and foot outlets.
- : Air flows mainly from foot outlets.
- : Air flows from defroster and foot outlets.
- : Air flows mainly from defroster outlets.

## To turn the system off

Turn the " " fan speed control dial to the "OFF" position.

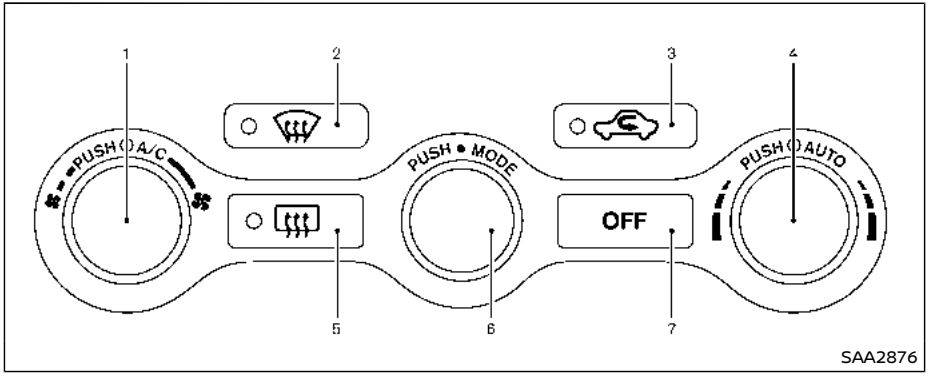


1. "A/C" air conditioner ON/OFF button/ " " fan speed control dial
2. " " front defroster button
3. " " intake air control button
4. "AUTO" automatic air conditioner ON button/Temperature control dial
5. " " rear window defroster button (See "Rear window defroster switch" (P.2-33).)
6. "MODE" manual air flow control button
7. "OFF" button

## AUTOMATIC AIR CONDITIONER (Type B) (if so equipped)

### Automatic operation

**Cooling and/or dehumidified heating (AUTO):**

This mode may be used all year round. The system works automatically to control the inside temperature, air flow distribution and fan speed after the preferred temperature is set manually.

1. Push the "AUTO" button on. (The indicator on the button will illuminate and AUTO will be displayed.)
2. Turn the temperature control dial to set the desired temperature.

- The temperature of the passenger compartment will be maintained automatically. Air flow distribution and fan speed will also be controlled automatically.

A visible mist may be seen coming from the ventilators in hot, humid conditions as the air is cooled rapidly. This does not indicate a malfunction.

**Dehumidified defrosting or defogging:**

1. Push the " " front defroster button. (The indicator light on the button will come on.)
2. Turn the temperature control dial to set the desired temperature.

- To quickly remove ice from the outside of the windows, turn the " " fan speed control dial and set it to the maximum position.
- As soon as possible after the windshield is clean, push the "AUTO" button to return to the auto mode.
- When the " " front defroster button is pushed, the air conditioner will automatically be turned on at outside temperatures above 23°F (−5°C) to defog the windshield, and the air recirculate mode will automatically be turned off.

Outside air is drawn into the passenger compartment to improve the defogging performance.

## Manual operation

**Fan speed control:**

Turn the " " fan speed control dial to manually control the fan speed.

Push the "AUTO" button to return to automatic control of the fan speed.

**Temperature control:**

Turn the temperature control dial to set the desired temperature.

- The temperature can be set within the following range.
  - For U.S.: 60 to 90°F (16 to 32°C)
  - For Canada: 64 to 90°F (18 to 32°C)

**Air intake control:**

- Push the "" air intake control button to recirculate interior air inside the vehicle. The indicator light "" will come on.
  The air recirculation mode cannot be activated when the air conditioner is in the front defrosting mode " ".
- Push the "" air intake control button to switch to the outside air intake mode. The indicator light "" will turn off.
- To switch to the automatic control mode, push the "" air intake control button for approximately 2 seconds. The indicator light will flash, and then the air intake will be controlled automatically.

**Air flow control:**

Pushing the "MODE" manual air flow control button selects the air outlet to:

- : Air flows from center and side ventilators.
- : Air flows from center and side ventilators and foot outlets.
- : Air flows mainly from foot outlets.
- : Air flows from defroster and foot outlets.

## To turn the system off

Push the "OFF" button.

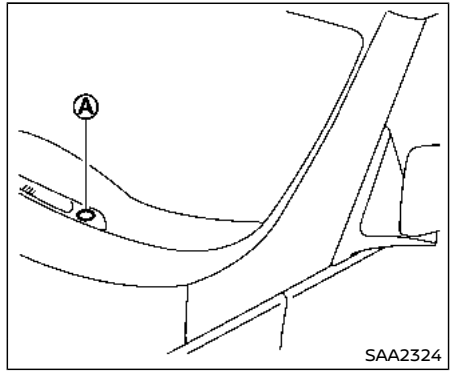

SAA2324

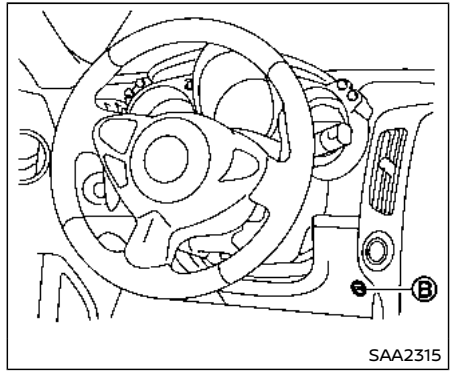

SAA2315

## OPERATING TIPS

When the engine coolant temperature and outside air temperature are low, the air flow from the foot outlets may not operate. This is not a malfunction. After the coolant temperature warms up, air will flow normally from the foot outlets.

The sensors Ⓐ and Ⓑ on the instrument panel helps maintain a constant temperature. Do not put anything on or around this sensor.

## IN-CABIN MICROFILTER

The air conditioning system is equipped with an in-cabin microfilter which collects dirt, pollen, dust, etc. To make sure the air conditioner heats, defogs, and ventilates efficiently, replace the filter in accordance with the specified maintenance intervals listed in the "9. Maintenance and schedules" section. It is recommended to see a NISSAN dealer to replace the filter.

**The filter should be replaced if air flow is extremely decreased or when windows fog up easily when operating heater or air conditioning system.**

## SERVICING AIR CONDITIONER

The air conditioning system in your NISSAN is charged with a refrigerant designed with the environment in mind. **This refrigerant will not harm the earth's ozone layer.** However, special charging equipment and lubricant are required when servicing your NISSAN air conditioner. Using improper refrigerants or lubricants will cause severe damage to your air conditioning system. (See "Capacities and recommended fluids/lubricants" (P.10-2) for air conditioning system refrigerant and lubricant recommendations.)

Your NISSAN dealer will be able to service your environmentally friendly air conditioning system.

**WARNING**

**The system contains refrigerant under high pressure. To avoid personal injury, any air conditioner service should be done only by an experienced technician with the proper equipment.**

## AUDIO OPERATION PRECAUTIONS

### Radio

Push the ignition switch to the ACC or ON position and push the radio band select button to turn on the radio. If you listen to the radio with the engine not running, the ignition switch should be pushed to the ACC position.

Radio reception is affected by station signal strength, distance from radio transmitter, buildings, bridges, mountains and other external influences. Intermittent changes in reception quality normally are caused by these external influences.

**Using a cellular phone in or near the vehicle may influence radio reception quality.**

**Radio reception:**

Your NISSAN radio system is equipped with state-of-the-art electronic circuits to enhance radio reception. These circuits are designed to extend reception range, and to enhance the quality of that reception.

However there are some general characteristics of both FM and AM radio signals that can affect radio reception quality in a moving vehicle, even when the finest equipment is used. These characteristics

are completely normal in a given reception area, and do not indicate any malfunction in your NISSAN radio system.

Reception conditions will constantly change because of vehicle movement. Buildings, terrain, signal distance and interference from other vehicles can work against ideal reception. Described below are some of the factors that can affect your radio reception.

Some cellular phones or other devices may cause interference or a buzzing noise to come from the audio system speakers. Storing the device in a different location may reduce or eliminate the noise.

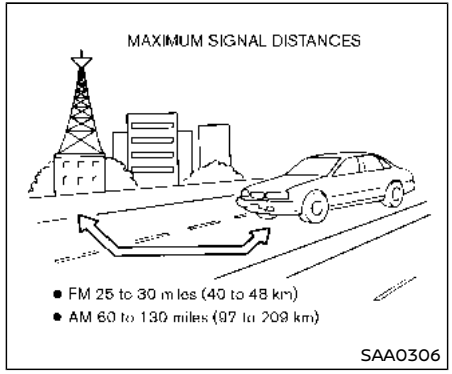


**FM radio reception:**

Range: FM range is normally limited to 25 to 30 miles (40 to 48 km), with monaural (single channel) FM having slightly more range than stereo FM. External influences may sometimes interfere with FM station reception even if the FM station is within 25 miles (40 km). The strength of the FM signal is directly related to the distance between the transmitter and receiver. FM signals follow a line-of-sight path, exhibiting many of the same characteristics as light. For example they will reflect off objects.

Fade and drift: As your vehicle moves away from a station transmitter, the signals will tend to fade and/or drift.

Static and flutter: During signal interference from buildings, large hills or due to antenna position, usually in conjunction with increased distance from the station transmitter, static or flutter can be heard. This can be reduced by lowering the treble setting to reduce the treble response.

Multipath reception: Because of the reflective characteristics of FM signals, direct and reflected signals reach the receiver at the same time. The signals may cancel each other, resulting in momentary flutter or loss of sound.

**AM radio reception:**

AM signals, because of their low frequency, can bend around objects and skip along the ground. In addition, the signals can be bounced off the ionosphere and bent back to earth. Because of these characteristics. AM signals are also subject to interference as they travel from transmitter to receiver.

Fading: Occurs while the vehicle is passing through freeway underpasses or in areas with many tall buildings. It can also occur for several seconds during ionospheric turbulence even in areas where no obstacles exist.

Static: Caused by thunderstorms, electri-

cal power lines, electric signs and even traffic lights.

**Satellite radio reception (if so equipped):**

When the satellite radio is used for the first time or the battery has been replaced, the satellite radio may not work properly. This is not a malfunction. Wait more than 10 minutes with the satellite radio ON and the vehicle outside of any metal or large building for the satellite radio to receive all of the necessary data.

The satellite radio mode requires an active SiriusXM Satellite Radio subscription. The satellite radio is not available in Alaska, Hawaii and Guam.

The satellite radio performance may be affected if cargo carried on the roof blocks the satellite radio signal.

If possible, do not put cargo near the satellite antenna.

A build up of ice on the satellite radio antenna can affect satellite radio performance. Remove the ice to restore satellite radio reception.

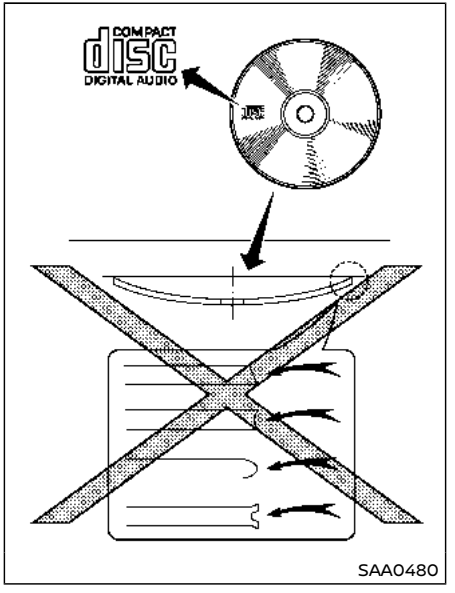


## Compact Disc (CD) player

- Do not force a compact disc into the CD insert slot. This could damage the CD and/or CD changer/player.
- Trying to load a CD with the CD door closed could damage the CD and/or CD changer.
- During cold weather or rainy days, the player may malfunction due to the humidity. If this occurs, remove the CD and dehumidify or ventilate the player completely.
- The player may skip while driving on rough roads.
- The CD player sometimes cannot function when the passenger compartment temperature is extremely high. Decrease the temperature before use.
- Only use high quality 4.7 in (12 cm) round discs that have the "COMPACT disc DIGITAL AUDIO" logo on the disc or packaging.
- Do not expose the CD to direct sunlight.
- CDs that are of poor quality, dirty, scratched, covered with fingerprints, or that have pin holes may not work properly.
- The following CDs may not work properly:
  — Copy control compact discs (CCCD)
  — Recordable compact discs (CD-R)
  — Rewritable compact discs (CD-RW)
- Do not use the following CDs as they may cause the CD player to malfunction.

— 3.1 in (8 cm) discs
— CDs that are not round
— CDs with a paper label
— CDs that are warped, scratched, or have abnormal edges

- This audio system can only play pre-recorded CDs. It has no capabilities to record or burn CDs.
- If the CD cannot be played, one of the following messages will be displayed.

  CHECK DISC:
  — Confirm that the CD is inserted correctly (the label side is facing up, etc.).
  — Confirm that the CD is not bent or warped and it is free of scratches.

  PUSH EJECT:

  This is an error due to the temperature inside the player is too high. Remove the CD by pushing the EJECT button, and after a short time reinsert the CD. The CD can be played when the temperature of the player returns to normal.

  UNPLAYABLE:

  The file is unplayable in this audio system (only MP3 or WMA CD).

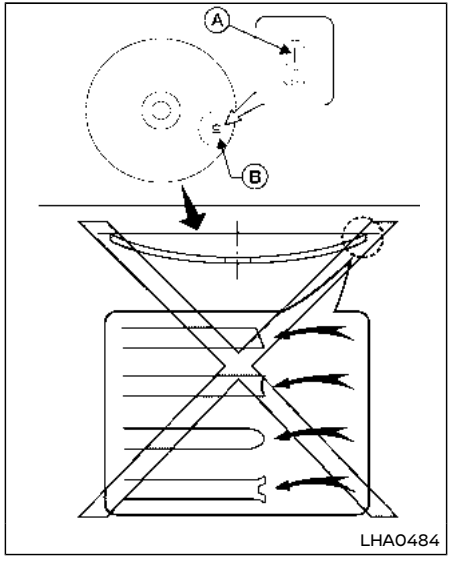


## DVD (Digital Versatile Disc) player (models with navigation system)

- Do not force a compact disc into the CD/DVD insert slot. This could damage the CD/DVD player.
- During cold weather or rainy days, the player may malfunction due to humidity. If this occurs, remove the CD/DVD and dehumidify or ventilate the player completely.
- The player may skip while driving on rough roads.
- The CD/DVD player sometimes cannot function when the passenger compartment temperature is extremely high. Decrease the temperature before use.
- Only use high quality 4.7 in (12 cm) round discs that have the "COMPACT disc DIGITAL AUDIO" or "DVD Video" logo on the disc or packaging.
- Do not expose the CD/DVD to direct sunlight.
- CD/DVDs that are of poor quality, dirty, scratched, covered with fingerprints, or that have pinholes may not work properly.
- The following CD/DVDs are not guaranteed to play:
  — Copy control compact discs (CCCD)
  — Recordable compact discs (CD-R)
  — Rewritable compact discs (CD-RW)
  — Recordable DVDs (DVD±R, DVD±R DL)
  — Rewritable DVDs (DVD±RW, DVD±RW DL)
- Do not use the following CD/DVDs as they may cause the CD/DVD player to malfunction.

— 3.1 in (8 cm) discs
— CD/DVDs that are not round
— CD/DVDs with a paper label
— CD/DVDs that are warped, scratched or have abnormal edges
— This audio system can only play prerecorded CD/DVDs. It has no capabilities to record or burn CD/DVDs.

- If the CD/DVD cannot be played, one of the following messages will be displayed.

  Disc Read Error:
  — Confirm that the CD/DVD is inserted correctly (the label side is facing up, etc.).
  — Confirm that the CD/DVD is not bent or warped and it is free of scratches.

  Please Eject Disc:
  — This may be an error due to the temperature inside the player being too high. Remove the CD/DVD by pushing the EJECT button, and after a short time reinsert the CD/DVD. The CD/DVD can be played when the temperature of the player returns to normal. If the error persists, consult your local dealer.

  Unplayable File:
  — The file may be copy protected.
  — The file is not MP3, WMA, AAC, M4A or DivX® type.

  Region Invalid:
  — The DVD is not for region 1 or all regions. Use DVDs with a region code "1", "ALL" or "1 included" for your DVD entertainment system. (The region code Ⓐ is displayed as a small symbol printed on the top of the DVD Ⓑ.) This vehicle-installed DVD player cannot play DVDs with a region code other than "1" or "ALL".

**Copyright and trademark:**

- The technology protected by the U.S. patent and other intellectual property rights owned by Macrovision Corporation and other right holders is adopted for this system.
- This copyright protected technology cannot be used without a permit from Macrovision Corporation. It is limited to be personal use, etc., as long as the permit from Macrovision Corporation is not issued.
- Modifying or disassembling is prohibited.
- Dolby digital is manufactured under license from Dolby Laboratories, Inc.
- Dolby and the double D mark "" are trademarks of Dolby Laboratories, Inc.
- DTS and DTS 2.0 "" are registered trademarks of DTS, Inc.

**Parental level (parental control):**

DVDs with the parental control setting can be played with this system. Please use your own judgement to set the parental control with the system.

**Disc selection:**

The following disc formats can be played with the DVD drive.

- DVD-VIDEO
- VIDEO-CD
- CD-DA (Conventional Compact Disc)
- DTS-CD

## USB (Universal Serial Bus) connection port

**WARNING**

**Do not connect, disconnect or operate the USB device while driving. Doing so can be a distraction. If distracted you could lose control of your vehicle and cause an accident or serious injury.**

**CAUTION**

- **Do not force the USB device into the USB connection port. Inserting the USB device tilted or upside-down into the port may damage the port. Make sure that the USB device is connected correctly into the USB connection port.**
- **Do not grab the USB connection port cover (if so equipped) when pulling the USB device out of the port. This could damage the port and the cover.**
- **Do not leave the USB cable in a place where it can be pulled unintentionally. Pulling the cable may damage the port.**

The vehicle is not equipped with a USB device. USB devices should be purchased separately as necessary.

This system cannot be used to format USB devices. To format a USB device, use a personal computer.

In some states/area, the USB device for the front seats plays only sound without images for regulatory reasons, even when the vehicle is parked.

This system supports various USB memory devices, USB hard drives and iPod® players. Some USB devices may not be supported by this system.

- Partitioned USB devices may not be played correctly.
- Some characters used in other languages (Chinese, Japanese, etc.) may not appear properly in the display. Using English language characters with a USB device is recommended.

**General notes for USB use:**

Refer to your device manufacturer's owner information regarding the proper use and care of the device.

**Notes for iPod® use:**

"Made for iPod®", "Made for iPhone®", and "Made for iPad®" mean that an electronic accessory has been designed to connect specifically to iPod®, iPhone®, or iPad®, respectively, and has been certified by the developer to meet Apple performance standards.

Apple is not responsible for the operation of this device or its compliance with safety and regulatory standards.

Please note that the use of this accessory with iPod®, iPhone®, or iPad® may affect wireless performance.

iPad®, iPhone®, iPod®, iPod classic®, iPod nano®, iPod shuffle®, and iPod touch® are trademarks of Apple Inc., registered in the U.S. and other countries. Lightning is a trademark of Apple Inc.

- Improperly plugging in the iPod® may cause a checkmark to be displayed on and off (flickering). Always make sure that the iPod® is connected properly.
- An iPod nano® (1st Generation) may remain in fast forward or rewind mode if it is connected during a seek operation. In this case, please manually reset the iPod®.
- An iPod nano® (2nd Generation) will continue to fast-forward or rewind if it is disconnected during a seek operation.
- An incorrect song title may appear when the Play Mode is changed while using an iPod nano® (2nd Generation)
- Audiobooks may not play in the same order as they appear on an iPod®.
- Large video files cause slow responses in an iPod®. The vehicle center display may momentarily black out, but will soon recover.
- If an iPod® automatically selects large video files while in the shuffle mode, the vehicle center display may momentarily black out, but will soon recover.

## Compressed Audio Files (MP3/ WMA/AAC) (if so equipped)

**Explanation of terms:**

- MP3 — MP3 is short for Moving Pictures Experts Group Audio Layer 3. MP3 is the most well known compressed digital audio file format. This format allows for near "CD quality" sound, but at a fraction of the size of normal audio files. MP3 conversion of an audio track can reduce the file size by approximately a 10:1 ratio (Sampling: 44.1 kHz, Bit rate: 128 kbps) with virtually no perceptible loss in quality. The compression reduces certain parts of sound that seem inaudible to most people.
- WMA — Windows Media Audio (WMA) is a compressed audio format created by Microsoft as an alternative to MP3. The WMA codec offers greater file compression than the MP3 codec, enabling storage of more digital audio tracks in the same amount of space when compared to MP3s at the same level of quality.

  This product is protected by certain intellectual property rights of Microsoft Corporation and third parties. Use or distribution of such technology outside of this product is prohibited without a license from Microsoft or an authorized Microsoft subsidiary and third parties.
- AAC/M4A — Advanced Audio Coding (AAC) is a lossy audio compression format. Audio files that have been encoded with AAC are generally smaller in size and deliver a higher quality of sound than MP3.
- Bit rate — Bit rate denotes the number of bits per second used by a digital music file. The size and quality of a compressed digital audio file is determined by the bit rate used when encoding the file.
- Sampling frequency — Sampling frequency is the rate at which the samples of a signal are converted from analog to digital (A/D conversion) per second.
- Multisession — Multisession is one of the methods for writing data to media. Writing data once to the media is called a single session, and writing more than once is called a multisession.
- ID3/WMA Tag — The ID3/WMA tag is the part of the encoded MP3 or WMA file that contains information about the digital music file such as song title, artist, album title, encoding bit rate, track time duration, etc. ID3 tag information is displayed on the Album/ Artist/Track title line on the display.

* Windows® and Windows Media® are registered trademarks or trademarks of Microsoft Corporation in the United States of America and/or other countries.

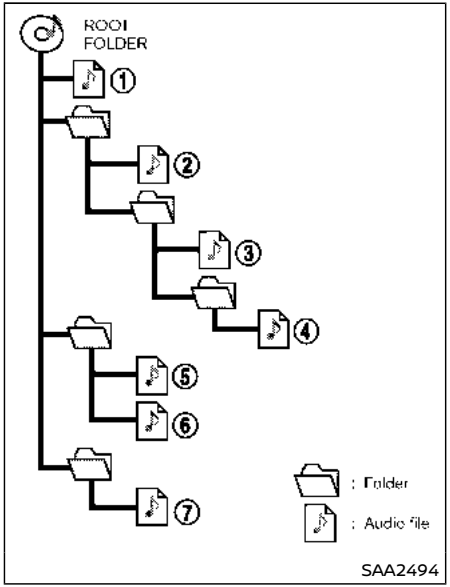


**Playback order:**

- The folder names of folders not containing compressed audio files are not shown in the display.
- If there is a file in the top level of a disc/USB, “Root Folder” is displayed.
- The playback order is the order in which the files were written by the writing software, so the files might not play in the desired order.
- Music playback order of compressed audio files is as illustrated.

**Specification chart:**

| | | |
|---|---|---|
| Supported media | | CD, CD-R, CD-RW, DVD-ROM*5, DVD±R*5, DVD±RW*5, DVD±R DL*5, USB2.0 |
| Supported file systems | Models with navigation system | CD, CD-R, CD-RW, DVD-ROM, DVD±R, DVD±RW, DVD±R DL: ISO9660 LEVEL1, ISO9660 LEVEL2, Romeo, Joliet<br>* ISO9660 Level 3 (packet writing) is not supported.<br>* Files saved using the Live File System component (on a Windows Vista-based computer) are not supported.<br>UDF Bridge (UDF1.02+ISO9660), UDF1.5, UDF2.0<br>* VDF1.5/VDF2.0 (packet writing) is not supported. |
| | Models without navigation system | CD, CD-R, CD-RW: ISO9660 LEVEL1, ISO9660 LEVEL2, Romeo, Joliet<br>* ISO9660 Level 3 (packet writing) is not supported.<br>* Files saved using the Live File System component (on a Windows Vista-based computer) are not supported. |
| | | USB memory: FAT16, FAT32 |

| | | | |
|---|---|---|---|
| Supported versions*1 | MP3 | Version | Models with navigation system:<br>MPEG1 Audio Layer 3<br>Models without navigation system:<br>MPEG1, MPEG2, MPEG2.5 |
| | | Sampling frequency | 8 kHz - 48 kHz |
| | | Bit rate | 8 kbps - 320 kbps, VBR*4 |
| | WMA*2 | Version | Models with navigation system:<br>WMA7, WMA8, WMA9<br>Models without navigation system:<br>WMA7, WMA8, WMA9 except WMA9 Pro, WMA9 Lossless, WMA9 Voice |
| | | Sampling frequency | 32 kHz - 48 kHz |
| | | Bit rate | 32 kbps - 192 kbps, VBR (Ver.9)*4 |
| | AAC*5 | Version | MPEG-AAC |
| | | Sampling frequency | 8 kHz - 96 kHz |
| | | Bit rate | 16 kbps - 320 kbps, VBR*4 |
| Tag information (Song title and Artist name) | | | ID3 tag VER1.0, VER1.1, VER2.2, VER2.3, VER2.4 (MP3 only) |
| | | | WMA tag (WMA only) |
| Folder levels | | | With navigation system:<br>Folder levels: 8, Folders: 512 (including root folder), Files: 5000<br>Without navigation system:<br>Folder levels: 8, Folders: 255 (including root folder), files: 512 |
| Displayable character codes*3 | | | 01: ASCII, 02: ISO-8859-1, 03: UNICODE (UTF-16 BOM Big Endian), 04: UNICODE (UTF-16 Non-BOM Big Endian), 05: UNICODE (UTF-8), 06: UNICODE (Non-UTF-16 BOM Little Endian), 07: SHIFT-JIS |

*1 Files created with a combination of 48 kHz sampling frequency and 64 kbps bit rate cannot be played.
*2 Protected WMA files (DRM) cannot be played.
*3 Available codes depend on what kind of media, versions and information are going to be displayed.
*4 When VBR files are played, the playback time may not be displayed correctly.
*5 Models with navigation system

**Troubleshooting guide:**

| Symptom | Cause and Countermeasure |
|---|---|
| Cannot play | Check if the disc or USB device was inserted correctly. |
| | Check if the disc is scratched or dirty. |
| | Check if there is condensation inside the player, and if there is, wait until the condensation is gone (about 1 hour) before using the player. |
| | If there is a temperature increase error, the player will play correctly after it returns to the normal temperature. |
| | If there is a mixture of music CD files (CD-DA data) and compressed audio files on a CD, only the music CD files (CD-DA data) will be played. |
| | Files with extensions other than ".MP3 (.mp3)", ".WMA (.wma)", ".AAC (.aac)", ".M4A (.m4a)", or ".AA3 (.aa3)" cannot be played. In addition, the character codes and number of characters for folder names and file names should be in compliance with the specifications. |
| | Check if the disc or the file is generated in an irregular format. This may occur depending on the variation or the setting of compressed audio writing applications or other text editing applications. |
| | Check if the finalization process, such as session close and disc close, is done for the disc. |
| | Check if the disc or USB device is protected by copyright. |
| Poor sound quality | Check if the disc is scratched or dirty. |
| It takes a relatively long time before the music starts playing. | If there are many folder or file levels on the disc or USB device, some time may be required before the music starts playing. |
| Music cuts off or skips | The writing software and hardware combination might not match, or the writing speed, writing depth, writing width, etc., might not match the specifications. Try using the slowest writing speed. |
| Skipping with high bit rate files | Skipping may occur with large quantities of data, such as for high bit rate data. |
| Move immediately to the next song when playing. | If an unsupported compressed audio file has been given a supported extension like .MP3, or when play is prohibited by copyright protection, the player will skip to the next song. |
| The songs do not play back in the desired order. | The playback order is the order in which the files were written by the writing software, so the files might not play in the desired order. |
| | Random/Shuffle may be active on the audio system or on a USB device. |

## Compressed Video Files (models with navigation system)

**Explanation of terms:**

- DivX® - DivX® refers to the DivX® codec owned by DivX, Inc. used for a lossy compression of video based on MPEG-4.
- AVI - AVI stands for Audio Video Interleave. It is a standard file format originated by Microsoft Corporation. A ".divx" encoded file can be saved into the ".avi" file format for playback on this system if it meets the requirements stated in the table in this section. However, not all the ".avi" files are playable on this system since different encodings can be used than the DivX® codec.
- ASF - ASF stands for Advanced Systems Format. It is a file format owned by Microsoft Corporation. Note: Only ". asf" files that meet the requirements stated in the table in this section can be played.
- Bit rate — Bit rate denotes the number of bits per second used by a digital video file. The size and quality of a compressed digital audio file is determined by the bit rate used when encoding the file.

**Requirement for Supporting Video Playback:**

| | | | |
|---|---|---|---|
| Media | CD, CD-R, CD-RW, DVD, DVD±R, DVD±RW, DVD±RW DL, USB 2.0 Memory | | |
| File Systems | CD,<br>CD-R,<br>CD-RW,<br>DVD,<br>DVD±R,<br>DVD±RW,<br>DVD±RW DL | ISO9660 LEVEL1, ISO9660 LEVEL2, Romeo, Joliet, UDF Bridge (UDF1.02+ISO9660), UDF1.5, UDF2.0<br>- ISO9660 Level 3 (packet writing) is not supported.<br>- Files saved using the Live File System component (on a Windows Vista-based computer) are not supported.<br>- VDF1.5/VDF2.0 (packet writing) is not supported. | |
| | USB Memory | FAT16, FAT32 | |
| File Types | .divx, .avi | Video Codecs | DivX3, DivX4, DivX5, DivX6 |
| | | Audio Codecs | MP3, MPEG2.5 Audio Layer3, Dolby Digital, LPCM |
| | .asf | Video Codec | ISO-MPEG4 |
| | | Audio Codec | G.726 |
| Bit Rates | .divx, .avi | Maximum Average | 4Mbps |
| | | Maximum Peak | 8Mbps |
| Resolution | .divx, .avi | Minimum | 32 × 32 |
| | | Maximum | 720 × 480 |
| | .asf | Minimum | 32 × 32 |
| | | Maximum | 720 × 576 |

## Bluetooth® Audio player (models with navigation system)

Bluetooth® is a trademark owned by Bluetooth SIG, Inc. and licensed to Clarion Co., Ltd.

- Some Bluetooth® audio devices may not be recognized by the in-vehicle audio system.
- It is necessary to set up the wireless connection between a compatible Bluetooth® audio device and the in-vehicle Bluetooth® module before using the Bluetooth® audio player.
- Operating procedure of the Bluetooth® audio player will vary depending on the device. Make sure it is understood how to operate an audio device before using it with this system.
- The Bluetooth® audio player may be stopped under the following conditions:
  - Receiving a hands-free call.
  - Checking the connection to the hands-free phone.
- Do not place a Bluetooth® audio device in an area surrounded by metal or far away from the in-vehicle Bluetooth® module to prevent tone quality degradation and wireless connection disruption.
- While an audio device is connected through a Bluetooth® wireless connection, the battery power of the device may discharge quicker than usual.
- This system supports the Bluetooth® Audio Distribution Profile (A2DP, AVRCP).
- Wireless LAN (Wi-Fi) and the Bluetooth® functions share the same frequency band (2.4 GHz). Using the Bluetooth® and the wireless LAN functions at the same time may slow down or disconnect the communication and cause undesired noise. It is recommended that you turn off the wireless LAN (Wi-Fi) when using the Bluetooth® functions.

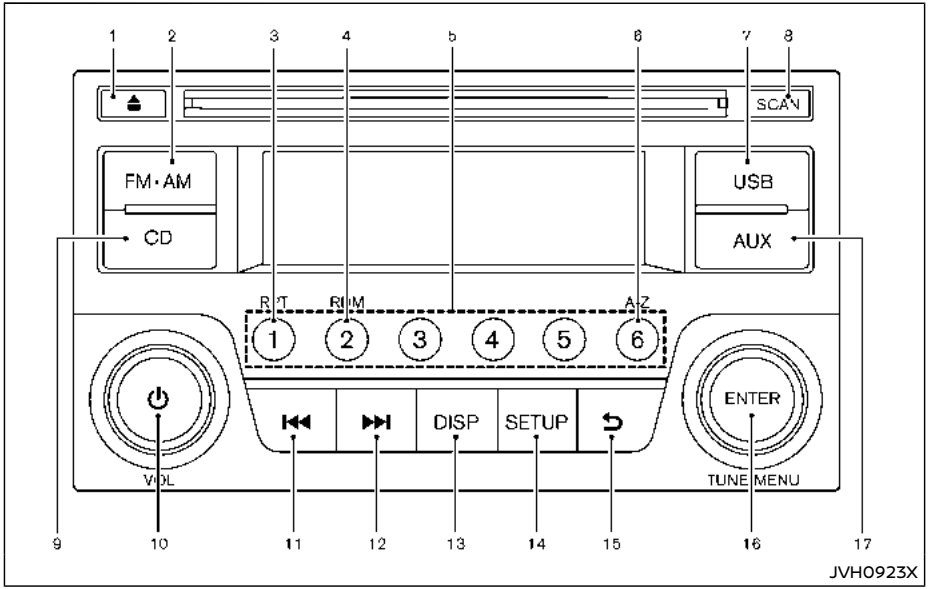


1. CD eject button
2. FM·AM button
3. RPT (repeat) button
4. RDM (random play) button
5. Radio memory buttons
6. A-Z button
7. USB button
8. SCAN button
9. CD button
10. Power button/VOL (volume) control knob
11. Rewind button
12. Fast Forward button
13. DISP (display) button
14. SETUP button
15. Back button
16. TUNE/MENU knob/ENTER button
17. AUX button

## FM-AM RADIO WITH COMPACT DISC (CD) PLAYER

### Audio main operation

The audio system operates when the ignition switch is in the "ACC" or "ON" position.

**POWER ON/OFF:**

To turn on the audio system, push the Power button.

- The system will turn on in the mode which was used immediately before the system was turned off.
- If there is no CD loaded, the radio will be turned on.

To turn off the audio system, push the Power button.

**Volume control:**

To control the volume, turn the VOL control knob.

Turn the VOL control knob clockwise to make the sound louder.

Turn the VOL control knob counterclockwise to make the sound quieter.

**SETUP button:**

To configure Audio, Clock, Language or Scroll direction settings, perform the following procedure:

1. Push the SETUP button.
2. Push the ENTER button.
3. Turn the TUNE/MENU knob clockwise or counterclockwise, the display will appear in the following order:

   Audio ⇔ Clock ⇔ Language ⇔ Scroll Direction

After the desired levels have been set, push either the back button repeatedly, the SETUP button, or wait for 8 seconds without pushing any buttons to exit the menu screen.

**Audio adjustments:**

Push the SETUP button to enter the setup menu screen then select Audio by using TUNE/MENU knob.

Each time the ENTER button is pushed, the mode will change as follows:

Bass → Treble → Fade → Balance → AUX VOL → SPD VOL → Audio (setup menu screen)

Turn the TUNE/MENU knob clockwise or counterclockwise to adjust the following items and push the ENTER button to confirm.

Bass control:

Use this control to enhance or attenuate bass response sound.

Treble control:

Use this control to enhance or attenuate the treble.

Fade control:

Use this control to adjust the balance of the volume between the front and rear (if so equipped) speakers.

Balance control:

Use this control to adjust the balance of the volume between the left and right speakers.

AUX VOL (Auxiliary volume) control:

Use this control to adjust the volume output from the auxiliary source.

SPD VOL (Speed volume) control:

This mode controls the volume output from the speakers automatically in relation to vehicle speed.

Adjusting the setting to 0 (zero) turns off the speed volume feature.

**Clock setting:**

Push the SETUP button to enter the setup menu screen then select Clock.

Turn the TUNE/MENU knob, the mode will change as follows:

Set Time ⇔ ON/OFF ⇔ Clock Format ⇔ Set time

Set Time:

Select Set Time then adjust the clock as follows:

1. The hour display will start flashing. Turn the TUNE/MENU knob to adjust the hour and push the ENTER button.
2. The minute display will start flashing. Turn the TUNE/MENU knob to adjust the minute and push the ENTER button to finish the clock adjustment.

ON/OFF:

Set the clock display between on or off when the audio unit is turned off. If set in the ON position, the clock will be displayed when the audio unit is turned off either by pushing the power button or when the ignition switch is placed in the “OFF” position.

Clock Format:

Switch the clock display between 24-hour mode and 12-hour clock mode.

**Language setting:**

Push the SETUP button to enter the setup menu screen then select Language.

Select the appropriate language and push the ENTER button. Upon completion, the screen will automatically adapt the

language setting.

**Scroll direction:**

Set the scrolling behavior of the TUNE/MENU knob to scroll UP or DOWN.

## FM·AM radio operation

The audio system operates when the ignition switch is in the "ACC" or "ON" position.

**FM·AM button:**

When the FM·AM button is pushed while the audio system is off, the audio system will turn on and the radio will turn on. When the FM·AM button is pushed while another audio source is already operating, it will automatically turn off, and the radio will turn on.

To change the radio bands, push the FM·AM button until the desired band appears.

AM → FM 1 → FM 2 → AM

**TUNE/MENU knob:**

When adjusting the broadcasting station frequency manually, turn the TUNE/MENU knob until the preferred frequency is achieved.

**Seek tuning button:**

When adjusting the broadcasting station frequency automatically, push the button. When the system detects a broadcasting station, it will stop at the station.

① ② ③ ④ ⑤ ⑥ **Radio memory buttons:**

During radio reception, pushing the radio memory button for less than 2 seconds will select the stored radio station.

The audio system can store up to 12 FM station frequencies (six in each of FM 1and FM 2) and 6 AM station frequencies.

To store the station frequency manually:

1. Tune to the desired broadcasting station frequency by using the button.
2. Push and hold a radio memory button ① - ⑥ until a beep sounds. (The radio mutes when the radio memory button is pushed.)
3. The channel indicator will display and the radio mute disengages, indicating that the memory is stored properly.
4. Perform steps 1 - 3 for all other memory buttons.

If the battery cable is disconnected, or if the audio fuse blows, the radio memory will be erased. In such a case, reset the desired stations.

**SCAN button:**

Push the SCAN button to tune from low to high frequencies and stops at each broadcasting station for 5 seconds. Pushing the SCAN button again during this 5 seconds period will stop SCAN tuning and the radio will remain tuned to that station.

If the SCAN button is not pushed within 5 seconds, SCAN tuning moves to the next station.

## CD player operation

The audio system operates when the ignition switch is in the "ACC" or "ON" position.

**Loading:**

Insert a CD into the slot with the label side facing up. The CD will be guided automatically into the slot and will start playing. After loading the CD, the number of tracks and the playtime will appear on the display.

**CAUTION**

**Do not force the CD into the slot. This could damage the player.**

**NOTE:**

- **The CD player accepts normal audio CDs or CDs containing MP3/WMA files.**
- **The audio unit will automatically detect if a CD containing MP3/WMA files is inserted, and "MP3CD" will be indicated.**
- **An error notification message will be displayed when inserting an incompatible disc type (e.g. DVD), or if the player cannot read the CD. Eject the disc and insert another disc.**

**List view:**

While the track is being played, push either the ENTER button or the back button to display the available tracks in a listed view mode. To select a track from the list, or a track to start listening to, turn the TUNE/MENU knob then push the ENTER button.

**Quick search:**

In the list view mode, a quick search can be performed to find a track from the list. Push the A-Z button, turn the TUNE/MENU knob to the first alphabetic letter of the song title and then push the ENTER button. When found, a list of the available songs will be displayed. Select, and push the ENTER button to play the preferred track.

**CD button:**

When the CD button is pushed while the audio system is off and a CD is loaded, the audio system will turn on and a CD will start playing automatically. If another audio source is already playing, it will automatically turn off and the CD will start playing.

**Fast Forward/Rewind buttons:**

Push and hold the ⏮ or ⏭ button to fast forward or rewind through the track. When the button is released, the track will play at normal playing speed.

Track up/down:

Pushing the ⏮ or ⏭ button once, the track will skip forward to the next track or backward to the beginning of the current track. Push the ⏮ or ⏭ button more than once to skip through the tracks.

**Folder browsing:**

If the recorded media contains folders with music files, pushing the ⏮ or ⏭ button will play in sequence the tracks of each folder.

To select a preferred folder:

1. Push the ENTER button or the back button and a list of tracks in the current folder is displayed.
2. Push the back button.
3. Turn the TUNE/MENU knob for the preferred folder.
4. Push the ENTER button to access the folder. Push the ENTER button again to start playing the first track or turn the TUNE/MENU knob, and push the ENTER button to select another track.

If the current selected folder contains sub folders, push the ENTER button, a new screen with a list of sub folders will be displayed. Turn the TUNE/MENU knob for the sub folder then push the ENTER button to select. Select the root folder item when songs are recorded additionally in the root folder.

To return to the previous folder screen, push back button.

**RPT button:**

Push the RPT button and the current track will be played continuously.

**RDM button:**

Push the RDM button and all the tracks will be played in a random order.

**DISP button:**

While a CD with recorded music information tags (CD-text/ID3-text tags) is being

played, the title of the played track is displayed. If the title information is not provided then "Track" is displayed.

When the DISP button is pushed repeatedly, further information about the track can be displayed along with the track title as follows:

CD:

Track time → Album → Artist → Track time

CD with MP3/WMA:

Track time → Album → Artist → Folder name → Track time

Track details:

Pushing and holding the DISP button will turn the display into a detailed overview and after a few seconds it returns to the main display.

**SCAN button:**

When the SCAN button is pushed while a CD is being played, the first 10 seconds of all the tracks will be played.

When the SCAN button is pushed again, the CD will return to normal play from the track which is playing.

**⏏ CD eject button:**

When the CD eject button is pushed while a CD is loaded, the CD will be ejected.

When the CD eject button is pushed twice, the CD will be ejected further, and the CD can be removed with ease.

When the ignition switch is in the "OFF" or "LOCK" position it is possible to eject the CD currently being played. However the audio unit will not be activated.

If a CD is ejected by pushing the CD eject button, and it is not taken out from the loading slot within 8 seconds, the CD will automatically be reloaded to the slot to protect the CD.

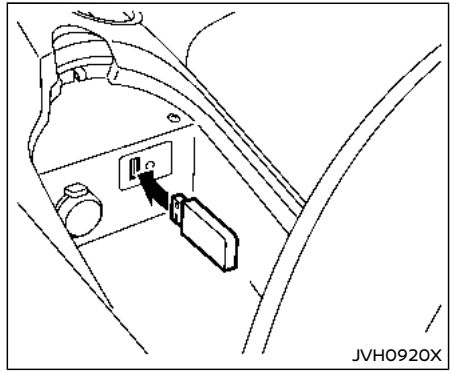


## USB (Universal Serial Bus) connection port

**Connecting USB device:**

The USB connection port is located in the center console. Open the console box lid and connect a USB memory device into the USB connection port. The system switches to the USB mode automatically.

If the system has been turned off while the USB memory device was playing, pushing the power button will start playback of the USB memory device.

**WARNING**

**Do not connect, disconnect or operate the USB device while driving. Doing so can be a distraction. If distracted you could lose control of your vehicle and cause an accident or serious injury.**

**CAUTION**

- **Do not force the USB device into the USB connection port. Inserting the USB device tilted or upside-down into the port may damage the port. Make sure that the USB device is connected correctly into the USB connection port. (Some USB devices come with a mark as a guide. Make sure that the mark is facing the correct direction before inserting the device.)**
- **Do not leave the USB cable in a place where it can be pulled unintentionally. Pulling the cable may damage the port.**

Refer to your device manufacturer's owner information regarding the proper use and care of the device.

**USB button:**

When the USB button is pushed with the system off and the USB memory device is inserted, the system will turn on.

**USB device main operation:**

The following operations are identical to the audio main operation of the Compact Disc (CD) operation. For details, see "CD player operation" (P.4-45).

- List view
- Quick search
- ▶▶| |◀◀
- RDM (Random play)
- RPT (Repeat track)
- SCAN
- Folder browsing

**DISP button:**

While a track with recorded music information tags (ID3-tags) is being played, the title of the played track is displayed. If the tags are not provided then a notification message is displayed.

When the DISP button is pushed repeatedly, further information about the track can be displayed along with the track title as follows:

Track time → Artist → Album → Folder name → Track time

Track details:

Pushing and holding the DISP button will turn the display into a detailed overview and after a few seconds it returns to the main display, or push the DISP button briefly.

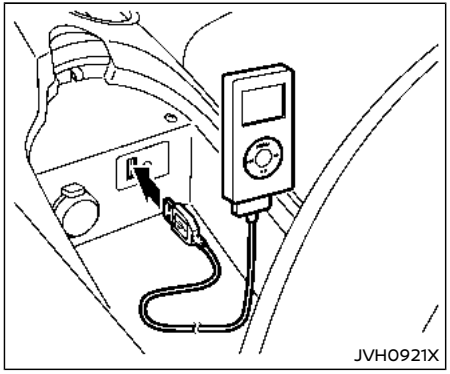


## iPod® player operation

**Connecting iPod®:**

The USB connection port is located in the center console. Open the console box lid and connect the iPod® cable to the USB connection port. The battery of the iPod® is charged while the connection to the vehicle.

Depending on the version of the iPod®, the display on the iPod® shows a NISSAN or Accessory Attached screen when the connection is completed. When the iPod® is connected to the vehicle, the iPod® music library can only be operated by the vehicle audio controls.

**WARNING**

**Do not connect, disconnect or operate the USB device while driving. Doing so can be a distraction. If distracted you could lose control of your vehicle and cause an accident or serious injury.**

**CAUTION**

- **Do not force the USB device into the USB connection port. Inserting the USB device tilted or upside-down into the port may damage the port. Make sure that the USB device is connected correctly into the USB connection port. (Some USB devices come with a mark as a guide. Make sure that the mark is facing the correct direction before inserting the device.)**
- **Do not leave the USB cable in a place where it can be pulled unintentionally. Pulling the cable may damage the port.**

Refer to your device manufacturer's owner information regarding the proper use and care of the device.

**Compatibility:**

The following models are supported:

- Third generation iPhone® (Firmware version IOS4/4.0)
- Fourth generation iPhone® (Firmware version IOS4/4.0)
- Fifth generation iPod® (Firmware version 1.3)
- First generation iPod Classic® (Firmware version 1.1.1 or 1.1.2PC)
- Second generation iPod Classic® (Firmware version 2.0.1)
- First generation iPod touch® (Firmware version 1.1.5 or 2.2.1)
- Second and third generation iPod touch® (Firmware version 2.2.1 or IOS4/4.0.0)
- First generation iPod nano® (Firmware version 1.3.1)
- Second generation iPod nano® (Firmware version 1.1.3)
- Third generation iPod nano® (Firmware version 1.1.2PC or 1.1.3PC)
- Fourth generation iPod nano® (Firmware version 1.0.2 or 1.0.4)
- Fifth generation iPod nano® (Firmware version 1.0.1 or 1.0.2)

The iPod touch® may not response quickly with the system in some cases.

Make sure that the iPod® firmware is updated.

**Operating tips:**

- iPod Shuffle® and iPod mini® are not supported.
- Some iPod® operations may not be available with this system.

**USB button:**

When the USB button is pushed with the system off and the iPod® is connected to the vehicle, the system will turn on.

**iPod® main operation:**

Interface:

The interface for iPod® operation shown on the audio system display is similar to the iPod® interface. Use the TUNE/MENU knob to play a track on the iPod®.

The following items can be chosen from the menu list screen.

- Playlists
- Artists
- Albums
- Tracks
- Genres

For further information about each item, see the iPod® owner's manual.

The following operations are identical to the audio main operation of the Compact Disc (CD) operation. For details, see "CD player operation" (P.4-45).

- List view
- Quick search
- ▶▶| |◀◀
- RDM (Random play)
- RPT (Repeat track)
- Folder browsing

**DISP button:**

While a track with recorded music information tags (ID3-tags) is being played, the title of the played track is displayed. If the tags are not provided then a notification message is displayed.

When the DISP button is pushed repeatedly, further information about the track can be displayed along with the track title as follows:

Track time → Album → Artist → Genre → Track time

Track details:

Pushing and holding the DISP button will turn the display into a detailed overview and after a few seconds it returns to the main display, or push the DISP button briefly.

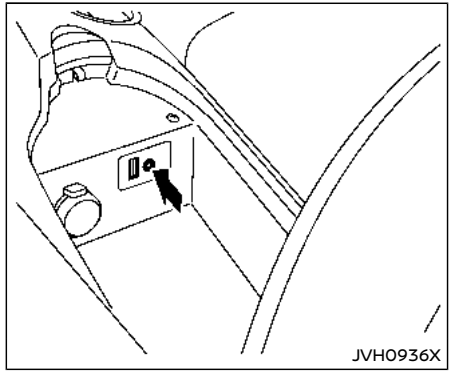


## AUX (Auxiliary) input

**AUX IN jack:**

The AUX IN jack is located in the center console. The AUX IN audio input jack accepts any standard analog audio input such as from a portable cassette tape/CD player, MP3 player or laptop computer.

NISSAN strongly recommends using a stereo mini plug cable when connecting your music device to the audio system. Music may not play properly when a monaural cable is used.

**AUX button:**

Push the AUX button to play a compatible device when it is connected.

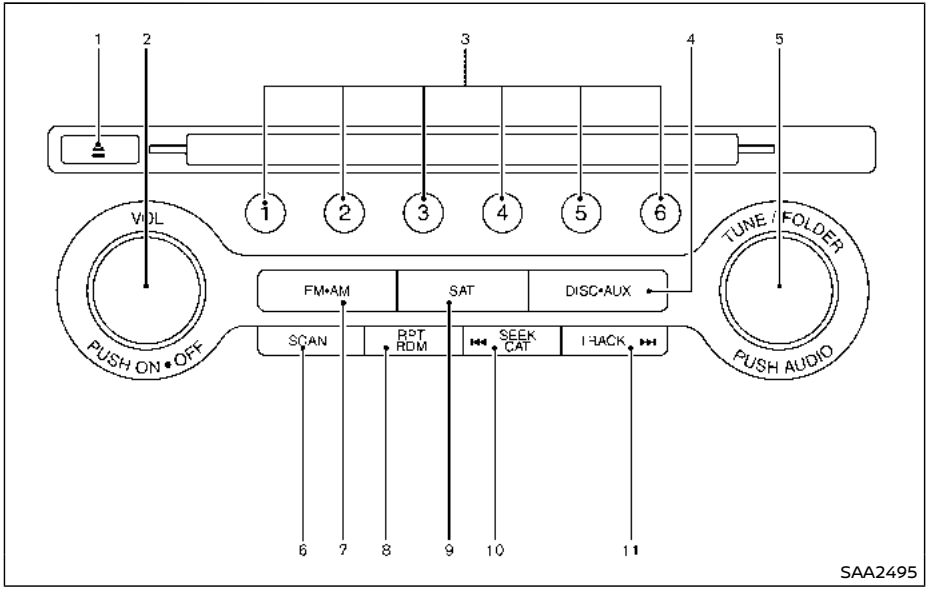


1. DVD·CD EJECT button
2. ON·OFF button/VOL (volume) control knob
3. Radio station preset select buttons
4. DISC·AUX (auxiliary) button
5. Radio TUNE (tuning) folder selector/ AUDIO control knob
6. Radio SCAN tuning button
7. FM·AM band select button
8. RPT (repeat)/RDM (random) play button
9. SAT (satellite) button
10. Radio CAT (category)/REW (rewind) button for SEEK/TRACK
11. FF (fast forward) button for SEEK/TRACK

## FM-AM-SAT RADIO WITH COMPACT DISC (CD) PLAYER

For all operation precautions, see "Audio operation precautions" (P.4-30).

The satellite radio mode requires an active SiriusXM Satellite Radio subscription. The satellite radio is not available in Alaska, Hawaii and Guam.

It may take some time to receive the activation signal after subscribing the SiriusXM Satellite Radio. After receiving the activation signal, an available channel list will be automatically updated in the radio. Push the ignition switch from LOCK to ACC to update the channel list.

### Audio main operation

**Head unit:**

The auto loudness circuit enhances the low and high frequency ranges automatically in both radio reception and CD playback.

**ON·OFF/Volume control:**

Push the ignition switch to the ACC or ON position, and then push the ON·OFF button while the system is off to turn on the last audio source, which was playing immediately before the system was turned off. While the system is on, pushing the ON·OFF button turns the system off.

Turn the VOL control knob to adjust the volume.

**Adjusting tone quality and speaker balance:**

To adjust Bass, Treble, Balance and Fade, push the Audio control knob. When the display shows the setting you want to change (Bass, Treble, Balance and Fade), rotate the Audio control knob to set the desired setting. For the other setting methods, see "How to use SETTING button" (P.4-11).

This vehicle has some sound effect functions as follows:

- Speed Sensitive Vol.

For more details, see "How to use SETTING button" (P.4-11).

**Switching the display:**

Pushing the DISC·AUX button will switch the displays as follows:

iPod®/USB → CD/DVD → Bluetooth® Audio → AUX → iPod®/USB

## FM-AM-SAT radio operation

**FM·AM radio (FM/AM) band select:**

Pushing the radio band select button will change the band as follows:

AM → FM1 → FM2 → AM

**SAT radio (SAT) band select:**

Pushing the radio band select button will change the band as follows:

XM1 → XM2 → XM3 → XM1

When the radio band select button is pushed while the ignition switch is in the ACC or ON position, the radio will come on at the channel last played.

The last channel played will also come on when the ON·OFF button is pushed to ON.

The satellite radio is not available in Alaska, Hawaii and Guam.

If another audio source is playing when the radio band select button is turned to ON, the audio source will automatically be turned off and the last radio channel played will come on.

When the stereo broadcast signal is weak, the radio will automatically change from stereo to monaural reception.

**TUNE (Tuning):**

- For AM and FM radio
  Turn the radio TUNE knob for manual tuning.
- For SiriusXM Satellite Radio
  Turn the radio TUNE knob to seek channels from all of the categories when any category is not selected.

**SEEK tuning/CATEGORY (CAT):**

- For AM and FM radio
  Push the SEEK button ⏮ or ⏭ to tune from low to high or high to low frequencies and to stop at the next broadcasting station.
- For SiriusXM Satellite Radio
  Push the SEEK button ⏮ or ⏭ to tune to the first channel of the next or previous category.

During satellite radio reception, the following notices will be displayed under certain conditions.

- NO SIGNAL (No signal is received while the SAT tuner is connected.)
- OFF AIR (Broadcasting signed off)
- CHECK ANTENNA (Antenna connection error)
- LOADING (When the initial setting is performed)

- UPDATING (When the satellite radio subscription is not active)

**SCAN tuning:**

Push the SCAN tuning button to tune from low to high frequencies and stop at each broadcasting station/channel for 5 seconds. Pushing the button again during this 5 seconds period will stop SCAN tuning and the radio will remain tuned to that station/channel.

If the SCAN tuning button is not pushed within 5 seconds, SCAN tuning moves to the next station/channel.

**① to ⑥ Station memory operations:**

12 stations/channels can be set for the FM band (6 each for FM1 and FM2), 18 for SiriusXM Satellite Radio (6 each for XM1, XM2 and XM3) and 6 stations can be set for the AM band.

1. Choose the radio band using the radio band select button.
2. Tune to the desired station/channel using the SEEK/TRACK, SCAN button or the radio TUNE knob.
3. Push and hold the desired station preset button ① to ⑥ until the radio mutes.
4. The station indicator will then come on and the sound will resume. Memorizing is now complete.
5. Other buttons can be set in the same manner.

If the battery cable is disconnected, or if the fuse opens, the radio memory will be erased. In that case, reset the desired stations/channels.

**List (AM and FM radio):**

When the "List" key on the display is selected while the FM or AM radio is being played, the preset station list will be displayed.

If 1 of the 6 preset stations listed is touched and held, the current station will be stored as the new preset.

**Menu (SiriusXM Satellite Radio):**

When the "Menu" key on the display is selected while the SiriusXM Satellite Radio is being played, the menu list will be displayed.

The following items are available.

- Preset List
  Displays the preset channel list. If 1 of the 6 preset stations listed is touched and held, the current station will be stored as the new preset.
- Customize Channel List
  Selects specific channels to skip while using the TUNE, SEEK/CATEGORY or Menu-Categories feature.
- Favorite Artists & Songs
  Stores the current artist or song that is being played. Touch the "Alert" key to be reminded when the stored artist or song is playing on a station while listening to SiriusXM Satellite Radio.
- Categories
  Selecting a category will go to the first channel in that category as defined by SiriusXM Satellite Radio.
- Direct Tune
  Inputs the channel number by using a keypad.

## Compact Disc (CD) player operation

Push the ignition switch to the ACC or ON position and insert the Compact Disc (CD) into the slot with the label side facing up. The CD will be guided automatically into the slot and start playing.

After loading the CD, the number of tracks on the CD and the play time will appear on the display.

If the radio is already operating, it will automatically turn off and the CD will play.

If the system has been turned off while the CD was playing, pushing the ON·OFF button will start the CD.

Do not use 3.1 in (8 cm) discs.

**DISC AUX PLAY:**

When the DISC·AUX (CD play) button is pushed with the system off and the CD loaded, the system will turn on and the CD will start to play.

When the DISC·AUX button is pushed with the CD loaded and the radio playing, the radio will automatically be turned off and the CD will start to play.

**Menu:**

When the "Menu" key on the display is selected while the CD is being played, the menu screen will be displayed. The following menu options are available.

- Folder List (for CD with compressed audio files)
  Displays the folder list.
- Track List
  Displays the track list.
- Play Mode
  Select a play mode from the following items.
  — Normal
  — 1 Folder Repeat (for CD with compressed audio files)
  — 1 Track Repeat
  — 1 Disc Random
  — 1 Folder Random (for CD with compressed audio files)

**Next/Previous Track and Fast Forward/Rewind:**

When the ⋯⏭ or ⏮⋯ button is pushed for more than 1.5 seconds while the CD is being played, the CD will play while fast forwarding or rewinding. When the button is released, the CD will return to normal play speed.

When the ⋯⏭ or ⏮⋯ button is pushed for less than 1.5 seconds while the CD is being played, the next track or the beginning of the current track on the CD will be played.

When the rewind button is pushed for less than 1.5 seconds within 3 seconds after the current track starts playing, the previous track will be played. Push the button several times to skip through the tracks.

**RPT RDM REPEAT (RPT), RANDOM (RDM):**

When the RPT button is pushed while the CD is played, the play pattern can be changed as follows:

(CD)

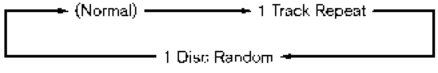


(CD with compressed audio files)

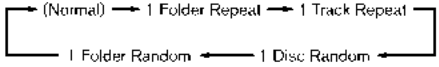


**CD EJECT:**

When the CD EJECT button is pushed with the CD loaded, the CD will be ejected.

**If the CD comes out and is not removed, it will be pulled back into the slot to protect it.**

## DVD (Digital Versatile Disc) PLAYER OPERATION (models with navigation system)

### Precautions

Start the engine when using the DVD entertainment system.

Movies will not be shown on the front display while the vehicle is in any drive position to reduce driver distraction. Audio is available when a movie is played. To view movies in the front display, stop the vehicle in a safe location, move the shift lever to the P (Park) position and apply the parking brake.

## WARNING

- **The driver must not attempt to operate the DVD system or wear the headphones while the vehicle is in motion so that full attention may be given to vehicle operation.**
- **Do not attempt to modify the system to display a movie on the front screen while the vehicle is being driven. Doing so may distract the driver and may cause a collision and serious personal injury or death.**

## CAUTION

- **Only operate the DVD while the vehicle engine is running. Operating the DVD for extended periods of time with the engine OFF can discharge the vehicle battery.**
- **Do not allow the system to get wet. Excessive moisture such as spilled liquids may cause the system to malfunction.**
- **While playing VIDEO-CD media, this DVD player does not guarantee complete functionality of all VIDEO-CD formats.**

### Display settings

To adjust the front display mode, push the SETTING button while the DVD is being played, select the “Others” key and then select the “Display” key.

To adjust the display ON/OFF, brightness, tint, color and contrast, select the “Display Adjustment” key and then select each key.

Then you can adjust each item using the multi-function controller. After changes have been made push the BACK button to save the setting.

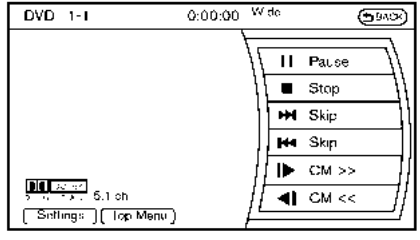

SAA2497

### Playing a DVD

**DISC·AUX button:**

**Park the vehicle in a safe location for the front seat occupants to operate the DVD drive while watching the images.**

Push the DISC·AUX button on the instrument panel and turn the display to the DVD mode.

When a DVD is loaded, it will be replayed automatically.

The operation screen will be turned on when the DISC·AUX button located on the instrument panel is pushed while a DVD is being played, and it will turn off automatically after a period of time. To turn it

on again, push the DISC·AUX button again.

**DVD operation keys:**

When the DVD is playing without the operation screen being shown, you may use the touch screen to select items from the displayed video. You may also use the multifunction controller to select an item from the displayed video. When the operation screen is being shown, use the multifunction controller or touch screen to select an item from the displayed menus.

**PAUSE:**

Select the " ⏸ " key to pause the DVD. To resume playing the DVD, use the "PLAY" key.

**PLAY:**

Select the " ▶ " key to start playing the DVD, for example, after pausing the DVD.

**STOP:**

Select the " ■ " key to stop playing the DVD.

**Next/Previous Chapter:**

Select the " ▶▶| " or " |◀◀ " key to skip the chapter(s) of the disc forward/backward. The chapters will advance/go back the number of times this key is selected.

**Commercial Skip:**

This function is only for DVD-VIDEO, DVD-VR. Select the " |▶ " or " ◀| " key to skip forward or backwards by the set amount as defined in the DVD Settings menu.

**Top Menu:**

When the "Top Menu" key is selected in the screen while a DVD is being played, the top menu specific to each disc will be displayed. For details, see the instructions on the disc.

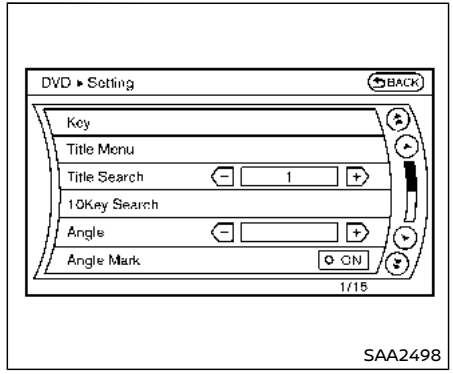


**Example**

## DVD settings

Select the "Settings" key to adjust the following settings.

**Key (DVD-VIDEO):**

Keys for the DVD menu operation are displayed.

: Move the cursor to select a DVD menu.

Enter: Enter the selected menu.

Move: Change the display location by moving the operation key.

Back: Return to the previous screen.

Hide: Hide the operation key.

**Title Menu (DVD-VIDEO):**

Some menus specific to each disc will be shown. For details, see the instructions on the disc.

**Title Search (DVD-VIDEO, DVD-VR):**

The scene with the specified title will be displayed each time the "+" side or "–" side is selected.

**Group Search (VIDEO CD):**

A scene in the specified group will be displayed each time the "+" side or "–" side is selected.

**10 Key Search (DVD-VIDEO, VIDEO-CD, CD-DA, DVD-VR):**

Select the "10 Key Search" key to open the number entry screen. Input the number to be searched and select the "OK" key. The specified Title/Chapter or Group/Track will be played.

**Select No. (VIDEO-CD):**

Select the "Select No." key to open the number entry screen. Input the number to be searched and select the "OK" key. The specified scene will be played.

**Angle (DVD-VIDEO):**

If the DVD contains different angles (such as moving images), the current image angle can be switched to another one. Select the "Angle" key. The angle will change each time the "+" side or "–" side is selected.

**Angle Mark (DVD-VIDEO):**

When this item is turned on, an angle mark will be shown on the bottom of the screen if the scene can be seen from a different angle.

**Menu Skip (DVD-VIDEO):**

DVD menus are automatically configured and the contents will be played directly when the "Menu Skip" key is turned on. Note that some discs may not be played directly even if this item is turned on.

**CM Skip (DVD-VIDEO):**

Select the "CM Skip" key. Choose the setting time from 15, 30 or 60 seconds by selecting the "+" side or "–" side.

**DRC (DVD-VIDEO, DVD-VR):**

DRC (Dynamic Range Compression) automatically adjusts the soundtrack volume level to maintain a more even sound to the speakers.

**DVD Language (DVD-VIDEO, VIDEO-CD):**

Select the "DVD Language" key to open the number entry screen. Input the number corresponding to the preferred language and select the "OK" key. The DVD top menu language will be changed to the one specified.

**Display:**

To adjust the image quality of the screen, select the preferred adjustment items.

**Audio:**

Select the preferred language for audio.

**Subtitle (DVD-VIDEO, DVD-VR):**

Select the preferred language for subtitles.

**Display Mode (DVD-VIDEO, VIDEO-CD, DVD-VR):**

Select from the "Full", "Wide", "Normal" or "Cinema" modes.

**Title List (DVD-VR):**

Select the preferred title from the list.

**Play Mode:**

Select the preferred play mode.

**PG/PL Mode (DVD-VR):**

Select the "PG" or "PL" mode.

USB (Universal Serial Bus) CONNECTION PORT (models with navigation system)

Audio main operation

**WARNING**

**Do not connect, disconnect or operate the USB device while driving. Doing so can be a distraction. If distracted you could lose control of your vehicle and cause an accident or serious injury.**

**CAUTION**

- **Do not force the USB device into the USB connection port. Inserting the USB device tilted or upside-down into the port may damage the port. Make sure that the USB device is connected correctly into the USB connection port.**
- **Do not grab the USB connection port cover (if so equipped) when pulling the USB device out of the port. This could damage the port and the cover.**
- **Do not leave the USB cable in a place where it can be pulled unintentionally. Pulling the cable may damage the port.**

Refer to your device manufacturer's owner information regarding the proper use and care of the device.

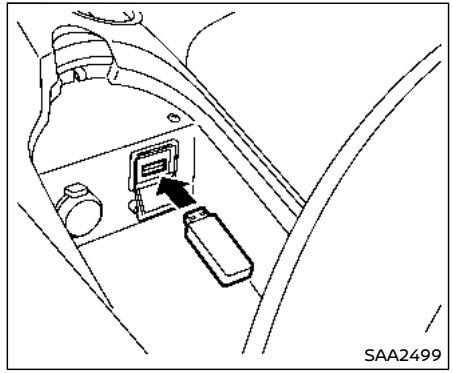


Open the console lid and connect a USB memory as illustrated. Then, push the DISC·AUX button repeatedly to switch to the USB memory mode.

If the system has been turned off while the USB memory was playing, pushing the ON·OFF/VOL control knob will start the USB memory.

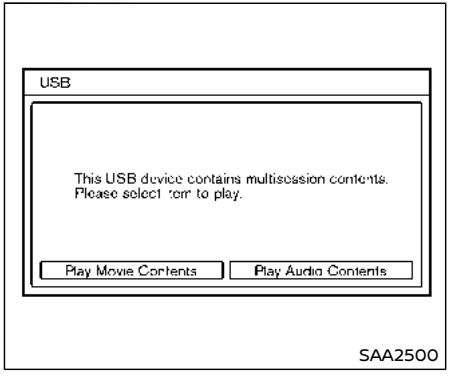

SAA2500

## File selection

When there are both audio and movie files in the USB memory, the mode select screen is displayed. Select the preferred contents to play.

When there is only one type of file, the audio or movie operation screen is displayed and starts to play.

If a video file restricts the number of playbacks, a pop-up screen will appear to confirm it is ok to play. Answer yes or no as requested by the display.

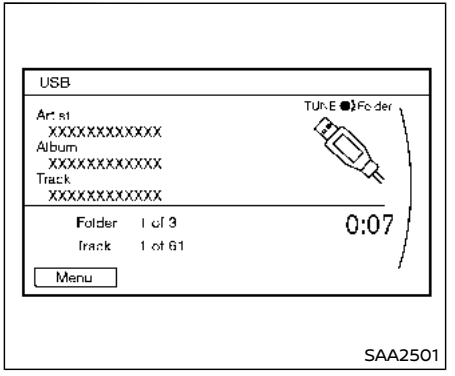

SAA2501

## Audio file operation

**DISC AUX PLAY:**

When the DISC·AUX button is pushed with the system off and the USB memory inserted, the system will turn on.

If another audio source is playing with an USB memory inserted, push the DISC·AUX button repeatedly until the center display changes to the USB memory mode.

**Next/Previous File and Fast Forward/Rewind:**

When the button is pushed for more than 1.5 seconds while a USB memory is being played, the USB memory will play while forwarding or rewinding. When the button is released, the USB memory will return to normal play speed.

When the or button is pushed for less than 1.5 seconds while the USB memory is being played, the next track or the beginning of the current track on the USB memory will be played.

When the rewind button is pushed for less than 1.5 seconds within 3 seconds after the current track starts playing, the previous track will be played. Push the button several times to skip through the tracks.

The multi-function controller can also be used to select tracks when the USB memory is being played.

**Folder selection:**

To change to another folder in the USB memory, turn the folder selector or choose a folder displayed on the screen using the multi-function controller.

**RPT RDM REPEAT (RPT), RANDOM (RDM):**

When the RPT button is pushed while the USB memory is played, the play pattern can be change as follows.

To change the play mode, push the RPT button repeatedly and the mode will change as follows.

Normal → 1 Folder Repeat → 1 Track Repeat → All Random → 1 Folder Random → Normal

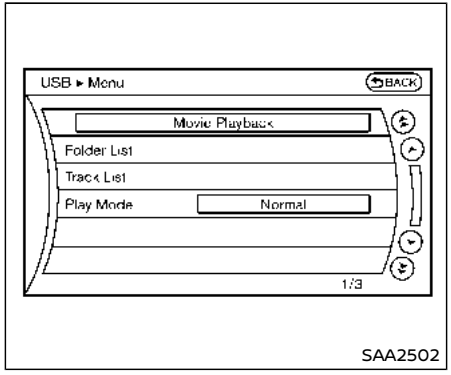


**Menu:**

There are some options available during playback. Select one of the following options that are displayed on the screen if necessary. Refer to the following information for each item.

- **Movie Playback**
  Switch to the movie playback mode. This item is displayed only when a USB memory contains movie files.
- **Folder List/Track List**
  Displays the folder or track list. The "Movie Playback" key is also displayed in this list screen, and enables switching to the movie playback mode.
- **Play Mode**
  Select the preferred play mode.

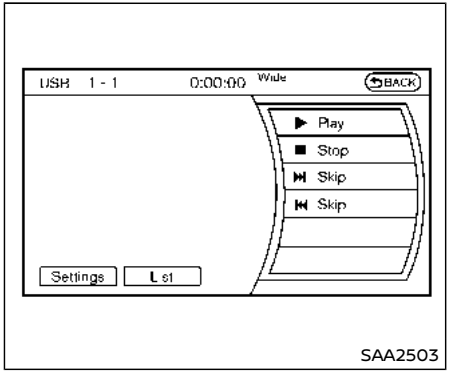


## Movie file operation

**Park the vehicle in a safe location for the front seat occupants to operate the USB memory while watching the images.**

**DISC AUX PLAY:**

When the DISC·AUX button is pushed with the system off and the USB memory inserted, the system will turn on.

If another audio source is playing with an USB memory inserted, push the DISC·AUX button repeatedly until the center display changes to the USB memory mode.

**Operation keys:**

To operate the USB memory, select the desired key displayed on the operation screen using the multi-function controller.

**Pause**

Select the "II" key to pause the movie file. To resume playing the movie file, select the "▶" key.

**Play**

Select the "▶" key to start playing a movie file, for example, after pausing a movie file.

**STOP**

Select the "■" key to stop playing a movie file.

**Skip (Next chapter)**

Select the "▶▶|" key to skip the chapter(s) of the disc forward. The chapters will advance the number of times the ENTER button is pushed.

**Skip (Previous chapter)**

Select the "|◀◀" key to skip the chapter(s) of the disc backward. The chapters will go back the number of times the "|◀◀" key is selected.

**List:**

Select the "List" key on the movie file operation screen to display the file list.

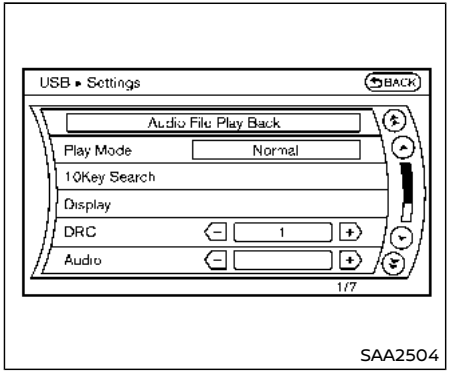


**Example**

**Settings:**

Select the "Settings" key to adjust the following settings.

- **Audio File Playback**
  Switch to the audio playback mode. This item is displayed only when the USB memory contains the audio files.
- **Play Mode**
  Select the "Normal" or "1 Track Repeat" play mode.
- **10 Key Search**
  Select the "10 Key Search" key to open the number entry screen.
  Input the number to be searched and select the "OK" key.
  The specified folder/file will be played.
- **Display**
  To adjust the image quality of the screen, select the preferred adjustment items.
- **DRC**
  DRC (Dynamic Range Compression) automatically adjusts the soundtrack volume level to maintain a more even sound to the speakers.
- **Audio**
  Select the preferred language for audio.
- **Subtitle**
  Select the preferred language for subtitle.
- **Display Mode**
  Select the "Normal", "Wide", "Cinema" or "Full" mode.

## Bluetooth® STREAMING AUDIO (models with navigation system)

Your NISSAN is equipped with Bluetooth® Streaming Audio. If you have a compatible Bluetooth® device with streaming audio (A2DP profile), you can set up the wireless connection between your Bluetooth® device and the in-vehicle audio system. This connection allows you to listen to the audio from the Bluetooth® device using your vehicle speakers. It also may allow basic control of the device for playing and skipping audio files using the AVRCP Bluetooth® profile. All Bluetooth® Devices do not have the same level of controls for AVRCP. Please consult the manual for your Bluetooth® Device for more details.

Once your Bluetooth® device is connected to the in-vehicle audio system, it will automatically reconnect whenever the device is present in the vehicle and you select Bluetooth® Audio from your audio system. You do not need to manually reconnect for each usage.

Wireless LAN (Wi-Fi) and the Bluetooth® functions share the same frequency band (2.4 GHz). Using the Bluetooth® and the wireless LAN functions at the same time may slow down or disconnect the communication and cause undesired noise. It is recommended that you turn off the wireless LAN (Wi-Fi) when using the Bluetooth® functions.

## Regulatory information

**FCC Regulatory information:**

- CAUTION: To maintain compliance with FCC's RF exposure guidelines, use only the supplied antenna. Unauthorized antenna, modification, or attachments could damage the transmitter and may violate FCC regulations.
- Operation is subject to the following two conditions:
  1) This device may not cause interference and
  2) This device must accept any interference, including interference that may cause undesired operation of the device

**IC Regulatory information:**

- Operation is subject to the following two conditions:
  1) This device may not cause interference, and
  2) This device must accept any interference, including interference that may cause undesired operation of the device.
- This Class B digital apparatus meets all requirements of the Canadian Interference-Causing Equipment Regulations.

**Bluetooth® trademark:**

Bluetooth® is a trademark owned by Bluetooth SIG, Inc. and licensed to Clarion Co., Ltd.

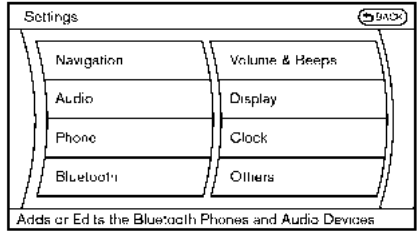


SAA2505

## Connecting procedure

1. Push the SETTING button and select the "Bluetooth" key.

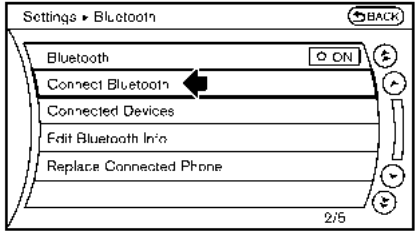


SAA2506

2. Select the “Connect Bluetooth” key.

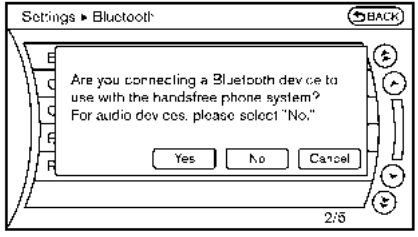


SAA2507

3. A confirmation screen will be displayed. Select “No”.

   Note: Selecting “Yes” will only connect the hands free phone portion of a Bluetooth® device.

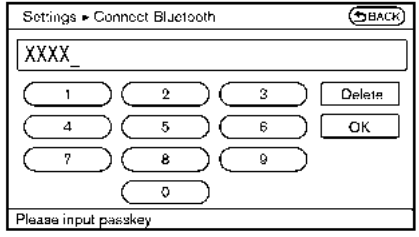


SAA3005

4. Choose a PIN code to use with the compatible Bluetooth® audio device using the number input screen. The PIN code will need to be entered into the Bluetooth® audio device after step 5. Select the “OK” key.

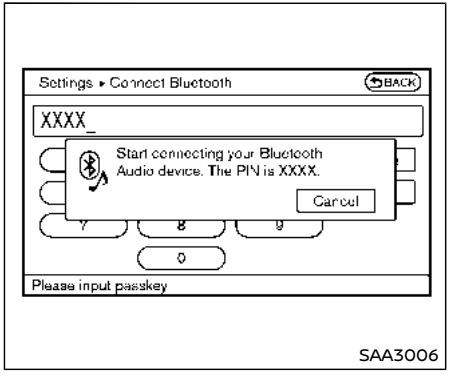


SAA3006

5. The standby message screen will appear. Operate the compatible Bluetooth® audio device. For the connecting procedure of the audio device, see the Bluetooth® audio instructions.

   When the connecting is completed, the screen will return to the Bluetooth® setup display.

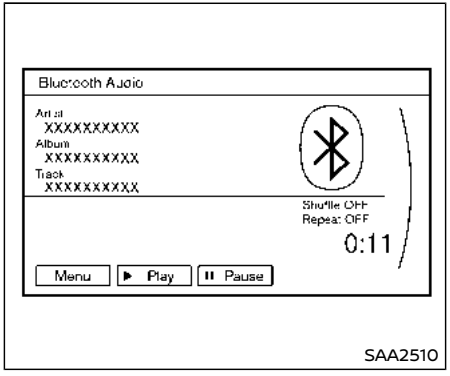


SAA2510

## Audio main operation

Push the ignition switch to the ACC or ON position. Then, push the DISC·AUX button repeatedly to switch to the Bluetooth® audio mode. If the system has been turned off while the Bluetooth® audio device was playing, pushing the ON·OFF/VOL control knob will start the Bluetooth® audio device.

The ability to pause, change tracks, fast forward, rewind, randomize and repeat music may be different between devices. Some or all of these functions may not be supported on each device.

**DISC·AUX button:**

When the DISC·AUX button is pushed with the system off and the Bluetooth® audio device connected, the system will turn on. If another audio source is playing and the Bluetooth® audio device is connected, push the DISC·AUX button repeatedly until the display changes to the Bluetooth® audio mode.

**Next/Previous Track and Fast Forward/Rewind:**

When the ⋯⏭ or ⏮⋯ button is pushed for more than 1.5 seconds while a Bluetooth® audio file is being played, the Bluetooth® audio device will play while forwarding or rewinding. When the button is released, the Bluetooth® audio device will return to normal play speed.

When the ⋯⏭ or ⏮⋯ button is pushed for less than 1.5 seconds while a Bluetooth® audio file is being played, the next track or the beginning of the current track on the Bluetooth® audio device will be played.

When the rewind button is pushed for less than 1.5 seconds within 3 seconds after the current track starts playing, the previous track will be played. Push the button several times to skip through the tracks.

The multi-function controller can also be

used to select tracks when the Bluetooth® audio play mode screen is shown on the display. ("Bluetooth audio" will be indicated on the header of the screen.)

**RPT RDM REPEAT (RPT), RANDOM (RDM):**

To change the play mode, push the RPT RDM button repeatedly and the mode changes as follows.

Normal → Shuffle All Tracks → Shuffle Group → Repeat 1 Track → Repeat All Tracks → Repeat Group → Normal

**Operation keys:**

To operate a Bluetooth® audio device, select a key displayed on the operation screen using the multi-function controller.

**▶ Play**

Select the "▶" key to start playing when pausing. Select this key again to pause the audio play.

**II Pause**

Select the "II" key to pause the Bluetooth® audio device. Select this key again to resume playing.

**Play Mode:**

The play mode setting display will appear when the "Menu" key is selected.

Choose the preferred play mode from the following items.

- **Shuffle**
  Choose "Shuffle OFF", "Shuffle All Tracks" and "Shuffle Group".
- **Repeat**
  Choose from "Repeat OFF", "Repeat 1 Track", "Repeat All Tracks" and "Repeat Group".

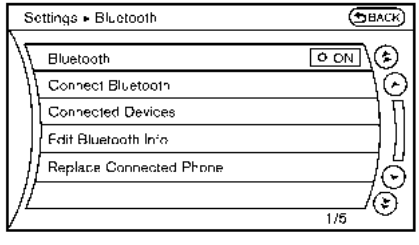

SAA2511

## Bluetooth® settings

To set up the Bluetooth® device system to the preferred settings, push the SETTING button and select the "Bluetooth" key.

**Bluetooth:**

If this setting is turned off, the connection between the Bluetooth® devices and the in-vehicle Bluetooth® module will be canceled.

**Connect Bluetooth:**

Connects to the Bluetooth® device. See "Connecting procedure" (P.4-64). Up to 5 devices can be registered.

**Connected Devices:**

Registered devices are shown on the list. Select a Bluetooth® device from the list, the following options will be available.

- **Select**
  Select "Select" to connect the selected device to the vehicle. If there is a different device currently connected, the selected device will replace the current device.
- **Edit**
  Rename the selected Bluetooth® device using the keypad displayed on the screen. (See "How to use touch screen" (P.4-5).)
- **Delete**
  Delete the selected Bluetooth® device.

**Edit Bluetooth Info:**

Change the name broadcasted by this system over Bluetooth®. Change the PIN code that is entered when connecting a hands free device to this system.

**Replace Connected Phone:**

Replace the Bluetooth® connection with a connected Bluetooth® cellular phone. For details about Hands-Free Phone System, see "Bluetooth® hands-free phone system (models with navigation system)" (P.4-76).

## iPod® PLAYER OPERATION (models with navigation system)

### Connecting iPod®

**WARNING**

**Do not connect, disconnect or operate the USB device while driving. Doing so can be a distraction. If distracted you could lose control of your vehicle and cause an accident or serious injury.**

**CAUTION**

- **Do not force the USB device into the USB connection port. Inserting the USB device tilted or upside-down into the port may damage the port. Make sure that the USB device is connected correctly into the USB connection port.**
- **Do not grab the USB connection port cover (if so equipped) when pulling the USB device out of the port. This could damage the port and the cover.**
- **Do not leave the USB cable in a place where it can be pulled unintentionally. Pulling the cable may damage the port.**

Refer to your device manufacturer's owner information regarding the proper use and care of the device.

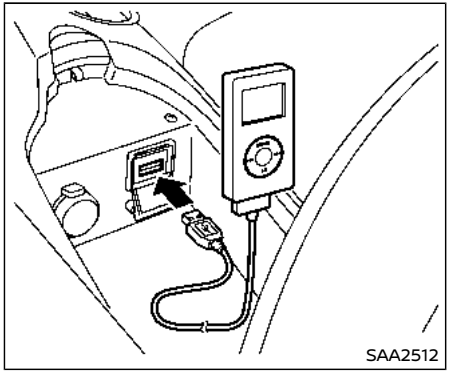


Open the console lid and connect the iPod® cable to the USB connection port. If compatible, the battery of the iPod® is charged while the connection to the vehicle.

Depending on the version of the iPod®, the display on the iPod® shows a NISSAN or Accessory Attached screen when the connection is completed. When the iPod® is connected to the vehicle, the iPod® music library can only be operated by the vehicle audio controls.

## Compatibility

The following models are available:

- Fifth generation iPod® (version 1.2.3 or later)
- iPod Classic® (version 1.1.1 or later)
- First generation iPod touch® (version 2.0.0 or later)
- Second generation iPod touch® (version 1.2.3 or later)
- First generation iPod nano® (version 1.3.1 or later)
- Second generation iPod nano® (version 1.1.3 or later)
- Third generation iPod nano® (version 1.1 or later)
- Fourth generation iPod nano® (version 1.0.2 or later)

Make sure that the iPod® version is updated.

## Audio main operation

Push the ignition switch to the ACC or ON position. Then, push the DISC·AUX button repeatedly to switch to the iPod® mode.

If the system has been turned off while the iPod® was playing, pushing the ON·OFF button will start the iPod®.

**DISC·AUX button:**

When the DISC·AUX button is pushed with the system off and the iPod® connected, the system will turn on. If another audio source is playing and the iPod® is connected, push the DISC·AUX button repeatedly until the center display changes to the iPod® mode.

**Interface:**

The interface for iPod® operation shown on the vehicle center display is similar to the iPod® interface. Use the multi-function controller and the ENTER or BACK button to play the iPod® with your favorite settings.

The following items can be chosen from the menu list screen. For further information about each item, see the iPod® Owner's Manual.

- Now Playing
- Playlists

- Artists
- Albums
- Songs
- Podcasts
- Genres
- Composers
- Audiobooks
- Shuffle Songs
- Play mode

The following touch-panel buttons shown on the screen are also available:

- MENU: returns to the previous screen.
- ▶II : plays/pauses the music selected.

**Next/Previous Track and Fast Forward/Rewind:**

When the ⋯▶▶I or I◀◀⋯ button is pushed for more than 1.5 seconds while the iPod® is playing, the iPod® will play while fast forwarding or rewinding. When the button is released, the iPod® will return to the normal play speed.

When the ⋯▶▶I or I◀◀⋯ button is pushed for less than 1.5 seconds while the iPod® is playing, the next track or the beginning of the current track on the iPod® will be played.

When the rewind button is pushed for less than 1.5 seconds within 3 seconds after the current track starts playing, the previous track will be played.

The multi-function controller can also be used to select tracks when the iPod® is playing.

**RPT RDM REPEAT (RPT), RANDOM (RDM):**

When the RPT button is pushed while a track is being played, the play pattern can be changed as follows:

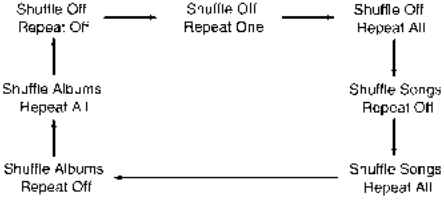


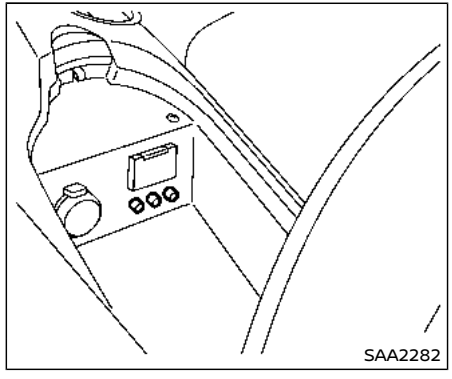


## AUXILIARY INPUT JACKS (models with navigation system)

The auxiliary input jacks are located in the center console. NTSC/PAL compatible devices such as video games, camcorders and portable video players can be connected to the auxiliary jacks. Compatible audio devices, such as some MP3 players, can also be connected to the system through the auxiliary jacks.

The auxiliary jacks are color coded for identification purposes.

- Yellow - video input
- White - left channel audio input

- Red - right channel audio input

Before connecting a device to a jack, turn off the power of the portable device.

With a compatible device connected to the jacks, push the DISC·AUX button repeatedly until the display switches to the AUX mode. The output from the device will be played through the monitor and audio system.

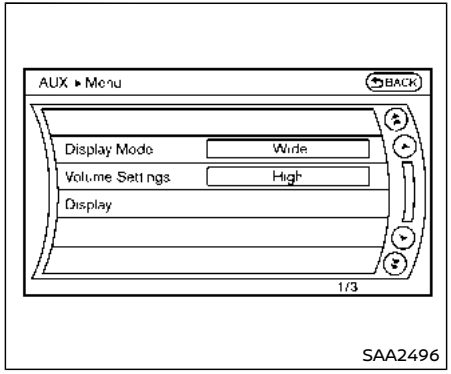


## AUX Menu

When the "Menu" key on the display is selected while in the AUX mode, the menu screen will be displayed.

**Display Mode:**

Choose the display mode from the following items.

- Normal
- Wide
- Cinema

**Volume Settings:**

Choose the volume setting from the following items.

- Low
- Medium
- High

**Display:**

Adjust the image quality of the screen, select the preferred adjustment items.

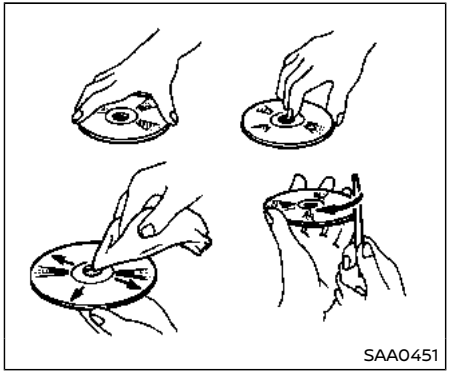


## CD/DVD/USB MEMORY CARE AND CLEANING

### CD/DVD

- Handle a CD/DVD by its edges. Never touch the surface of the disc. Do not bend the disc.
- Always place the discs in the storage case when they are not being used.
- To clean a disc, wipe the surface from the center to the outer edge using a clean, soft cloth. Do not wipe the disc using a circular motion.

  Do not use a conventional record cleaner or alcohol intended for industrial use.
- A new disc may be rough on the inner and outer edges. Remove the rough edges by rubbing the inner and outer edges with the side of a pen or pencil as illustrated.

### USB memory

- Do not touch the terminal portion of the USB memory.
- Do not place heavy objects on the USB memory.
- Do not store the USB memory in highly humid locations.
- Do not expose the USB memory to direct sunlight.
- Do not spill any liquids on the USB memory.

Refer to the USB memory Owner's Manual for the details.

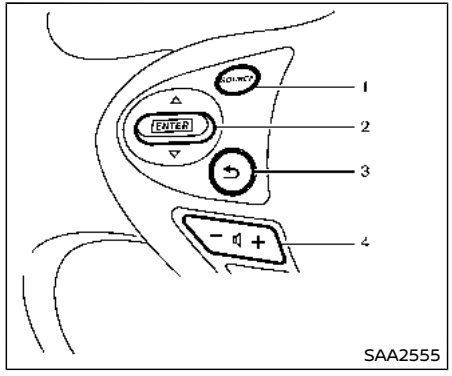


**With navigation system**

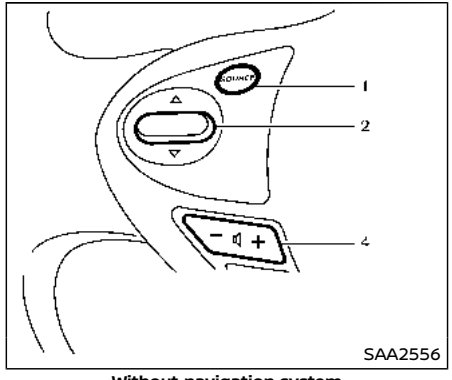


**Without navigation system**

1. Audio source switch
2. Menu control switch (models with navigation system) or audio tuning switch (models without navigation system)
3. Back switch
4. Volume control switch

## STEERING-WHEEL-MOUNTED CONTROLS FOR AUDIO

### Menu control switch (models with navigation system) or audio tuning switch (models without navigation system)

While the display is showing a MAP (navigation systems only), STATUS or Audio screen, tilt the switch upward or downward to select a station, track, CD or folder. For most audio sources, tilting the switch up/down for more than 1.5 seconds provides a different function than tilting up/down for less than 1.5 seconds.

**AM and FM radio:**

- Tilting up/down for less than 1.5 seconds will scroll up or down through the preset station.
- Tilting up/down for more than 1.5 seconds will seek up or down to the next station.
- Pushing the menu control switch will show the list of preset stations.

**SiriusXM Satellite Radio (if so equipped):**

- Tilting up/down for less than 1.5 seconds will scroll up or down through the preset channel.
- Tilting up/down for more than 1.5 seconds will go to the next or previous category.
- Pushing the menu control switch will show the XM menu.

**iPod® (models with navigation system):**

- Tilting up/down for less than 1.5 seconds will scroll up or down through the track number.
- Pushing the menu control switch will show the iPod® menu.

**CD:**

- Tilting up/down for less than 1.5 seconds will scroll up or down through the track number.
- Tilting up/down for more than 1.5 seconds will scroll up or down through the folder number (if playing compressed audio files).
- Pushing the menu control switch will show the CD menu.

**DVD (models with navigation system):**

- Tilting up/down for less than 1.5 seconds will scroll up or down through the track number.
- Tilting up/down for more than 1.5 seconds will scroll up or down through the title number.
- Pushing the menu control switch will select an item from the DVD display.
- When the transparent operation menu appears, the switch will control the menu.

**USB (models with navigation system):**

- Tilting up/down for less than 1.5 seconds will scroll up or down through the track number.
- Tilting up/down for more than 1.5 seconds will scroll up or down through the folder number.
- Pushing the menu control switch will show the USB menu.

**Bluetooth® Audio (models with navigation system):**

- Tilting up/down for less than 1.5 seconds will scroll up or down through the track number.

**AUX:**

- Pushing the menu control switch will show the AUX menu.

### BACK switch (models with navigation system)

Push this switch to go back to the previous screen or cancel the selection if it is not completed.

### Volume control switches

Push the upper (+) or lower (–) side switch to increase or decrease the volume.

### Audio source switch

Push the audio source switch to change the mode to available audio source.

## ANTENNA

### Window antenna (for Coupe models)

The antenna pattern is printed inside the rear window.

**CAUTION**

- **Do not place metalized film near the rear window glass or attach any metal parts to it. This may cause poor reception or noise.**
- **When cleaning the inside of the rear window, be careful not to scratch or damage the rear window antenna. Lightly wipe along the antenna with a dampened soft cloth.**

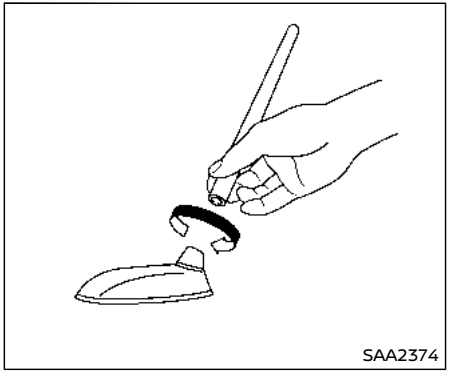


### Trunk mounted antenna (for Roadster models)

**Removing the antenna:**

You can remove the antenna if necessary.

Hold the bottom of the antenna and remove by turning counterclockwise.

To install the antenna, turn the antenna clockwise and tighten.

**CAUTION**

- **To avoid damaging or deforming the antenna, be sure to remove the antenna under the following**

conditions.

— The vehicle enters an automatic car wash.

— The vehicle enters a garage with a low ceiling.

— The vehicle is covered with a car cover.

- Always properly tighten the antenna rod during installation. Otherwise, the antenna rod may break during vehicle operation.

## CAR PHONE OR CB RADIO

When installing a car phone or a CB radio in your vehicle, be sure to observe the following cautions, otherwise the new equipment may adversely affect the electronic control modules and electronic control system harness.

### WARNING

- A cellular phone should not be used for any purpose while driving so full attention may be given to vehicle operation. Some jurisdictions prohibit the use of cellular phones while driving.
- If you must make a call while your vehicle is in motion, the hands-free cellular phone operational mode (if so equipped) is highly recommended. Exercise extreme caution at all times so full attention may be given to vehicle operation.
- If a conversation in a moving vehicle requires you to take notes, pull off the road to a safe location and stop your vehicle before doing so.

### CAUTION

- Keep the antenna as far away as possible from the electronic control modules.
- Keep the antenna wire more than 8 in (20 cm) away from the electronic control system harness. Do not route the antenna wire next to any harness.
- Adjust the antenna standing-wave ratio as recommended by the manufacturer.
- Connect the ground wire from the CB radio chassis to the body.
- For details, it is recommended you visit a NISSAN dealer.

**WARNING**

- **Use a phone after stopping your vehicle in a safe location. If you have to use a phone while driving, exercise extreme caution at all times so full attention may be given to vehicle operation.**
- **If you find yourself unable to devote full attention to vehicle operation while talking on the phone, pull off the road to a safe location and stop your vehicle before doing so.**

**CAUTION**

**To avoid draining the vehicle battery, use a phone after starting the engine.**

Your vehicle is equipped with Bluetooth® Hands-Free Phone System. If you are an owner of a compatible Bluetooth® enabled cellular phone, you can set up the wireless connection between your cellular phone and the in-vehicle phone module. With Bluetooth® wireless technology, you can make or receive a telephone call with your cellular phone in your pocket.

Once a cellular phone is connected to the in-vehicle phone module, no phone connecting procedure is required anymore. Your phone is automatically connected with the in-vehicle phone module when the ignition switch is pushed to the ON position with the registered cellular phone turned on and carried in the vehicle.

You can register up to 5 different Bluetooth® cellular phones in the in-vehicle phone module. However, you can talk on only one cellular phone at a time.

The NISSAN Voice Recognition system supports the phone commands, so dialing a phone number using your voice is possible. For more details, see "NISSAN Voice Recognition System (models with navigation system)" (P.4-99).

Before using the Bluetooth® Hands-Free Phone System, refer to the following notes.

- Wireless LAN (Wi-Fi) and the Bluetooth® functions share the same frequency band (2.4 GHz). Using the Bluetooth® and the wireless LAN functions at the same time may slow down or disconnect the communication and cause undesired noise. It is recommended that you turn off the wireless LAN (Wi-Fi) when using the Bluetooth® functions.
- Set up the wireless connection between a compatible cellular phone and the in-vehicle phone module before using the Bluetooth® Hands-Free Phone System.
- Some Bluetooth® enabled cellular phones may not be recognized by the in-vehicle phone module. Please visit

  www.nissanusa.com/bluetooth for a recommended phone list.
- You will not be able to use a hands-free phone under the following conditions:
  - Your vehicle is outside of the telephone service area.
  - Your vehicle is in an area where it is difficult to receive radio waves; such as in a tunnel, in an underground parking garage, behind a tall building or in a mountainous area.
  - Your cellular phone is locked in order not to be dialed.
- When the radio wave condition is not ideal or ambient sound is too loud, it may be difficult to hear the other person's voice during a call.

- Immediately after the ignition switch is pushed to the ON position, it may be impossible to receive a call for a short period of time.
- Do not place the cellular phone in an area surrounded by metal or far away from the in-vehicle phone module to prevent tone quality degradation and wireless connection disruption.
- While a cellular phone is connected through the Bluetooth® wireless connection, the battery power of the cellular phone may discharge quicker than usual.
- If the Bluetooth® Hands-Free Phone System seems to be malfunctioning, please visit www.nissanusa.com/bluetooth for troubleshooting help.
- Some cellular phones or other devices may cause interference or a buzzing noise to come from the audio system speakers. Storing the device in a different location may reduce or eliminate the noise.
- Refer to the cellular phone Owner's Manual regarding the telephone pairing procedure specific to your phone, battery charging, cellular phone antenna, etc.
- The antenna display on the monitor will not coincide with the antenna display of some cellular phones.
- Keep the interior of the vehicle as quiet as possible to hear the caller's voice clearly as well as to minimize its echoes.
- If reception between callers is unclear, adjusting the incoming or outgoing call volume may improve the clarity.

## REGULATORY INFORMATION

### FCC Regulatory information

- CAUTION: To maintain compliance with FCC's RF exposure guidelines, use only the supplied antenna. Unauthorized antenna, modification, or attachments could damage the transmitter and may violate FCC regulations.
- Operation is subject to the following two conditions:

1. this device may not cause interference and
2. this device must accept any interference, including interference that may cause undesired operation of the device

### IC Regulatory information

- Operation is subject to the following two conditions: (1) this device may not cause interference, and (2) this device must accept any interference, including interference that may cause undesired operation of the device.
- This Class B digital apparatus meets all requirements of the Canadian Interference-Causing Equipment Regulations.

### Bluetooth® trademark

Bluetooth® is a trademark owned by Bluetooth SIG, Inc., and licensed to Clarion Co., Ltd.

## VOICE COMMANDS

You can use voice commands to operate various Bluetooth® Hands-Free Phone System features using the NISSAN Voice Recognition system.

For more details, see "NISSAN Voice Recognition System (models with navigation system)" (P.4-99).

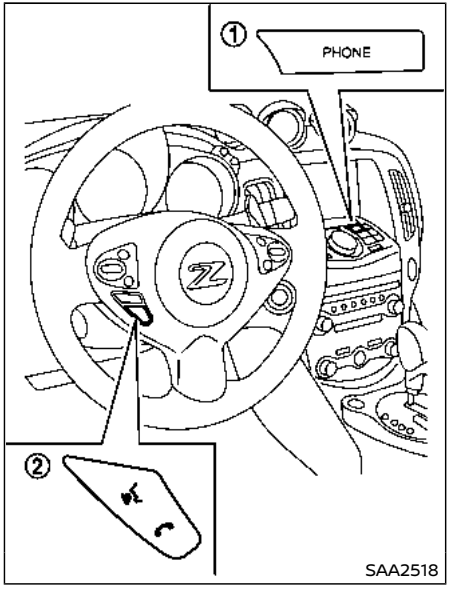


CONTROL BUTTONS

1) PHONE button
2) TALK /PHONE SEND button

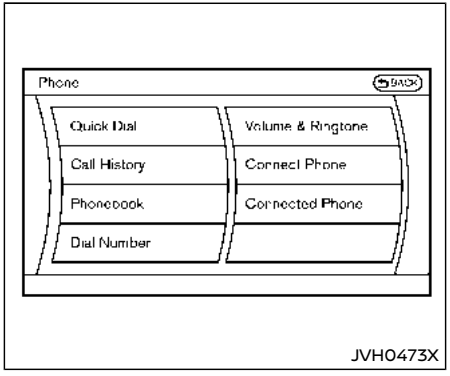


CONNECTING PROCEDURE

1. Push the PHONE button or the button, and select the "Connect Phone" key.

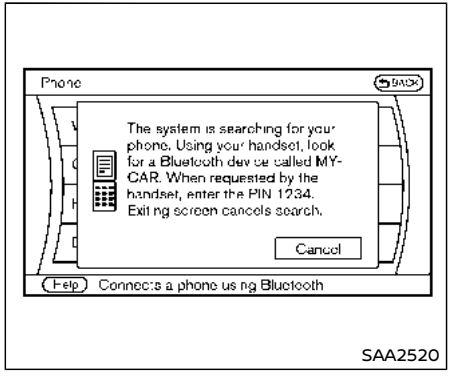


2. A message screen is displayed. Operate the cellular phone according to the message, and then wait until "MY-CAR" is displayed on the cellular phone. After selecting "MY-CAR" on your cellular phone, perform one of the following procedures.
   - Input the PIN code displayed on the screen.
   - Check that the PIN code displayed on the screen is the same as the number displayed on the cellular phone, and then select [Yes].

     For phones that support Simple Secure Pairing (SSP), check that the PIN code on the vehicle displayed matches the PIN code dis-

played on the phone.

The connecting procedure of the cellular phone varies according to each cellular phone. See the cellular phone Owner's Manual for the details. You can also visit

www.nissanusa.com/bluetooth or call NISSAN Consumer Affairs Department for instructions on pairing NISSAN recommended cellular phones.

When the connection process is completed, the screen will return to the Phone menu display.

## PHONE SELECTION

Up to 5 cellular phones can be registered to the system. To switch to connect another cellular phone, push PHONE button and select the "Connected Phones" key. The registered cellular phones are shown on the list. If you select a cellular phone that is different from the one currently connected, the newly selected phone will be connected to the system.

## QUICK DIAL

This vehicle has two phonebooks available for hands-free use. Depending on the phone, the system may automatically download the entire cell phone's phonebook into the " Phonebook". For the details about downloading a phonebook, see "Phone setting" (P.4-84). If a phonebook does not automatically download, the Quick Dial may be set for up to 1.000 entries. This Quick Dial allows the recording of a name to speak while using voice recognition.

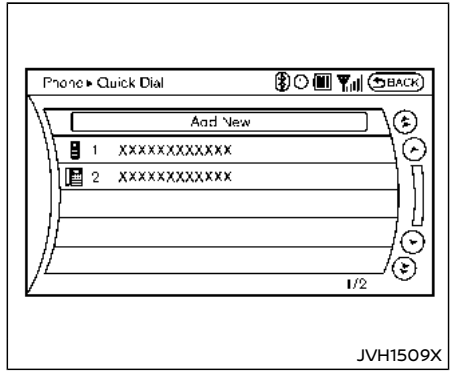


1. Push the PHONE button and select the "Quick Dial" key.
2. Select the "Add New" key at the top of the screen.

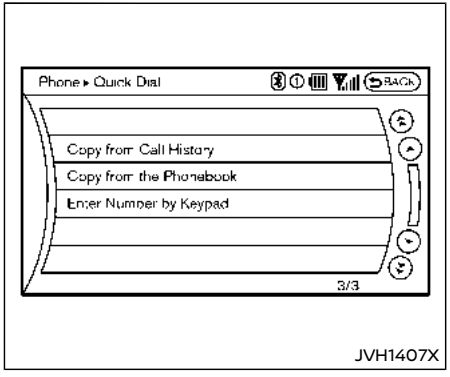

JVH1407X

3. Choose the method for entering the Quick Dial entry. For this example, select “Enter Number by Keypad”.
4. Input the name and phone number manually using the keypad displayed on the screen. (See “How to use touch screen” (P.4-5).)

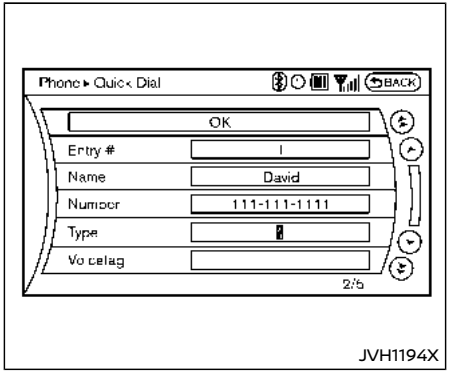

JVH1194X

5. Select the “Voicetag” key to record a name to speak when using the NISSAN Voice Recognition system.
6. Select the “Store” key and prepare to speak the name after the tone.
7. When the voicetag is successfully saved, select the “OK” key to save the Quick Dial entry.
8. After the Quick Dial entry is saved, it will show a screen that is ready to call the number. Push the BACK button to return to the Quick Dial.

There are different methods to input a phone number. Select one of the following options instead of “Enter Number by Keypad” in step 3.

- **Copy from Call History**
  The system will show a list of incoming, outgoing or missed calls that were downloaded from the connected cellular phone (depending on the phone’s compatibility). Select one of these entries to save in the Quick Dial.
- **Copy from the Phonebook**
  The system will show the connected cellular phone’s phonebook that was downloaded (depending on the phone’s compatibility). Select one of these entries to save in the Quick Dial.

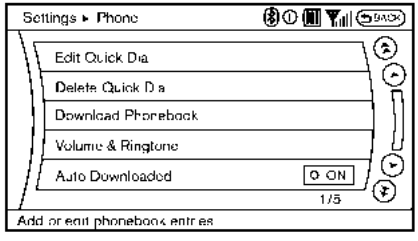


JVH0480X

## Editing the Quick Dial

1. Push the SETTING button and select the "Phone" key.
2. Select the "Edit Quick Dial" key.
3. Select the desired entry from the displayed list.
4. Select the desired item to change.

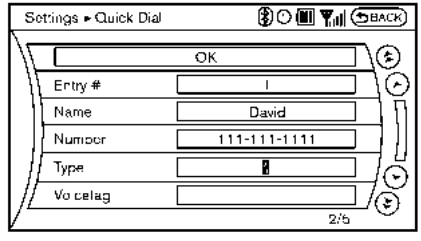


JVH0478X

The following editing items are available:

- Entry #
  Changes the displayed number of the selected entry.
- Name
  Edit the name of the entry using the keypad displayed on the screen.
- Number
  Edit the phone number using the keypad displayed on the screen.
- Type
  Select an icon from the icon list.
- Voicetag
  Confirm and store the voicetag. Voicetags allow easy dialing using the NISSAN Voice Recognition system. (See "NISSAN Voice Recognition System (models with navigation system)" (P.4-99).)

To delete an entry, select the "Delete" key at step 3.

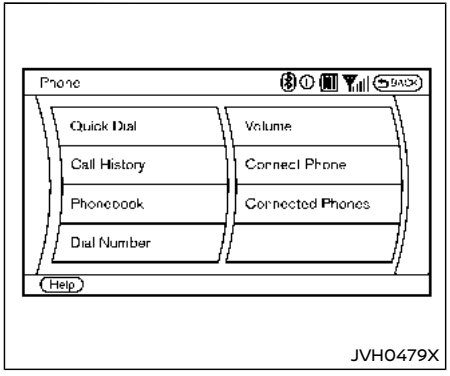

JVH0479X

## MAKING A CALL

To make a call, follow this procedure.

1. Push the PHONE button on the instrument panel or the button on the steering wheel. The "PHONE" screen will appear on the display.
2. Select the "Phonebook" key on the "PHONE" menu.
3. Select the desired entry from the list.
4. Confirm the correct entry by selecting for the correct number from the list.

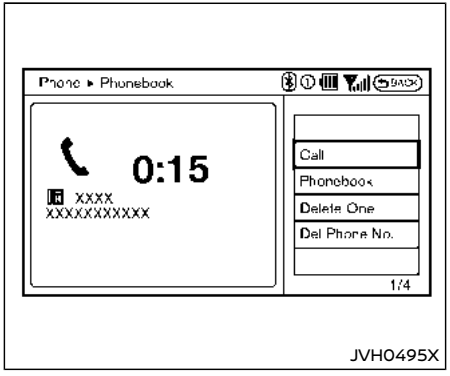

JVH0495X

There are different methods to make a call. Select one of the following options instead of "Phonebook" in step 2 above.

- **Quick Dial**
  Select an entry stored in the Quick Dial.
- **Call History**
  Select an outgoing, incoming or missed call downloaded from your cell phone (depending on your phone's compatibility).
- **Dial Number**
  Input the phone number manually using the keypad displayed on the screen. (See "How to use touch screen" (P.4-5).)

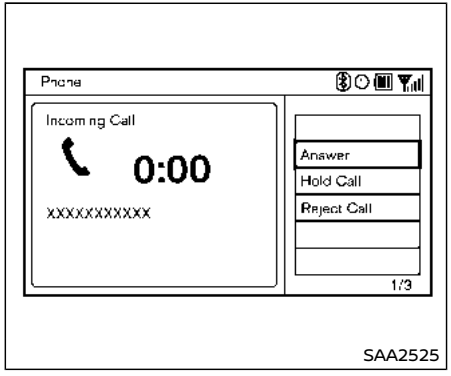

SAA2525

## RECEIVING A CALL

When you hear a phone ring, the display will change to the incoming call mode. To receive a call, perform one of the following procedures listed below.

1. Select the "Answer" key.
2. Push the PHONE button on the instrument panel.
3. Push the button on the steering wheel.

There are some options available when receiving a call. Select one of the following displayed on the screen.

- **Answer**
  Accept an incoming call to talk.

- **Hold Call**
  Put an incoming call on hold.
- **Reject Call**
  Reject an incoming call.
  To finish the call, perform one of the following procedures listed below.

1. Select the “Hang up” key.
2. Push the PHONE button on the instrument panel.
3. Push the button on the steering wheel.

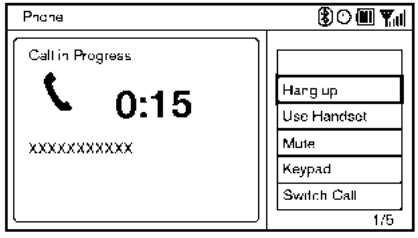

SAA3587

## DURING A CALL

There are some options available during a call. Select one of the following displayed on the screen if necessary.

- **Hang up**
  Finish the call.
- **Use Handset**
  Transfer the call to the cellular phone.
- **Mute**
  Mute your voice to the person.
- **Keypad**
  Using the touch tone, send digits to the connected party for using services such as voicemail.
- **Cancel Mute**
  This will appear after “Mute” is selected. Mute will be canceled.
- **Switch Call***
  Select “Switch Call” to answer another incoming call. By selecting “Hang up”, you can end a call and can speak to a caller who is on hold again.
  * This function may not be usable, depending on the model of phone.

To adjust the person’s voice to be louder or quieter, push the volume control switch (+ or −) on the steering wheel or turn the volume control knob on the instrument panel while talking on the phone. This adjustment is also available in the SETTING mode.

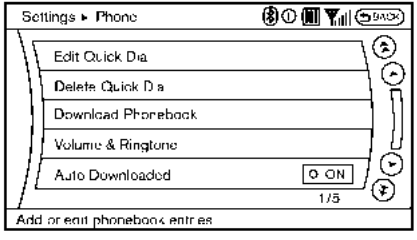

JVH0480X

## PHONE SETTING

To set up the Bluetooth® Hands-Free Phone System to your preferred settings, push the SETTING button on the instrument panel and select the "PHONE" key.

### Edit Quick Dial

To edit the Quick Dial, use the same procedure as described in "Quick Dial" (P.4-79).

### Delete Quick Dial

The Quick Dial entries can be deleted all at the same time or one by one.

### Download Phonebook

Download the contacts registered in a Bluetooth® cellular phone. Availability of this function depends on each cellular phone. The memory downloading procedure from the cellular phone also varies according to each cellular phone. See cellular phone Owner's Manual for details.

### Volume & Ringtone

The following kinds of phone volume can be set. Pushing the PHONE button and selecting the "Volume & Ringtone" key can also operate the same settings.

- **Ringtone/Incoming Call/Outgoing Call**
  To increase or decrease the volume, select the "Ringtone", "Incoming Call" or "Outgoing Call" key and adjust it with the multi-function controller.
- **Automatic Hold**
  When this function is activated, an incoming phone call is automatically held.
- **Vehicle Ringtone**
  When this function is activated, a specific ringtone that is different from the cellular phone will sound when receiving a call.

### Auto Downloaded

When this item is activated, the phonebook of a hands-free phone is automatically downloaded at the same time that the hands-free phone is connected.

## TROUBLESHOOTING GUIDE

The system should respond correctly to all voice commands without difficulty. If problems are encountered, try the following solutions.

Where the solutions are listed by number, try each solution in turn, starting with number 1, until the problem is resolved.

| Symptom | Solution |
|---|---|
| The system fails to interpret the command correctly. | 1. Ensure that the command is valid. (See "NISSAN Voice Recognition System (models with navigation system)" (P.4-99).) |
| | 2. Ensure that the command is spoken after the tone. |
| | 3. Speak clearly without pausing between words and at a level appropriate to the ambient noise level in the vehicle. |
| | 4. Ensure that the ambient noise level is not excessive (for example, windows open or defroster on). NOTE: If it is too noisy to use the phone, it is likely that the voice commands will not be recognized. |
| | 5. If more than one command was said at a time, try saying the commands separately. |
| The system consistently selects the wrong voicetag. | 1. Ensure that the voicetag requested matches what was originally stored. (See "Quick Dial" (P.4-79).) |
| | 2. Replace one of the names being confused with a new name. |
| The system cannot be operated. | Close the soft top (for Roadster models). |

## Bluetooth® HANDS-FREE PHONE SYSTEM (models without navigation system)

**WARNING**

- **Use a phone after stopping your vehicle in a safe location. If you have to use a phone while driving, exercise extreme caution at all times so full attention may be given to vehicle operation.**
- **If you find yourself unable to devote full attention to vehicle operation while talking on the phone, pull off the road to a safe location and stop your vehicle before doing so.**

**CAUTION**

**To avoid draining the vehicle battery, use a phone after starting the engine.**

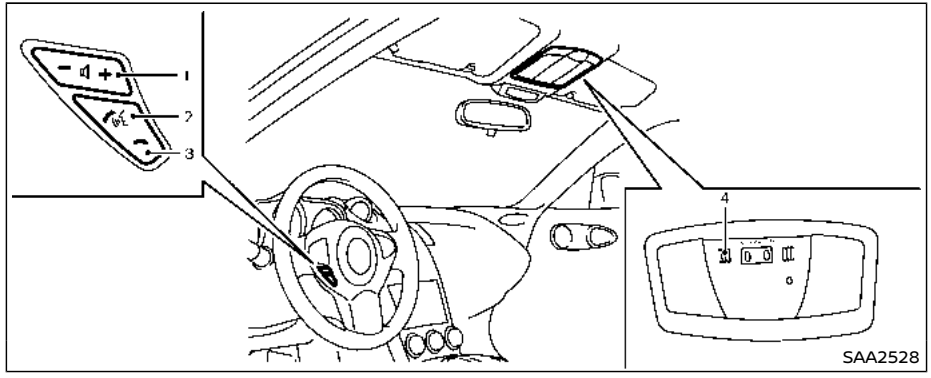


1. Volume control switch –/+
2. PHONE SEND button
3. PHONE END button
4. Microphone

Your vehicle is equipped with the Bluetooth® Hands-Free Phone System. If you have a compatible Bluetooth® enabled cellular phone, you can set up the wireless connection between your cellular phone and the in-vehicle phone module. With Bluetooth® wireless technology, you can make or receive a hands-free telephone call in your vehicle.

Once your cellular phone is connected to the in-vehicle phone module, no other phone connecting procedure is required. Your phone is automatically connected with the in-vehicle phone module when the ignition switch is pushed to the ON position with the connected cellular phone turned on and carried in the vehicle.

You can connect up to 5 different Bluetooth® cellular phones in the in-vehicle phone module. However, you can talk on only one cellular phone at a time.

Before using the Bluetooth® Hands-Free Phone System, refer to the following notes.

- Wireless LAN (Wi-Fi) and the Bluetooth® functions share the same frequency band (2.4 GHz). Using the

Bluetooth® and the wireless LAN functions at the same time may slow down or disconnect the communication and cause undesired noise. It is recommended that you turn off the wireless LAN (Wi-Fi) when using the Bluetooth® functions.

- Set up the wireless connection between a compatible cellular phone and the in-vehicle phone module before using the Bluetooth® Hands-Free Phone System.
- Some Bluetooth® enabled cellular phones may not be recognized by the in-vehicle phone module. Please visit www.nissanusa.com/bluetooth for a recommended phone list and connecting.
- You will not be able to use a hands-free phone under the following conditions:
  - Your vehicle is outside of the telephone service area.
  - Your vehicle is in an area where it is difficult to receive radio waves; such as in a tunnel, in an underground parking garage, near a tall building or in a mountainous area.
  - Your cellular phone is locked to prevent it from being dialed.
- When the radio wave condition is not ideal or ambient sound is too loud, it may be difficult to hear the other person's voice during a call.
- Immediately after the ignition switch is pushed to the ON position, it may be impossible to receive a call for a short period of time.
- Do not place the cellular phone in an area surrounded by metal or far away from the in-vehicle phone module to prevent tone quality degradation and wireless connection disruption.
- While a cellular phone is connected through the Bluetooth® wireless connection, the battery power of the cellular phone may discharge quicker than usual. The Bluetooth® Hands-Free Phone System cannot charge cellular phones.
- If the Bluetooth® Hands-Free Phone System seems to be malfunctioning, it is recommended to contact a NISSAN dealer.
- Some cellular phones or other devices may cause interference or a buzzing noise to come from the audio system speakers. Storing the device in a different location may reduce or eliminate the noise.
- Refer to the cellular phone Owner's Manual regarding battery charging, cellular phone antenna, etc.
- This wireless hands free car kit is based on Bluetooth® technology,
  - Frequency: 2402 MHz - 2480 MHz
  - Output Power: 4.14 dBm E.I.R.P
  - Modulation: FHSS GFSK 8DPSK, π/4DQPSK
  - Number of Channel: 79
  - This wireless equipment can't be used for any services related to safety because there is the possibility of radio interference.

## REGULATORY INFORMATION

### FCC Regulatory information

- CAUTION: To maintain compliance with FCC's RF exposure guidelines, use only the supplied antenna. Unauthorized antenna, modification, or attachments could damage the transmitter and may violate FCC regulations.
- Operation is subject to the following two conditions:

1. this device may not cause interference and
2. this device must accept any interference, including interference that may cause undesired operation of the device

## IC Regulatory information

- Operation is subject to the following two conditions: (1) this device may not cause interference, and (2) this device must accept any interference, including interference that may cause undesired operation of the device.
- This Class B digital apparatus meets all requirements of the Canadian Interference-Causing Equipment Regulations.

## Bluetooth® trademark

Bluetooth® is a trademark owned by Bluetooth SIG, Inc., and licensed to Visteon Corporation.

# USING THE SYSTEM

The NISSAN Voice Recognition system allows hands-free operation of the Bluetooth® Hands-Free Phone System.

If the vehicle is in motion, some commands may not be available so full attention may be given to vehicle operation.

## Initialization

When the ignition switch is pushed to the ON position, NISSAN Voice Recognition is initialized, which may take up to one minute. If the button is pushed before the initialization completes, the system will accept any command.

## Operating tips

To get the best performance out of the NISSAN Voice Recognition system, observe the following:

- Keep the interior of the vehicle as quiet as possible. Close the windows to eliminate surrounding noises (traffic noises, vibration sounds, etc.), which may prevent the system from recognizing voice commands correctly.
- Wait until the tone sounds before speaking a command. Otherwise, the command will not be received properly.
- Start speaking a command within 5 seconds after the tone sounds.
- Speak in a natural voice without pausing between words.

## Giving voice command

To operate NISSAN Voice Recognition, push and release the button located on the steering wheel. After the tone sounds, speak a command.

The command given is picked up by the microphone, and voice feedback is given when the command is accepted.

- If you need to hear the available commands for the current menu again, say “Help” and the system will repeat them.
- If a command is not recognized, the system announces, “Command not recognized. Please say again.” Repeat the command in a clear voice.
- If you want to go back to the previous command, you can say “Go back” or “Correction” anytime the system is waiting for a response.
- You can cancel a command when the system is waiting for a response by saying, “Cancel” or “Quit.” The system announces “Cancel” and ends the VR session. You can also push and hold the button for 5 seconds on the steering wheel at any time to cancel the VR session. Whenever the VR session is cancelled, a double beep is played to indicate you have exited the system.

- If you want to adjust the volume of the voice feedback, push the volume control switch (+ or –) on the steering wheel while being provided with feedback. You can also use the radio volume control knob.

**Voice Prompt Interrupt:**

In most cases you can interrupt the voice feedback to speak the next command by pressing the button on the steering wheel.

**One Shot Call:**

To use the system faster, you may speak the second level commands with the main menu command on the main menu. For example, push the button and after the tone say, "Call Redial." Note: The combined command of Call and (a Name) cannot be used.

## How to say numbers

NISSAN Voice Recognition requires a certain way to speak numbers in voice commands. Refer to the rules and examples below.

- Either "zero" or "oh" can be used for "0".
  Example: 1-800-662-6200
  — "One eight oh oh six six two six two oh oh", or
  — "One eight zero zero six six two six two oh oh"
- Words can be used for the first 4 digits places only.
  Example: 1-800-662-6200
  — "One eight hundred six six two six two oh oh",
  — NOT "One eight hundred six six two sixty two hundred, and
  — NOT "One eight oh oh six six two sixty two hundred.
- Numbers can be spoken in small groups. The system will prompt you to continuing entering digits, if desired.
  Example: 1-800-662-6200
  — "One eight zero zero"
  The system repeats the numbers and prompts you to enter more.
  — "six six two"
  The system repeats the numbers and prompts you to enter more.
  — "six two zero zero"
- You can say "Star" for "*" and "Pound" for "#" at any time in any position of the phone number. (Available only when using the "Special Number" command.)
  Example: 1-555-1212 *123
  — "One five five five one two one two star one two three"
- Say "pound" for "#". Say "star" for "*" (available when using the "Special Number" command and the "Send" command during a call).
- Say "plus" for "+" (available only when using the "Special Number" command).
- Say "pause" for a 2 second pause (available only when storing a phone book number).
  See "Making a call by entering a phone number" (P.4-91) and "List of voice commands" (P.4-92) for more information.

**NOTE:**

**For best results, say phone numbers as single digits.**

The voice command "Help" is available at any time. Please say the "Help" command to get information about how to use the system.

INFO

- If you are controlling the telephone system by voice command for the first time or do not know the appropriate voice command, speak "Help". The system announces the available commands.

- When you speak numbers, you can speak both "zero" or "oh" for "0".

## Manual command selection

Commands can be selected manually. While the commands are displayed on the audio screen, select a command by operating the audio tuning switch, and then push the button. Once a command is manually selected, the voice command function is cancelled. To return to voice command mode, push the button to cancel the current operation, and then perform the first procedure of voice command.

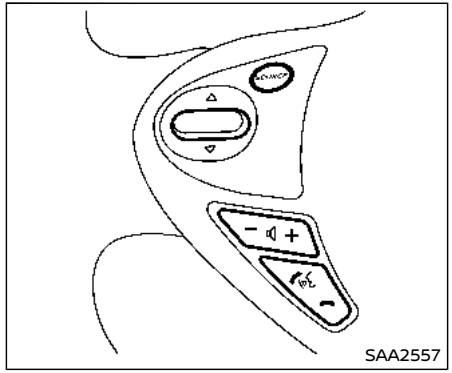


## CONTROL BUTTONS

The control buttons for the Bluetooth® Hands-Free Phone System are located on the steering wheel.

PHONE SEND

Push the button to initiate a VR session or answer an incoming call.

You can also use the button to interrupt system feedback and give a command at once.

PHONE END

While the voice recognition system is active, push the button to go back one step. Push and hold the button for 5 seconds to quit the voice recognition system at any time.

## GETTING STARTED

The following procedures will help you get started using the Bluetooth® Hands-Free Phone System with NISSAN Voice Recognition. For additional command options, refer to "List of voice commands" (P.4-92).

## Choosing a language

You can interact with the Bluetooth® Hands-Free Phone System using English, Spanish or French.

To change the language, perform the following.

1. Push and hold the button for more than 5 seconds.
2. The system announces: "Press the PHONE SEND ( ) button for the hands-free phone system to enter the speaker adaptation mode or press the PHONE END ( ) button to select a different language."
3. Push the button.

   For information on speaker adaptation, see "Speaker Adaptation (SA) mode" (P.4-96).
4. The system announces the current language and gives you the option to change the language to Spanish (in

Spanish) or French (in French). Use the following chart to select the language.

**NOTE:**
**You must push the button or the button within 5 seconds to change the language.**

| Current language | Push (TALK/PHONE SEND) to select | Push (MODE/ PHONE END) to select |
|---|---|---|
| English | Spanish | French |
| Spanish | English | French |
| French | English | Spanish |

5. If you decide not to change the language, do not push either button. After 5 seconds, the VR session will end, and the language will not be changed.

## Connecting procedure

**NOTE:**

**The connecting procedure must be performed when the vehicle is stationary. If the vehicle starts moving during the procedure, the procedure will be cancelled.**

Main menu
"Connect Phone" Ⓐ
"Add Phone" Ⓑ
Initiate from handset Ⓒ
Name phone Ⓓ

1. Push the button on the steering wheel. The system announces the available commands.
2. Say: "Connect Phone" Ⓐ. The system acknowledges the command and announces the next set of available commands.
3. Say: "Add phone" Ⓑ. The system acknowledges the command and asks you to initiate pairing from the phone handset Ⓒ.

   The connecting procedure of the cellular phone varies according to each cellular phone. See the cellular phone Owner's Manual for details. You can also visit www.nissanusa.com/bluetooth for instructions on connecting NISSAN recommended cellular phones.

   When prompted for a Passkey code, enter "1234" from the handset. The Passkey code "1234" has been assigned by NISSAN and cannot be changed.
4. The system asks you to say a name for the phone Ⓓ.

   If the name is too long or too short, the system tells you, then prompts you for a name again.

   Also, if more than one phone is connected and the name sounds too much like a name already used, the system tells you, then prompts you for a name again.

## Making a call by entering a phone number

Main menu
"Call" Ⓐ
"Phone Number" (speak digits) Ⓑ
"Dial" Ⓒ

1. Push the button on steering wheel. A tone will sound.
2. Say: "Call" Ⓐ. The system acknowledges the command and announces the next set of available commands.
3. Say: "Phone Number" Ⓑ. The system acknowledges the command and announces the next set of available commands. Say: "Special Number" to dial more than 10 digits or any special characters.

4. Say the number you wish to call starting with the area code in single digit format. If the system has trouble recognizing the correct phone number, try entering the number in the following groups: 3-digit area code, 3-digit prefix and the last 4-digits. For example, 555-121-3354 can be said as "five five five" as the 1st group, then "one two one" as the 2nd group, and "three three five four" as the 3rd group. For dialing more than 10 digits or any special characters, say "Special Number". See "How to say numbers" (P.4-89), for more information.
5. When you have finished speaking the phone number, the system repeats it back and announces the available commands.
6. Say: "Dial" Ⓒ. The system acknowledges the command and makes the call.

For additional command options, see "List of voice commands" (P.4-92).

## Receiving a call

To receive a call, push the button on the steering wheel when you hear the ring tone.

Once the call has ended, push the button on the steering wheel.

**NOTE:**

**If you do not wish to take the call when you hear the ring tone, push the button on the steering wheel to reject the call.**

## LIST OF VOICE COMMANDS

Main menu
- "Call"
- "Phonebook"
- "Recent Calls"
- "Connect Phone"

When you push and release the button on the steering wheel, you can choose from the commands on the Main Menu. The following pages describe these commands and the commands in each sub-menu.

**Remember to wait for the tone before speaking.**

You can say "Help" to hear the list of commands currently available anytime the system is waiting for a response.

A menu item can also be selected by scrolling the display with the SEEK switch and entering by pushing the button.

If you want to end an action without completing it, you can say "Cancel" or "Quit" at anytime the system is waiting for a response. The system will end the VR session. Whenever the VR session is cancelled, a double beep is played to indicate you have exited the system.

If you want to go back to the previous command, you can say "Go back" or "Correction" anytime the system is waiting for a response.

## Call

Main menu
- "Call"
  - (Speak Name) Ⓐ
  - "Phone Number" (speak digits) Ⓑ
  - "Redial" Ⓒ
  - "Call Back" Ⓓ

**(Speak Name) Ⓐ**

If there are entries stored in the phonebook, a number associated with a name and location can be dialed.

See "Phonebook (phones without automatic phonebook download function)" (P.4-93) to learn how to store entries.

When prompted by the system, say the name of the phonebook entry to call. The system acknowledges the name.

If there are multiple locations associated with the name, the system asks the user to choose the location.

Once the name and location are confirmed, the system begins the call.

**"Phone Number" (speak digits) Ⓑ**

When prompted by the system, say the number to call. Refer to "Making a call by entering a phone number" (P.4-91) for more details.

**"Redial" Ⓒ**

Use the Redial command to call the last number that was dialed.

The system acknowledges the command, repeats the number and begins dialing.

If a redial number does not exist, the system announces, "There is no number to redial" and ends the VR session.

**"Call back" Ⓓ**

Use the Call Back command to dial the number of the last incoming call within the vehicle.

The system acknowledges the command, repeats the number and begins dialing.

If a call back number does not exist, the system announces, "There is no number to call back" and ends the VR session.

**"Special Number"**

To dial more than 10 digits or any special characters, please say "Special Number". When the system acknowledges the command, the system will prompt you to speak the number.

**"During a call"**

During a call there are several command options available. Push the button on the steering wheel to mute the receiving voice and enter commands.

- "Help" — The system announces the available commands.
- "Go back/Correction" — The system announces "Go back," ends the VR session and returns to the call.
- "Cancel/Quit" — The system announces "Cancel," ends the VR session and returns to the call.
- "Send/Enter/Call/Dial" — Use the Send command to enter numbers, "*" or "#" during a call. For example, if you were directed to dial an extension by an automated system:

  Say: "Send one two three four."

  The system acknowledges the command and sends the tones associated with the numbers. The system then ends the VR session and returns to the call. Say "star" for "*", say "pound" for "#".
- "Transfer call" — Use the Transfer Call command to transfer the call from the Bluetooth® Hands-Free Phone System to the cellular phone when privacy is desired.

  The system announces, "Transfer call. Call transferred to privacy mode." The system then ends the VR session.

  To reconnect a call from the cellular phone to the Bluetooth® Hands-Free Phone system, push the button.
- "Mute" — Use the Mute command to mute your voice so the other party cannot hear it. Use the mute command again to unmute your voice.

**NOTE:**

**If a call is ended or the cellular phone network connection is lost while the Mute feature is on, the Mute feature will be reset to "off" for the next call so the other party can hear your voice.**

## Phonebook (phones without automatic phonebook download function)

Main menu
"Phonebook"
Transfer Entry Ⓐ
Delete Entry Ⓑ
List Names Ⓒ

**"Transfer Entry" Ⓐ**

Use the Transfer Entry command to store a new name in the system.

When prompted by the system, say the

name you would like to give the new entry.

For example, say: "Mary."

If the name is too long or too short, the system tells you, then prompts you for a name again.

Also, if the name sounds too much like a name already stored, the system tells you, then prompts you for a name again.

The system will ask you to transfer a phone number stored in the cellular phone's memory.

To enter a phone number by voice command:

For example, say: "five five five one two one two." See "How to say numbers" (P.4-89) for more information.

To transfer a phone number stored in the cellular phone's memory:

Say: "Transfer entry." The system acknowledges the command and asks you to initiate the transfer from the phone handset. The new contact phone number will be transferred from the cellular phone via the Bluetooth® communication link.

The transfer procedure varies according to each cellular phone. See the cellular phone Owner's Manual for details. You can also visit www.nissanusa.com/bluetooth for instructions on transferring phone numbers from NISSAN recommended cellular phones.

The system repeats the number and prompts you for the next command. When you have finished entering numbers or transferring an entry, choose "Store."

The system confirms the name, location and number.

**"Delete Entry"** Ⓑ

Use the Delete Entry command to delete one entry from the phonebook. After the system acknowledges a command, say the name to delete or say "List Names" to choose an entry.

**"List Names"** Ⓒ

Use the List Names command to hear all the names in the phonebook. The system recites the phonebook entries but does not include the actual phone numbers. When playback of the list is complete, the system returns to the main menu.

Playback of the list can be stopped at any time by pushing the button on the steering wheel. The system ends the VR session.

## Phonebook (phones with automatic phonebook download function)

**NOTE:**

**Phonebook commands are not available when the vehicle is moving.**

Main menu
- "List names" Ⓐ
  - "Record Name" Ⓑ
  - "Next Name" Ⓒ
  - "Previous Name" Ⓓ

For phones that support automatic download of the phonebook (PBAP Bluetooth profile), the "Phonebook" command is used to manage entries to the vehicle phonebook. You can say the name of an entry at this menu to initiate dialing of that entry.

The phonebook stores up to 1000 names for each phone paired with the system. Each name can have up to 4 locations/phone numbers associated with it.

When a phone is connected to the system, the phonebook is automatically downloaded to the vehicle. This feature allows you to access your phonebook from the Bluetooth® system and call contacts by name. You can record a

custom voice tag for contact names that the system has difficulty recognizing. For more information see "Record Name" in this section.

**NOTE:**

**Each phone has its own separate phonebook. You cannot access Phone A's phonebook if you are currently connected with Phone B.**

**"List names"** Ⓐ

Use the List Names command to hear all the names and locations in the phone book.

The system recites the phone book entries but does not include the actual phone numbers. When the playback of the list is complete, the system goes back to the main menu.

You can stop the playback of the list at any time by pressing the button on the steering wheel. The system ends the VR session. See the "Record Name" command in this section for information about recording custom voice tags for list entries that the system has difficulty pronouncing.

**"Record name"** Ⓑ

The system allows you to record custom voice tags for contact names in the phonebook that the vehicle has difficulty recognizing. This feature can also be used to record voice tags to directly dial an entry with multiple numbers. Up to 40 voice tags can be recorded to the system.

**"Next Name"** Ⓒ

Use the Next Name command to move the next name of list.

**"Previous Name"** Ⓓ

Use the Previous Name command to move the previous name of list.

## Recent Calls

Main menu
"Recent Calls"
"Outgoing" Ⓐ
"Incoming" Ⓑ
"Missed" Ⓒ
"Call Back" Ⓓ

Use the Recent Calls command to access outgoing, incoming or missed calls.

**"Outgoing"** Ⓐ

Use the Outgoing command to list the outgoing calls made from the vehicle.

**"Incoming"** Ⓑ

Use the Incoming command to list the incoming calls made from the vehicle.

**"Missed"** Ⓒ

Use the Missed command to list the missed calls made to the vehicle that were not answered.

**"Call Back"** Ⓓ

Use the Call Back command to dial the number of the most recently received call.

## Connect Phone

**NOTE:**

**Add Phone command is not available when the vehicle is moving.**

Main menu
"Connect Phone"
"Add Phone" Ⓐ
"Select Phone" Ⓑ
"Delete Phone" Ⓒ
"Bluetooth Off" Ⓓ
"Replace Phone" Ⓔ

Use the Connect Phone commands to manage the phones connecting to the vehicle or to enable the Bluetooth® function on the vehicle.

**"Add Phone"** Ⓐ

Use the Add Phone command to add a phone to the vehicle. See "Connecting procedure" (P.4-91) for more information.

**"Select Phone"** Ⓑ

Use the Select Phone command to select from a list of phones connected to the vehicle. The system will list the names assigned to each phone and then prompt you for the phone you wish to select. Only one phone can be active at a time.

**"Delete Phone"** Ⓒ

Use the Delete Phone command to delete a phone that is connected to the vehicle. The system will list the names assigned to each phone and then prompt you for the phone you wish to delete. Deleting a phone from the vehicle will also delete that phonebook for that phone.

**"Bluetooth Off"** Ⓓ

Use the Bluetooth Off command to prevent a wireless connection to your phone.

**"Replace phone"** Ⓔ

This can be used to reconnect a new phone with the vehicle you have changed your cellular phone.

## SPEAKER ADAPTATION (SA) MODE

Speaker Adaptation allows up to two out-of dialect users to train the system to improve recognition accuracy. By repeating a number of commands, the users can create a voice model of their own voice that is stored in the system. The system is capable of storing a different speaker adaptation model for each connected phone.

### Training procedure

1. Position the vehicle in a reasonably quiet outdoor location.
2. Sit in the driver's seat with the engine running, the parking brake on, and the transmission in Park.
3. Push and hold the button for more than 5 seconds.
4. The system announces: "Press the PHONE SEND ( ) button for the hands-free phone system to enter the speaker adaptation mode or press the PHONE END ( ) button to select a different language."
5. Push the button.

   For information on selecting a different language, see "Choosing a language" (P.4-90).
6. If the connected phone is already in use, the system will prompt you to overwrite. Follow the instructions provided by the system.
7. When preparation is complete and you are ready to begin, push the button.
8. The SA mode will be explained. Follow the instructions provided by the system.
9. When training is finished, the system will tell you an adequate number of phrases have been recorded.
10. The system will announce that speaker adaptation has been completed and the system is ready.

The SA mode will stop if:

- The button is pressed for more than 5 seconds in SA mode.
- The vehicle is driven during SA mode.
- The ignition switch is placed in the OFF or LOCK position.

### Training phrases

During the SA mode, the system instructs you to say the following phrases.

(The system will prompt you for each phrase.)

- phonebook transfer entry
- dial 3 0 4 2 9
- delete call back number
- Incoming
- Transfer entry
- 8 pause 9 3 2 pause 7
- delete all entries
- call 7 2 4 0 9
- phonebook delete entry
- next entry

- dial star 2 1 7 0
- yes
- no
- select
- Missed
- dial 8 5 6 9 2
- Bluetooth on
- Outgoing
- call 3 1 9 0 2
- 9 7 pause pause 3 0 8
- cancel
- call back number
- call star 2 0 9 5
- delete phone
- dial 8 3 0 5 1
- Record Name
- 4 3 pause 2 9 pause 0
- delete redial number
- phonebook list names
- call 8 0 5 4 1
- correction
- setup main menu
- dial 7 4 0 1 8
- memo pad delete
- delete
- dial 9 7 2 6 6
- call 7 6 3 0 1
- go back
- call 5 6 2 8 0
- dial 6 6 4 3 7

## TROUBLESHOOTING GUIDE

The system should respond correctly to all voice commands without difficulty. If problems are encountered, try the following solutions.

Where the solutions are listed by number, try each solution in turn, starting with number 1, until the problem is resolved.

| Symptom | Solution |
|---|---|
| The system fails to interpret the command correctly. | 1. Ensure that the command is valid. See “List of voice commands” (P.4-92). |
| | 2. Ensure that the command is spoken after the tone. |
| | 3. Speak clearly without pausing between words and at a level appropriate to the ambient noise level in the vehicle. |
| | 4. Ensure that the ambient noise level is not excessive (for example, windows open or defroster on). NOTE: If it is too noisy to use the phone, it is likely that the voice commands will not be recognized. |
| | 5. If more than one command was said at a time, try saying the commands separately. |
| | 6. If the system consistently fails to recognize commands, the voice training procedure should be carried out to improve the recognition response for the speaker. See “Speaker Adaptation (SA) mode” (P.4-96). |
| The system consistently selects the wrong entry from the phonebook. | 1. Ensure that the phonebook entry name requested matches what was originally stored. This can be confirmed by using the “List Names” command. See “Phonebook (phones without automatic phonebook download function)” (P.4-93). |
| | 2. Replace one of the names being confused with a new name. |

## NISSAN VOICE RECOGNITION SYSTEM (models with navigation system)

NISSAN Voice Recognition allows hands-free operation of the Phone, Navigation, Information and Audio systems in one of two modes, Standard Mode or Alternate Command Mode.

In Standard Mode, commands that are available are always shown on the display and announced by the system. You can complete your desired operation by simply following the prompts given by the system. (See "NISSAN voice recognition Standard Mode" (P.4-99) for details.)

For advanced operation, you can use the Alternate Command Mode. (See "NISSAN voice recognition Alternate Command Mode" (P.4-110) for details.) When this mode is active, an expanded list of commands can be spoken after pushing the TALK switch, and the voice command menu prompts are turned off. Review the expanded command list, which is available when this mode is active. Note that in this mode the recognition success rate may be affected as the number of available commands and the ways of speaking each command are increased.

To switch one mode to another, see each mode description later in this section.

To improve the recognition success rate when Alternate Command Mode is active, try using the Speaker Adaptation Function available in that mode. Otherwise, it is recommended that Alternate Command Mode be turned off and Standard Mode be used for the best recognition performance.

For the voice commands for the navigation system, refer to the Navigation System Owner's Manual of your vehicle.

For Roadster models:

The voice recognition system cannot be operated when the soft top is not closed.

### NISSAN VOICE RECOGNITION STANDARD MODE

The following section is applicable when the Standard Mode is activated.

The Standard Mode enables you to complete the desired operation by simply following the prompts that appear on the display and also are announced by the system.

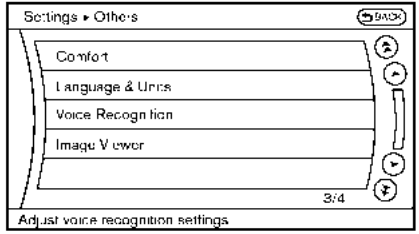


SAA2529

### Activating Standard Mode

When the Alternate Command Mode is active, perform the following steps to switch to the Standard Mode.

1. Push the SETTING button on the instrument panel.
2. Select the "Others" key.
3. Select the "Voice Recognition" key.

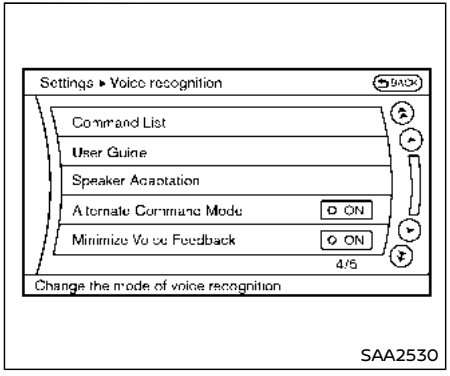

SAA2530

4. Select the “Alternate Command Mode” key.
5. The indicator turns off and the Standard Mode activates.

## Displaying user guide

If you use the NISSAN Voice Recognition system for the first time or you do not know how to operate it, you can display the User Guide for confirmation.

You can confirm how to use voice commands by accessing a simplified User Guide, which contains basic instructions and tutorials for several voice commands.

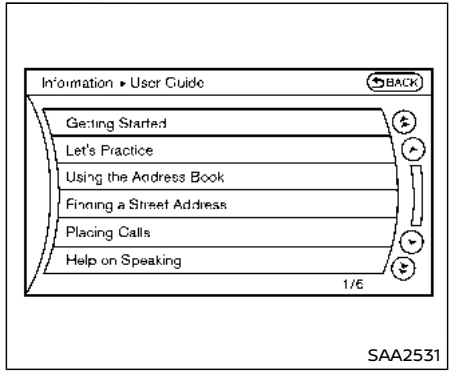

SAA2531

1. Push the INFO button on the instrument panel.
2. Select the “Others” key.
3. Select the “Voice Recognition” key.
4. Select the “User Guide” key.
5. Select a preferred item.

You can skip steps 1 and 3 above if you say “Help”.

**Available items:**

- Getting Started
  Describes the basics of how to operate the NISSAN Voice Recognition system.
- Let’s Practice
  Mode that allows practicing by following the instructions of the system voice.
- Using the Address Book
  Tutorial for entering a destination by using the Address Book.
- Finding a Street Address (if so equipped)
  Tutorial for entering a destination by street address.
- Placing Calls
  Tutorial for making a phone call by voice command operation.
- Help on Speaking
  Displays useful tips of speaking for correct command recognition by the system.

Note that the Command List feature is only available when Alternate Command Mode is active.

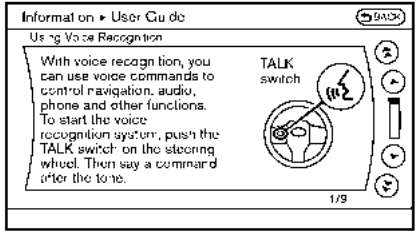


SAA2532

## Getting Started

Before using the NISSAN Voice Recognition system for the first time, you can confirm how to use commands by viewing the Getting Started section of the User Guide.

1. Select the “Getting Started” key.
2. You can confirm the page by scrolling the screen using the multi-function controller.

**Tutorials on the operation of the NISSAN Voice Recognition system**

If you choose “Using the Address Book”, “Finding a Street Address” or “Placing Calls”, you can view tutorials on how to perform these operations using NISSAN Voice Recognition.

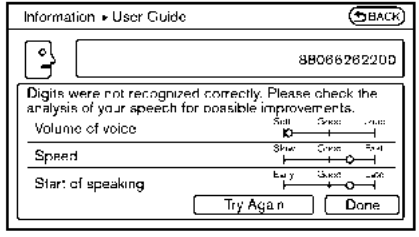


SAA2534

## Let’s Practice

This mode helps learn how to use the NISSAN Voice Recognition system.

1. Select the “Let’s Practice” key.
2. After the message screen appears, push the TALK switch on the steering wheel.
3. Speak the displayed number after the tone. The evaluation screen will be displayed and the result can be confirmed.

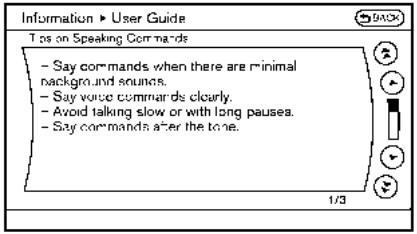


SAA2533

## Useful tips for correct operation

You can display useful speaking tips to help the system recognize your voice commands correctly.

Select “Help on Speaking” to start display.

# USING THE SYSTEM

## Initialization

When the ignition switch is pushed to the ON position, NISSAN Voice Recognition is initialized, which may take up to one minute. When completed, the system is ready to accept voice commands. If the TALK switch is pushed before the initialization completes, the display will show the message: “System not ready.” or a beep sounds.

## Before starting

To get the best recognition performance from NISSAN Voice Recognition, observe the following:

- The interior of the vehicle should be as quiet as possible. Close the windows to eliminate the surrounding noises (traffic noise and vibration sounds, etc.), which may prevent the system from correctly recognizing the voice commands.
- Wait until the tone sounds before speaking a command.
- Speak in a natural conversational voice without pausing between words.
- If the air conditioner is set to “Auto”, the fan speed is automatically lowered so that your commands can be recognized more easily.

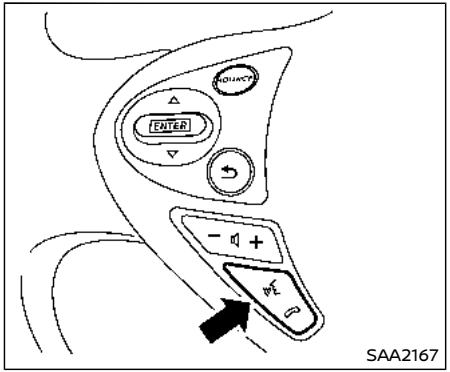


## Giving voice commands

1. Push the TALK switch located on the steering wheel.
2. A list of commands appears on the screen, and you will hear a prompt.
3. After the tone sounds and the icon on the screen changes from to , speak a command.

   Selecting the "Practice" key will start the practice mode. See "Let's Practice" (P.4-101).
4. Continue to follow the voice menu prompts and speak after the tone sounds until your desired operation is completed.

   Selecting the "**Help**" key can display the detailed information of the each command.

**Operating tips:**

- Say a command after the tone.
- Commands that are available are always shown on the display and spoken through voice menu prompts. Commands other than those that are displayed are not accepted. Please follow the prompts given by the system.
- If the command is not recognized, the system announces, "Please say again". Repeat the command in a clear voice.
- Push the BACK button once to return to the previous screen.
- To exit the voice recognition system, push and hold the TALK switch. The message, "Voice canceled" will be announced.

**Voice Prompt Interrupt:**

To skip the voice guidance function and give the command immediately, push the TALK switch to interrupt the system. Remember to speak after the tone.

**How to speak numbers:**

NISSAN Voice Recognition requires a certain way to speak numbers when giving voice commands. Refer to the following examples.

**General rule**

Only single digits 0 (zero) to 9 can be used. (For example, if you would like to say 500, "five zero zero" can be used, but "five hundred" cannot.)

**Examples**

- 1-800-662-6200
  — "One eight zero zero six six two six two zero zero"

**Improving Recognition of Phone numbers**

You can improve the recognition of phone numbers by saying the phone number in three groups of numbers. For example, when you try to call 800-662-6200, say "eight zero zero" first, and the system will then ask you for the next three digits. Then, say "six six two". After recognition, the system will then ask for the last four digits. Say, "six two zero zero". Using this method of phone digit entry can improve recognition performance.

When speaking a house number, speak the number "0" as "zero". If the letter "o (Oh)" is included in the house number, it will not be recognized as the number "0 (zero)" even if you speak "oh" instead of "zero". **Please speak "zero" for the number "0 (zero)", "oh" for the letter "o (oh)"**

**Send digits using dial tone:**

- Push the TALK switch during a phone call.
- The menu will be launched and you will be provided with the following guidance: "Please say the digits to dial".
- After guidance, say the digits of the number you want to send. After this, the digits that have been recognized will be read out.
- If you push the ENTER button on the steering wheel or on the multi-function controller, the selected digits will be sent.

## Command List

**Category Command:**

| Command | Action |
|---|---|
| Call (Optional) | Makes a call to a contact that is stored in either phonebook. Please say "Call" followed by a stored name. |
| Phone | Operates the Phone function |
| Navigation | Operates the Navigation function |
| Information | Displays the vehicle Information function |
| Audio | Operates the Audio function. |
| Help | Displays User Guide |

- Phone Command:

| Command | | Action |
|---|---|---|
| Dial Number | | Makes a call to a spoken phone number up to 10 digits. |
| Quick Dial | | Makes a call to a contact that is stored in the Quick Dial. |
| Phonebook | | Makes a call to a contact that is stored in the mobile phone. |
| Call history | Incoming Calls | Makes a call to the incoming call number. |
| | Outgoing Calls | Makes a call to the dialed number. |
| | Missed Calls | Makes a call to the Missed calls number. |
| International Call | | Makes an international call by allowing more than 10 digits to be spoken. |
| Change Number | | Corrects the recognized phone number (available during phone number entry). |

- Navigation Command:

| Command | Action |
|---|---|
| Destination Home | Sets a route to your home that is stored in the Address Book. |
| Address | Searches for a location by the street address specified, and sets a route to the location. |
| Places | Sets a route to a facility near the current vehicle location. |
| Address Book | Searches for stored information in the Address Book. |

| Command | Action |
|---|---|
| Previous Destinations | Sets a route to a previous destination. |

- Information Command:

| Command | Action |
|---|---|
| Fuel Economy | Displays fuel economy information. |
| Maintenance | Displays maintenance information. |
| Traffic Information | Turns the traffic information system ON and OFF. |
| Where am I? | Displays your current location. |

- Audio Command:

| Command | Action |
|---|---|
| AM | Turns to the AM band, selecting the station last played. |
| FM | Turns to the FM band, selecting the station last played. |
| XM | Turns to the SiriusXM Satellite Radio band, selecting the channel last played. |
| CD | Starts to play a CD. |

- General Commands

| Command | Action |
|---|---|
| Go back | Corrects the last recognition result to return to the previous screen |
| Exit | Cancels Voice Recognition |

## Voice command examples

To use the NISSAN Voice Recognition function, speaking one command is sometimes sufficient, but at other times it is necessary to speak two or more commands. As examples, some additional basic operations by voice commands are described here.

For navigation system commands, see the separate Navigation System Owner's Manual.

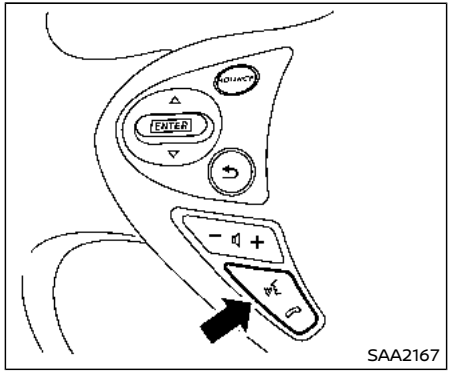


**Example 1 - Placing a call to the phone number 800-662-6200:**

1. Push the TALK switch located on the steering wheel. You will hear a prompt.
2. Speak "Phone".

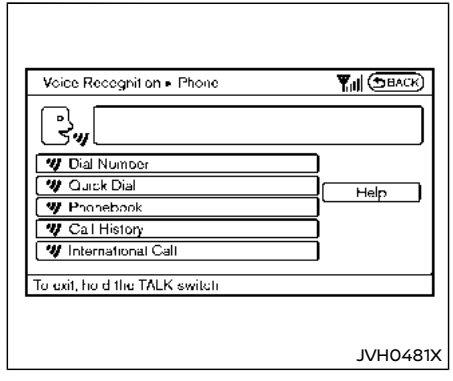


3. Speak "Dial Number".

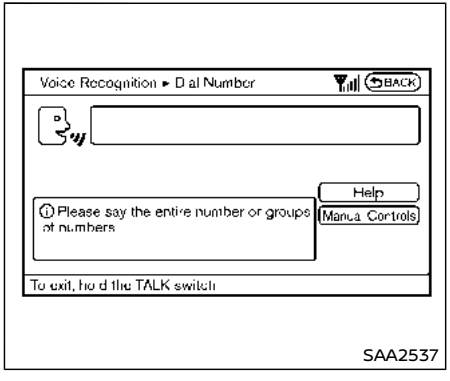

SAA2537

4. Speak “8 0 0”.

   Selecting the “Manual Controls” key switches the screen to the keypad to input the phone number manually.

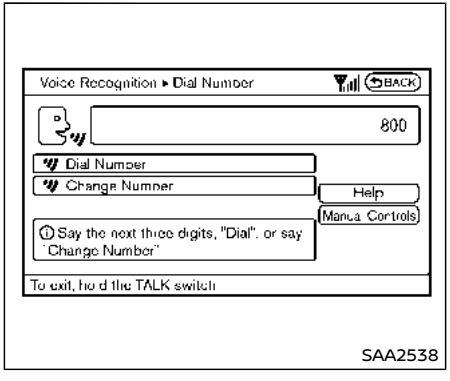

SAA2538

5. The system announces, “Please say the next three digits or dial, or say change number.”
6. Speak “6 6 2”.

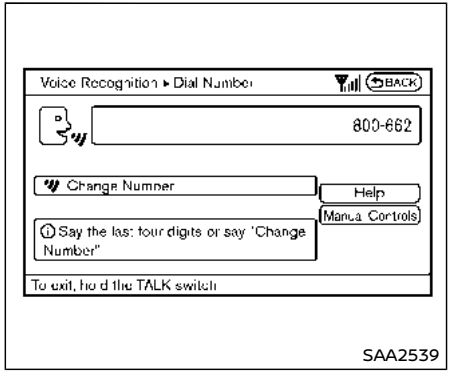

SAA2539

7. The system announces, “Please say the last four digits” or say change number.
8. Speak “6 2 0 0”.

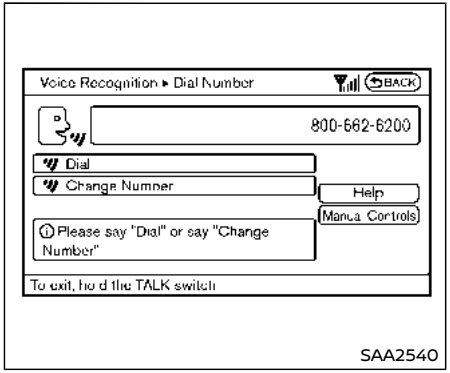


9. The system announces, “Dial or Change Number?”
10. Speak “Dial”.
11. The system makes a call to 800-662-6200.

**Note:**

- You can also speak “800-662-6200” (10 continuous digits) or “662-6200” (7 continuous digits), if the area code is not necessary. However, the 3-3-4 digit grouping is recommended for improved recognition. (See “How to say numbers” (P.4-89).)
- You can only say a phone number using the 3-3-4 grouping, 7 digits, and 10 digits using this command. Please use the “International Call” command for all other formats.
- If you say “Change Number” during phone number entry, the system will automatically request that you repeat the number using the 3-3-4 format. In this case please say the area code first and then follow the prompts.
- Do not add a “1” in front of the area code when speaking phone numbers.
- If the system does not recognize your command, please try repeating the command using a natural voice. Speaking too slow or too loudly may further decrease recognition performance.

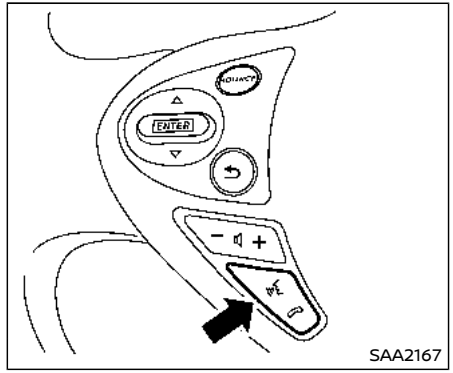


**Example 2 - Placing an international call to the phone number 011-81-111-222-3333:**

1. Push the TALK switch located on the steering wheel. You will hear a prompt.
2. Speak “Phone”.

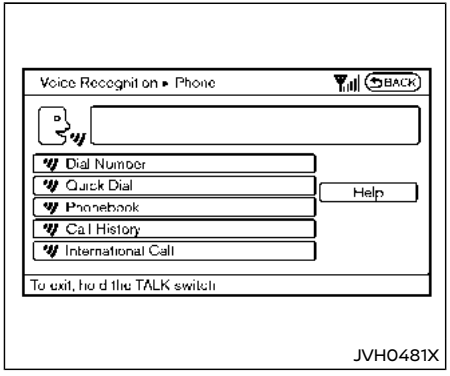


3. Speak “International Call”.

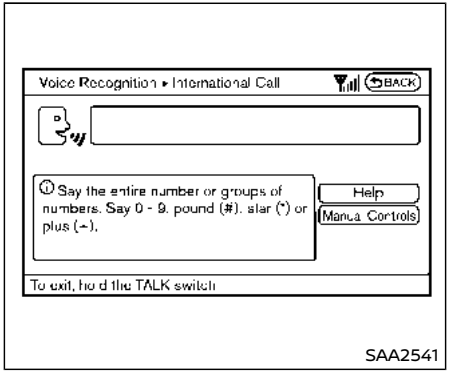


4. Speak “011811112223333”.

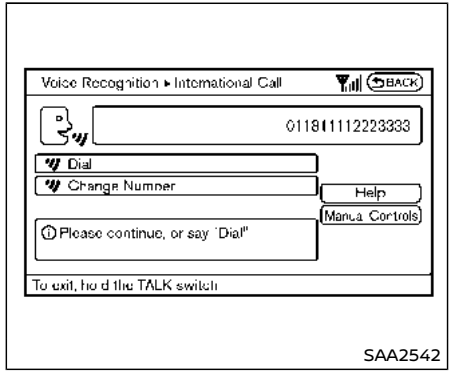


5. Speak “Dial”.
6. System makes a call to 011-81-111-222-3333.

**Note:**

Any digit input format is available in the International Number input process.

## NISSAN VOICE RECOGNITION ALTERNATE COMMAND MODE

The following section is applicable when Alternate Command Mode is activated.

When Alternate Command Mode is activated, an expanded list of commands can be used after pressing the TALK switch. In this mode, available commands are not fully shown on the display or

prompted. Review the expanded command list when this mode is active. See examples of Alternate Command Mode screens.

Please note that in this mode the recognition success rate may be affected as the number of available commands and ways of speaking each command are increased. To improve the recognition success rate, try using the Speaker Adaptation Function available in that mode. (See "Speaker adaptation function (for Alternate Command Mode)" (P.4-121).) Otherwise it is recommended that Alternate Command Mode be turned OFF and Standard Mode be used for the best recognition performance.

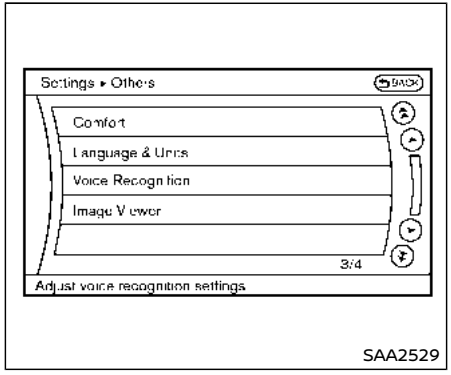

SAA2529

## Activating Alternate Command Mode

When the Standard Mode is active, perform the following steps to switch to the Alternate Command Mode.

1. Push the SETTING button on the instrument panel.
2. Highlight the "Others" key.
3. Highlight the "Voice Recognition" key.

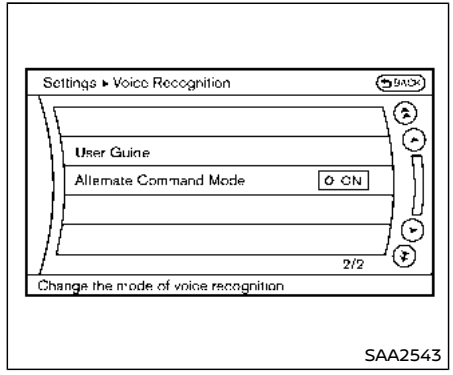

SAA2543

4. Highlight the "Alternate Command Mode" key.
5. The confirmation message is displayed on the screen. Push the "OK" key to activate the Alternate Command Mode.

## Displaying command list

If you are controlling the system by voice commands for the first time or do not know the appropriate voice command, perform the following procedure for displaying the voice command list (available only in Alternate Command Mode).

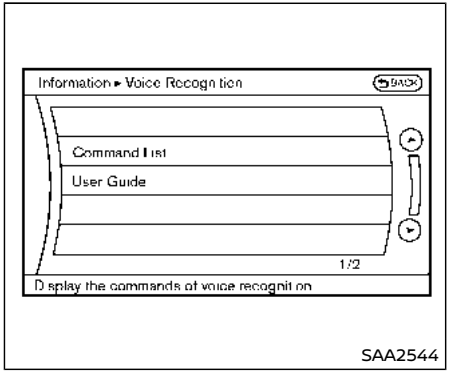

SAA2544

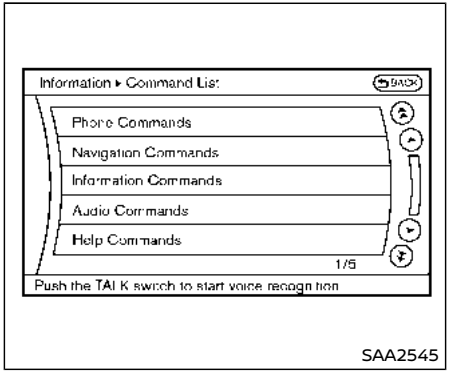

SAA2545

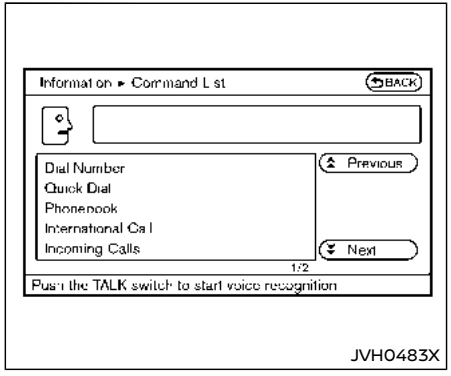

JVH0483X

1. Push the INFO button on the instrument panel.
2. Select the “Others” key.
3. Select the “Voice Recognition” key.
4. Select the “Command List” key.
5. Select a category from the list.
6. Select an item.
7. If necessary, scroll the screen using the multi-function controller to view the entire list.
8. Push the BACK button to return to the previous screen.

## Commands List

**Phone Commands:**

| Command | | Action |
|---|---|---|
| Dial Number | | Makes a call to a spoken phone number. |
| Quick Dial | | Makes a call to a contact that is stored in the Quick Dial. |
| Phonebook | | Makes a call to a contact that is stored in the mobile phone. |
| Call History | Incoming Calls | Makes a call to the incoming call number. |
| | Outgoing Calls | Makes a call to the dialed number. |
| | Missed Calls | Makes a call to the Missed calls number. |
| International Call | | Makes an international call by allowing more than 10 digits to be spoken. |
| Call <name> | | Makes a call to a contact that is stored in either Quick Dial or Phonebook. Please say “Call” followed by a stored name. |
| Change Number | | Corrects the recognized phone number (available during phone number entry). |

**Navigation Commands:**

| Command | Action |
|---|---|
| Destination Home | Sets a route to your home that is stored in the Address Book. |
| Address | Searches for a location by the street address specified, and sets a route to the location. |
| Places | Sets a route to a facility near the current vehicle location. |
| Address Book | Searches for stored information in the Address Book. |
| Previous Destinations | Sets a route to a previous destination. |
| Previous Start Point | Sets a route to a previous starting point. |
| Delete Destination | Deletes a destination. |

**Information Commands:**

| Command | Action |
|---|---|
| Fuel Economy | Displays fuel economy information. |
| Maintenance | Displays maintenance information. |
| Where am I? | Displays your current location. |
| Traffic Information | Turns the traffic information system ON and OFF. |
| Weather Information | Displays weather information. |
| Weather Map | Displays a weather map. |

**Audio Commands:**

| Command | Action |
|---|---|
| CD | Starts to play a CD. |
| FM | Turns to the FM band, selecting the station last played. |
| AM | Turns to the AM band, selecting the station last played. |
| XM | Turns to the SiriusXM Satellite Radio band, selecting the channel last played. |
| USB | Turns on the USB memory. |
| Bluetooth Audio | Turns on the Bluetooth® audio player. |
| AUX | Turns on the AUX. |

**Help Commands:**

| Command | | Action |
|---|---|---|
| Command List | Navigation Commands | Displays the navigation command list. |
| | Phone Commands | Displays the phone command list. |
| | Audio Commands | Displays the audio command list. |
| | Information Commands | Displays the information command list. |
| | Help Commands | Displays the help command list. |
| User Guide | | Displays the User Guide. |
| Speaker Adaptation | | The system can memorize the voices of up to three persons. |

**General Commands:**

| Command | Action |
|---|---|
| Go back | Corrects the last recognition result to return to the previous screen |
| Exit | Cancels Voice Recognition |

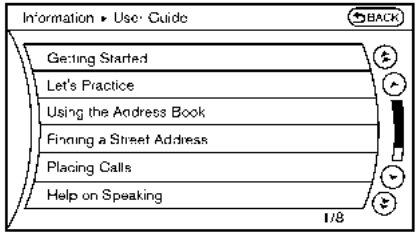

SAA2547

## Displaying user guide

You can confirm how to use voice commands by accessing a simplified User Guide, which contains basic instructions and tutorials for several voice commands.

1. Push the INFO button on the instrument panel.
2. Select the "Others" key using the multifunction controller and push the ENTER button.
3. Highlight the "Voice Recognition" key using the multi-function controller and push the ENTER button.
4. Highlight the "User Guide" key using the multi-function controller and push the ENTER button.
5. Highlight an item using the multi-function controller and push the ENTER button.

**Available items:**

- Getting Started
  Describe the basics of how to operate the NISSAN Voice Recognition system.
- Let's Practice
  Mode that allows practicing by following the instructions of the system voice.
- Using the Address Book
  Refer to Navigation System Owner's Manual.
- Finding a Street Address (if so equipped)
  Refer to Navigation System Owner's Manual.
- Placing Calls
  Tutorial for making a phone call by voice command operation.
- Help on Speaking
  Displays useful tips for how to correctly speak commands in order for them to be properly recognized by the system.
- Voice Recognition Settings
  Describes the available voice recognition settings.
- Adapting the System to Your Voice
  Tutorial adapting the system to your voice.

# USING THE SYSTEM

## Initialization

When the ignition switch is pushed to the ON position, NISSAN Voice Recognition is initialized, which may take up to one minute. When completed, the system is ready to accept voice commands. If the TALK switch is pushed before the initialization completes the display will show the message: "System not ready." or a beep sounds.

## Before starting

To get the best performance from NISSAN Voice Recognition, observe the following.

- Keep the interior of the vehicle as quiet as possible. Close the windows to eliminate the surrounding noises (traffic noises, vibration sounds, etc.), which may prevent the system from recognizing the voice commands correctly.
- When the air conditioner is in the AUTO mode, the fan speed decreases automatically for easy recognition.
- Wait until a tone sounds before speaking a command.

- Speak in a natural voice without pausing between words.

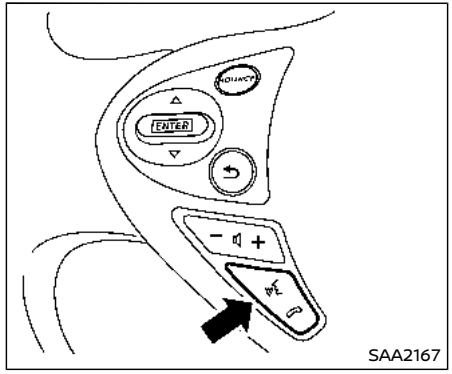


## Giving voice command

1. Push and release the TALK switch located on the steering wheel.
2. A list of commands appears on the screen, and the system announces, “Please say a command”.
3. After the tone sounds and the icon on the screen changes from to , speak a command.

**Operating tips:**

- Voice commands cannot be accepted when the icon is .
- The list displayed can be scrolled by tilting the menu control switch on the steering wheel.
- If the command is not recognized, the system announces, “Please say again”. Repeat the command in a clear voice.
- Push the BACK button once to return to the previous screen.
- If you want to cancel the command, push and hold the TALK switch for 1 second. The message “Voice canceled” will be announced.

**Voice Prompt Interrupt:**

To skip the voice guidance function and give the command immediately, push the TALK switch to interrupt the system. Remember to speak after the tone.

**How to speak numbers:**

NISSAN Voice Recognition requires a certain way to speak numbers when giving voice commands. Refer to the following examples.

**General rule**

Only single digits 0 (zero) to 9 can be used. (For example, if you would like to say 500, “five zero zero” can be used, but “five hundred” cannot.

**Phone numbers**

Speak phone numbers according to the following examples:

- 1-800-662-6200

— “Dial one eight zero zero six six two six two zero zero.”

Note 1: For the best voice recognition phone dialing results, say phone numbers as single digits.

Note 2: You cannot say 555-6000 as “five five five six thousands”.

Note 3: When speaking a house number, speak the number “0” as “zero”. If the letter “o (oh)” is included in the house number, it will not be recognized as the number “0 (zero)” even if you speak “oh” instead of “zero”. Please speak “zero” for the number “0 (zero)”, “oh” for the letter “o (oh)”.

**Send digits using dial tone:**

- Push the TALK switch during a phone call.
- The menu will be launched and you will be provided with the following guidance: "Please say the digits to dial".
- After guidance, say the digits of the number you want to send. After this, the digits that have been recognized will be read out.
- If you push the ENTER button on the steering wheel or on the multi-function controller, the selected digits will be sent.

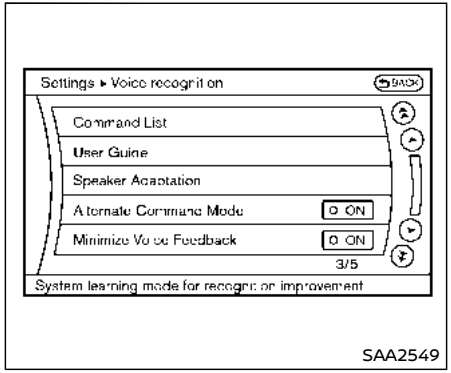


## Speaker adaptation function (for Alternate Command Mode)

The voice recognition system has a function to learn the user’s voice for better voice recognition performance. The system can memorize the voices of up to three persons.

**Having the system learn the user’s voice:**

1. Push the SETTING button on the instrument panel and select the “Others” key.
2. Select the “Voice Recognition” key.
3. Select the “Speaker Adaptation” key.

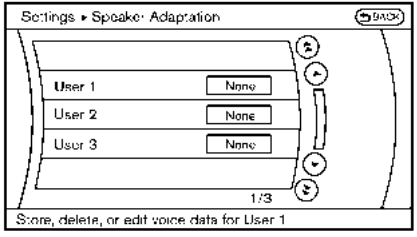


SAA2550

4. Select the user whose voice is memorized by the system.
5. Select the “Start Speaker Adaptation Learning” key.

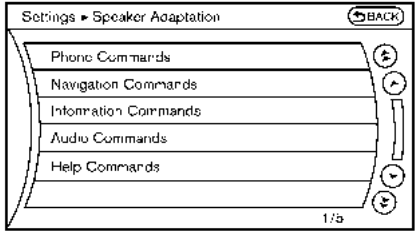


SAA2551

6. Select a category to be learned by the system from the following list.
   - Phone Commands
   - Navigation Commands
   - Information Commands
   - Audio Commands
   - Help Commands

   The voice commands in the category are displayed.
7. Select a voice command and then push the ENTER button.

   The voice recognition system starts.

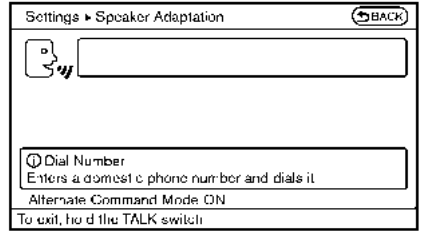


SAA2552

8. The system requests that you repeat a command after a tone.
9. After the tone sounds and the icon on the screen changes from to , speak the command that the system requested.
10. When the system has recognized the voice command, the voice of the user is learned.

Push the switch or BACK button to return to the previous screen.

If the system has learned the command correctly, the voice command status on the right side of the command turns from “None” to “Stored”.

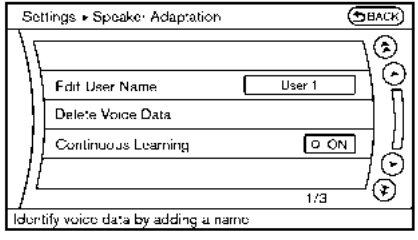

SAA2553

**Speaker Adaptation function settings:**

**Edit User Name**

Edit the user name using the keypad displayed on the screen.

**Delete Voice Data**

Resets the user's voice that the voice recognition system has learned.

**Continuous Learning**

When this item is turned to ON, you can have the system learn the voice commands in succession, without selecting commands one by one.

## Minimize voice feedback (for Alternate Command Mode)

To minimize the voice feedback from the system, perform the following steps.

1. Push the SETTING button on the instrument panel.
2. Select the "Others" key.
3. Select the "Voice Recognition" key.
4. Select the "Minimize Voice Feedback" key.
5. The setting is turned to ON and the voice guidance will now be reduced when using the Voice Recognition system.

## TROUBLESHOOTING GUIDE

The system should respond correctly to all voice commands without difficulty. If problems are encountered, follow the solutions given in this guide for the appropriate error.

Where the solutions are listed by number, try each solution in turn, starting with number one, until the problem is resolved.

| Symptom/error message | Solution |
|---|---|
| The system fails to interpret the command correctly. | 1. Ensure that the command format is valid, see “Command List” (P.4-105). |
| | 2. Speak clearly without pausing between words and at a level appropriate to the ambient noise level. |
| | 3. Ensure that the ambient noise level is not excessive, for example, windows open or defrost on.<br>**NOTE:**<br>**If it is too noisy to use the phone, it is likely that voice commands will not be recognized.** |
| | 4. If optional words of the command have been omitted, then the command should be tried with these in place. |
| The system consistently selects the wrong voicetag in the phonebook. | 1. Ensure that the voicetag requested matches what was originally stored. (See “Bluetooth® hands-free phone system (models with navigation system)” (P.4-76).) |
| | 2. Replace one of the voicetags being confused with a different voicetag. |
| The system cannot be operated. | 1. Make sure that the soft top (for Roadster models) is usable. If the soft top is not working, it is recommended to contact a NISSAN dealer. |
| | 2. Close the soft top (for Roadster models). |
| | 3. Open and close the soft top (for Roadster models) before operating the system. |

# 5 Starting and driving


Precautions when starting and driving ..... 5-2
Exhaust gas (carbon monoxide) ..... 5-2
Three-way catalyst ..... 5-3
Tire Pressure Monitoring System (TPMS) ..... 5-3
Avoiding collision and rollover ..... 5-6
Off-road recovery ..... 5-6
Rapid air pressure loss ..... 5-6
Drinking alcohol/drugs and driving ..... 5-7
Push-button ignition switch ..... 5-8
Operating range for engine start function ..... 5-8
Push-button ignition switch operation ..... 5-9
Push-button ignition switch positions ..... 5-9
Emergency engine shut off ..... 5-10
Intelligent Key battery discharge ..... 5-10
Before starting the engine ..... 5-11
Starting the engine ..... 5-11
Driving the vehicle ..... 5-12
Automatic transmission ..... 5-12
Manual Transmission ..... 5-17
Parking brake ..... 5-21
Cruise control ..... 5-22
Precautions on cruise control ..... 5-22
Cruise control operations ..... 5-23
Break-in schedule ..... 5-24
Fuel efficient driving tips ..... 5-24
Increasing fuel economy ..... 5-25
Parking/parking on hills ..... 5-26
Power steering ..... 5-27
Brake system ..... 5-27
Braking precautions ..... 5-27
Parking brake break-in ..... 5-28
Brake assist ..... 5-28
Brake assist ..... 5-28
Anti-lock Braking System (ABS) ..... 5-28
Vehicle Dynamic Control (VDC) system ..... 5-30
Performance dampers (NISMO models) ..... 5-32
Cold weather driving ..... 5-33
Freeing a frozen door lock ..... 5-33
Antifreeze ..... 5-33
Battery ..... 5-33
Draining of coolant water ..... 5-33
Tire equipment ..... 5-33
Special winter equipment ..... 5-33
Driving on snow or ice ..... 5-33
Engine block heater (if so equipped) ..... 5-34
Active noise cancellation/Active sound enhancement (if so equipped) ..... 5-35
Active noise cancellation ..... 5-35
Active sound enhancement ..... 5-35

**WARNING**

- **Do not leave children or adults who would normally require the support of others alone in your vehicle. Pets should not be left alone either. They could accidentally injure themselves or others through inadvertent operation of the vehicle. Also, on hot, sunny days, temperatures in a closed vehicle could quickly become high enough to cause severe or possibly fatal injuries to people or animals.**
- **Properly secure all cargo to help prevent it from sliding or shifting. Do not place cargo higher than the seatbacks. In a sudden stop or collision, unsecured cargo could cause personal injury (Coupe models).**
- **Closely supervise children when they are around cars to prevent them from playing and becoming locked in the trunk where they could be seriously injured. Keep the car locked with the trunk closed when not in use, and prevent children's access to car keys (Roadster models).**

**If the engine oil temperature is high, the engine protection mode, which helps reduce the chance of engine damage, could activate and automatically decrease engine power. Driving while the engine oil temperature is high may result in engine damage.**

EXHAUST GAS (carbon monoxide)

**WARNING**

- **Do not breathe exhaust gases; they contain colorless and odorless carbon monoxide. Carbon monoxide is dangerous. It can cause unconsciousness or death.**
- **If you suspect that exhaust fumes are entering the vehicle, drive with all windows fully open, and have the vehicle inspected immediately.**
- **Do not run the engine in closed spaces such as a garage.**
- **Do not park the vehicle with the engine running for any extended length of time.**
- **Keep the rear hatch/trunk lid closed while driving, otherwise exhaust gases could be drawn into the passenger compartment. If you must drive with the rear hatch/trunk lid open, follow these precautions:**
  1) **Open all the windows.**
  2) **Set the air recirculation to off and the fan control to high to circulate the air.**
- **The exhaust system and body should be inspected by a qualified mechanic whenever:**
  - **The vehicle is raised for service.**
  - **You suspect that exhaust fumes are entering into the passenger compartment.**
  - **You notice a change in the sound of the exhaust system.**
  - **You have had an accident involving damage to the exhaust system, underbody, or rear of the vehicle.**

## THREE-WAY CATALYST

The three-way catalyst is an emission control device installed in the exhaust system. Exhaust gases in the three-way catalyst are burned at high temperatures to help reduce pollutants.

**WARNING**

- **The exhaust gas and the exhaust system are very hot. Keep people, animals or flammable materials away from the exhaust system components.**
- **Do not stop or park the vehicle over flammable materials such as dry grass, waste paper or rags. They may ignite and cause a fire.**

**CAUTION**

- **Do not use leaded gasoline. Deposits from leaded gasoline seriously reduce the three-way catalyst's ability to help reduce exhaust pollutants.**
- **Keep your engine tuned up. Malfunctions in the ignition, fuel injection, or electrical systems can cause overrich fuel flow into the three-way catalyst, causing it to overheat. Do not keep driving if the engine misfires, or if noticeable loss of performance or other unusual operating conditions are detected. Have the vehicle inspected. It is recommended you visit a NISSAN dealer for this service.**
- **Avoid driving with an extremely low fuel level. Running out of fuel could cause the engine to misfire, damaging the three-way catalyst.**
- **Do not race the engine while warming it up.**
- **Do not push or tow your vehicle to start the engine.**

## TIRE PRESSURE MONITORING SYSTEM (TPMS)

Each tire, including the spare (if provided), should be checked monthly when cold and inflated to the inflation pressure recommended by the vehicle manufacturer on the vehicle placard or tire inflation pressure label. (If your vehicle has tires of a different size than the size indicated on the vehicle placard or tire inflation pressure label, you should determine the proper tire inflation pressure for those tires.)

As an added safety feature, your vehicle has been equipped with a Tire Pressure Monitoring System (TPMS) that illuminates a low tire pressure telltale when one or more of your tires is significantly under-inflated. Accordingly, when the low tire pressure telltale illuminates, you should stop and check your tires as soon as possible, and inflate them to the proper pressure. Driving on a significantly under-inflated tire causes the tire to overheat and can lead to tire failure. Under-inflation also reduces fuel efficiency and tire tread life, and may affect the vehicle's handling and stopping ability.

Please note that the TPMS is not a substitute for proper tire maintenance, and it is the driver's responsibility to maintain correct tire pressure, even if under-inflation has not reached the level to trigger illumination of the TPMS low tire pressure telltale.

Your vehicle has also been equipped with a TPMS malfunction indicator to indicate when the system is not operating properly. The TPMS malfunction indicator is combined with the low tire pressure telltale. When the system detects a malfunction, the telltale will flash for approximately one minute and then re-

main continuously illuminated. This sequence will continue upon subsequent vehicle start-ups as long as the malfunction exists. When the malfunction indicator is illuminated, the system may not be able to detect or signal low tire pressure as intended. TPMS malfunctions may occur for a variety of reasons, including the installation of replacement or alternate tires or wheels on the vehicle that prevent the TPMS from functioning properly. Always check the TPMS malfunction telltale after replacing one or more tires or wheels on your vehicle to ensure that the replacement or alternate tires and wheels allow the TPMS to continue to function properly.

## Additional information

- Since the spare tire is not equipped with the TPMS, the TPMS does not monitor the tire pressure of the spare tire.
- The TPMS will activate only when the vehicle is driven at speeds above 16 MPH (25 km/h). Also, this system may not detect a sudden drop in tire pressure (for example a flat tire while driving).
- The low tire pressure warning light does not automatically turn off when the tire pressure is adjusted. After the tire is inflated to the recommended pressure, the vehicle must be driven at speeds above 16 MPH (25 km/h) to activate the TPMS and turn off the low tire pressure warning light. Use a tire pressure gauge to check the tire pressure.
- The CHECK TIRE PRESSURE warning also appears on the vehicle information display when the low tire pressure warning light is illuminated and low tire pressure is detected. The CHECK TIRE PRESSURE warning turns off when the low tire pressure warning light turns off.

  The CHECK TIRE PRESSURE warning appears each time the ignition switch is placed in the ON position as long as the low tire pressure warning light remains illuminated.

  The CHECK TIRE PRESSURE warning does not appear if the low tire pressure warning light illuminates to indicate a TPMS malfunction.
- Tire pressure rises and falls depending on the heat caused by the vehicle's operation and the outside temperature. Do not reduce the tire pressure after driving because the tire pressure rises after driving. Low outside temperature can lower the temperature of the air inside the tire which can cause a lower tire inflation pressure. This may cause the low tire pressure warning light to illuminate. If the warning light illuminates in low ambient temperature, check the tire pressure for all four tires.

For additional information, see "Low tire pressure warning light" (P.2-13) and "Tire Pressure Monitoring System (TPMS)" (P.6-3).

**WARNING**

- **If the low tire pressure warning light illuminates while driving, avoid sudden steering maneuvers or abrupt braking, reduce vehicle speed, pull off the road to a safe location and stop the vehicle as soon as possible. Driving with under-inflated tires may permanently damage the tires and increase the likelihood of tire failure. Serious vehicle damage could occur and may lead to an accident and could result in serious personal injury. Check the tire pressure for all four tires. Adjust the tire pressure to the recommended COLD tire pressure shown on the Tire and Loading Information label to turn the low tire pressure warning light OFF. If**

**the light still illuminates while driving after adjusting the tire pressure, a tire may be flat or the TPMS may be malfunctioning. If you have a flat tire, replace it with a spare tire (if so equipped) or repair it with the tire puncture repair kit (if so equipped) as soon as possible. If no tire is flat and all tires are properly inflated, it is recommended you consult a NISSAN dealer.**

- **Since the spare tire is not equipped with the TPMS, when a spare tire is mounted or a wheel is replaced, the TPMS will not function and the low tire pressure warning light will flash for approximately 1 minute. The light will remain on after 1 minute. Have your tires replaced and/or TPMS system reset as soon as possible. It is recommended you visit a NISSAN dealer for these services.**
- **Replacing tires with those not originally specified by NISSAN could affect the proper operation of the TPMS.**
- **NISSAN recommends using only Genuine NISSAN Emergency Tire Sealant provided with your vehicle. Other tire sealants may damage the valve stem seal which can cause the tire to lose air pressure. It is recommended you visit a NISSAN dealer as soon as possible after using tire repair sealant (for models equipped with the emergency tire puncture repair kit).**

**CAUTION**

- **The TPMS may not function properly when the wheels are equipped with tire chains or the wheels are buried in snow.**
- **Do not place metalized film or any metal parts (antenna, etc.) on the windows. This may cause poor reception of the signals from the tire pressure sensors, and the TPMS will not function properly.**

Some devices and transmitters may temporarily interfere with the operation of the TPMS and cause the low tire pressure warning light to illuminate. Some examples are:

- Facilities or electric devices using similar radio frequencies are near the vehicle.
- If a transmitter set to similar frequencies is being used in or near the vehicle.
- If a computer (or similar equipment) or a DC/AC converter is being used in or near the vehicle.

Low tire pressure warning light may illuminate in the following cases.

- If the vehicle is equipped with a wheel and tire without TPMS.
- If the TPMS has been replaced and the ID has not been registered.
- If the wheel is not originally specified by NISSAN.

**FCC Notice:**

**For USA:**

**This device complies with Part 15 of the FCC Rules. Operation is subject to the following two conditions: (1) This device may not cause harmful interference, and (2) this device must accept any interference received, including interference that may cause undesired operation.**

**NOTE:**

**Changes or modifications not expressly approved by the party responsible for compliance could void the user's**

**authority to operate the equipment.**

**For Canada:**

**This device complies with Industry Canada licence-exempt RSS standard(s). Operation is subject to the following two conditions: (1) this device may not cause interference, and (2) this device must accept any interference, including interference that may cause undesired operation of the device.**

## AVOIDING COLLISION AND ROLLOVER

**WARNING**

**Failure to operate this vehicle in a safe and prudent manner may result in loss of control or an accident.**

Be alert and drive defensively at all times. Obey all traffic regulations. Avoid excessive speed, high speed cornering, or sudden steering maneuvers, because these driving practices could cause you to lose control of your vehicle. **As with any vehicle, a loss of control could result in a collision with other vehicles or objects, or cause the vehicle to rollover, particularly if the loss of control causes the vehicle to slide sideways.** Be attentive at all times, and avoid driving when tired. Never drive when under the influence of alcohol or drugs (including prescription or over-the-counter drugs which may cause drowsiness). Always wear your seat belt as outlined in the "Seat belts" (P.1-10) of this manual, and also instruct your passengers to do so.

Seat belts help reduce the risk of injury in collisions and rollovers. **In a rollover crash, an unbelted or improperly belted person is significantly more likely to be injured or killed than a person properly wearing a seat belt.**

## OFF-ROAD RECOVERY

While driving, the right side or left side wheels may unintentionally leave the road surface. If this occurs, maintain control of the vehicle by following the procedure below. Please note that this procedure is only a general guide. The vehicle must be driven as appropriate based on the conditions of the vehicle, road and traffic.

1. Remain calm and do not overreact.
2. Do not apply the brakes.
3. Maintain a firm grip on the steering wheel with both hands and try to hold a straight course.
4. When appropriate, slowly release the accelerator pedal to gradually slow the vehicle.
5. If there is nothing in the way, steer the vehicle to follow the road while the vehicle speed is reduced. Do not attempt to drive the vehicle back onto the road surface until vehicle speed is reduced.
6. When it is safe to do so, gradually turn the steering wheel until both tires return to the road surface. When all tires are on the road surface, steer the vehicle to stay in the appropriate driving lane.
   - If you decide that it is not safe to return the vehicle to the road surface based on vehicle, road or traffic conditions, gradually slow the vehicle to a stop in a safe place off the road.

## RAPID AIR PRESSURE LOSS

Rapid air pressure loss or a "blow-out" can occur if the tire is punctured or is damaged due to hitting a curb or pothole. Rapid air pressure loss can also be caused by driving on under-inflated tires.

Rapid air pressure loss can affect the handling and stability of the vehicle, especially at highway speeds.

Help prevent rapid air pressure loss by maintaining the correct air pressure and visually inspect the tires for wear and damage. See "Wheels and tires" (P.8-26) of

this manual.

If a tire rapidly loses air pressure or "blows-out" while driving maintain control of the vehicle by following the procedure below. Please note that this procedure is only a general guide. The vehicle must be driven as appropriate based on the conditions of the vehicle, road and traffic.

**WARNING**

**The following actions can increase the chance of losing control of the vehicle if there is a sudden loss of tire air pressure. Losing control of the vehicle may cause a collision and result in personal injury.**

- **The vehicle generally moves or pulls in the direction of the flat tire.**
- **Do not rapidly apply the brakes.**
- **Do not rapidly release the accelerator pedal.**
- **Do not rapidly turn the steering wheel.**

1. Remain calm and do not overreact.
2. Maintain a firm grip on the steering wheel with both hands and try to hold a straight course.
3. When appropriate, slowly release the accelerator pedal to gradually slow the vehicle.
4. Gradually steer the vehicle to a safe location off the road and away from traffic if possible.
5. Lightly apply the brake pedal to gradually stop the vehicle.
6. Turn on the hazard warning flashers and either contact a roadside emergency service to change the tire or see "Changing a flat tire (for models with spare tire)" (P.6-4) of this Owner's Manual.

## DRINKING ALCOHOL/DRUGS AND DRIVING

**WARNING**

**Never drive under the influence of alcohol or drugs. Alcohol in the bloodstream reduces coordination, delays reaction time and impairs judgement. Driving after drinking alcohol increases the likelihood of being involved in an accident injuring yourself and others. Additionally, if you are injured in an accident, alcohol can increase the severity of the injury.**

NISSAN is committed to safe driving. However, you must choose not to drive under the influence of alcohol. Every year thousands of people are injured or killed in alcohol-related accidents. Although the local laws vary on what is considered to be legally intoxicated, the fact is that alcohol affects all people differently and most people underestimate the effects of alcohol.

Remember, drinking and driving don't mix! And that is true for drugs, too (over-the-counter, prescription, and illegal drugs). Don't drive if your ability to operate your vehicle is impaired by alcohol, drugs, or some other physical condition.

**WARNING**

**Do not operate the push-button ignition switch while driving the vehicle except in an emergency. (The engine will stop when the ignition switch is pushed 3 consecutive times or the ignition switch is pushed and held for more than 2 seconds.) If the engine stops while the vehicle is being driven, this could lead to a crash and serious injury.**

Before operating the push-button ignition switch, be sure to move the shift lever to the P (Park) position (for automatic transmission model) or the shift lever to the N (Neutral) position (for manual transmission model).

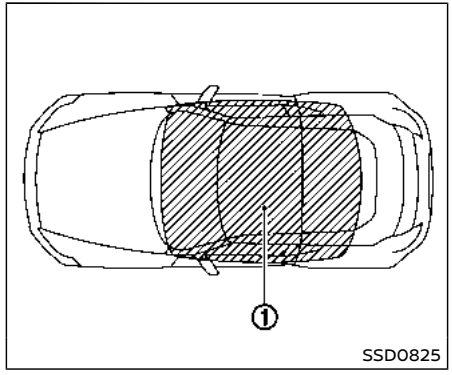


## OPERATING RANGE FOR ENGINE START FUNCTION

The Intelligent Key can only be used for starting the engine when the Intelligent Key is within the specified operating range ①.

When the Intelligent Key battery is almost discharged or strong radio waves are present near the operating location, the Intelligent Key system's operating range becomes narrower and may not function properly.

If the Intelligent Key is within the operating range, it is possible for anyone, even someone who does not carry the Intelligent Key, to push the ignition switch to start the engine.

- The cargo/trunk room area is not included in the operating range but the Intelligent Key may function.
- If the Intelligent Key is placed on the instrument panel, rear parcel shelf, inside the glove box or door pocket, the Intelligent Key may not function.
- If the Intelligent Key is placed near the door or window outside the vehicle, the Intelligent Key may function.

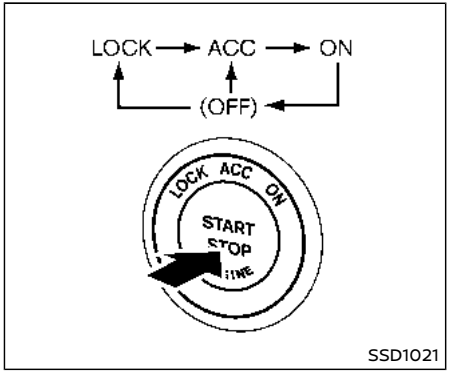


## PUSH-BUTTON IGNITION SWITCH OPERATION

When the ignition switch is pushed without depressing the brake pedal (automatic transmission model) or the clutch pedal (manual transmission model), the ignition switch position will change as follows:

- Push center once to change to ACC.
- Push center two times to change to ON.
- Push center three times to change to OFF. (No position illuminates.)
- Push center four times to return to ACC.
- Open or close any door to return to LOCK during the OFF position.

**If the battery of the vehicle is discharged, the push-button ignition switch cannot be turned from the LOCK position.**

Some indicators and warnings for operation are displayed on the vehicle information display. (See "Vehicle information display" (P.2-19).)

### Automatic transmission models

The ignition lock is designed so that the ignition switch position cannot be switched to LOCK until the shift lever is moved to the P (Park) position.

When the ignition switch cannot be pushed toward the LOCK position, proceed as follows:

1. Move the shift lever into the P (Park) position.
2. Push the ignition switch to the OFF position. The ignition switch position indicator will not illuminate.
3. Open the door. The ignition switch will change to the LOCK position.

**The shift lever can be moved from the P (Park) position if the ignition switch is in the ON position and the brake pedal is depressed.**

## PUSH-BUTTON IGNITION SWITCH POSITIONS

### LOCK (Normal parking position)

The ignition switch can only be locked in this position.

The ignition switch will be unlocked when it is pushed to the ACC position while carrying the Intelligent Key or with the Intelligent Key inserted in the port.

### ACC (Accessories)

This position activates electrical accessories such as the radio, when the engine is not running.

### ON (Normal operating position)

This position turns on the ignition system and electrical accessories.

### OFF

The engine can be turned off in this position.

Automatic transmission models: The ignition lock is designed so that the ignition switch cannot be switched to the LOCK position until the shift lever is moved to the P (Park) position.

## EMERGENCY ENGINE SHUT OFF

To shut off the engine in an emergency situation while driving perform the following procedure:

- Rapidly push the push-button ignition switch 3 consecutive times in less than 1.5 seconds, or
- Push and hold the push-button ignition switch for more than 2 seconds.

**CAUTION**

**Do not leave the vehicle with the push-button ignition switch in ACC or ON positions when the engine is not running for an extended period. This can discharge the battery.**

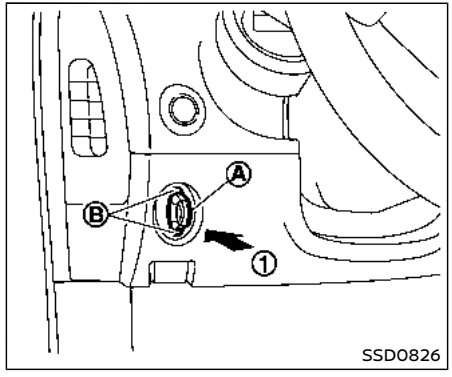


## INTELLIGENT KEY BATTERY DISCHARGE

If the battery of the Intelligent Key is almost discharged, the guide light Ⓑ of the Intelligent Key port Ⓐ blinks and the indicator appears on the vehicle information display. (See "Vehicle information display" (P.2-19).)

In this case, inserting the Intelligent Key into the port ① allows you to start the engine. Make sure that the key ring side faces backward as illustrated. Insert the Intelligent Key in the port until it is latched and secured.

To remove the Intelligent Key from the port, push the ignition switch to the OFF position and pull the Intelligent Key out of the port.

**NOTE:**

**The Intelligent Key port does not charge the Intelligent Key battery. If you see the low battery indicator in the vehicle information display, replace the battery as soon as possible. (See "Intelligent Key battery replacement" (P.8-20).)**

**CAUTION**

- **Never place anything except the Intelligent Key in the Intelligent Key port. Doing so may cause damage to the equipment.**
- **Make sure the Intelligent Key is in the correct direction when inserting it to the Intelligent Key port. The engine may not start if it is in the incorrect direction.**
- **Remove the Intelligent Key from the Intelligent Key port after the ignition switch is pushed to the OFF position.**

## BEFORE STARTING THE ENGINE

- Make sure the area around the vehicle is clear.
- Check fluid levels such as engine oil, coolant, brake fluid and window washer fluid as frequently as possible, or at least whenever you refuel.
- Check that all windows and lights are clean.
- Visually inspect tires for their appearance and condition. Also check tires for proper inflation.
- Lock all doors.
- Position seat and adjust head restraints.
- Adjust inside and outside mirrors.
- Fasten seat belts and ask all passengers to do likewise.
- Check the operation of warning lights when the ignition switch is pushed to the ON position. (See "Warning lights, indicator lights and audible reminders" (P.2-10).)

## STARTING THE ENGINE

1. Apply the parking brake.
2. **Automatic Transmission (AT) model:**

   Move the shift lever to the P (Park) or N (Neutral) position. (P is recommended.)

   The starter is designed not to operate unless the shift lever is in either of the above positions.

   **Manual Transmission (MT) model:**

   Move the shift lever to the N (Neutral) position. Depress the clutch pedal fully to the floor.

   The starter is designed not to operate unless the clutch pedal is fully depressed.

   **The Intelligent Key must be carried when operating the ignition switch.**
3. Push the ignition switch to the ON position. Depress the brake pedal (AT model) or the clutch pedal (MT model) and push the ignition switch to start the engine.

   To start the engine immediately, push and release the ignition switch while depressing the brake pedal or the clutch pedal with the ignition switch in any position.
   - If the engine is very hard to start in extremely cold weather or when restarting, depress the accelerator pedal a little (approximately 1/3 to the floor) and while holding, crank the engine. Release the accelerator pedal when the engine starts.
   - If the engine is very hard to start because it is flooded, depress the accelerator pedal all the way to the floor and hold it. Push the ignition switch to the ON position to start cranking the engine. After 5 or 6 seconds, stop cranking by pushing the ignition switch to OFF. After cranking the engine, release the accelerator pedal. Crank the engine **with your foot off the accelerator pedal** by depressing the brake pedal and pushing the push-button ignition switch to start the engine. If the engine starts, but fails to run, repeat the above procedure.

**CAUTION**

**Do not operate the starter for more than 15 seconds at a time. If the engine does not start, push the ignition switch to OFF and wait 10 seconds before cranking again, otherwise the starter could be damaged.**

4. **Warm-up**

   Allow the engine to idle for at least 30 seconds after starting. Do not race the engine while warming it up. Drive at moderate speed for a short distance first, especially in cold weather. In cold weather, keep the engine running for a minimum of 2 - 3 minutes before shutting it off. Starting and stopping the engine over a short period of time may make the vehicle more difficult to start.

   When racing the engine up to 4,500 rpm or more under no load condition, the engine will enter the fuel cut mode.

5. To stop the engine, shift the shift lever to the P (Park) position (AT model) or move the shift lever to the N (Neutral) position (MT model), and push the ignition switch to the OFF position.

**NOTE:**

**Care should be taken to avoid situations that can lead to potential battery discharge and potential no-start conditions such as:**

1. **Installation or extended use of electronic accessories that consume battery power when the engine is not running (Phone chargers, GPS, DVD players, etc.)**
2. **Vehicle is not driven regularly and/or only driven short distances.**

**In these cases, the battery may need to be charged to maintain battery health.**

# AUTOMATIC TRANSMISSION

## 7 speed automatic transmission

The automatic transmission in your vehicle is electronically controlled by a transmission control module to produce maximum efficiency and smooth operation.

Shown on the following pages are the recommended operating procedures for this transmission. Follow these procedures for maximum vehicle performance and driving enjoyment.

## Starting the vehicle

After starting the engine, fully depress the foot brake pedal and push the shift lever button before shifting the shift lever to the R (Reverse), N (Neutral), D (Drive) or Manual shift mode position. Be sure the vehicle is fully stopped before attempting to shift the shift lever.

**This automatic transmission model is designed so that the foot brake pedal must be depressed before shifting from P (Park) to any drive position while the ignition switch position is ON.**

**The shift lever cannot be moved out of the P (Park) position and into any of the other gear positions if the ignition switch is pushed to the LOCK, OFF or ACC position.**

1. Keep the foot brake pedal depressed and push the shift lever button to shift into a driving gear.
2. Release the parking brake and foot brake, then gradually start the vehicle in motion.

**WARNING**

- **Do not depress the accelerator pedal while shifting from P (Park) or N (Neutral) to R (Reverse) D (Drive), or manual shift mode. Always depress the brake pedal until shifting is completed. Failure to do so could cause you to lose control and have an accident.**
- **Cold engine idle speed is high, so use caution when shifting into a forward or reverse gear before the engine has warmed up.**
- **Never shift to either the P (Park) or R (Reverse) position while the vehicle is moving forward and P (Park) or D (Drive) position while the vehicle is reversing. This could cause an accident or damage the transmission.**
- **Do not downshift abruptly on slippery roads. This may cause a loss of control.**

**CAUTION**

- **Except in an emergency, do not shift to the N (Neutral) position while driving. Coasting with the transmission in the N (Neutral) position may cause serious damage to the transmission.**
- **To avoid possible damage to your vehicle; when stopping the vehicle on an uphill grade, do not hold the vehicle by depressing the accelerator pedal. The foot brake should be used for this purpose.**

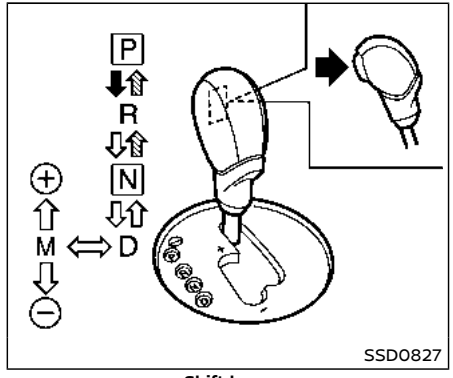


**Shift lever**

To move the shift lever,

➡: Push the button while depressing the brake pedal.

⇨: Push the button.

⇨: Just move the shift lever.

## Shifting

After starting the engine, fully depress the brake pedal and shift the shift lever from P (Park) to R (Reverse), N (Neutral), D (Drive) or Manual shift mode position.

Push the button to shift into P (Park) or R (Reverse). All other positions can be selected without pushing the button.

**WARNING**

**Apply the parking brake if the shift lever is in any position while the engine is not running. Failure to do so could cause the vehicle to move unexpectedly or roll away and result in serious personal injury or property damage.**

**CAUTION**

**Make sure the vehicle is completely stopped and the transmission is in the P (Park) position.**

**P (Park) position:**

Use this position when the vehicle is parked or when starting the engine. Make sure the vehicle is completely stopped. **The brake pedal must be depressed and the shift lever button pushed in to move the shift lever from the N (Neutral) position or any drive position to the P (Park) position.** Apply the parking brake. When parking on a hill, apply the parking brake first, then move the shift lever to the P (Park) position.

**CAUTION**

**Use this position only when the vehicle is completely stopped.**

**R (Reverse):**

Use this position to back up. Always be sure the vehicle is completely stopped before selecting the R (Reverse) position. **The brake pedal must be depressed and the shift lever button pushed in to move the shift lever from the P (Park) position, the N (Neutral) position or any drive position to the R (Reverse) position.**

**N (Neutral):**

Neither forward nor reverse gear is engaged. The engine can be started in this position. You may shift to the N (Neutral) position and restart a stalled engine while the vehicle is moving.

**D (Drive):**

Use this position for all normal forward driving.

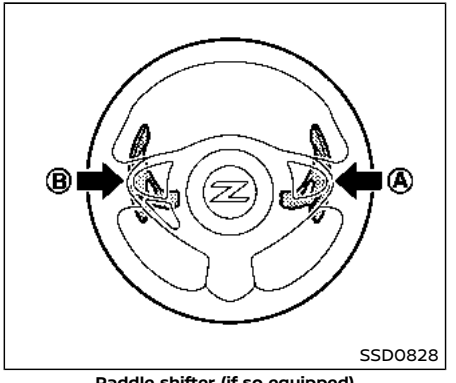


**Paddle shifter (if so equipped)**

## Manual shift mode

When the shift lever is in the manual shift gate, the transmission is ready for the manual shift mode. Shift ranges can be selected manually by moving the shift lever up or down, or pulling the right-side or left-side paddle shifter (if so equipped).

When shifting up, move the shift lever to the + (up) side or pull the right-side paddle shifter (if so equipped) (+) Ⓐ. The transmission shifts to the higher range.

When shifting down, move the shift lever to the − (down) side or pull the left-side paddle shifter (if so equipped) (−) Ⓑ. The transmission shifts to the lower range.

When canceling the manual shift mode, return the shift lever to the D (Drive) position. The transmission returns to the normal driving mode.

When you pull the paddle shifter (if so equipped) while in the D (Drive) position, the transmission will shift to the upper or lower range temporarily. The transmission will automatically return to the D (Drive) position after a short period of time. If you want to return to the D (Drive) position manually, pull and hold the paddle shifter (if so equipped) for about 1.5 seconds.

In the manual shift mode, the shift range is displayed on the transmission position indicator in the meter.

Shift ranges up or down one by one as follows:

$1^M \rightleftarrows 2^M \rightleftarrows 3^M \rightleftarrows 4^M \rightleftarrows 5^M \rightleftarrows 6^M \rightleftarrows 7^M$

**$7^M$ (7th):**

Use this position for all normal forward driving at highway speeds.

**$6^M$ (6th) and $5^M$ (5th):**

Use these positions when driving up long slopes, or for engine braking when driving down long slopes.

**$4^M$ (4th), $3^M$ (3rd) and $2^M$ (2nd):**

Use these positions for hill climbing or engine braking on downhill grades.

**$1^M$ (1st):**

Use this position when climbing steep hills slowly or driving slowly through deep snow, or for maximum engine braking on steep downhill grades.

- Remember not to drive at high speeds for extended periods of time in lower than 7th gear. This reduces fuel economy.
- Moving the shift lever rapidly to the same side twice will shift the ranges in succession.
- **In the manual shift mode, the transmission may not shift to the selected gear or may automatically shift to the other gear. This helps maintain driving performance and reduces the chance of vehicle damage or loss of control.**
- **When the transmission does not shift to the selected gear, the Automatic Transmission (AT) position indicator light (on the instrument panel) will blink and the buzzer will sound.**
- **In the manual shift mode, the transmission automatically shifts down to 1st gear before the vehicle comes to a stop. When accelerating again, it is necessary to shift up to the desired range.**

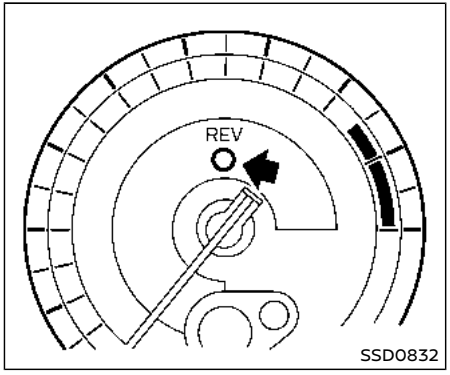


**Upshift indicator:**

The up-shift indicator is located in the tachometer and shows the driver the timing to shift into a higher gear by illuminating. The use of the up-shift indicator will help you to upshift at a constant engine speed from any gear.

The up-shift indicator will start flashing when the engine speed reaches about 500 rpm before the set figure while driving, and then illuminate after the engine speed reaches the set figure.

The engine speed for upshifting can be set on the vehicle information display. See "Trip computer" (P.2-23).

**There may be a slight difference between the timing of the up-shift indicator illumination and the tachometer indication.**

### Accelerator downshift — In D (Drive) position —

For passing or hill climbing, fully depress the accelerator pedal to the floor. This shifts the transmission down into the lower gear, depending on the vehicle speed.

### Fail-safe

When the fail-safe operation occurs, note that the transmission will be locked in any of the forward gears according to the condition.

**If the vehicle is driven under extreme conditions, such as excessive wheel spinning and subsequent hard braking, the fail-safe system may be activated. This will occur even if all electrical circuits are functioning properly. In this case, push the ignition switch to the OFF position and wait for 3 seconds. Then push the ignition switch back to the ON position. The vehicle should return to its normal operating condition. If it does not return to its normal operating condition, have the transmission checked and repaired, if necessary. It is recommended you visit a NISSAN dealer for this service.**

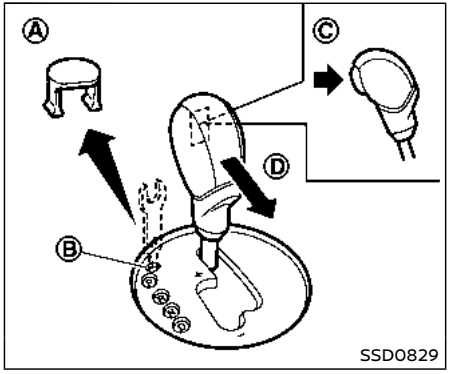


## Shift lock release

If the battery charge is low or discharged, the shift lever may not be moved from the P (Park) position even with the brake pedal depressed and the shift lever button pushed.

To move the shift lever, perform the following procedure:

1. Push the ignition switch to the OFF or LOCK position.
2. Apply the parking brake.
3. Remove the shift lock cover Ⓐ using a suitable tool.
4. Push down the shift lock Ⓑ using a suitable tool as illustrated.
5. Push the shift lever button Ⓒ and move the shift lever to the N (Neutral) position Ⓓ while holding down the shift lock.

Now the vehicle may be moved to the desired location.

If the lever cannot be moved out of P (Park), have the automatic transmission system checked as soon as possible. It is recommended you visit a NISSAN dealer for this service.

## MANUAL TRANSMISSION

**WARNING**

- **Do not downshift abruptly on slippery roads. This may cause a loss of control.**
- **Do not over-rev the engine when shifting to a lower gear. This may cause a loss of control or engine damage.**

**CAUTION**

- **Do not rest your foot on the clutch pedal while driving. This may damage the clutch.**
- **Fully depress the clutch pedal before shifting to help prevent transmission damage.**
- **Stop your vehicle completely before shifting into R (Reverse).**
- **When the vehicle is stopped with the engine running (for example, at a stop light), shift to N (Neutral) and release the clutch pedal with the foot brake applied.**

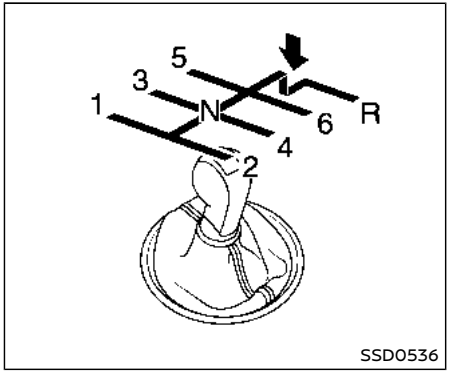


## Shifting

To change gears, or when upshifting or downshifting, fully depress the clutch pedal, shift into an appropriate gear, and then slowly and smoothly release the clutch pedal.

This vehicle is equipped with a short throw shifter manual transmission. To ensure smooth gear changes, be sure to fully depress the clutch pedal before operating the shift lever. If the clutch pedal is not fully depressed before the transmission is shifted, a gear noise may be heard. Transmission damage could occur.

Start the vehicle in 1st gear and upshift to 2nd, 3rd, 4th, 5th and 6th gear in sequence according to the vehicle speed.

To back up, depress the shift knob and then move the shift lever to the R (Reverse) position after stopping the vehicle completely.

The shift knob returns to its original position when the shift lever is moved to the N (Neutral) position.

If it is difficult to move the shift lever into R (Reverse) or 1st (Low gear), shift to N (Neutral), then release the clutch pedal. Fully depress the clutch pedal again and shift into R or 1st.

## SynchroRev Match mode (S-MODE) (if so equipped for Manual Transmission models)

The SynchroRev Match mode (S-MODE) automatically adjusts the engine speed to match the selecting gear ratio while changing gears.

**Precautions:**

- Shift lever and clutch pedal operations are not different than a conventional manual transmission.
- Fully depress the clutch pedal. Insufficient pedal depression may cause slow response of this system.
- When the clutch pedal is depressed with the gear still engaged, the engine speed is kept at the proper level for the engaged gear. Thus, the engine speed may be kept high depending on the gear position and vehicle speed.
- When the clutch pedal is depressed with the transmission in neutral, the system operates for approximately 2 seconds, and then the engine speed will decrease to the idle speed.
- When the engine coolant temperature is low right after starting the engine, engine speed synchronization will be delayed or may be insufficient.
- The system controls the engine speed up to the rev limit. Note that S-MODE is not a function that prevents over-revving resulting from shifting mistakes.
- The system does not operate while the vehicle is backing up.
- If the engine speed is limited lower than usual when the engine oil temperature is extremely high, the system will control up to the limited engine speed.
- If the malfunction indicator light illuminates, the system may not operate and the S-MODE indicator turns off.

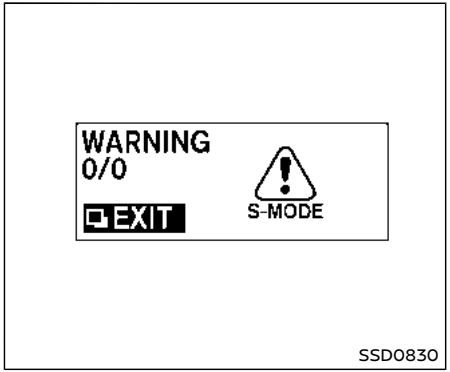


**SynchroRev Match mode (S-MODE) warning:**

The SynchroRev Match mode (S-MODE) warning will appear on the vehicle information display and the S-MODE indicator will turn off if a system malfunction occurs.

If the warning appears, the S-MODE function will not operate, but manual transmission will operate normally and driving can be continued. Have the system checked. It is recommended you visit a NISSAN dealer for this service.

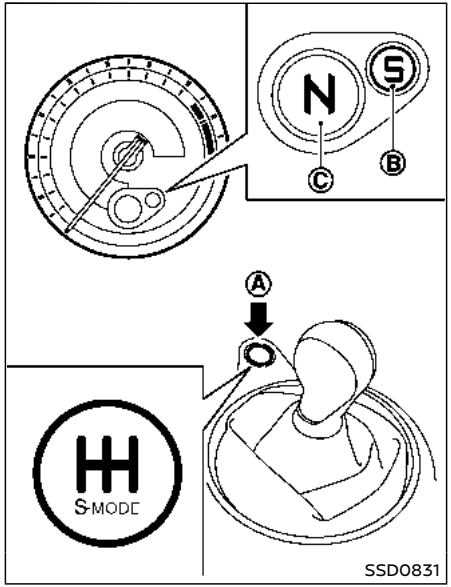


**Activating the system:**

To activate the S-MODE, push the S-MODE switch Ⓐ. The S-MODE indicator Ⓑ on the tachometer will show "S". To deactivate, push and hold the S-MODE switch for more than 1 second. The S-MODE indicator will turn off.

While the S-MODE is off, you can drive the vehicle as a conventional manual transmission model.

Note that the status of the S-MODE (on or off) is memorized even after the ignition switch is turned off; however, it will be initialized (off) when the battery is disconnected.

The transmission position indicator Ⓒ shows the selected gear: N (Neutral), 1, 2, 3, 4, 5, 6, R (Reverse).

**SynchroRev Match mode (S-MODE) operation:**

The SynchroRev Match mode (S-MODE) automatically adjusts the engine speed by controlling the engine throttle. The accelerator pedal does not have to be depressed.

The system detects the clutch pedal and shift lever operations, and then calculates the target engine speed using the shifting gear position and the vehicle speed information.

The system provides accurate engine speed control that helps achieve quick gear shifting and reduces shift shock on clutch engagement.

- **When downshifting:**
  The engine speed is automatically increased to the target engine speed

before the clutch is engaged.

- **When upshifting:**
  The engine speed is automatically kept after the engine speed lowers to the target engine speed.
  Rapid clutch engagement before the engine speed lowers to the target engine speed may cause shift shock.
- **When depressing the clutch pedal with the gear engaged:**
  The engine speed is automatically kept at the proper engine speed for the engaged gear.
  This function will not operate when low (1st) gear is selected.
  There is a delay between the clutch pedal operation and the S-MODE operation. Make sure the engine speed is adjusted before engaging the clutch again.

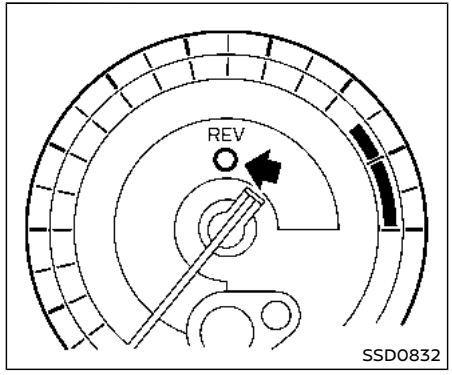


## Upshift indicator

The up-shift indicator is located in the tachometer and shows the driver the timing to shift into a higher gear by illuminating. The use of the up-shift indicator will help you to upshift at a constant engine speed from any gear.

The up-shift indicator will start flashing when the engine speed reaches about 500 rpm before the set figure while driving, and then illuminate after the engine speed reaches the set figure.

The engine speed for upshifting can be set on the vehicle information display. See "Trip computer" (P.2-23).

**There may be a slight difference between the timing of the up-shift indicator illumination and the tachometer indication.**

## Suggested up-shift speeds

Shown below are suggested vehicle speeds for shifting into a higher gear. These suggestions relate to fuel economy and vehicle performance. Actual up-shift speeds will vary according to road conditions, the weather and individual driving habits.

For normal acceleration in low altitude areas [less than 4,000 ft (1,219 m)]:

| Gear change | MPH (km/h) |
|---|---|
| 1st to 2nd | 8 (13) |
| 2nd to 3rd | 16 (26) |
| 3rd to 4th | 25 (40) |
| 4th to 5th | 28 (45) |
| 5th to 6th | 33 (53) |

For quick acceleration in low altitude areas or in high altitude areas [over 4,000 ft (1,219 m)]:

| Gear change | MPH (km/h) |
|---|---|
| 1st to 2nd | 15 (24) |
| 2nd to 3rd | 25 (40) |
| 3rd to 4th | 40 (64) |
| 4th to 5th | 45 (72) |
| 5th to 6th | 50 (80) |

## Suggested maximum speed in each gear

Downshift to a lower gear if the engine is not running smoothly, or if you need to accelerate.

Do not exceed the maximum suggested speed (shown below) in any gear. For level road driving, use the highest gear suggested for that speed. Always observe posted speed limits, and drive according to the road conditions, which will ensure safe operation. Do not over-rev the engine when shifting to a lower gear as it may cause engine damage or loss of vehicle control.

| Gear | MPH (km/h) |
|---|---|
| 1st | 38 (62) |
| 2nd | 63 (102) |
| 3rd | 91 (146) |
| 4th | — |
| 5th | — |
| 6th | — |

**WARNING**

- **Be sure the parking brake is fully released before driving. Failure to do so can cause brake failure and lead to an accident.**
- **Do not release the parking brake from outside the vehicle.**
- **Do not use the shift lever in place of the parking brake. When parking, be sure the parking brake is fully engaged.**
- **To help avoid risk of injury or death through unintended operation of the vehicle and/or its systems, do not leave children, people who require the assistance of others or pets unattended in your vehicle. Additionally, the temperature inside a closed vehicle on a warm day can quickly become high enough to cause a significant risk of injury or death to people and pets.**

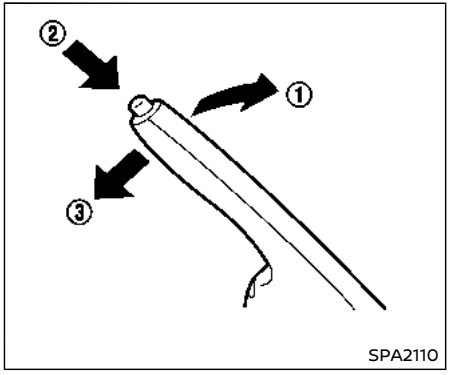


**To apply:** Pull the parking brake lever up ①.

**To release:**

1. Firmly apply the foot brake.
2. While pulling up on the parking brake lever slightly, push the button ② and lower the lever completely ③.
3. Before driving, be sure the brake warning light goes out.

## PRECAUTIONS ON CRUISE CONTROL

- If the cruise control system malfunctions, it will cancel automatically. The CRUISE indicator light on the meter panel will then blink to warn the driver.
- If the engine coolant temperature becomes excessively high, the cruise control system will cancel automatically.
- If the CRUISE indicator light blinks, turn the cruise control main switch off and have the system checked. It is recommended you visit a NISSAN dealer for this service.
- The CRUISE indicator light may blink when the cruise control main switch is turned ON while pushing the ACCEL/RES, COAST/SET or CANCEL switch. To properly set the cruise control system, perform the following procedures.

**WARNING**

**Do not use the cruise control when driving under the following conditions:**

- **when it is not possible to keep the vehicle at a set speed**
- **in heavy traffic or in traffic that varies in speed**
- **on winding or hilly roads**
- **on slippery roads (rain, snow, ice, etc.)**
- **in very windy areas**

**Doing so could cause a loss of vehicle control and result in an accident.**

**CAUTION**

**On manual transmission models, do not shift into N (Neutral) without depressing the clutch pedal when the cruise control is set. Should this occur, depress the clutch pedal and turn the main switch off immediately. Failure to do so may cause engine damage.**

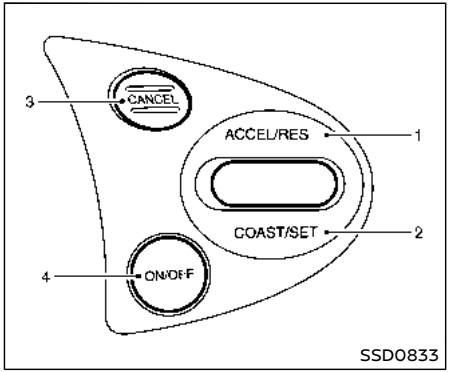


**Type A (if so equipped)**

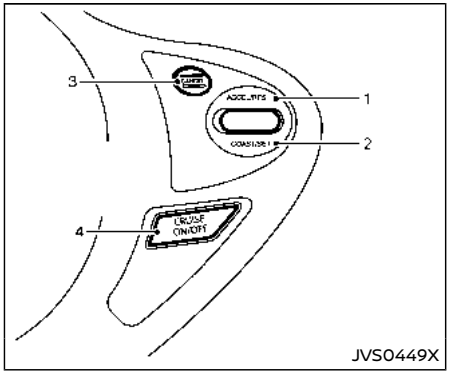


**Type B (if so equipped)**

1. ACCEL/RES switch
2. COAST/SET switch
3. CANCEL switch
4. MAIN (ON·OFF) switch

## CRUISE CONTROL OPERATIONS

The cruise control allows driving at a speed between 25 to 89 MPH (40 to 144 km/h) without keeping your foot on the accelerator pedal.

**To turn on the cruise control,** push the MAIN switch on. The CRUISE indicator light will illuminate.

**To set cruising speed,** accelerate the vehicle to the desired speed, push the COAST/SET switch and release it. Take your foot off the accelerator pedal. Your vehicle will maintain the set speed.

- **To pass another vehicle,** depress the accelerator pedal. When you release the pedal, the vehicle will return to the previously set speed.
- The vehicle may not maintain the set speed on winding or hilly roads. If this happens, drive without the cruise control.

**To cancel the preset speed,** use one of the following methods:

- Push the CANCEL switch.
- Tap the brake pedal.
- Turn the MAIN switch off. The CRUISE light will turn off.
  - If you depress the brake pedal while pushing the ACCEL/RES or COAST/SET switch and reset at the cruising speed, the cruise control will disengage. Turn the MAIN switch off once and then turn it on again.
  - The cruise control will automatically cancel if the vehicle slows more than 8 MPH (13 km/h) below the set speed.
  - If you move the shift lever to the N (Neutral) position (Automatic Transmission models) or depress the clutch pedal (Manual Transmission models), the cruise control will be canceled.

**To reset at a faster cruising speed,** use one of the following methods:

- Depress the accelerator pedal. When the vehicle attains the desired speed, push and release the COAST/SET switch.
- Push and hold the ACCEL/RES switch. When the vehicle attains the desired speed, release the switch.
- Push, then quickly release the ACCEL/RES switch. Each time you do this, the set speed will increase by about 1 MPH (1.6 km/h).

**To reset at a slower cruising speed,** use one of the following methods:

- Lightly tap the brake pedal. When the vehicle attains the desired speed, push the COAST/SET switch and release it.
- Push and hold the COAST/SET switch. Release the switch when the vehicle slows down to the desired speed.
- Push, then quickly release the COAST/SETT switch. Each time you do this, the set speed will decrease by about 1 MPH (1.6 km/h).

**To resume the preset speed,** push and release the ACCEL/RES switch. The vehicle will resume the last set cruising speed when the vehicle speed is over 25 MPH (40 km/h).

## BREAK-IN SCHEDULE

**CAUTION**

**During the first 1,200 miles (2,000 km), follow these recommendations to obtain maximum engine performance and ensure the future reliability and economy of your new vehicle.**

**Failure to follow these recommendations may result in shortened engine life and reduced engine performance.**

- Avoid driving for long periods at constant speed, either fast or slow. Do not run the engine over 4,000 rpm.
- Do not accelerate at full throttle in any gear.
- Avoid quick starts.
- Avoid hard braking as much as possible.

## FUEL EFFICIENT DRIVING TIPS

Follow these easy-to-use Fuel Efficient Driving Tips to help you achieve the most fuel economy from your vehicle.

1. Use smooth accelerator and brake pedal application.
   - Avoid rapid starts and stops.
   - Use smooth, gentle accelerator and brake application whenever possible.
   - Maintain constant speed while commuting and coast whenever possible.
2. Maintain constant speed.
   - Look ahead to try and anticipate and minimize stops.
   - Synchronizing your speed with traffic lights allows you to reduce your number of stops.
   - Maintaining a steady speed can minimize red light stops and improve fuel efficiency.
3. Use air conditioning (A/C) at higher vehicle speeds.
   - Below 40 MPH (64 km/h), it is more efficient to open windows to cool the vehicle due to reduced engine load.
   - Above 40 MPH (64 km/h), it is more efficient to use A/C to cool the vehicle due to increased aerodynamic drag.

- Recirculating the cool air in the cabin when the A/C is on reduces cooling load.

4. Drive at economical speeds and distances.
   - Observing the speed limit and not exceeding 60 MPH (97 km/h) (where legally allowed) can improve fuel efficiency due to reduced aerodynamic drag.
   - Maintaining a safe following distance behind other vehicles reduces unnecessary braking.
   - Safely monitoring traffic to anticipate changes in speed permits reduced braking and smooth acceleration changes.
   - Select a gear range suitable to road conditions.
5. Use cruise control.
   - Using cruise control during highway driving helps maintain a steady speed.
   - Cruise control is particularly effective in providing fuel savings when driving on flat terrains.
6. Plan for the shortest route.
   - Utilize a map or navigation system to determine the best route to save time.
7. Avoid idling.
   - Shutting off your engine when safe for stops exceeding 30-60 seconds saves fuel and reduces emissions.
8. Buy an automated pass for toll roads.
   - Automated passes permit drivers to use special lanes to maintain cruising speed through the toll and avoid stopping and starting.
9. Winter warm up.
   - Limit idling time to minimize impact to fuel economy.
   - Vehicles typically need no more than 30 seconds of idling at start-up to effectively circulate the engine oil before driving.
   - Your vehicle will reach its ideal operating temperature more quickly while driving versus idling.
10. Keeping your vehicle cool.
    - Park your vehicle in a covered parking area or in the shade whenever possible.
    - When entering a hot vehicle, opening the windows will help to reduce the inside temperature faster, resulting in reduced demand on your A/C system.

- Keep your engine tuned up.
- Follow the recommended scheduled maintenance.
- Keep the tires inflated to the correct pressure. Low tire pressure increases tire wear and lowers fuel economy.
- Keep the wheels in correct alignment. Improper alignment increases tire wear and lowers fuel economy.
- Use the recommended viscosity engine oil. (See “Engine oil and oil filter recommendation” (P.10-7).)

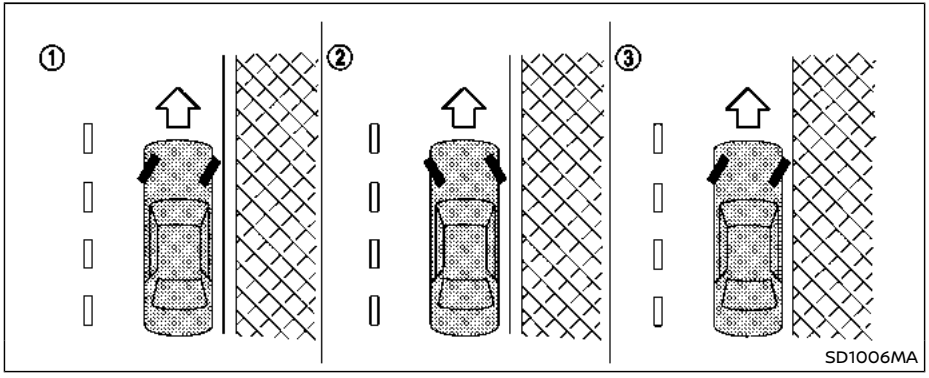


## WARNING

- **Do not stop or park the vehicle over flammable materials such as dry grass, waste paper or rags. They may ignite and cause a fire.**
- **Never leave the engine running while the vehicle is unattended.**
- **Do not leave children unattended inside the vehicle. They could unknowingly activate switches or controls. Unattended children could become involved in serious accidents.**
- **To help avoid risk of injury or death through unintended operation of the vehicle and/or its systems, do not leave children, people who require the assistance of others or pets unattended in your vehicle. Additionally, the temperature inside a closed vehicle on a warm day can quickly become high enough to cause a significant risk of injury or death to people and pets.**
- **Safe parking procedures require that both the parking brake be applied and the transmission placed into P (Park) for Automatic Transmission (AT) model or in an appropriate gear for Manual Transmission (MT) model. Failure to do so could cause the vehicle to move unexpectedly or roll away and result in an accident.**
- **Make sure the automatic transmission shift lever has been pushed as far forward as it can go and cannot be moved without depressing the foot brake pedal.**

1. Firmly apply the parking brake.
2. **Automatic transmission models:**

   Move the shift lever to the P (Park) position.

   **Manual transmission models:**

   Place the shift lever in the R (Reverse) gear. When parking on an uphill grade, place the shift lever in the 1st gear.
3. To help prevent the vehicle from rolling into the street when parked on a sloping drive way, it is a good practice to turn the wheels as illustrated.
   - HEADED DOWNHILL WITH CURB: ①

     Turn the wheels into the curb and move the vehicle forward until the curb side wheel gently touches the curb.

- HEADED UPHILL WITH CURB: ②

  Turn the wheels away from the curb and move the vehicle back until the curb side wheel gently touches the curb.

- HEADED UPHILL OR DOWNHILL, NO CURB: ③

  Turn the wheels toward the side of the road so the vehicle will move away from the center of the road if it moves.

4. Push the ignition switch to the OFF position.

## POWER STEERING

**WARNING**

**If the engine is not running or is turned off while driving, the power assist for the steering will not work. Steering will be harder to operate.**

The power assisted steering uses a hydraulic pump, driven by the engine, to assist steering.

If the engine stops or the drive belt breaks, you will still have control of the vehicle. However, much greater steering effort is needed, especially in sharp turns and at low speeds.

## BRAKE SYSTEM

### BRAKING PRECAUTIONS

The brake system has two separate hydraulic circuits. If one circuit malfunctions, you will still have braking at two wheels.

### Vacuum assisted brakes

The brake booster aids braking by using engine vacuum. If the engine stops, you can stop the vehicle by depressing the brake pedal. However, greater foot pressure on the brake pedal will be required to stop the vehicle and the stopping distance will be longer.

### Wet brakes

When the vehicle is washed or driven through water, the brakes may get wet. As a result, your braking distance will be longer and the vehicle may pull to one side during braking.

To dry brakes, drive the vehicle at a safe speed while lightly tapping the brake pedal to heat-up the brakes. Do this until the brakes return to normal. Avoid driving the vehicle at high speeds until the brakes function correctly.

## PARKING BRAKE BREAK-IN

Break in the parking brake shoes whenever the stopping effect of the parking brake is weakened or whenever the parking brake shoes and/or drums/rotors are replaced, in order to assure the best braking performance.

This procedure is described in the vehicle service manual. It is recommended you visit a NISSAN dealer for this service.

## Using the brakes

Avoid resting your foot on the brake pedal while driving. This will cause overheating of the brakes, wearing out the brake and pads faster and reduce gas mileage.

To help save the brakes and to prevent the brakes from overheating, reduce speed and downshift to a lower gear before going down a slope or long grade. Overheated brakes may reduce braking performance and could result in loss of vehicle control.

**WARNING**

- **While driving on a slippery surface, be careful when braking, accelerating or downshifting. Abrupt braking or accelerating could cause the wheels to skid and result in an accident.**
- **If the engine is not running or is turned off while driving, the power assist for the brakes will not work. Braking will be harder.**

# BRAKE ASSIST

## BRAKE ASSIST

When the force applied to the brake pedal exceeds a certain level, the Brake Assist is activated generating greater braking force than a conventional brake booster even with light pedal force.

**WARNING**

**The Brake Assist is only an aid to assist braking operation and is not a collision warning or avoidance device. It is the driver's responsibility to stay alert, drive safely and be in control of the vehicle at all times.**

## ANTI-LOCK BRAKING SYSTEM (ABS)

**WARNING**

- **The Anti-lock Braking System (ABS) is a sophisticated device, but it cannot prevent accidents resulting from careless or dangerous driving techniques. It can help maintain vehicle control during braking on slippery surfaces. Remember that stopping distances on slippery surfaces will be longer than on normal sur-**

**faces even with ABS. Stopping distances may also be longer on rough, gravel or snow covered roads, or if you are using tire chains. Always maintain a safe distance from the vehicle in front of you. Ultimately, the driver is responsible for safety.**

- **Tire type and condition may also affect braking effectiveness.**
  - **When replacing tires, install the specified size of tires on all four wheels.**
  - **When installing a spare tire, make sure that it is the proper size and type as specified on the Tire and Loading Information label. See "Tire and Loading Information label" (P.10-14) of this manual.**
  - **For detailed information, see "Wheels and tires" (P.8-26) of this manual.**

The Anti-lock Braking System (ABS) controls the brakes so the wheels do not lock during hard braking or when braking on slippery surfaces. The system detects the rotation speed at each wheel and varies the brake fluid pressure to prevent each wheel from locking and sliding. By preventing each wheel from locking, the system helps the driver maintain steering control and helps to minimize swerving and spinning on slippery surfaces.

## Using the system

Depress the brake pedal and hold it down. Depress the brake pedal with firm steady pressure, but do not pump the brakes. The ABS will operate to prevent the wheels from locking up. Steer the vehicle to avoid obstacles.

**WARNING**

**Do not pump the brake pedal. Doing so may result in increased stopping distances.**

## Self-test feature

The ABS includes electronic sensors, electric pumps, hydraulic solenoids and a computer. The computer has a built-in diagnostic feature that tests the system each time you start the engine and move the vehicle at a low speed in forward or reverse. When the self-test occurs, you may hear a "clunk" noise and/or feel a pulsation in the brake pedal. This is normal and does not indicate a malfunction. If the computer senses a malfunction, it switches the ABS off and illuminates the ABS warning light on the instrument panel. The brake system then operates normally, but without anti-lock assistance.

If the ABS warning light illuminates during the self-test or while driving, have the vehicle checked. It is recommended you visit a NISSAN dealer for this service.

## Normal operation

The ABS operates at speeds above 3 to 6 MPH (5 to 10 km/h).

When the ABS senses that one or more wheels are close to locking up, the actuator rapidly applies and releases hydraulic pressure. This action is similar to pumping the brakes very quickly. You may feel a pulsation in the brake pedal and hear a noise from under the hood or feel a vibration from the actuator when it is operating. This is normal and indicates that the ABS is operating properly. However, the pulsation may indicate that road conditions are hazardous and extra care is required while driving.

The Vehicle Dynamic Control (VDC) system uses various sensors to monitor driver inputs and vehicle motion. Under certain driving conditions, the VDC system helps to perform the following functions.

- Controls brake pressure to reduce wheel slip on one slipping drive wheel so power is transferred to a non slipping drive wheel on the same axle.
- Controls brake pressure and engine output to reduce drive wheel slip based on vehicle speed (traction control function).
- Controls brake pressure at individual wheels and engine output to help the driver maintain control of the vehicle in the following conditions:
  - understeer (vehicle tends to not follow the steered path despite increased steering input)
  - oversteer (vehicle tends to spin due to certain road or driving conditions).

The VDC system can help the driver to maintain control of the vehicle, but it cannot prevent loss of vehicle control in all driving situations.

When the VDC system operates, the VDC warning light in the instrument panel flashes so note the following:

- The road may be slippery or the system may determine some action is required to help keep the vehicle on the steered path.
- You may feel a pulsation in the brake pedal and hear a noise or vibration from under the hood. This is normal and indicates that the VDC system is working properly.
- Adjust your speed and driving to the road conditions.

See "Vehicle Dynamic Control (VDC) warning light" (P.2-15).

If a malfunction occurs in the system, the VDC warning light illuminates in the instrument panel. The VDC system automatically turns off.

The VDC OFF switch is used to turn off the VDC system. The VDC off indicator light illuminates to indicate the VDC system is off. When the VDC switch is used to turn off the system, the VDC system still operates to prevent one drive wheel from slipping by transferring power to a non slipping drive wheel. The VDC warning light flashes if this occurs. All other VDC functions are off, and the VDC warning light will not flash. The VDC system is automatically reset to on when the ignition switch is placed in the off position then back to the on position.

See "Vehicle Dynamic Control (VDC) warning light" (P.2-15) and "Vehicle Dynamic Control (VDC) off indicator light" (P.2-18).

The computer has a built-in diagnostic feature that tests the system each time you start the engine and move the vehicle forward or in reverse at a slow speed. When the self-test occurs, you may hear a "clunk" noise and/or feel a pulsation in the brake pedal. This is normal and is not an indication of a malfunction.

**WARNING**

- **The VDC system is designed to help the driver maintain stability but does not prevent accidents due to abrupt steering operation at high speeds or by careless or dangerous driving techniques. Reduce vehicle speed and be especially careful when driving and cornering on slippery surfaces and always drive carefully.**
- **Do not modify the vehicle's suspension. If suspension parts such as shock absorbers, struts, springs, stabilizer bars, bushings and wheels are not NISSAN recommended for your vehicle or are extremely deteriorated, the VDC system may not operate**

properly. This could adversely affect vehicle handling performance, and the VDC warning light may illuminate.

- If brake related parts such as brake pads, rotors and calipers are not NISSAN recommended or are extremely deteriorated, the VDC system may not operate properly and the VDC warning light may illuminate.
- If engine control related parts are not NISSAN recommended or are extremely deteriorated, the VDC warning light may illuminate.
- When driving on extremely inclined surfaces such as higher banked corners, the VDC system may not operate properly and the VDC warning light may illuminate. Do not drive on these types of roads.
- When driving on an unstable surface such as a turntable, ferry, elevator or ramp, the VDC warning light may illuminate. This is not a malfunction. Restart the engine after driving onto a stable surface.
- If wheels or tires other than the NISSAN recommended ones are used, the VDC system may not operate properly and the VDC warning light may illuminate.
- The VDC system is not a substitute for winter tires or tire chains on a snow covered road.

## PERFORMANCE DAMPERS (NISMO models)

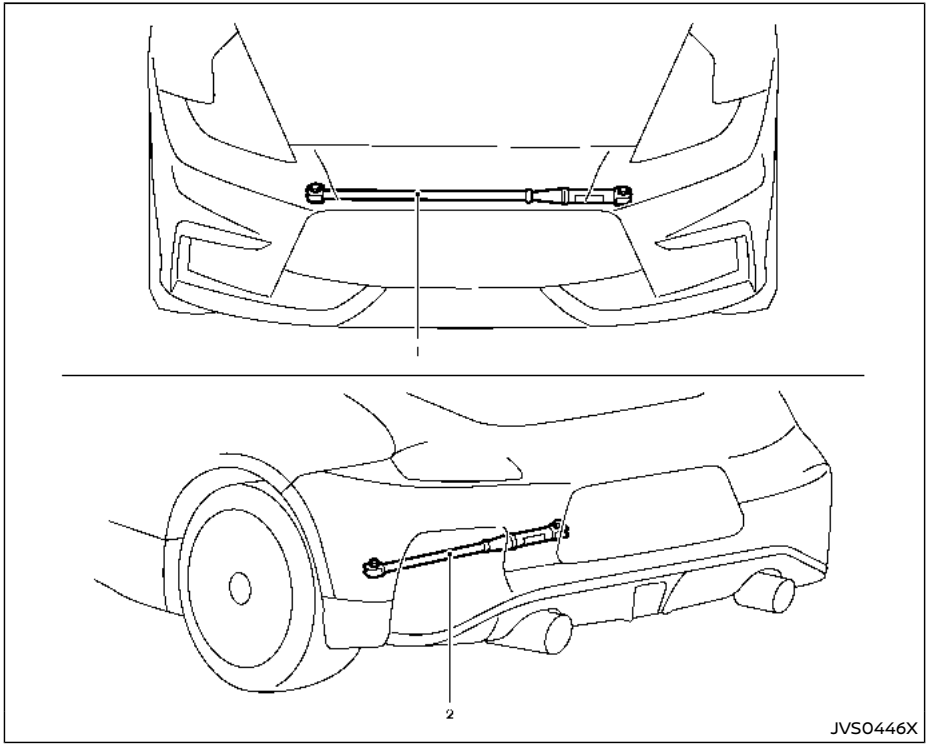


1. Front performance damper
2. Rear performance damper

The performance dampers are installed in the front and rear parts of the NISMO models for improved handling and ride.

**WARNING**

- **High-pressure nitrogen gas is sealed inside the performance dampers. Do not attempt to modify or disassemble them.**
- **For disposal of the performance dampers or when scrapping the vehicle, it is recommended you visit a NISSAN dealer for this service. Never burn or puncture the performance dampers. Incorrect disposal procedures could cause serious personal injury.**

## FREEING A FROZEN DOOR LOCK

To prevent a door lock from freezing, apply deicer through the key hole. If the lock becomes frozen, heat the key before inserting it into the key hole or use the Intelligent Key system.

## ANTIFREEZE

In the winter when it is anticipated that the outside temperature will drop below 32°F (0°C), check antifreeze to assure proper winter protection. For additional information, see "Engine cooling system" (P.8-4).

## BATTERY

If the battery is not fully charged during extremely cold weather conditions, the battery fluid may freeze and damage the battery. To maintain maximum efficiency, the battery should be checked regularly. For additional information, see "Battery" (P.8-11).

## DRAINING OF COOLANT WATER

If the vehicle is to be left outside without antifreeze, drain the cooling system, including the engine block. Refill before operating the vehicle. For details, see "Engine cooling system" (P.8-4).

## TIRE EQUIPMENT

SUMMER tires have a tread designed to provide superior performance on dry pavement. However, the performance of these tires will be substantially reduced in snowy and icy conditions. If you operate your vehicle on snowy or icy roads, NISSAN recommends the use of MUD & SNOW or ALL SEASON tires on all four wheels. It is recommended you consult a NISSAN dealer for the tire type, size, speed rating and availability information.

For additional traction on icy roads, studded tires may be used. However, some U.S. states and Canadian provinces prohibit their use. Check local, state and provincial laws before installing studded tires.

**Skid and traction capabilities of studded snow tires, on wet or dry surfaces, may be poorer than that of non-studded snow tires.**

Tire chains may be used. For details, see "Tire chains" (P.8-33) of this manual.

## SPECIAL WINTER EQUIPMENT

It is recommended that the following items be carried in the vehicle during winter:

- A scraper and stiff-bristled brush to remove ice and snow from the windows and wiper blades.
- A sturdy, flat board to be placed under the jack to give it firm support.
- A shovel to dig the vehicle out of snowdrifts.
- Extra window washer fluid to refill the reservoir tank.

## DRIVING ON SNOW OR ICE

**WARNING**

- **Wet ice (32°F, 0°C and freezing rain), very cold snow or ice can be slick and very hard to drive on. The vehicle will have much less traction or "grip" under these conditions. Try to avoid driving on wet ice until the road is salted or sanded.**
- **Whatever the condition, drive with caution. Accelerate and slow down with care. If accelerating or downshifting too fast, the drive wheels will lose even more trac-**

**tion.**

- **Allow more stopping distance under these conditions. Braking should be started sooner than on dry pavement.**
- **Allow greater following distances on slippery roads.**
- **Watch for slippery spots (glare ice). These may appear on an otherwise clear road in shaded areas. If a patch of ice is seen ahead, brake before reaching it. Try not to brake while on the ice, and avoid any sudden steering maneuvers.**
- **Do not use the cruise control on slippery roads.**
- **Snow can trap dangerous exhaust gases under your vehicle. Keep snow clear of the exhaust pipe and from around your vehicle.**

## ENGINE BLOCK HEATER (if so equipped)

Engine block heaters are used to assist with cold temperature starting.

The engine block heater should be used when the outside temperature is 20°F (–7°C) or lower.

### To use the engine block heater

1. Turn the engine off.
2. Open the hood and unwrap the engine block heater cord.
3. Plug the engine block heater cord into a grounded 3-wire, 3-pronged extension cord.
4. Plug the extension cord into a Ground Fault Interrupt (GFI) protected, grounded 110-volt AC (VAC) outlet.
5. The engine block heater must be plugged in for at least 2 - 4 hours, depending on outside temperatures, to properly warm the engine coolant. Use an appropriate timer to turn the engine block heater on.
6. Before starting the engine, unplug and properly store the cord to keep it away from moving parts.

**WARNING**

- **Do not use your engine block heater with an ungrounded electrical system or a 2-pronged adapter. You can be seriously injured by an electrical shock if you use an ungrounded connection.**
- **Disconnect and properly store the engine block heater cord before starting the engine. Damage to the cord could result in an electrical shock and can cause serious injury.**
- **Use a heavy-duty 3-wire, 3-pronged extension cord rated for at least 10A. Plug the extension cord into a Ground Fault Interrupt (GFI) protected, grounded 110-VAC outlet. Failure to use the proper extension cord or a grounded outlet can result in a fire or electrical shock and cause serious personal injury.**

## ACTIVE NOISE CANCELLATION/ACTIVE SOUND ENHANCEMENT (if so equipped)

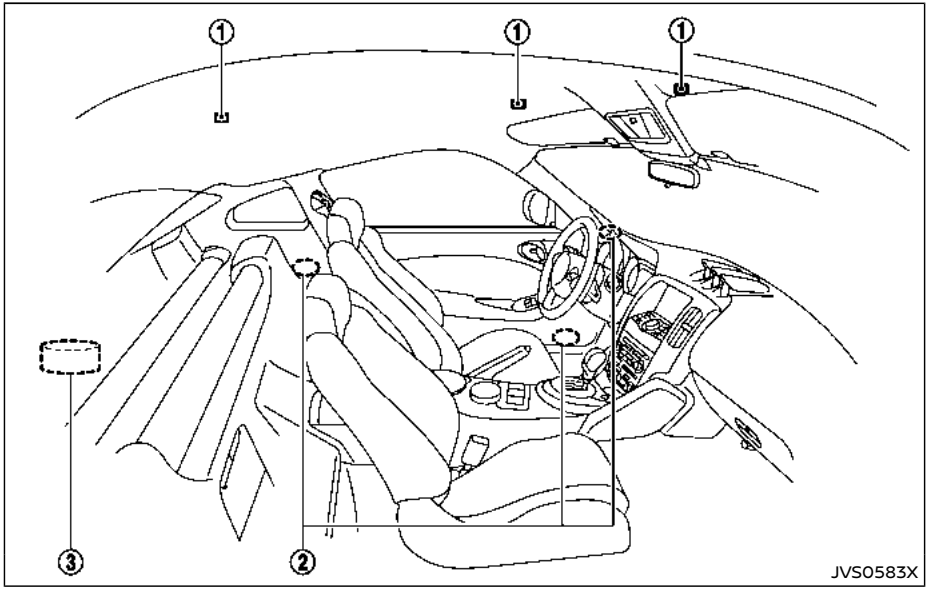


① Microphones
② Speakers
③ Woofer (on the spare tire)

**NOTE:**

**To operate the active noise cancellation and active sound enhancement properly:**

- Do not cover the speakers or woofer.
- Do not cover the microphones.
- Do not change or modify speakers including the woofer and any audio related parts such as the amplifier.
- Do not make any modification including sound deadening or modifications around the microphones, speakers or woofer.

### ACTIVE NOISE CANCELLATION

The active noise cancellation uses microphones ① located inside the vehicle to detect engine booming noises. The system then automatically produces a muted engine booming noise through the speakers ② and woofer ③ to reduce engine booming noise.

If the microphone ① or the area around it is tapped, abnormal noise may be output from the speaker.

### ACTIVE SOUND ENHANCEMENT

The active sound enhancement generates sounds according to engine speed and driving modes through the speakers ② and woofer ③ to enhance the quality of the engine sound.

**MEMO**

# 6 In case of emergency


Hazard warning flasher switch ..... 6-2
Roadside assistance program ..... 6-2
Emergency engine shut off ..... 6-3
Flat tire ..... 6-3
Tire Pressure Monitoring System (TPMS) ..... 6-3
Changing a flat tire (for models with spare tire) ..... 6-4
Repairing flat tire (for models with emergency tire puncture repair kit) ..... 6-9
Jump starting ..... 6-15
Push starting ..... 6-17
If your vehicle overheats ..... 6-17
Towing your vehicle ..... 6-19
Towing Automatic Transmission recommended by NISSAN (except for NISMO models) ..... 6-20
Towing Manual Transmission recommended by NISSAN (except for NISMO models) ..... 6-21
Towing recommended by NISSAN (NISMO models) ..... 6-22
Vehicle recovery (freeing a stuck vehicle) ..... 6-22

## HAZARD WARNING FLASHER SWITCH

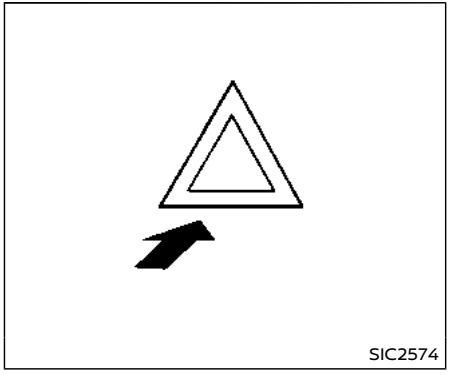


Push the switch on to warn other drivers when you must stop or park under emergency conditions. All turn signal lights will flash.

**WARNING**

- **If stopping for an emergency, be sure to move the vehicle well off the road.**
- **Do not use the hazard warning flashers while moving on the highway unless unusual circumstances force you to drive so slowly that your vehicle might become a hazard to other traffic.**
- **Turn signals do not work when the hazard warning flasher lights are on.**

The flasher can be actuated with the ignition switch in any position.

**Some state laws may prohibit the use of the hazard warning flasher switch while driving.**

## ROADSIDE ASSISTANCE PROGRAM

In the event of a roadside emergency, Roadside Assistance Service is available to you. Please refer to your Warranty Information Booklet for details.

## EMERGENCY ENGINE SHUT OFF

To shut off the engine in an emergency situation while driving, perform the following procedure:

- Rapidly push the push-button ignition switch 3 consecutive times in less than 1.5 seconds, or
- Push and hold the push-button ignition switch for more than 2 seconds.

## FLAT TIRE

### TIRE PRESSURE MONITORING SYSTEM (TPMS)

This vehicle is equipped with the Tire Pressure Monitoring System (TPMS). It monitors tire pressure of all tires except the spare. When the low tire pressure warning light is lit and the CHECK TIRE PRESSURE warning appears on the vehicle information display, one or more of your tires is significantly under-inflated. If the vehicle is being driven with low tire pressure, the TPMS will activate and warn you of it by the low tire pressure warning light. This system will activate only when the vehicle is driven at speeds above 16 MPH (25 km/h). For more details, see "Warning lights, indicator lights and audible reminders" (P.2-10) and "Tire Pressure Monitoring System (TPMS)" (P.5-3).

**WARNING**

- **If the low tire pressure warning light illuminates while driving, avoid sudden steering maneuvers or abrupt braking, reduce vehicle speed, pull off the road to a safe location and stop the vehicle as soon as possible. Driving with under-inflated tires may permanently damage the tires and increase the likelihood of tire failure. Serious vehicle damage could occur and may lead to an accident and could result in serious personal injury. Check the tire pressure for all four tires. Adjust the tire pressure to the recommended COLD tire pressure shown on the Tire and Loading Information label to turn the low tire pressure warning light OFF. If the light still illuminates while driving after adjusting the tire pressure, a tire may be flat or the TPMS may be malfunctioning. If you have a flat tire, replace it with a spare tire (if so equipped) or repair it with the tire puncture repair kit (if so equipped) as soon as possible. If no tire is flat and all tires are properly inflated, it is recommended you consult a NISSAN dealer.**
- **Since the spare tire is not equipped with the TPMS, when a spare tire is mounted or a wheel is replaced, the TPMS will not function and the low tire pressure warning light will flash for approximately 1 minute. The light will remain on after 1 minute. Have your tires replaced and/or TPMS system reset as soon as**

**possible. It is recommended you visit a NISSAN dealer for these services.**

- **Replacing tires with those not originally specified by NISSAN could affect the proper operation of the TPMS.**
- **NISSAN recommends using only Genuine NISSAN Emergency Tire Sealant provided with your vehicle. Other tire sealants may damage the valve stem seal which can cause the tire to lose air pressure. It is recommended you visit a NISSAN dealer as soon as possible after using tire repair sealant (for models equipped with the emergency tire puncture repair kit).**

## CHANGING A FLAT TIRE (for models with spare tire)

If you have a flat tire, follow the instructions below.

### Stopping the vehicle

1. Safely move the vehicle off the road and away from traffic.
2. Turn on the hazard warning flashers.
3. Park on a level surface and apply the parking brake. Move the shift lever to the P (Park) position (Automatic transmission models). Move the shift lever to the R (Reverse) gear (Manual transmission models).
4. Turn off the engine.
5. Raise the hood to warn other traffic, and to signal professional road assistance personnel that you need assistance.
6. Have all passengers get out of the vehicle and stand in a safe place, away from traffic and clear of the vehicle.

**WARNING**

- **Make sure the parking brake is securely applied and the manual transmission is shifted into R (Reverse), or the automatic transmission into P (Park).**
- **Never change tires when the vehicle is on a slope, ice or slippery areas. This is hazardous.**
- **Never change tires if oncoming traffic is close to your vehicle. Wait for professional road assistance.**

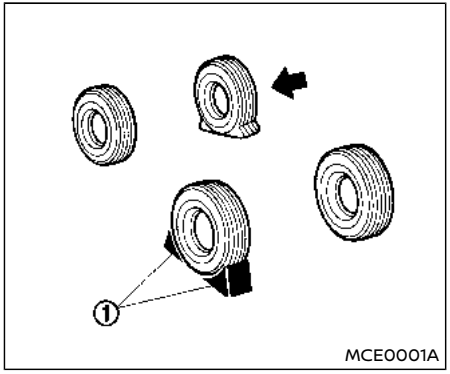


## Blocking wheels

Place suitable blocks ① at both the front and back of the wheel diagonally opposite the flat tire to prevent the vehicle from moving when it is jacked up.

**WARNING**

**Be sure to block the wheel as the vehicle may move and result in personal injury.**

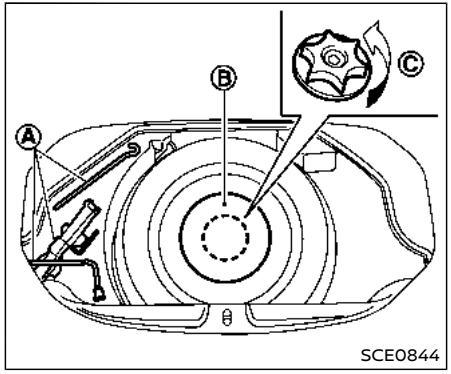


**Without subwoofer**

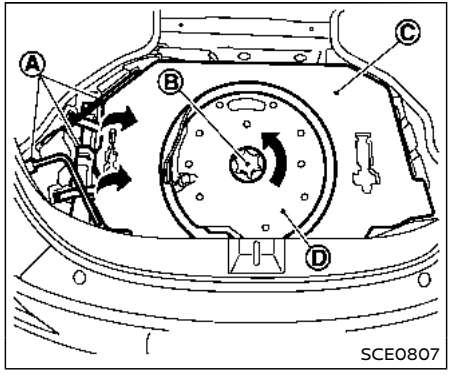


**With subwoofer**

## Getting the spare tire and tools

Remove jacking tools Ⓐ located under the cargo room/trunk as illustrated.

For Coupe models, unfasten the belts and lift the jack up to remove.

**Models without subwoofer:**

Remove the spacer Ⓑ, and turn the retainer Ⓒ counterclockwise, then remove the spare tire.

**Models with subwoofer:**

Remove the spare tire cover Ⓒ. Turn the retainer Ⓑ counterclockwise, remove the subwoofer Ⓓ and place it on the side of the cargo room (with the flat surface facing down), then carefully remove the spare tire.

## Jacking up the vehicle and removing the damaged tire

**WARNING**

- **Never get under the vehicle while it is supported only by the jack. If it is necessary to work under the vehicle, support it with safety stands.**
- **Use only the jack provided with your vehicle to lift the vehicle. Do not use the jack provided with your vehicle on other vehicles. The jack is designed for lifting only your vehicle during a tire change.**
- **Use the correct jack-up points. Never use any other part of the vehicle for jack support.**
- **Never jack up the vehicle more than necessary.**
- **Never use blocks on or under the jack.**
- **Do not start or run the engine while vehicle is on the jack, as it may cause the vehicle to move. This is especially true for vehicles with limited slip differentials.**
- **Do not allow passengers to stay in the vehicle while it is on the jack.**

**Carefully read the caution label attached to the jack body and the following instructions.**

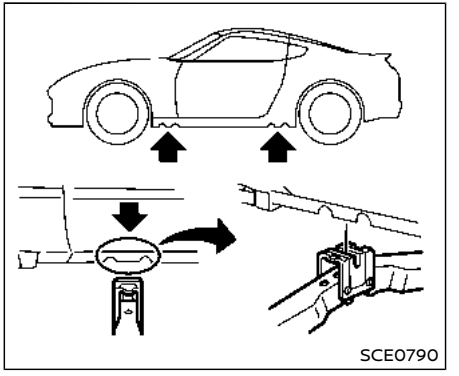


**Jack-up point**

1. Place the jack directly under the jack-up point as illustrated so the top of the jack contacts the vehicle at the jack-up point. Align the jack head between the two notches in the front or the rear as shown. Also fit the groove of the jack head between the notches as shown.

   **The jack should be used on level firm ground.**

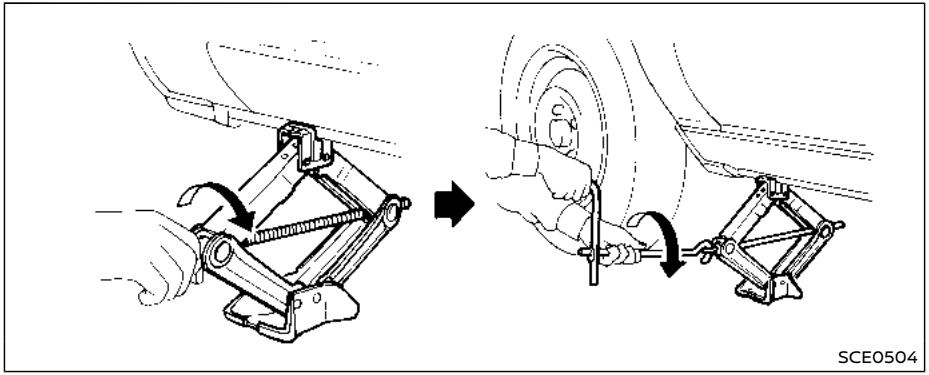


2. Loosen each wheel nut one or two turns by turning counterclockwise with the wheel nut wrench. **Do not remove the wheel nuts until the tire is off the ground.**
3. To lift the vehicle, securely hold the jack lever and rod with both hands as shown above. Carefully raise the vehicle until the tire clears the ground. Remove the wheel nuts, and then remove the tire.

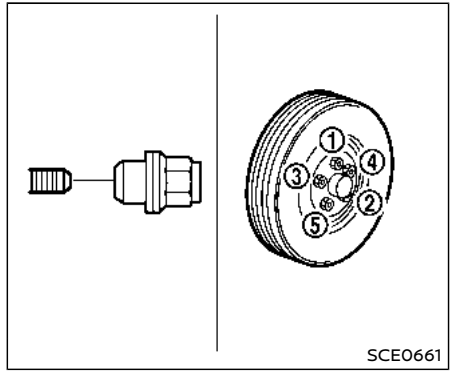


## Installing the spare tire

**The T-type spare tire is designed for emergency use. (See specific instructions under the heading "Wheels and tires" (P.8-26).)**

1. Clean any mud or dirt from the surface between the wheel and hub.
2. Carefully put the spare tire on and tighten the wheel nuts finger tight. Check that all the wheel nuts contact the wheel surface horizontally.

   **Models equipped with different sized tires in the front and rear:**

   When replacing a front tire, make sure that the hole in the spare tire wheel is

aligned with the pin on the brake rotor.

3. With the wheel nut wrench, tighten wheel nuts alternately and evenly in the sequence illustrated (①, ②, ③, ④, ⑤) until they are tight.
4. Lower the vehicle slowly until the tire touches the ground. Then, with the wheel nut wrench, tighten the wheel nuts securely in the sequence as illustrated. Lower the vehicle completely.

**WARNING**

- **Incorrect wheel nuts or improperly tightened wheel nuts can cause the wheel to become loose or come off. This could cause an accident.**
- **Do not use oil or grease on the wheel studs or nuts. This could cause the nuts to become loose.**
- **Retighten the wheel nuts when the vehicle has been driven for 600 miles (1,000 km) (also in cases of a flat tire, etc.).**

- **As soon as possible, tighten the wheel nuts to the specified torque with a torque wrench.**

  **Wheel nut tightening torque:**
  **80 ft-lb (108 N·m)**

  **The wheel nuts must be kept tightened to specification at all times. It is recommended that wheel nuts be tightened to specifications at each lubrication interval.**
- **Adjust tire pressure to the COLD pressure.**

  **COLD pressure:**

  **After the vehicle has been parked for three hours or more or driven less than 1 mile (1.6 km).**

  **COLD tire pressures are shown on the Tire and Loading Information label affixed to the driver side center pillar.**

## Stowing the damaged tire and tools

**Coupe models:**

1. Securely store the damaged tire and jacking tools in the storage area.
2. Place the spare tire cover and the cargo room carpet over the damaged tire.
3. Close the rear hatch.

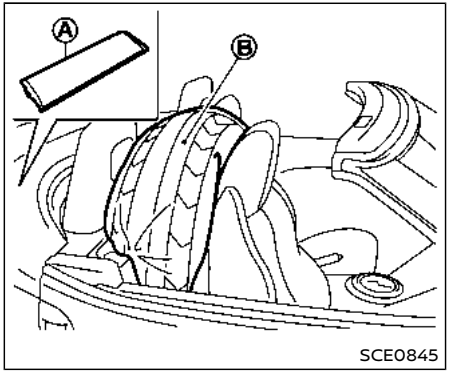


**Roadster models:**

Securely store the jacking tools in the storage area.

Place the spare tire cover and trunk room carpet back in the trunk, and then close the trunk lid.

Securely store the damaged tire according to the following procedure as illustrated.

1. Put the damaged tire in the plastic bag Ⓐ stored in the trunk.
2. Move the passenger seat forward, and then place the damaged tire Ⓑ wrapped in the plastic bag behind the seat.

3. Move the passenger seat backward to secure the damaged tire.

**WARNING**

- **Always make sure that the spare tire and jacking equipment are properly secured after use. Such items can become dangerous projectiles in an accident or sudden stop.**
- **The spare tire is designed for emergency use. See specific instructions under the heading "Wheels and tires" (P.8-26).**

## REPAIRING FLAT TIRE (for models with emergency tire puncture repair kit)

**WARNING**

- **After using Emergency Tire Sealant to repair a minor tire puncture, do not drive the vehicle at speeds faster than 50 MPH (80 km/h).**
- **Immediately after using the Emergency Tire Sealant to repair a minor tire puncture, take your vehicle to inspect, and repair or replace the tire. It is recommended you visit a NISSAN dealer for this service. The Emergency Tire Sealant cannot permanently seal a punctured tire. Continuing operation of the vehicle without a permanent tire repair can lead to a crash.**
- **NISSAN recommends using only Genuine NISSAN Emergency Tire Sealant provided with your vehicle. Other tire sealants may damage the valve stem seal which can cause the tire to lose air pressure. It is recommended you visit a NISSAN dealer as soon as possible after using tire repair sealant.**

This vehicle does not have a spare tire. The emergency tire puncture repair kit (Emergency Tire Sealant) is supplied with the vehicle instead of a spare tire. It can be used to temporarily repair minor tire punctures.

If possible, have the vehicle towed to a facility that can repair or replace the flat tire. Using the emergency tire puncture repair kit may cause a malfunction of the tire pressure sensor and cause the low tire pressure warning light to illuminate.

If you have a flat tire, follow the instructions below.

**CAUTION**

- **To avoid the emergency tire puncture repair kit being damaged during storage or use:**
  - **Only use the emergency tire puncture repair kit on your vehicle. Do not use it on other vehicles.**
  - **Only use the kit to inflate the tires of your vehicle and to check the vehicle's tire pressure.**
  - **Only plug the compressor into a 12V DC car power point.**
  - **Keep the kit free of water and dirt.**
  - **Do not disassemble or modify the kit.**
  - **Do not drop the kit or allow hard impacts to the kit.**
- **Do not use the emergency tire puncture repair kit under the following conditions. It is recommended you visit a NISSAN dealer or professional road assistance.**

**— when the sealant has passed its expiration date (shown on the label attached to the bottle)**

**— when the cut or the puncture is approximately 0.25 in (6 mm) or longer**

**— when the tire sidewall is damaged**

**— when the vehicle has been driven with extremely low tire pressure**

**— when the tire has come off the inside or the outside of the wheel.**

**— when the tire wheel is damaged**

**— when two or more tires are flat**

## Stopping the vehicle

1. Safely move the vehicle off the road and away from traffic.
2. Turn on the hazard warning flashers.
3. Park on a level surface and apply the parking brake.
4. **Automatic Transmission models:**

   Move the shift lever to the P (Park) position.

   **Manual Transmission models:**

   Move the shift lever to the R (Reverse) position.
5. Turn off the engine.
6. Raise the hood to warn other traffic and to signal professional road assistance personnel that you need assistance.
7. Have all passengers get out of the vehicle and stand in a safe place, away from traffic and clear of the vehicle.

**WARNING**

**Make sure the parking brake is securely applied and the manual transmission is shifted into R (Reverse) or the automatic transmission into P (Park).**

- **Never repair tires when the vehicle is on a slope, ice or slippery areas. This is hazardous.**
- **Never repair tires if oncoming traffic is close to your vehicle. Wait for professional road assistance.**

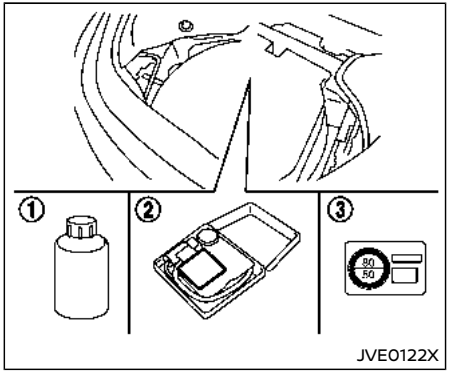


## Getting emergency tire puncture repair kit

Take out the emergency tire puncture repair kit located under the cargo room or in the trunk. The repair kit consists of the following items:

① Tire sealant bottle

② Air compressor*

③ Speed restriction sticker

*: The compressor shape may differ depending on the models.

**NOTE:**

**For models with the emergency tire puncture repair kit, a spare tire, jack and rod are not equipped as standard.**

**These parts are dealer options. Contact a NISSAN dealer about obtaining these parts. See "Changing a flat tire (for models with spare tire)" (P.6-4) for usage of jacking tools and tire replacement.**

### Before using emergency tire puncture repair kit

- If any foreign object (for example, a screw or nail) is embedded in the tire, do not remove it.
- Check the expiration date of the sealant (shown on the label attached to the bottle). Never use a sealant whose expiration date has passed.

### Repairing tire

**WARNING**

**Observe the following precautions when using the tire repair compound.**

- **Swallowing the compound is dangerous. Immediately drink as much water as possible and seek prompt medical assistance.**
- **Rinse well with lots of water if the compound comes into contact with skin or eyes. If irritation persists, seek prompt medical attention.**
- **Keep the repair compound out of the reach of children.**
- **The emergency repair compound may cause a malfunction of the tire pressure sensors and cause the low tire pressure warning light to illuminate. Have the tire pressure sensor replaced as soon as possible.**

**NOTE:**

**Do not remove any nails or screws that have penetrated the tire when performing repairs.**

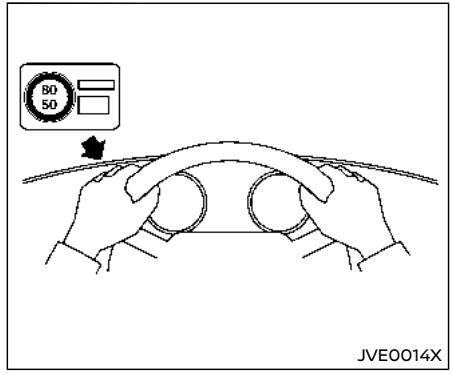


1. Take out the speed restriction sticker from the air compressor*, then put it in a location where the driver can see it while driving.

   *: The compressor shape may differ depending on the models.

**CAUTION**

**Do not put the speed restriction label on the steering wheel pad, the speedometer or the warning light locations.**

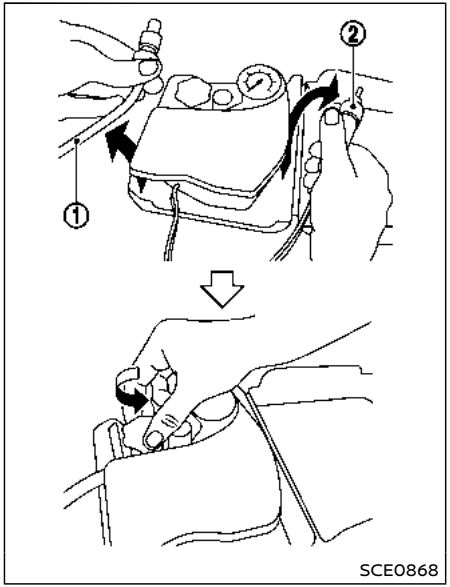


2. Take the hose ① and the power plug ② out of the air compressor. Remove the cap of the bottle holder from the air compressor.

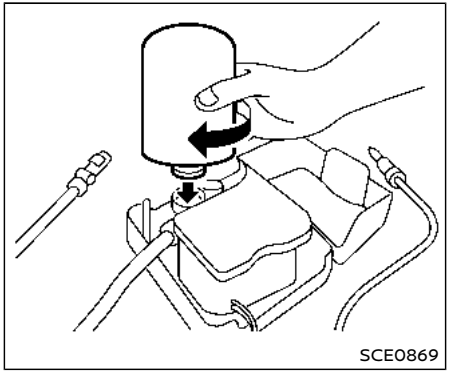


3. Remove the cap from the tire sealant bottle, and screw the bottle clockwise onto the bottle holder. (Leave the bottle seal intact. Screwing the bottle onto the bottle holder will pierce the seal of the bottle.)
4. Remove the cap from the tire valve on the flat tire.

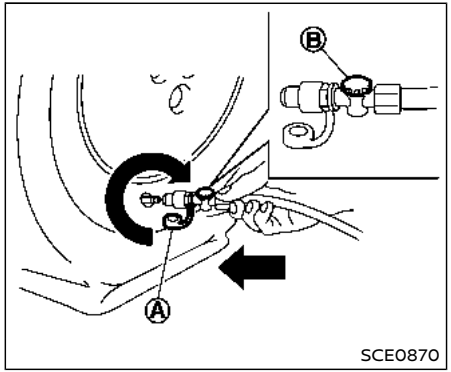


5. Remove the protective cap Ⓐ of the hose and screw the hose securely onto the tire valve. Make sure that the pressure release valve Ⓑ is securely tightened. Make sure that the air compressor switch is in the OFF (○) position, and then insert its power plug into the power outlet in the vehicle.

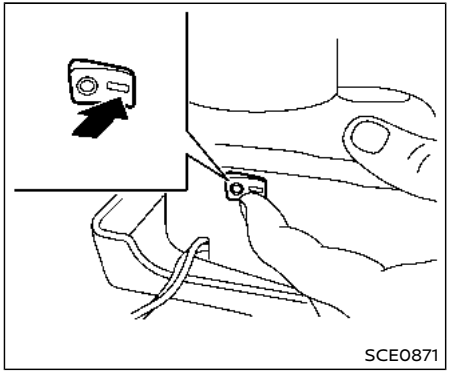


6. Push the ignition switch to the "ACC" position. Then turn the compressor switch to the ON (–) position and inflate the tire up to the pressure that is specified on the tire and loading information label affixed to the driver's side center pillar if possible, or to the minimum of 26 psi (180 kPa). Turn the air compressor off briefly in order to check the tire pressure with the pressure gauge.

   If the tire is inflated to higher than the specified pressure, lower the tire pressure by releasing air with the pressure release valve.

**NOTE:**
**The compressor tire pressure gauge may show a pressure reading of 87 psi (600 kPa) for about 30 seconds while inflating the tire. The pressure gauge is indicating the pressure inside the sealant can. When the sealant has been injected into the tire the pressure gauge will drop and indicate actual tire pressure.**

**WARNING**

- **To avoid serious personal injury while using the emergency tire puncture repair kit:**
  - **Securely tighten the compressor hose to the tire valve. Failure to do so can cause the sealant to spray into the air and get into your eyes or on the skin.**
- **Do not stand directly beside the damaged tire while it is being inflated because of the risk of the rupture. If there are any cracks or bumps, turn the compressor off immediately.**

If the tire pressure does not increase to **26 psi (180 kPa) within 10 minutes**, the tire may be seriously damaged and **the tire cannot be repaired with this tire repair kit.** It is recommended you visit a NISSAN dealer for servicing.

7. When the tire pressure is at the specified amount, turn the air compressor off. If the pressure cannot be inflated to the specified amount, the air compressor can be turned off at the minimum of 26 psi (180 kPa). Remove the power plug from the power outlet and quickly remove the hose from the tire valve. Attach the protective cap and valve cap. Properly stow the emergency tire puncture repair kit in the trunk.

**CAUTION**

**To avoid serious personal injury when stowing the emergency tire puncture repair kit:**

- **Keep the sealant bottle screwed into the compressor. Failure to do so can cause the sealant to spray into the air and get into your eyes or on the skin.**

8. Immediately drive the vehicle for 10 minutes or 2 miles (3 km) at a speed of 50 MPH (80 km/h) or less.

9. After driving, make sure that the air compressor switch is in the OFF position, then screw the hose securely onto the tire valve. Check the tire pressure with the pressure gauge. The temporary repair is completed if the tire pressure does not drop.

   Make sure the pressure is adjusted to the pressure that is specified on the tire and loading information label before driving.

10. If the tire pressure drops, repeat the steps from 5 to 9. If the pressure drops again or under 19 psi (130 kPa), **the tire cannot be repaired with this tire repair kit.** It is recommended you visit a NISSAN dealer for this servicing.

    The sealant bottle and hose can not be reused to repair another punctured tire. It is recommended you visit a NISSAN dealer to purchase replacements.

## After repairing tire

It is recommended you visit a NISSAN dealer for tire repair/replacement as soon as possible.

**WARNING**

- **After using Emergency Tire Sealant to repair a minor tire puncture, do not drive the vehicle at speeds faster than 50 MPH (80 km/h).**
- **Immediately after using Emergency Tire Sealant to repair a minor tire puncture, take your vehicle to inspect, and repair or replace the tire. It is recommended you visit a NISSAN dealer for this service. The Emergency Tire Sealant cannot permanently seal a punctured tire. Continuing operation of the vehicle without a permanent tire repair can lead to a crash.**
- **NISSAN recommends using only Genuine NISSAN Emergency Tire Sealant provided with your vehicle. Other tire sealants may damage the valve stem seal which can cause the tire to lose air pressure. It is recommended you visit a NISSAN dealer as soon as possible after using tire repair sealant.**

## JUMP STARTING

To start your engine with a booster battery, the instructions and precautions below must be followed.

**WARNING**

- **If done incorrectly, jump starting can lead to a battery explosion, resulting in severe injury or death. It could also damage your vehicle.**
- **Explosive hydrogen gas is always present in the vicinity of the battery. Keep all sparks and flames away from the battery.**
- **Do not allow battery fluid to come into contact with eyes, skin, clothing or painted surfaces. Battery fluid is a corrosive sulphuric acid solution which can cause severe burns. If the fluid should come into contact with anything, immediately flush the contacted area with water.**
- **Keep the battery out of the reach of children.**
- **The booster battery must be rated at 12 volts. Use of an improperly rated battery can damage your vehicle.**
- **Whenever working on or near a battery, always wear suitable eye protectors (for example, goggles or industrial safety spectacles) and remove rings, metal bands, or any other jewelry. Do not lean over the battery when jump starting.**
- **Do not attempt to jump start a frozen battery. It could explode and cause serious injury.**
- **Your vehicle has an automatic engine cooling fan. It could come on at any time. Keep hands and other objects away from it.**

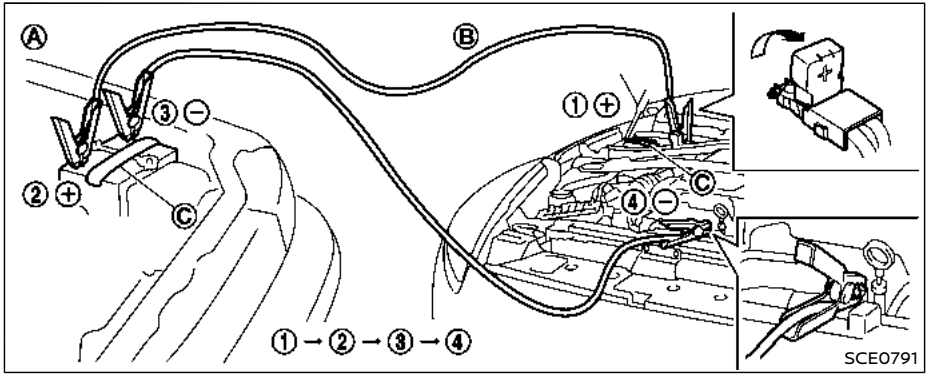


## WARNING

**Always follow the instructions below. Failure to do so could result in damage to the charging system and cause personal injury.**

1. If the booster battery is in another vehicle Ⓐ, position the two vehicles (Ⓐ and Ⓑ) to bring their batteries into close proximity to each other.

   **Do not allow the two vehicles to touch.**

2. Apply parking brake. Move the shift lever to the P (Park) position (Automatic transmission models). Move the shift lever to the N (Neutral) position (Manual transmission models). Switch off all unnecessary electrical systems (light, heater, air conditioner, etc.).
3. Remove vent caps on the battery (if so equipped). Cover the battery with a firmly wrung out moist cloth Ⓒ to reduce explosion hazard.
4. Connect jumper cables in the sequence as illustrated (① → ② → ③ → ④).

## CAUTION

- **Always connect positive (+) to positive (+) and negative (–) to body ground (as illustrated) — not to the battery.**
- **Make sure the jumper cables do not touch moving parts in the engine compartment and that clamps do not contact any other metal.**

5. Start the engine of the booster vehicle Ⓐ and let it run for a few minutes.
6. Keep the engine speed of the booster vehicle Ⓐ at about 2,000 rpm, and start the engine of the vehicle being jump started Ⓑ.

## CAUTION

**Do not keep the starter motor engaged for more than 10 seconds. If the engine does not start right away, push the ignition switch to the OFF position and wait 10 seconds before trying again.**

7. After starting your engine, carefully disconnect the negative cable and then the positive cable (④ → ③ → ② → ①).
8. Replace the vent caps (if so equipped). Be sure to dispose of the cloth used to cover the vent holes as it may be contaminated with corrosive acid.
9. Put the battery cover on.

## PUSH STARTING

Do not attempt to start the engine by pushing.

**CAUTION**

- **Automatic transmission models cannot be push-started or tow-started. Attempting to do so may cause transmission damage.**
- **Three way catalyst equipped models should not be started by pushing since the three way catalyst may be damaged.**
- **Never try to start the vehicle by towing it; when the engine starts, the forward surge could cause the vehicle to collide with the tow vehicle.**

## IF YOUR VEHICLE OVERHEATS

**CAUTION**

- **Do not continue to drive if your vehicle overheats. Doing so could cause engine damage or a vehicle fire.**
- **To avoid the danger of being scalded, never remove the radiator cap while the engine is still hot. When the radiator cap is removed, pressurized hot water will spurt out, possibly causing serious injury.**
- **Do not open the hood if steam is coming out.**

If your vehicle is overheating (indicated by an extremely high temperature gauge reading), or if you feel a lack of engine power, detect abnormal noise, etc., take the following steps:

1. Move the vehicle safely off the road, apply the parking brake and move the shift lever to the P (Park) position (Automatic transmission models). Move the shift lever to the N (Neutral) position (Manual transmission models).

   **Do not stop the engine.**

2. Turn off the air conditioner. Open all the windows, move the heater or air conditioner temperature control to maximum hot and fan control to high speed.
3. If engine overheating is caused by climbing a long hill on a hot day, run the engine at a fast idle (approximately 1,500 rpm) until the temperature gauge indication returns to normal.
4. Get out of the vehicle. Look and listen for steam or coolant escaping from the radiator before opening the hood. (If steam or coolant is escaping, turn off the engine.) Do not open the hood further until no steam or coolant can be seen.
5. Open the engine hood.

**WARNING**

**If steam or water is coming from the engine, stand clear to prevent getting burned.**

6. Visually check if the cooling fan is running. The radiator hoses and radiator should not leak water. If coolant is leaking or the cooling fan does not run, stop the engine.

**WARNING**

**Be careful not to allow your hands, hair, jewelry or clothing to come into contact with, or get caught in, engine belts or the engine cooling fan. The engine cooling fan can start at any time.**

7. After the engine cools down, check the coolant level in the reservoir with the engine running. Add coolant to the reservoir if necessary. Have your vehicle repaired. It is recommended you visit a NISSAN dealer for this service.

## TOWING YOUR VEHICLE

When towing your vehicle, all State (Provincial in Canada) and local regulations for towing must be followed. Incorrect towing equipment could damage your vehicle. Towing instructions are available from a NISSAN dealer. Local service operators are familiar with the applicable laws and procedures for towing. To assure proper towing and to prevent accidental damage to your vehicle, NISSAN recommends that you have a service operator tow your vehicle. It is advisable to have the service operator carefully read the following precautions.

**WARNING**

- **Never ride in a vehicle that is being towed.**
- **Never get under your vehicle after it has been lifted by a tow truck.**

**CAUTION**

- **When towing, make sure that the transmission, axles, steering system and drivetrain are in working condition. If any unit is damaged, dollies must be used.**
- **Always attach safety chains before towing.**

For information about towing your vehicle behind a recreational vehicle (RV), see "Flat towing" (P.10-22) of this manual.

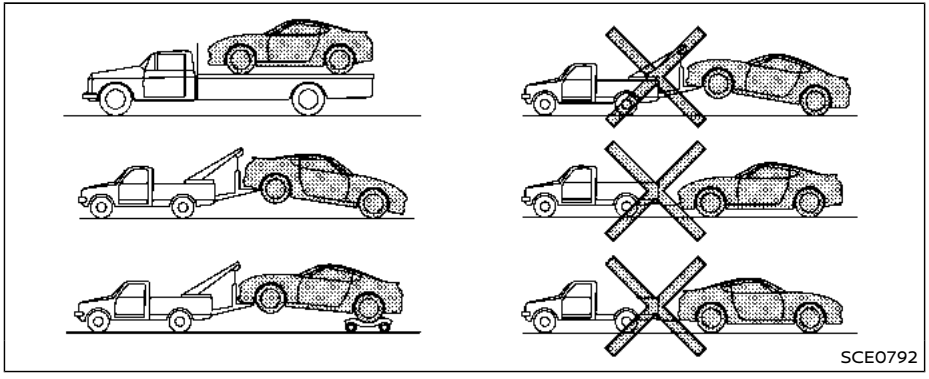


## TOWING AUTOMATIC TRANSMISSION RECOMMENDED BY NISSAN (except for NISMO models)

NISSAN recommends that your vehicle be towed with the driving (rear) wheels off the ground or place the vehicle on a flat bed truck as illustrated.

**CAUTION**

- **Never tow automatic transmission models with the rear wheels on the ground or four wheels on the ground (forward or backward), as this may cause serious and expensive damage to the drivetrain. If it is necessary to tow the vehicle with the front wheels raised, always use towing dollies under the rear wheels.**
- **When towing rear wheel drive models with the front wheels on the ground or on towing dollies: Push the ignition switch to the ACC or ON position, and secure the steering wheel in a straight-ahead position with a rope or similar device.**

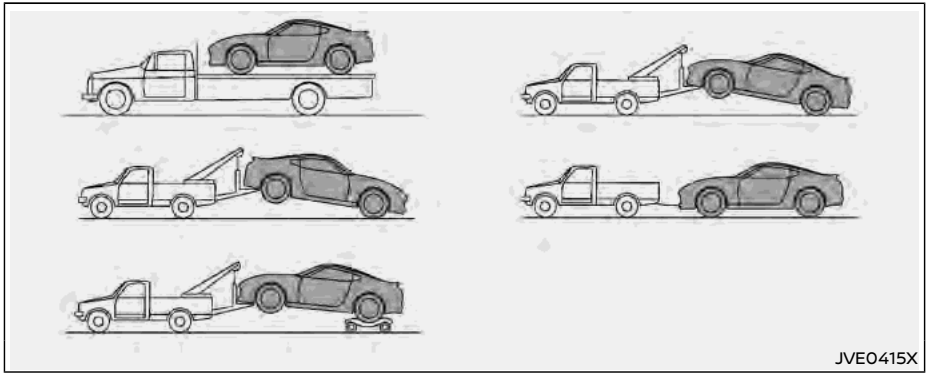


## TOWING MANUAL TRANSMISSION RECOMMENDED BY NISSAN (except for NISMO models)

NISSAN recommends that your vehicle be towed with the driving (rear) wheels off the ground or place the vehicle on a flat bed truck as illustrated.

**CAUTION**

**If you have to tow manual transmission models with the rear wheels on the ground (if you do not use towing dollies) or four wheels on the ground:**

- **Push the ignition switch to the ON position and turn off all accessories.**
- **Always release the parking brake.**
- **Move the transmission shift lever to the N (Neutral) position.**
- **Observe the following restricted towing speeds and distances for manual transmission models only:**
  - **Rear wheels on the ground:**
    **Speed: Below 50 MPH (80 km/h)**
    **Distance: Less than 50 miles (80 km)**
  - **Four wheels on the ground:**
    **Speed: Below 70 MPH (112 km/h)**
    **Distance: Less than 500 miles (800 km)**
- **If the speed or distance must necessarily be greater, remove the propeller shaft before towing to prevent damage to the drivetrain.**

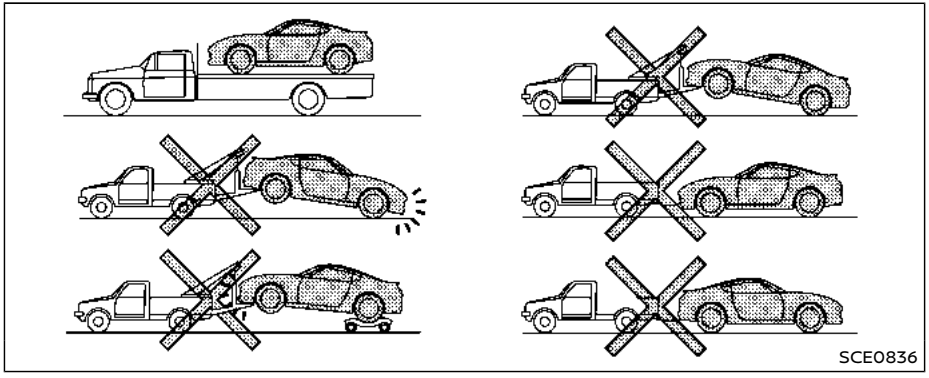


## TOWING RECOMMENDED BY NISSAN (NISMO models)

**CAUTION**

**Do not tow NISMO models with any wheel on the ground, or with the front or rear wheels raised, because this may cause damage to the front bumper with an aerodynamic splitter, rear bumper with an aerodynamic diffuser or exhaust pipes.**

NISSAN recommends that you place the vehicle on a flatbed truck as illustrated.

## VEHICLE RECOVERY (freeing a stuck vehicle)

**WARNING**

**To avoid vehicle damage, serious personal injury or death when recovering a stuck vehicle:**

- **Contact a professional towing service to recover the vehicle if you have any questions regarding the recovery procedure.**
- **Tow chains or cables must be attached only to main structural members of the vehicle.**
- **Do not use the vehicle tie-downs to tow or free a stuck vehicle.**
- **Only use devices specifically designed for vehicle recovery and follow the manufacturer's instructions.**
- **Always pull the recovery device straight out from the front of the vehicle. Never pull at an angle.**
- **Route recovery devices so they do not touch any part of the vehicle except the attachment point.**

If your vehicle is stuck in sand, snow, mud, etc., use a tow strap or other device designed specifically for vehicle recovery. Always follow the manufacturer's instructions for the recovery device.

### Rocking a stuck vehicle

If your vehicle is stuck in sand, snow, mud, etc., use the following procedure:

1. Turn off the Vehicle Dynamic Control (VDC) system.
2. Make sure the area in front and behind the vehicle is clear of obstructions.
3. Turn the steering wheel right and left to clear an area around the front tires.

4. Slowly rock the vehicle forward and backward.
   - Shift back and forth between R (Reverse) and D (Drive) (automatic transmission models) or 1st and R (Reverse) (manual transmission models).
   - Apply the accelerator as little as possible to maintain the rocking motion.
   - Release the accelerator pedal before shifting between R (Reverse) and D (Drive) (automatic transmission models) or 1st and R (Reverse) (manual transmission models).
   - Do not spin the tires above 35 MPH (55 km/h).
5. If the vehicle cannot be freed after a few tries, contact a professional towing service to remove the vehicle.

**WARNING**

- **Stand clear of a stuck vehicle.**
- **Do not spin your tires at high speed. This could cause them to explode and result in serious injury. Parts of your vehicle could also overheat and be damaged.**

**MEMO**

# 7 Appearance and care


Cleaning exterior ..... 7-2
Washing ..... 7-2
Soft top care and cleaning (Roadster models) ..... 7-3
Waxing ..... 7-4
Removing spots ..... 7-4
Underbody ..... 7-4
Glass ..... 7-4
Wheels ..... 7-4
Chrome parts ..... 7-5
Tire dressing ..... 7-5
Cleaning interior ..... 7-5
Air fresheners ..... 7-6
Floor mats ..... 7-6
Seat belts ..... 7-7
Corrosion protection ..... 7-8
Most common factors contributing to vehicle corrosion ..... 7-8
Environmental factors influence the rate of corrosion ..... 7-8
To protect your vehicle from corrosion ..... 7-8

## CLEANING EXTERIOR

In order to maintain the appearance of your vehicle, it is important to take proper care of it.

To protect the paint surface, wash your vehicle as soon as you can:

- after a rainfall to prevent possible damage from acid rain
- after driving on coastal roads
- when contaminants such as soot, bird droppings, tree sap, metal particles or bugs get on the paint surface
- when dust or mud builds up on the surface

Whenever possible, store or park your vehicle inside a garage or in a covered area.

When it is necessary to park outside, park in a shady area or protect the vehicle with a body cover.

**Be careful not to scratch the paint surface when putting on or removing the body cover.**

### WASHING

Wash dirt off the vehicle with a wet sponge and plenty of water. Clean the vehicle thoroughly using a mild soap, a special vehicle soap or general purpose dishwashing liquid mixed with clean, lukewarm (never hot) water.

**CAUTION**

- **Do not use car washes that use acid in the detergent. Some car washes, especially brushless ones, use some acid for cleaning. The acid may react with some plastic vehicle components, causing them to crack. This could affect their appearance, and also could cause them not to function properly. Always check with your car wash to confirm that acid is not used.**
- **Do not wash the vehicle with strong household soap, strong chemical detergents, gasoline or solvents.**
- **Do not wash the vehicle in direct sunlight or while the vehicle body is hot, as the surface may become water-spotted.**
- **Avoid using tight-napped or rough cloths, such as washing mitts. Care must be taken when removing caked-on dirt or other foreign substances so the paint surface is not scratched or damaged.**
- **For models with decorative sticker, observe the following:**
  - **Wash dirt off the vehicle with a wet sponge and plenty of water. Then wipe the vehicle gently using a soft cloth.**
  - **Do not apply direct water pressure, such as high-pressure sprayer, on the vehicle body around the sticker. This may cause the sticker edges to peel away or come off from the vehicle.**
- **For Roadster models, observe the following:**
  - **Do not use an automatic car wash or a high pressure car wash. The soft top may be damaged.**
  - **Avoid applying direct water pressure, such as high pressured water from household hoses, on the lining of the soft top and vehicle body. Avoid applying continuous water on the parts around the soft top and the windows. These may cause water to leak into the inside of your vehicle.**

Rinse the vehicle thoroughly with plenty of clean water.

Inside flanges, seams and folds on the doors, hatches and hood are particularly vulnerable to the effects of road salt. Therefore, these areas must be regularly cleaned. Make sure that the drain holes in the lower edge of the door are open. Spray water under the body and in the wheel wells to loosen the dirt and wash away road salt.

Avoid leaving water spots on the paint surface by using a damp chamois to dry the vehicle.

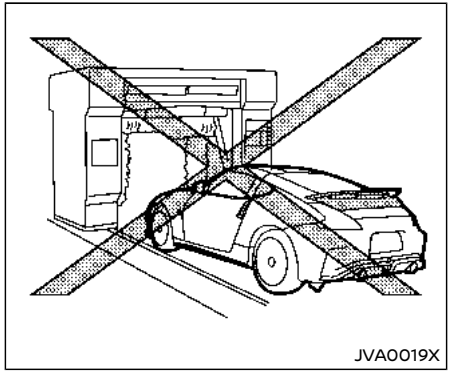


NISMO models

**CAUTION**

**Do not use an automatic car wash for NISMO models. The rear spoiler may be damaged.**

## SOFT TOP CARE AND CLEANING (Roadster models)

Proper care and handling should be observed to maintain a good appearance of the soft top. Improper care may cause the top cloth's surface to stiffen, stain, or mat. Follow the instructions shown in this section.

It is not necessary to wash the soft top every time you wash the vehicle body, but clean the top regularly before it becomes quite dirty. Leaving the soft top dirty or soiled for a long period will cause deterioration to the quality of the top material.

Remove dust or dirt on the soft top with a soft brush or sponge, then rinse it with plenty of clean water. When the top is quite dirty, wash using a mild detergent, such as a general cleaner especially made for a cloth top or a general purpose dishwashing liquid, mixed with clean, lukewarm (never hot) water. Rinse the top again with plenty of clean water to remove all traces of soap.

**CAUTION**

- **Do not use strong household soap, strong chemical detergents, gasoline or solvents.**

- **If glass cleaner gets on the soft top, immediately wash it off with clean water.**
- **Do not apply direct water pressure, such as high pressured water from household hoses, on the lining of the soft top and vehicle body, as this may cause water to leak into the inside of your vehicle.**

After cleaning, always be sure the top and its storage are completely **dry** before opening the top. Opening the top while it is wet or damp may cause interior water damage, water stains or mildew on the top.

## WAXING

Regular waxing protects the paint surface and helps retain new vehicle appearance. Polishing is recommended to remove built-up wax residue and to avoid a weathered appearance before reapplying wax.

A NISSAN dealer can assist you in choosing the proper product.

- Wax your vehicle only after a thorough washing. Follow the instructions supplied with the wax.
- Do not use a wax containing any abrasives, cutting compounds or cleaners that may damage the vehicle finish.

Machine compound or aggressive polishing on a base coat/clear coat paint finish may dull the finish or leave swirl marks.

## REMOVING SPOTS

Remove tar and oil spots, industrial dust, insects, and tree sap as quickly as possible from the paint surface to avoid lasting damage or staining. Special cleaning products are available at a NISSAN dealer or any automotive accessory stores.

## UNDERBODY

In areas where road salt is used in winter, the underbody must be cleaned regularly. This will prevent dirt and salt from building up and causing the acceleration of corrosion on the underbody and suspension. Before the winter period and again in the spring, the underseal must be checked and, if necessary, re-treated.

## GLASS

Use glass cleaner to remove smoke and dust film from the glass surfaces. It is normal for glass to become coated with a film after the vehicle is parked in the hot sun. Glass cleaner and a soft cloth will easily remove this film.

**CAUTION**

- **When cleaning the inside of the windows, do not use sharp-edged tools, abrasive cleaners or chlorine-based disinfectant cleaners. They could damage the electrical conductors, radio antenna elements or rear window defroster elements.**
- **If glass cleaner gets on the soft top, immediately wash it off with clean water (Roadster models).**

## WHEELS

Wash the wheels when washing the vehicle to maintain their appearance.

- Clean the inner side of the wheels when the wheel is changed or the underside of the vehicle is washed.
- Inspect wheel rims regularly for dents or corrosion. Such damage may cause loss of pressure or poor seal at the tire bead.
- NISSAN recommends that the road wheels be waxed to protect against road salt in areas where it is used during winter.

**CAUTION**

**Do not use abrasive cleaners when washing the wheels.**

### Aluminum alloy wheels

Wash regularly with a sponge dampened in a mild soap solution, especially during winter months in areas where road salt is used. Salt could discolor the wheels if not removed.

**CAUTION**

**Follow the directions below to avoid staining or discoloring the wheels:**

- **Do not use a cleaner that uses strong acid or alkali contents to clean the wheels.**
- **Do not apply wheel cleaners to the wheels when they are hot. The wheel temperature should be the same as ambient temperature.**
- **Rinse the wheel to completely remove the cleaner within 15 minutes after the cleaner is applied.**

### CHROME PARTS

Clean chrome parts regularly with a non-abrasive chrome polish to maintain the finish.

### TIRE DRESSING

NISSAN does not recommend the use of tire dressings. Tire manufacturers apply a coating to the tires to help reduce discoloration of the rubber. If a tire dressing is applied to the tires, it may react with the coating and form a compound. This compound may come off the tire while driving and stain the vehicle paint.

If you choose to use a tire dressing, take the following precautions:

- Use a water-based tire dressing. The coating on the tire dissolves more easily with an oil-based tire dressing.
- Apply a light coat of tire dressing to help prevent it from entering the tire tread/grooves (where it would be difficult to remove).
- Wipe off excess tire dressing using a dry towel. Make sure the tire dressing is completely removed from the tire tread/grooves.
- Allow the tire dressing to dry as recommended by tire dressing manufacturer.

## CLEANING INTERIOR

Occasionally remove loose dust from the interior trim, plastic parts and seats using a vacuum cleaner or soft bristled brush. Wipe the vinyl and leather surfaces with a clean, soft cloth dampened in mild soap solution, then wipe clean with a dry soft cloth.

Regular care and cleaning is required in order to maintain the appearance of the leather.

Before using any fabric protector, read the manufacturer's recommendations. Some fabric protectors contain chemicals that may stain or bleach the seat material.

Use a cloth dampened only with water, to clean the meter and gauge lens.

**WARNING**

**Do not use water or acidic cleaners (hot steam cleaners) on the seat. This can damage the seat or occupant classification sensor. This can also affect the operation of the air bag system and result in serious personal injury.**

**CAUTION**

- **Never use benzine, thinner, or any similar material.**
- **For cleaning, use a soft cloth, dampened with water. Never use a rough cloth, alcohol, benzine, thinner or any kind of solvent or paper towel with a chemical cleaning agent. They will scratch or cause discoloration to the lens.**
- **Do not spray any liquid such as water on the meter lens. Spraying liquid may cause the system to malfunction.**
- **Small dirt particles can be abrasive and damaging to the leather surfaces and should be removed promptly. Do not use saddle soap, car waxes, polishes, oils, cleaning fluids, solvents, detergents or ammonia-based cleaners as they may damage the leather's natural finish.**
- **Only use fabric protectors approved by NISSAN.**
- **Do not use glass or plastic cleaner on meter or gauge lens covers. It may damage the lens cover.**

## AIR FRESHENERS

Most air fresheners use a solvent that could affect the vehicle interior. If you use an air freshener, take the following precautions:

- Hanging-type air fresheners can cause permanent discoloration when they contact vehicle interior surfaces. Place the air freshener in a location that allows it to hang free and not contact an interior surface.
- Liquid-type air fresheners typically clip on the vents. These products can cause immediate damage and discoloration when spilled on interior surfaces.

Carefully read and follow the manufacturer's instructions before using air fresheners.

## FLOOR MATS

**WARNING**

**To avoid potential pedal interference that may result in a collision, injury or death:**

- **NEVER place a floor mat on top of another floor mat in the driver front position or install them upside down or backwards.**
- **It is recommended that you use only genuine NISSAN floor mats or equivalent floor mats that are specifically designed for use in your vehicle model and model year.**
- **Properly position the mats in the floorwell using the floor mat positioning hook. See "Floor mat installation" (P.7-7).**
- **Make sure the floor mat does not interfere with pedal operation.**
- **Periodically check the floor mats to make sure they are properly installed.**
- **After cleaning the vehicle interior, check the floor mats to make sure they are properly installed.**

The use of genuine NISSAN floor mats can extend the life of your vehicle carpet and make it easier to clean the interior. Mats should be maintained with regular cleaning and replaced if they become excessively worn.

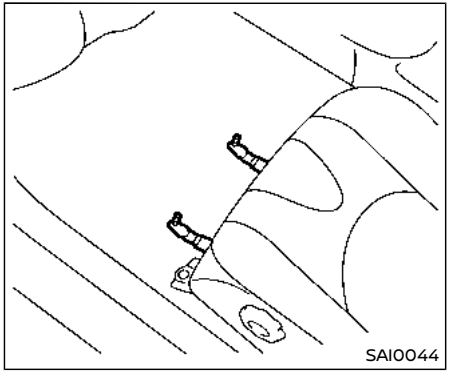


## Floor mat installation

Your vehicle is equipped with floor mat positioning hook(s). The number and shape of the floor mat positioning hook (s) for each seating position varies depending on the vehicle.

When installing genuine NISSAN floor mats, follow the installation instructions provided with the floor mat and the following:

1. Position the floor mat in the floorwell so that the mat grommet holes are aligned with the hook(s).
2. Secure the grommet holes into the hook(s) and ensure that the floor mat is properly positioned.
3. Make sure the floor mat does not interfere with pedal operation. With the ignition in the OFF position and the shift lever in the P (Park) position (Automatic Transmission models) or the shift lever in the N (Neutral) position (Manual Transmission models), fully apply and release all pedals. The floor mat must not interfere with pedal operation or prevent the pedal from returning to its normal position. See a NISSAN dealer for details about installing the floor mats in your vehicle.

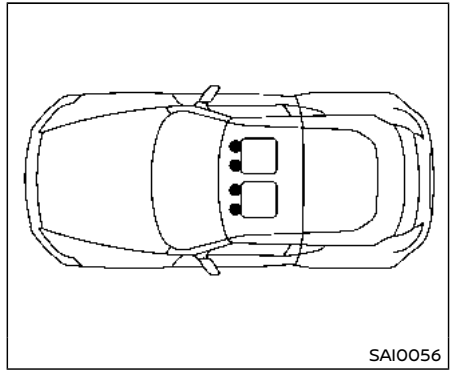


**Positioning hooks**

The illustration shows the location of floor mat positioning hooks.

## SEAT BELTS

The seat belts can be cleaned by wiping them with a sponge dampened in a mild soap solution. Allow the belts to dry completely in the shade before using them.

See “Seat belts” (P.1-10).

**WARNING**

**Do not allow wet seat belts to roll up in the retractor. NEVER use bleach,**

**dye, or chemical solvents to clean the seat belts, since these materials may severely weaken the seat belt webbing.**

## MOST COMMON FACTORS CONTRIBUTING TO VEHICLE CORROSION

- The accumulation of moisture-retaining dirt and debris in body panel sections, cavities, and other areas.
- Damage to paint and other protective coatings caused by gravel and stone chips or minor traffic accidents.

## ENVIRONMENTAL FACTORS INFLUENCE THE RATE OF CORROSION

### Moisture

Accumulation of sand, dirt and water on the vehicle body underside can accelerate corrosion. Wet floor coverings will not dry completely inside the vehicle, and should be removed for drying to avoid floor panel corrosion.

### Relative humidity

Corrosion will be accelerated in areas of high relative humidity, especially those areas where the temperatures stay above freezing where atmospheric pollution exists, or where road salt is used.

### Temperature

A temperature increase will accelerate the rate of corrosion to those parts which are not well ventilated.

### Air pollution

Industrial pollution, the presence of salt in the air in coastal areas, or heavy road salt use will accelerate the corrosion process. Road salt will also accelerate the disintegration of paint surfaces.

## TO PROTECT YOUR VEHICLE FROM CORROSION

- Wash and wax your vehicle often to keep the vehicle clean.
- Always check for minor damage to the paint and repair it as soon as possible.
- Keep drain holes at the bottom of the doors open to avoid water accumulation.
- Check the underbody for accumulation of sand, dirt or salt. If present, wash with water as soon as possible.

**CAUTION**

- **NEVER remove dirt, sand or other debris from the passenger compartment by washing it out with a hose. Remove dirt with a vacuum**

**cleaner.**

- **Never allow water or other liquids to come in contact with electronic components inside the vehicle as this may damage them.**

Chemicals used for road surface deicing are extremely corrosive. They accelerate corrosion and deterioration of underbody components such as the exhaust system, fuel and brake lines, brake cables, floor pan and fenders.

**In winter, the underbody must be cleaned periodically.**

For additional protection against rust and corrosion, which may be required in some areas, it is recommended you consult a NISSAN dealer.

**MEMO**

# 8 Do-it-yourself


Maintenance precautions ..... 8-2
Engine compartment check locations ..... 8-3
VQ37VHR engine model ..... 8-3
Engine cooling system ..... 8-4
Checking engine coolant level ..... 8-5
Changing engine coolant ..... 8-5
Engine oil ..... 8-6
Checking engine oil level ..... 8-6
Changing engine oil and filter ..... 8-6
Automatic Transmission Fluid (ATF) ..... 8-8
Power steering fluid ..... 8-8
Brake and clutch fluid ..... 8-9
Brake fluid ..... 8-9
Clutch fluid (Manual transmission models) ..... 8-10
Window washer fluid ..... 8-10
Battery ..... 8-11
Jump starting ..... 8-13
Variable voltage control system ..... 8-13
Drive belts ..... 8-14
Spark plugs ..... 8-14
Replacing spark plugs ..... 8-15
Air cleaner ..... 8-15
Windshield wiper blades ..... 8-16
Cleaning ..... 8-16
Replacing ..... 8-16
Brakes ..... 8-17
Self-adjusting brakes ..... 8-17
Brake pad wear warning ..... 8-17
Fuses ..... 8-18
Engine compartment ..... 8-18
Passenger compartment ..... 8-19
Intelligent Key battery replacement ..... 8-20
Lights ..... 8-22
Coupe ..... 8-22
Roadster ..... 8-23
Headlights ..... 8-23
Exterior and interior lights ..... 8-24
Wheels and tires ..... 8-26
Tire pressure ..... 8-26
Tire labeling ..... 8-30
Types of tires ..... 8-32
Tire chains ..... 8-33
Changing wheels and tires ..... 8-33
Emergency tire puncture repair kit (if so equipped) ..... 8-37

## MAINTENANCE PRECAUTIONS

When performing any inspection or maintenance work on your vehicle, always take care to prevent serious accidental injury to yourself or damage to the vehicle. The following are general precautions which should be closely observed.

### WARNING

- **Park the vehicle on a level surface, apply the parking brake securely and block the wheels to prevent the vehicle from moving. For manual transmission models, move the shift lever to N (Neutral). For automatic transmission models, move the shift lever to P (Park).**
- **Be sure the ignition switch is in the OFF or LOCK position when performing any parts replacement or repairs.**
- **Never connect or disconnect the battery or any transistorized component while the ignition switch is in the ON position.**
- **Never leave the engine or automatic transmission related component harnesses disconnected while the ignition switch is in the ON position.**
- **If you must work with the engine running, keep your hands, clothing, hair and tools away from moving fans, belts and any other moving parts.**
- **It is advisable to secure or remove any loose clothing and remove any jewelry, such as rings, watches, etc. before working on your vehicle.**
- **Always wear eye protection whenever you work on your vehicle.**
- **If you must run the engine in an enclosed space such as a garage, be sure there is proper ventilation for exhaust gases to escape.**
- **Never get under the vehicle while it is supported only by a jack. If it is necessary to work under the vehicle, support it with safety stands.**
- **Keep smoking materials, flame and sparks away from fuel tank and the battery.**
- **Your vehicle is equipped with an automatic engine cooling fan. It may come on at any time without warning, even if the ignition key is in the OFF position and the engine is not running. To avoid injury, always disconnect the negative battery cable before working near the fan.**
- **Because the fuel lines are under high pressure even when the engine is off, it is recommended you visit a NISSAN dealer for service of the fuel filter or fuel lines.**

### CAUTION

- **Do not work under the hood while the engine is hot. Turn the engine off and wait until it cools down.**
- **Avoid direct contact with used engine oil and coolant. Improperly disposed engine oil, coolant, and/or other vehicle fluids can damage the environment. Always conform to local regulations for disposal of vehicle fluid.**

This "8. Do-it-yourself" section gives instructions regarding only those items which are relatively easy for an owner to perform.

A genuine NISSAN Service Manual is also available. (See "Owner's Manual/Service Manual order information" (P.10-26).)

## ENGINE COMPARTMENT CHECK LOCATIONS

You should be aware that incomplete or improper servicing may result in operating difficulties or excessive emissions, and could affect your warranty coverage. **If in doubt about any servicing, it is recommended you have it done by a NISSAN dealer.**

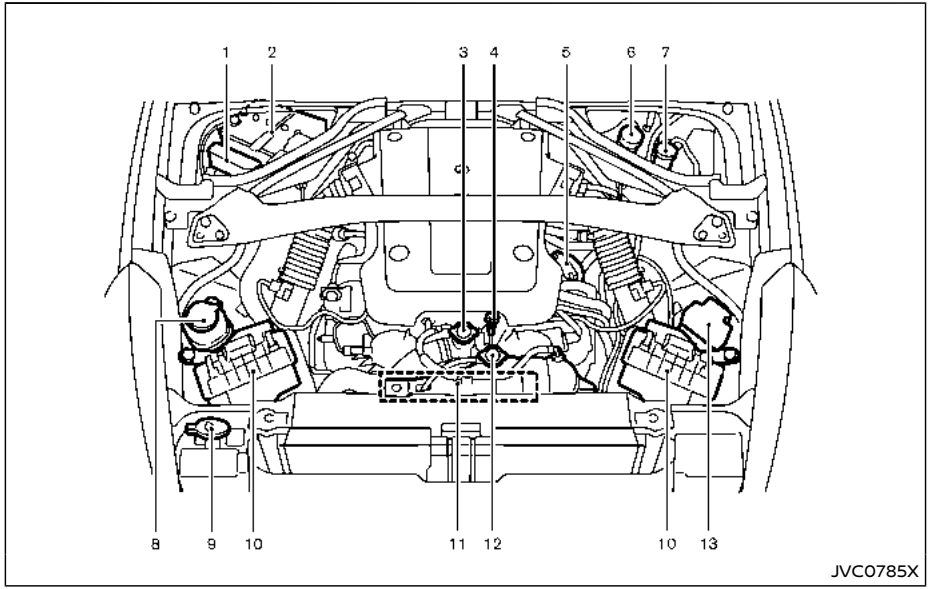


### VQ37VHR ENGINE MODEL

1. Fuse/fusible link holder
2. Battery
3. Radiator filler cap
4. Engine oil dipstick
5. Engine oil filler cap
6. Brake fluid reservoir
7. Clutch fluid reservoir (Manual Transmission models)
8. Power steering fluid reservoir
9. Window washer fluid reservoir
10 Air cleaner
11. Drive belt location
12. Engine coolant reservoir
13. Fuse/fusible link holder

## ENGINE COOLING SYSTEM

The engine cooling system is filled at the factory with a pre-diluted mixture of 50% Genuine NISSAN Long Life Antifreeze/ Coolant (blue) and 50% water to provide year-round anti-freeze and coolant protection. The antifreeze solution contains rust and corrosion inhibitors. Additional engine cooling system additives are not necessary.

**WARNING**

- **Never remove the radiator or coolant reservoir cap when the engine is hot. Wait until the engine and radiator cool down. Serious burns could be caused by high pressure fluid escaping from the radiator. See precautions in "If your vehicle overheats" (P.6-17) of this manual.**
- **The radiator is equipped with a pressure type radiator cap. To prevent engine damage, use only a genuine NISSAN radiator cap.**

**CAUTION**

- **Never use any cooling system additives such as radiator sealer. Additives may clog the cooling system and cause damage to the engine, transmission and/or cooling system.**
- **When adding or replacing coolant, be sure to use only Genuine NISSAN Long Life Antifreeze/ Coolant (blue) or equivalent. Genuine NISSAN Long Life Antifreeze/ Coolant (blue) is pre-diluted to provide antifreeze protection to −34°F (−37°C). If additional freeze protection is needed due to weather where you operate your vehicle, add Genuine NISSAN Long Life Antifreeze/Coolant (blue) concentrate following the directions on the container. If an equivalent coolant other than Genuine NISSAN Long Life Antifreeze/Coolant (blue) is used, follow the coolant manufacturer's instructions to maintain minimum antifreeze protection to −34°F (−37°C). The use of other types of coolant solutions other than Genuine NISSAN Long Life Antifreeze/Coolant (blue) or equivalent may damage the engine cooling system.**
- **The life expectancy of the factory-fill coolant is 105,000 miles (168,000 km) or 7 years. Mixing any other type of coolant other than Genuine NISSAN Long Life Antifreeze/Coolant (blue), including Genuine NISSAN Long Life Antifreeze/Coolant (green), or the use of non-distilled water will reduce the life expectancy of the factory-fill coolant. Refer to the "9. Maintenance and schedules" section of this manual for more details.**

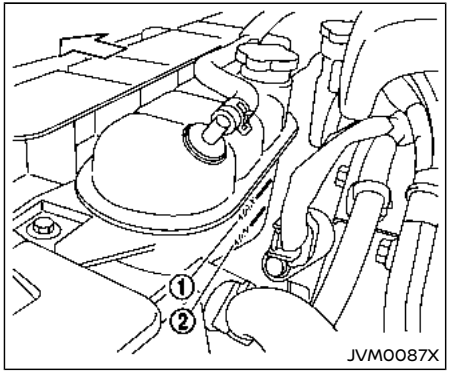


## CHECKING ENGINE COOLANT LEVEL

Check the coolant level **in the reservoir when the engine is running and after it reaches normal operating temperature**. If the coolant level is below the MIN level②, add coolant up to the MAX level①. If the reservoir is empty, check the coolant level **in the radiator when the engine is cold**. If there is insufficient coolant in the radiator, fill the radiator with coolant up to the radiator filler cap above the radiator upper hose opening and also add it to the reservoir up to the MAX level①. Put on the filler cap above the radiator upper hose and with the reservoir cap open, start the engine. Run the engine until it reaches normal operating temperature. Add coolant up to the MAX level①. Tighten the cap securely after adding engine coolant.

**If the cooling system requires coolant frequently, have it checked. It is recommended you visit a NISSAN dealer for this service.**

## CHANGING ENGINE COOLANT

It is recommended that major cooling system repairs be performed by a NISSAN dealer. The service procedures can be found in the appropriate NISSAN Service Manual.

**Improper servicing can result in reduced heater performance and engine overheating.**

### ⚠ WARNING

- **To avoid the danger of being scalded, never change the coolant when the engine is hot.**
- **Never remove the radiator cap when the engine is hot. Serious burns could be caused by high pressure fluid escaping from the radiator.**
- **Avoid direct skin contact with used coolant. If skin contact is made, wash thoroughly with soap or hand cleaner as soon as possible.**
- **Keep coolant out of reach of children and pets.**

Engine coolant must be disposed of properly. Check your local regulations.

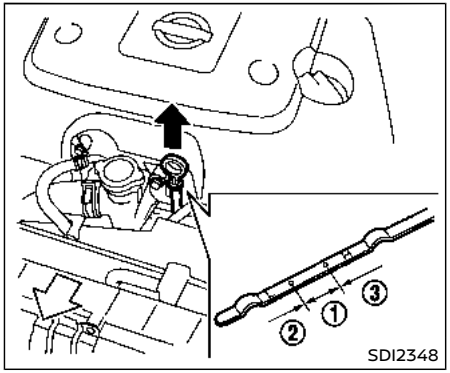


## CHECKING ENGINE OIL LEVEL

1. Park the vehicle on a level surface and apply the parking brake.
2. Run the engine until it reaches operating temperature.
3. Turn off the engine. **Wait more than 15 minutes for the oil to drain back into the oil pan.**
4. Remove the dipstick and wipe it clean. Reinsert it all the way.
5. Remove the dipstick again and check the oil level. It should be within the range ①. If the oil level is below ②, remove the oil filler cap and pour recommended oil through the opening. **Do not overfill ③.**
6. Recheck oil level with the dipstick.

**It is normal to add some oil between oil maintenance intervals or during the break-in period, depending on the severity of operating conditions.**

**CAUTION**

**Oil level should be checked regularly. Operating the engine with an insufficient amount of oil can damage the engine, and such damage is not covered by warranty.**

## CHANGING ENGINE OIL AND FILTER

### Vehicle set-up

1. Park the vehicle on a level surface and apply the parking brake.
2. Run the engine until it reaches operating temperature.
3. Turn the engine off and wait more than 15 minutes.
4. Raise and support the vehicle using a suitable floor jack and safety jack stands.
   - Place the safety jack stands under the vehicle jack-up points.
   - A suitable adapter should be attached to the jack stand saddle.
5. Remove the plastic engine undercover.
   a. Remove the small plastic clips at the center of the undercover.
   b. Then remove the bolts that hold the undercover in place.

**CAUTION**

**Make sure the correct lifting and support points are used to avoid vehicle damage.**

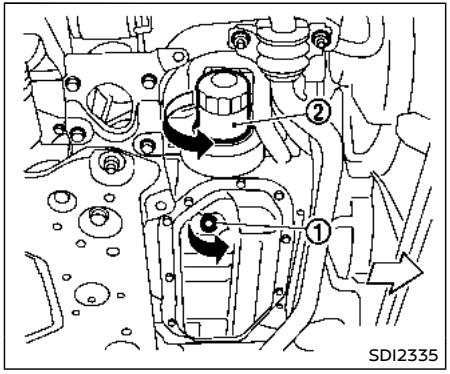


## Engine oil and filter

1. Place a large drain pan under the drain plug.
2. Remove the oil filler cap.
3. Remove the drain plug ① with a wrench and completely drain the oil.

**CAUTION**

**Be careful not to burn yourself, as the engine oil is hot.**

- **Waste oil must be disposed of properly.**
- **Check your local regulations.**

(Perform steps 4 to 7 only when the engine oil filter change is needed.)

4. Loosen the oil filter ② with an oil filter wrench. Remove the oil filter by turning it by hand.
5. Wipe the engine oil filter mounting surface with a clean rag.

**CAUTION**

**Be sure to remove any old rubber gasket remaining on the mounting surface of the engine. Failure to do so could lead to engine damage.**

6. Coat the gasket on the new filter with clean engine oil.
7. Screw in the oil filter clockwise until a slight resistance is felt, then tighten additionally more than 2/3 turn.

   **Oil filter tightening torque:**
   **11 to 15 ft-lb**
   **(14.7 to 20.5 N·m)**

8. Clean and re-install the drain plug with a new washer. Securely tighten the drain plug with a wrench.

   **Drain plug tightening torque:**
   **22 to 29 ft-lb**
   **(29 to 39 N·m)**

   Do not use excessive force.
9. Refill engine with recommended oil through the oil filler opening, and install the oil filler cap securely.

   See "Capacities and recommended fluids/lubricants" (P.10-2) for drain and refill capacity. The drain and refill capacity depends on the oil temperature and drain time. Use these specifications for reference only. Always use the dipstick to determine the proper amount of oil in the engine.
10. Start the engine and check for leakage around the drain plug and the oil filter. Correct as required.
11. Turn the engine off and wait more than 15 minutes. Check the oil level with the dipstick. Add engine oil if necessary.

## After the operation

1. Install the engine undercover into position as the following steps.
   a. Pull the center of the small plastic clip out.
   b. Hold the engine undercover into position.
   c. Insert the clip through the undercover into the hole in the frame, then push the center of the clip in to lock the clip in place.

d. Install the bolts that hold the undercover in place. Be careful not to strip the bolts or over-tighten them.

2. Lower the vehicle carefully to the ground.
3. Dispose of waste oil and filter properly.

**WARNING**

- **Prolonged and repeated contact with used engine oil may cause skin cancer.**
- **Try to avoid direct skin contact with used oil. If skin contact is made, wash thoroughly with soap or hand cleaner as soon as possible.**
- **Keep used engine oil out of reach of children.**

## AUTOMATIC TRANSMISSION FLUID (ATF)

When checking or replacement is required, we recommend a NISSAN dealer for servicing.

**CAUTION**

- **It is recommended that you use only Genuine NISSAN Matic S ATF. Do not mix with other fluids.**
- **Using automatic transmission fluid other than Genuine NISSAN Matic S ATF may cause deterioration in driveability and automatic transmission durability, and may damage the automatic transmission. Damage caused by the use of fluid other than as recommended is not covered by the NISSAN new vehicle limited warranty.**

## POWER STEERING FLUID

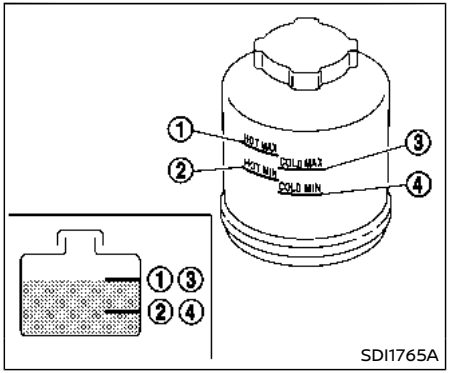


Check the fluid level in the reservoir.

The fluid level should be checked with the engine off using the HOT range (①: HOT MAX., ②: HOT MIN.) at fluid temperatures of 122 to 176°F (50 to 80°C) or using the COLD range (③: COLD MAX., ④: COLD MIN.) at fluid temperatures of 32 to 86°F (0 to 30°C).

If the fluid is below the MIN line, add Genuine NISSAN PSF or equivalent. Remove the cap and fill through the opening.

## BRAKE AND CLUTCH FLUID

**CAUTION**

- **Do not overfill.**
- **Use Genuine NISSAN PSF or equivalent.**

For further brake and clutch fluid information, see "Capacities and recommended fluids/lubricants" (P.10-2) of this manual.

**WARNING**

- **Use only new fluid from a sealed container. Old, inferior or contaminated fluid may damage the brake and clutch systems. The use of improper fluids can damage the brake and clutch systems, and affect the vehicle's stopping ability.**
- **Clean the filler cap before removing.**
- **Brake fluid and clutch fluid are poisonous and should be stored carefully in marked containers out of the reach of children.**

**CAUTION**

**Do not spill the fluid on painted surfaces. This will damage the paint. If fluid is spilled, wash the surface with water.**

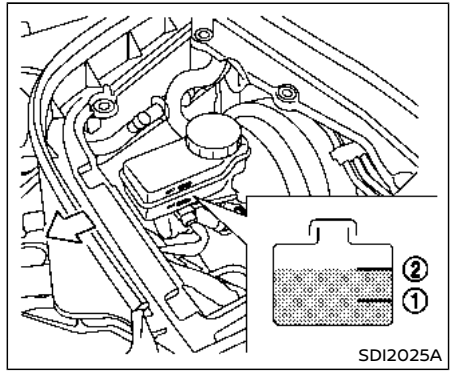


### BRAKE FLUID

Check the fluid level in the reservoir. If the fluid is below the MIN line ① or the brake warning light comes on, add Genuine NISSAN Super Heavy Duty Brake Fluid or equivalent **DOT3** (except for NISMO models), or Genuine NISSAN Brake Fluid R35 Special II fluid (for NISMO models) up to the MAX line ②. If fluid must be added frequently, the system should be checked. It is recommended you visit a NISSAN dealer for this service.

## WARNING

**For NISMO models: Genuine NISSAN Brake Fluid R35 Special II is the factory fill brake fluid. The Vehicle Dynamic Control (VDC) unit and other related parts were specially designed for this brake fluid. Using any other non-equivalent brake fluid may result in improper operation of the brake system which result in serious injury or death.**

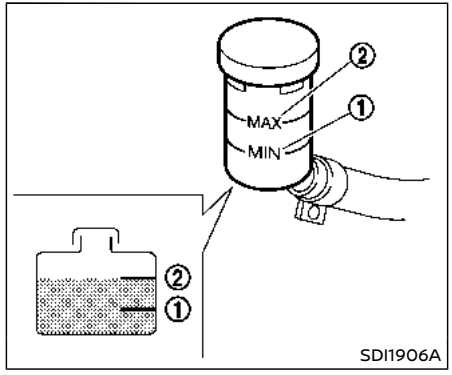


### CLUTCH FLUID (Manual transmission models)

Check the fluid level in the reservoir. If the fluid level is below the MIN line ①, add Genuine NISSAN Brake Fluid R35 Special II or equivalent **DOT 4** up to the MAX line ②. If fluid must be added frequently, the system should be checked. It is recommended you visit a NISSAN dealer for this service.

## WINDOW WASHER FLUID

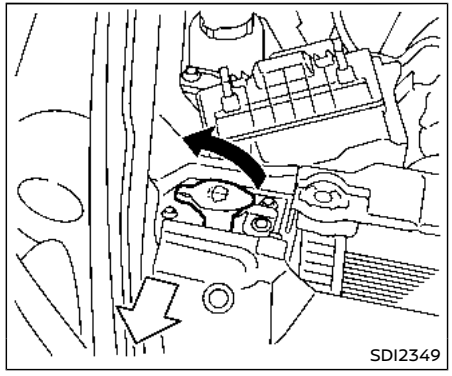


Fill the window washer fluid reservoir periodically. Add window washer fluid when the low window washer fluid warning appears.

To fill the window washer fluid reservoir, lift the cap off the reservoir tank and pour the window washer fluid into the tank opening.

Add a washer solvent to the water for better cleaning. In the winter season, add a windshield washer antifreeze. Follow the manufacturer's instructions for the mixture ratio.

Refill the reservoir more frequently when driving conditions require an increased amount of window washer fluid.

Recommended fluid is Genuine NISSAN Windshield Washer Concentrate Cleaner & Antifreeze or equivalent.

**CAUTION**

- **Do not substitute engine antifreeze coolant for window washer solution. This may result in damage to the paint.**
- **Do not fill the window washer reservoir tank with washer fluid concentrates at full strength. Some methyl alcohol based washer fluid concentrates may permanently stain the grille if spilled while filling the window washer reservoir tank.**
- **Pre-mix washer fluid concentrates with water to the manufacturer's recommended levels before pouring the fluid into the window washer reservoir tank. Do not use the window washer reservoir tank to mix the washer fluid concentrate and water.**

- Keep the battery surface clean and dry. Clean the battery with a solution of baking soda and water.
- Make certain the terminal connections are clean and securely tightened.
- If the vehicle is not to be used for 30 days or longer, disconnect the negative (–) battery terminal cable to prevent discharging it.

**NOTE:**

**Care should be taken to avoid situations that can lead to potential battery discharge and potential no-start conditions such as:**

1. **Installation or extended use of electronic accessories that consume battery power when the engine is not running (Phone chargers, GPS, DVD players, etc.)**
2. **Vehicle is not driven regularly and/or only driven short distances.**

**In these cases, the battery may need to be charged to maintain battery health.**

**CAUTION**

**When the battery cable is removed from the battery terminal, do not close either of front doors. The automatic window adjusting function will not work, and the side roof panel may be damaged.**

To disconnect the negative (–) battery terminal, perform the procedure in the following order. Otherwise, the window and the side roof panel may contact and be damaged.

1. Close the windows.
2. Open the hood.
3. Close and lock all the doors.
4. Disconnect the negative (–) battery terminal.
5. Securely close the hood.

To connect the negative (–) battery terminal, perform the procedure in the following order. Otherwise, the window and the side roof panel may contact and be damaged.

1. Unlock and open the driver side door. Do not close the door.
2. Open the hood.
3. Connect the negative (–) battery terminal. Then close the hood.
4. Fully open the driver side door window.
5. Close the driver side door and the window.

## ⚠ WARNING

- **Do not expose the battery to flames or electrical sparks. Hydrogen gas generated by the battery is explosive. Do not allow battery fluid to contact your skin, eyes, fabrics, or painted surfaces. After touching a battery or battery cap, do not touch or rub your eyes. Thoroughly wash your hands. If the acid contacts your eyes, skin or clothing, immediately flush with water for at least 15 minutes and seek medical attention.**
- **Do not operate the vehicle if the fluid in the battery is low. Low battery fluid can cause a higher load on the battery which can generate heat, reduce battery life, and in some cases lead to an explosion.**
- **When working on or near a battery, always wear suitable eye protection and remove all jewelry.**
- **Battery posts, terminals and related accessories contain lead and lead compounds. Wash hands after handling.**
- **Keep the battery out of the reach of children.**

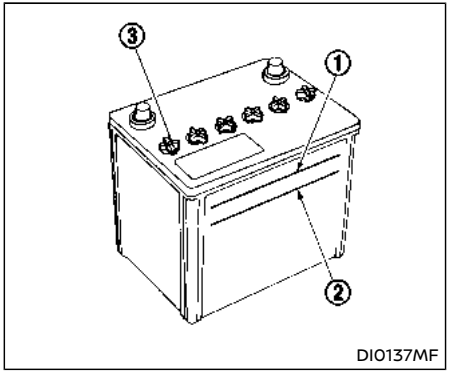


Check the fluid level in each cell (Remove the battery cover if it is necessary). It should be between the UPPER LEVEL ① and LOWER LEVEL ② lines.

If it is necessary to add fluid, add only distilled water to bring the level to the indicator in each filler opening. **Do not overfill.**

1. Remove the cell plugs ③.

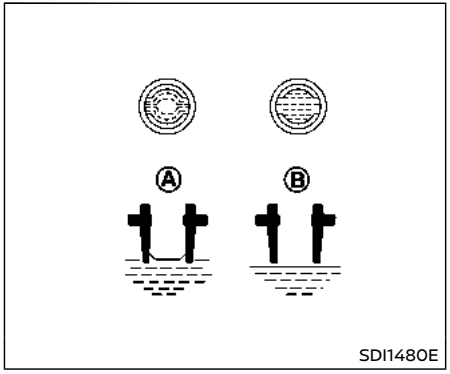


2. Add distilled water up to the UPPER LEVEL ① line.

   If the side of the battery is not clear, check the distilled water level by looking directly above the cell; the condition Ⓐ indicates OK and the conditions Ⓑ needs more to be added.

3. Tighten cell plugs ③.

Vehicles operated in high temperatures or under severe conditions require frequent checks of the battery fluid level.

## JUMP STARTING

If jump starting is necessary, see "Jump starting" (P.6-15). If the engine does not start by jump starting, the battery may have to be replaced. It is recommended you visit a NISSAN dealer for this service.

**CAUTION**

- **Do not ground accessories directly to the battery terminal. Doing so will bypass the variable voltage control system and the vehicle battery may not charge completely.**
- **Use electrical accessories with the engine running to avoid discharging the vehicle battery.**

The variable voltage control system measures the amount of electrical discharge from the battery and controls voltage generated by the generator.

## DRIVE BELTS

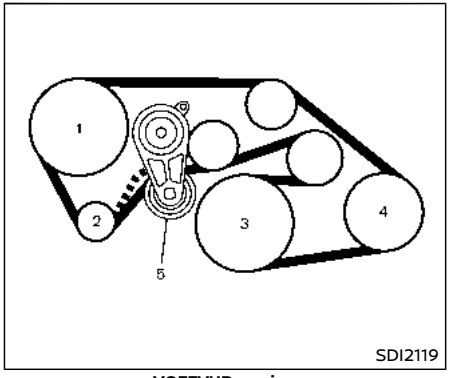


**VQ37VHR engine**

1. Power steering fluid pump
2. Alternator
3. Crankshaft pulley
4. Air conditioner compressor
5. Drive belt auto-tensioner

**WARNING**

**Be sure the ignition switch is in the OFF or LOCK position before servicing drive belts. The engine could rotate unexpectedly.**

1. Visually inspect the belt for signs of unusual wear, cuts, fraying or looseness. If the belt is in poor condition or loose, have it replaced or adjusted. It is recommended you visit a NISSAN dealer for this service.
2. Have the belt condition checked regularly for condition and tension in accordance with the maintenance schedule shown in the "9. Maintenance and schedules" section.

## SPARK PLUGS

**WARNING**

**Be sure the engine and the ignition switch are off and that the parking brake is engaged securely.**

**CAUTION**

**Be sure to use the correct socket to remove the spark plugs. An incorrect socket can damage the spark plugs.**

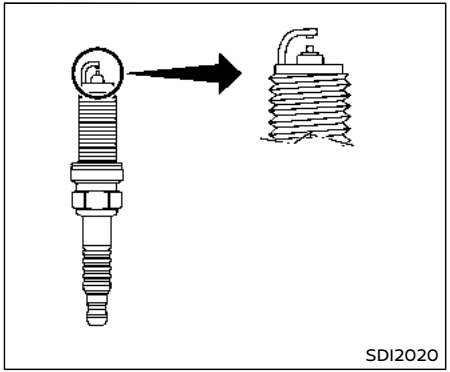


## REPLACING SPARK PLUGS

If replacement is required, it is recommended you visit a NISSAN dealer for this service.

### Iridium-tipped spark plugs

It is not necessary to replace the iridium-tipped spark plugs as frequently as the conventional type spark plugs since they will last much longer. Follow the maintenance schedule shown in the "9. Maintenance and schedules" section, but do not reuse them by cleaning or regapping.

**Always replace spark plugs with recommended or equivalent ones.**

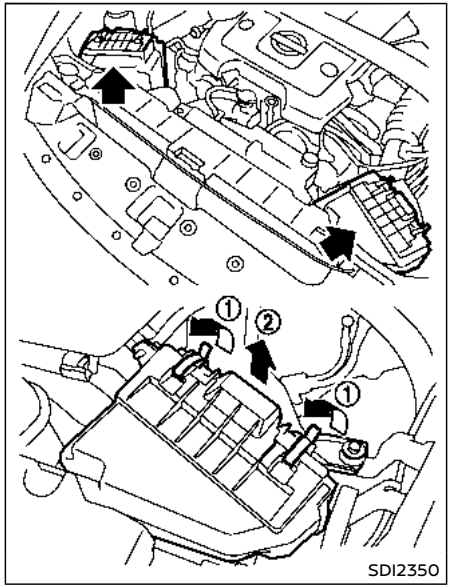


Remove the retainers ① as illustrated and pull out the filter element ②.

The filter element should not be cleaned and reused. Replace it according to the maintenance schedule shown in the "9. Maintenance and schedules" section. When replacing the filter, wipe the inside of the air cleaner housing and the cover with a damp cloth.

**WARNING**

- **Operating the engine with the air cleaner removed can cause you or others to be burned. The air cleaner not only cleans the air, it stops flame if the engine backfires. If it is not there, and the engine backfires, you could be burned. Do not drive with the air cleaner removed, and be careful when working on the engine with the air cleaner removed.**
- **Never pour fuel into the throttle body or attempt to start the engine with the air cleaner removed. Doing so could result in serious injury.**

## WINDSHIELD WIPER BLADES

### CLEANING

If your windshield is not clear after using the windshield washer or if a wiper blade chatters when running, wax or other material may be on the blade or windshield.

Clean the outside of the windshield with a washer solution or a mild detergent. Your windshield is clean if beads do not form when rinsing with clear water.

Clean each blade by wiping it with a cloth soaked in a washer solution or a mild detergent. Then rinse the blade with clear water. If your windshield is still not clear after cleaning the blades and using the wiper, replace the blades.

**CAUTION**

**Worn windshield wiper blades can damage the windshield and impair driver vision.**

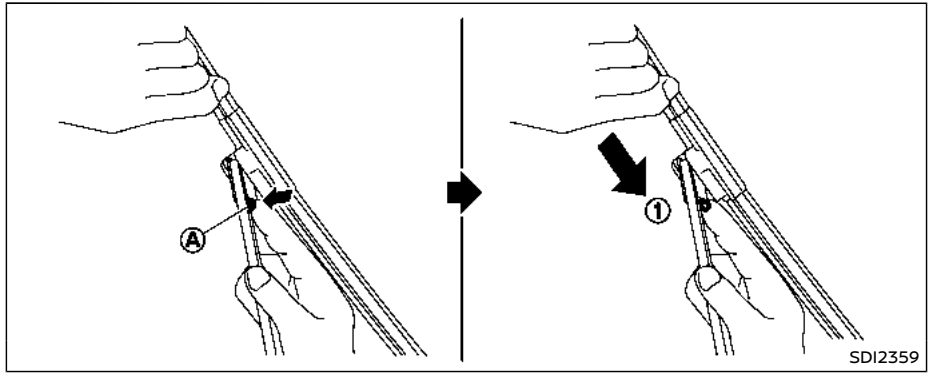


### REPLACING

Replace the wiper blades if they are worn.

1. Lift the wiper arm away from the windshield.
2. Push the release tab Ⓐ, and then move the wiper blade down the wiper arm ① while pushing the release tab to remove.
3. Insert the new wiper blade onto the wiper arm until a click sounds.
4. Rotate the wiper blade so the dimple is in the groove.

**CAUTION**

- **After wiper blade replacement, return the wiper arm to its original position;**

  **otherwise it may be damaged when the hood is opened.**
- **Make sure the wiper blades contact the glass; otherwise the arm may be damaged from wind pressure.**

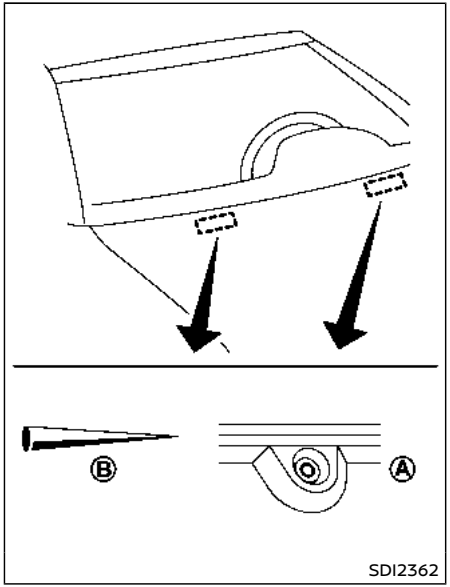


Be careful not to clog the washer nozzle Ⓐ. This may cause improper windshield washer operation. If the nozzle is clogged, remove any objects with a needle or small pin Ⓑ. Be careful not to damage the nozzle.

If the brakes do not operate properly, it is recommended you have the brakes checked by a NISSAN dealer.

## SELF-ADJUSTING BRAKES

Your vehicle is equipped with self-adjusting brakes.

The disc-type brakes self-adjust every time the brake pedal is applied.

**WARNING**

**Have your brake system checked if the brake pedal height does not return to normal. It is recommended you visit a NISSAN dealer for this service.**

## BRAKE PAD WEAR WARNING

The disc brake pads have audible wear warnings. When a brake pad requires replacement, it will make a high pitched scraping sound when the vehicle is in motion. This scraping sound will first occur only when the brake pedal is depressed. After more wear of the brake pad the sound will always be heard even if the brake pedal is not depressed. Have the brakes checked as soon as possible if the wear warning sound is heard.

Under some driving or climate conditions, occasional brake squeak, squeal or other noise may be heard. Occasional brake noise during light to moderate stops is normal and does not affect the function or performance of the brake system.

**Proper brake inspection intervals should be followed.** For additional information, see the maintenance schedule shown in the "9. Maintenance and schedules" section.

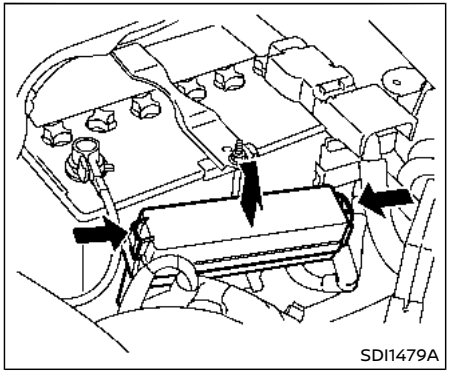
SDI1479A

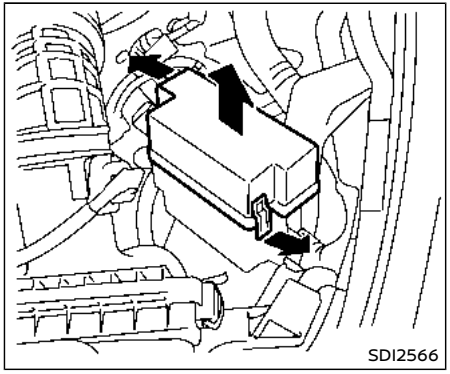
SDI2566

ENGINE COMPARTMENT

**WARNING**

**Never use a fuse of a higher or lower amperage rating than that specified on the fuse box cover. This could damage the electrical system or electronic control units or cause a fire.**

If any electrical equipment does not operate, check for an open fuse.

1. Be sure the ignition switch is pushed to the OFF or LOCK position and the headlight switch is turned to OFF.
2. Open the engine hood.
3. Remove the fuse/fusible link holder cover.
4. Remove the fuse with the fuse puller located in the passenger compartment fuse box.

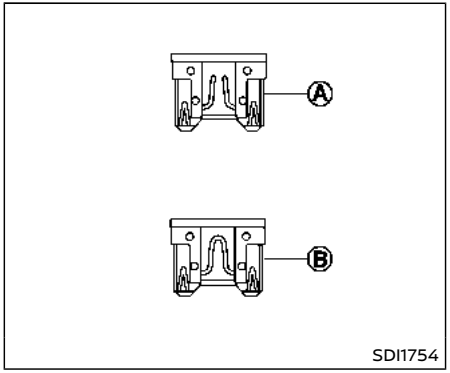

SDI1754

5. If the fuse is open Ⓐ, replace it with a new fuse Ⓑ. Spare fuses are stored in the passenger compartment fuse box.
6. If a new fuse also opens, have the electrical system checked and repaired. It is recommended you visit a NISSAN dealer for this service.

## Fusible links

If any electrical equipment does not operate and fuses are in good condition, check the fusible links. If any of these fusible links are melted, replace only with genuine NISSAN parts.

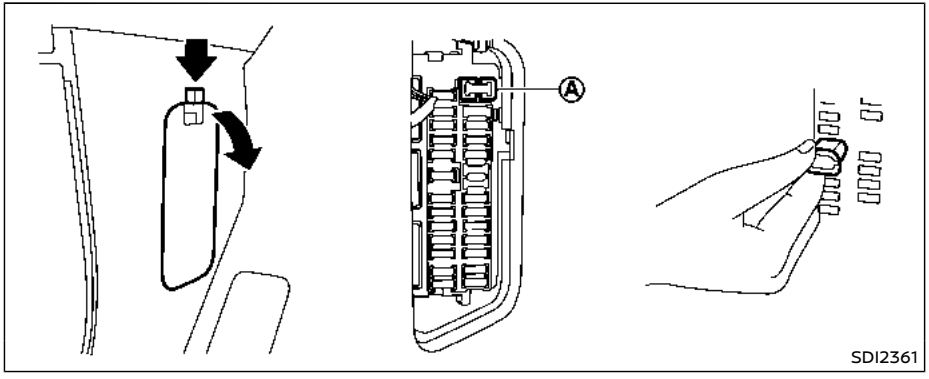


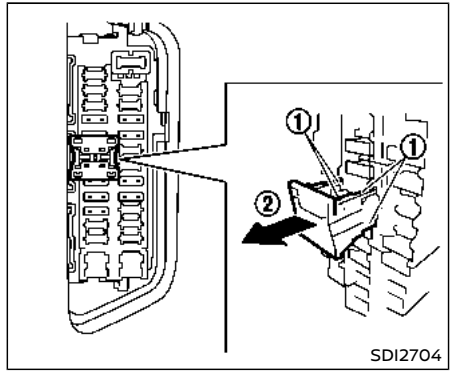


## PASSENGER COMPARTMENT

**WARNING**

**Never use a fuse of a higher or lower amperage rating than that specified on the fuse box cover. This could damage the electrical system or electronic control units or cause a fire.**

If any electrical equipment does not operate, check for an open fuse.

1. Be sure the ignition switch is pushed to the OFF or LOCK position and the headlight switch is turned to OFF.
2. Open the fuse box lid.
3. Remove the fuse with the fuse puller Ⓐ.
4. If the fuse is open, replace it with a new fuse. Spare fuses are stored in the fuse box.
5. If a new fuse also opens, have the electrical system checked and repaired. It is recommended you visit a NISSAN dealer for this service.

### Extended storage fuse switch

To reduce battery drain, the extended storage fuse switch comes from the factory switched off.

Prior to delivery of your vehicle, the switch is pushed in (switched on) and should always remain on.

If the extended storage fuse switch is not pushed in (switched on), the "SHIPPING MODE ON, PUSH STORAGE FUSE" warning may appear on the vehicle information display. See "Warnings and alerts" (P.2-21).

If any electrical equipment does not operate, remove the extended storage fuse switch and check for an open fuse.

**NOTE:**

**If the extended storage fuse switch malfunctions, or if the fuse is open, it is not necessary to replace the switch. In this case, remove the extended storage fuse switch and replace it with a new fuse of the same rating.**

**How to remove the extended storage fuse switch:**

1. To remove the extended storage fuse switch, be sure the ignition switch is in the OFF or LOCK position.
2. Be sure the headlight switch is in the OFF position.
3. Remove the fuse box cover.
4. Pinch the locking tabs ① found on each side of the storage fuse switch.
5. Pull the storage fuse switch straight out from the fuse box ②.

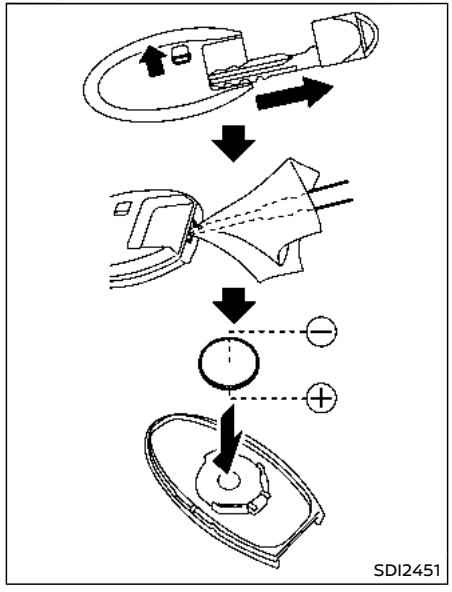


**CAUTION**

**Be careful not to allow children to swallow the battery and removed parts.**

Replace the battery as follows:

1. Remove the mechanical key from the key.
2. Insert a small screwdriver into the slit of the corner and twist it to separate the upper part from the lower part. Use a cloth to protect the casing.
3. Replace the battery with a new one.

   Recommended battery:

   CR2032 or equivalent

   - Do not touch the internal circuit and electric terminals as doing so could cause a malfunction.
   - Hold the battery by the edges. Holding the battery across the contact points will seriously deplete the storage capacity.
   - Make sure that the ⊕ side faces the bottom case.

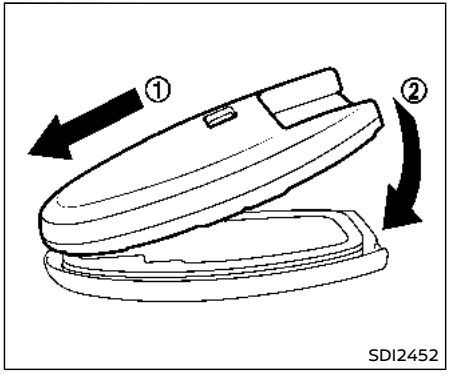


4. Align the tips of the upper and lower parts ①, and then push them together until it is securely closed ②.
5. Operate the buttons to check its operation.

If you need any assistance for replacement, it is recommended you visit a NISSAN dealer for this service.

**FCC Notice:**

**For USA:**

**This device complies with Part 15 of the FCC Rules. Operation is subject to the following two conditions: (1) This device may not cause harmful interference, and (2) this device must accept any interference received, including interference that may cause undesired operation.**

**NOTE:**

**Changes or modifications not expressly approved by the party responsible for compliance could void the user's authority to operate the equipment.**

**For Canada:**

**This device complies with Industry Canada licence-exempt RSS standard(s). Operation is subject to the following two conditions: (1) this device may not cause interference, and (2) this device must accept any interference, including interference that may cause undesired operation of the device.**

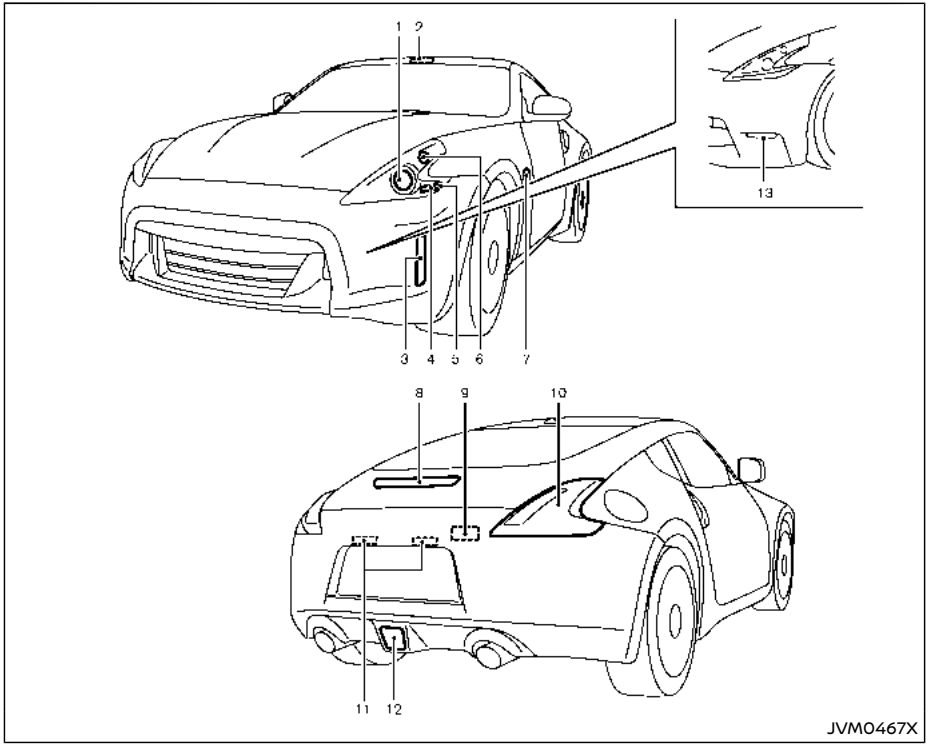


## COUPE

1. Headlight (high- and low-beam)
2. Map light
3. Daytime running light (except for NISMO models)
4. Front parking light
5. Front side marker light
6. Front turn signal light
7. Side turn signal light (if so equipped)
8. High-mounted stop light
9. Cargo light
10. Rear combination light (rear turn signal/ tail/stop/side marker/back-up light)
11. License plate light
12. Rear fog light (if so equipped)
13. Daytime running light (NISMO models)

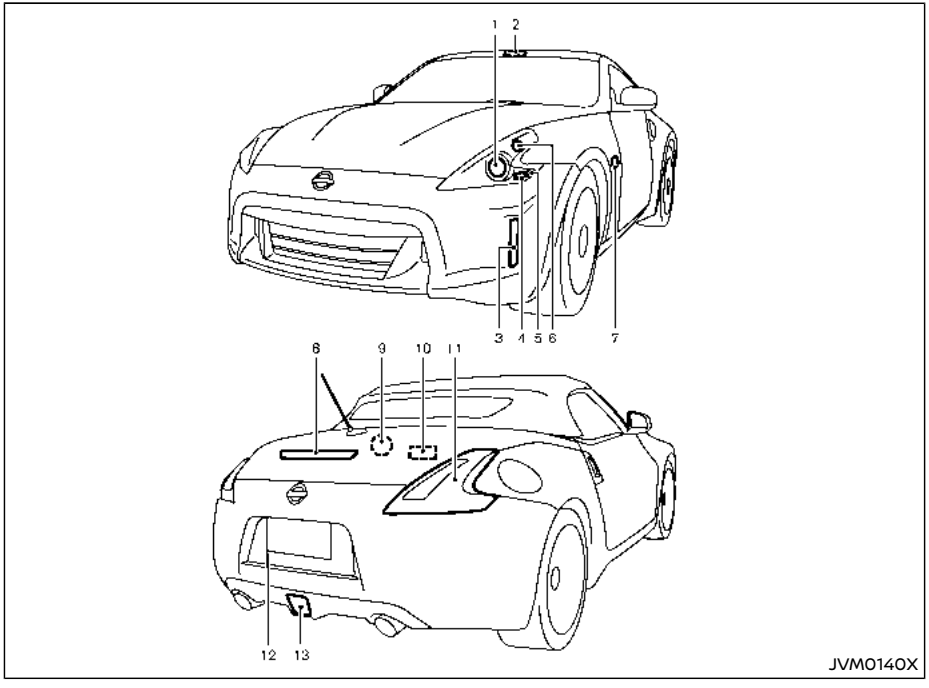


## ROADSTER

1. Headlight (high- and low-beam)
2. Map light
3. Daytime running light
4. Front parking light
5. Front side marker light
6. Front turn signal light
7. Side turn signal light
8. High-mounted stop light
9. Trunk light
10. Cargo area courtesy light
11. Rear combination light (rear turn signal/ tail/stop/side marker/back-up light)
12. License plate light
13. Rear fog light (if so equipped)

## HEADLIGHTS

Fog may temporarily form inside the lens of the exterior lights in the rain or in a car wash. A temperature difference between the inside and the outside of the lens causes the fog. This is not a malfunction. If large drops of water collect inside the lens, it is recommended you visit a NISSAN dealer for this service.

## Replacing

**WARNING**

**HIGH VOLTAGE**

**When xenon headlights are on, they produce a high voltage. To prevent an electric shock, never attempt to modify or disassemble. We recommend you have your xenon headlights replaced at a NISSAN dealer. For additional information, see "Headlight and turn signal switch" (P.2-34).**

Use the same number and wattage shown in the following chart as originally installed.

It is recommended you visit a NISSAN dealer if replacement is required.

## EXTERIOR AND INTERIOR LIGHTS

| Item | Wattage (W) | Bulb No. |
|---|---|---|
| Headlight* | | |
| High/Low beams (Xenon) | 35 | D2S |
| Front turn signal light* | 28/8 | 7444NA |
| Front parking light* | 5 | W5W |
| Front side marker light* | LED | — |
| Side turn signal light (if so equipped)* | LED | — |
| Daytime running light* | LED | — |
| Rear combination light* | | |
| back-up | 16 | W16W |
| turn signal | 21 | WY21W |
| stop/tail/side marker | LED | — |
| Rear fog light (if so equipped)* | 21 | W21W |
| License plate light* | 5 | W5W |
| Map light | 8 | — |
| Vanity mirror light* | 1.8 | — |
| Cargo area courtesy light (Roadster)* | 5 | — |
| Cargo light (Coupe)* | 5 | — |
| Trunk light (Roadster)* | 3.4 | — |
| High-mounted stop light* | LED | — |

*: It is recommended you visit a NISSAN dealer for replacement.

NOTE: Always check with the Parts Department at a NISSAN dealer for the latest information about parts.

## Replacement procedures

All other lights are either type A, B, C, D, E or F. When replacing a bulb, first remove the lens and/or cover.

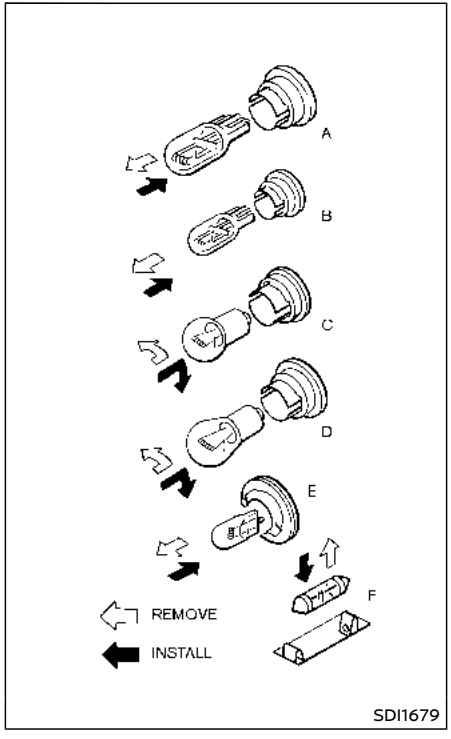


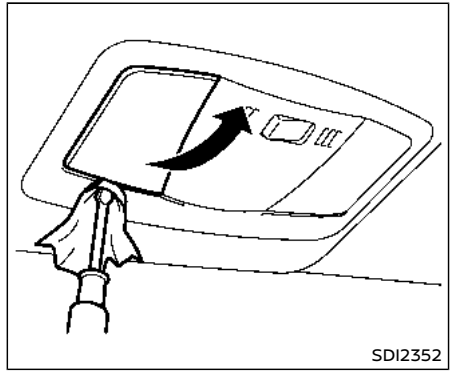


**Map light**

**If you have a flat tire, see "Flat tire" (P.6-3).**

## TIRE PRESSURE

### Tire Pressure Monitoring System (TPMS)

This vehicle is equipped with the Tire Pressure Monitoring System (TPMS). It monitors tire pressure of all tires except the spare. When the low tire pressure warning light is lit and the CHECK TIRE PRESSURE warning appears on the vehicle information display, one or more of your tires is significantly under-inflated.

The TPMS will activate only when the vehicle is driven at speeds above 16 MPH (25 km/h). Also, this system may not detect a sudden drop in tire pressure (for example a flat tire while driving).

For more details, see "Low tire pressure warning light" (P.2-13), "Tire Pressure Monitoring System (TPMS)" (P.5-3) and "Tire Pressure Monitoring System (TPMS)" (P.6-3).

### Tire inflation pressure

Check the pressure of the tires (including the spare) often and always prior to long distance trips. The recommended tire pressure specifications are shown on the Tire and Loading Information label under the "Cold Tire Pressure" heading. The Tire and Loading Information label is affixed to the driver side center pillar. Tire pressures should be checked regularly because:

- Most tires naturally lose air over time.
- Tires can lose air suddenly when driven over potholes or other objects or if the vehicle strikes a curb while parking.

The tire pressures should be checked when the tires are cold. The tires are considered COLD after the vehicle has been parked for 3 or more hours, or driven less than 1 mile (1.6 km) at moderate speeds.

**Incorrect tire pressure, including under inflation, may adversely affect tire life and vehicle handling.**

**WARNING**

- **Improperly inflated tires can fail suddenly and cause an accident.**
- **The Gross Vehicle Weight rating (GVWR) is located on the F.M.V.S.S./C.M.V.S.S. label. The vehicle weight capacity is indicated on the Tire and Loading Information label. Do not load your vehicle beyond this capacity. Overloading your vehicle may result in reduced tire life, unsafe operating conditions due to premature tire failure, or unfavorable handling characteristics and could also lead to a serious accident. Loading beyond the specified capacity may also result in failure of other vehicle components.**

- **Before taking a long trip, or whenever you heavily load your vehicle, use a tire pressure gauge to ensure that the tire pressures are at the specified level.**
- **For additional information regarding tires, refer to "Important Tire Safety Information" (US) or "Tire Safety Information" (Canada) in the Warranty Information Booklet.**

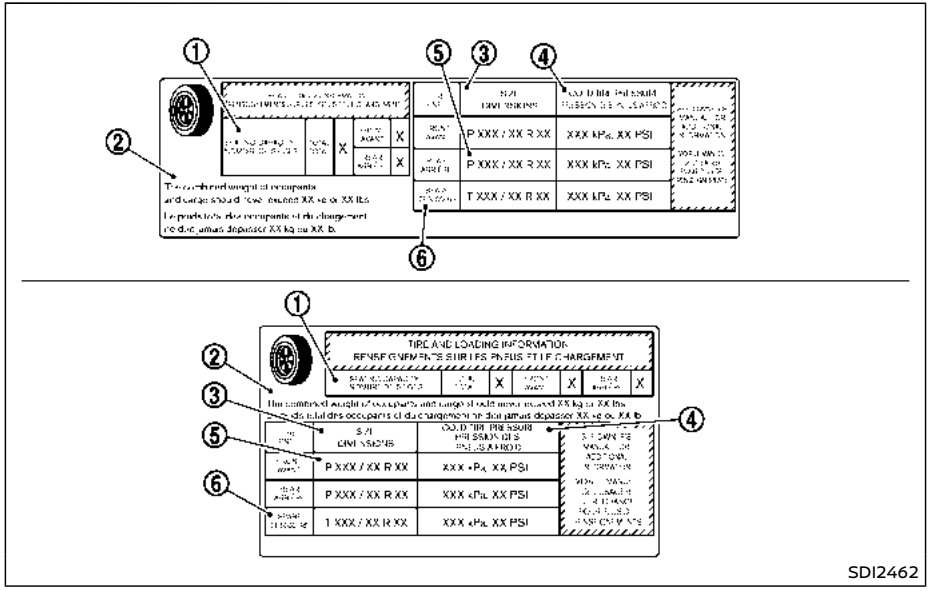


Tire and Loading Information label

① Seating capacity: The maximum number of occupants that can be seated in the vehicle.

② Vehicle load limit: See "Vehicle loading information" (P.10-19).

③ Original size: The size of the tires originally installed on the vehicle at the factory.

④ Cold tire pressure: Inflate the tires to this pressure when the tires are cold. Tires are considered COLD after the vehicle has been parked for 3 or more hours, or driven less than 1 mile (1.6 km) at moderate speeds. The recommended cold tire inflation is set by the manufacturer to provide the best balance of tire wear, vehicle handling, driveability, tire noise, etc., up to the vehicle's GVWR.

⑤ Tire size — see "Tire labeling" (P.8-30).

⑥ Spare tire size or compact spare tire size (if so equipped)

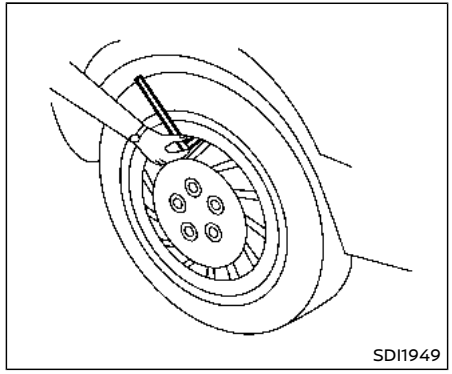


Checking the tire pressure

1. Remove the valve stem cap from the tire.
2. Press the pressure gauge squarely onto the valve stem. Do not press too hard or force the valve stem sideways, or air will escape. If the hissing sound of air escaping from the tire is heard while checking the pressure, reposition the gauge to eliminate this leakage.
3. Remove the gauge.
4. Read the tire pressure on the gauge stem and compare it to the specification shown on the Tire and Loading Information label.
5. Add air to the tire as needed. If too much air is added, press the core of the valve stem briefly with the tip of the gauge stem to release pressure. Recheck the pressure and add or release air as needed.
6. Install the valve stem cap.
7. Check the pressure of all other tires, including the spare.

**Coupe models (except for NISMO models):**

| | SIZE | COLD TIRE INFLATION PRESSURE |
|---|---|---|
| FRONT ORIGINAL TIRE | 225/50R-18 95W | 240 kPa, 35 PSI |
| | 245/40R-19 94W | 220 kPa, 32 PSI |
| REAR ORIGINAL TIRE | 245/45R-18 96W | 240 kPa, 35 PSI |
| | 275/35R-19 96W | 220 kPa, 32 PSI |
| SPARE TIRE | T145/80-D17 107M | 420 kPa, 60 PSI |
| | T145/70-R18 107M | 420 kPa, 60 PSI |

**Roadster models:**

| | SIZE | COLD TIRE INFLATION PRESSURE |
|---|---|---|
| FRONT ORIGINAL TIRE | 225/50R-18 95W | 260 kPa, 38 PSI |
| | 245/40R-19 94W | 220 kPa, 32 PSI |
| REAR ORIGINAL TIRE | 245/45R-18 96W | 260 kPa, 38 PSI |
| | 275/35R-19 96W | 220 kPa, 32 PSI |
| SPARE TIRE | T145/80-D17 107M | 420 kPa, 60 PSI |
| | T145/70-R18 107M | 420 kPa, 60 PSI |

**Coupe models (NISMO models):**

| | SIZE | COLD TIRE INFLATION PRESSURE |
|---|---|---|
| FRONT ORIGINAL TIRE | 245/40R-19 98Y | 240 kPa, 35 PSI |
| REAR ORIGINAL TIRE | 285/35R-19 99Y | 240 kPa, 35 PSI |
| SPARE TIRE | T145/70-R18 107M | 420 kPa, 60 PSI |

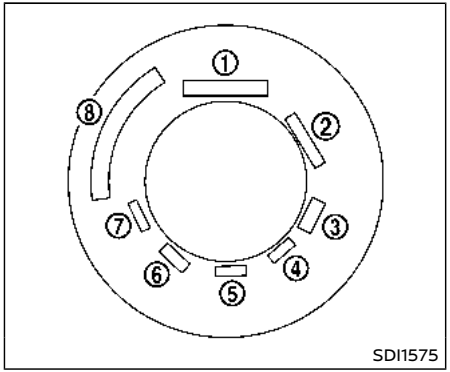


Example

TIRE LABELING

Federal law requires tire manufacturers to place standardized information on the sidewall of all tires. This information identifies and describes the fundamental characteristics of the tire and also provides the tire identification number (TIN) for safety standard certification. The TIN can be used to identify the tire in case of a recall.

Example

① Tire size (example: P215/60R16 94H)

1. P: The "P" indicates the tire is designed for passenger vehicles. (Not all tires have this information.)
2. Three-digit number (215): This number gives the width in millimeters of the tire from sidewall edge to sidewall edge.
3. Two-digit number (60): This number, known as the aspect ratio, gives the tire's ratio of height to width.
4. R: The "R" stands for radial.
5. Two-digit number (16): This number is the wheel or rim diameter in inches.
6. Two- or three-digit number (94): This number is the tire's load index. It is a measurement of how much weight each tire can support. You may not find this information on all tires because it is not required by law.
7. H: Tire speed rating. You should not drive the vehicle faster than the tire speed rating.

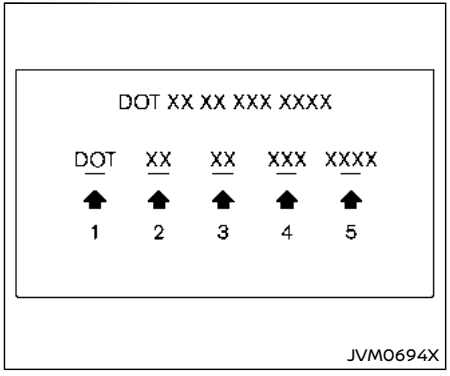


**Example**

② TIN (Tire Identification Number) for a new tire (example: DOT XX XX XXX XXXX)

1. DOT: Abbreviation for the "Department of Transportation". The symbol can be placed above, below or to the left or right of the Tire Identification Number.
2. Two-digit code: Manufacturer's identification mark
3. Two-digit code: Tire size
4. Three-digit code: Tire type code (Optional)
5. Four numbers represent the week and year the tire was built. For example, the numbers 3103 means the 31st week of 2003. If these numbers are missing, then look on the other sidewall of the tire.

③ Tire ply composition and material

The number of layers or plies of rubber-coated fabric in the tire.

Tire manufacturers also must indicate the materials in the tire, which include steel, nylon, polyester, and others.

④ Maximum permissible inflation pressure

This number is the greatest amount of air pressure that should be put in the tire. Do not exceed the maximum permissible inflation pressure.

⑤ Maximum load rating

This number indicates the maximum load in kilograms and pounds that can be carried by the tire. When replacing the tires on the vehicle, always use a tire that has the same load rating as the factory installed tire.

⑥ Term of "tubeless" or "tube type"

Indicates whether the tire requires an inner tube ("tube type") or not ("tubeless").

⑦ The word "radial"

The word "radial" is shown, if the tire has radial structure.

⑧ Manufacturer or brand name

Manufacturer or brand name is shown.

**Other tire-related terminology:**

In addition to the many terms that are defined throughout this section, Intended Outboard Sidewall is (1) the sidewall that contains a whitewall, bears white lettering or bears manufacturer, brand and/or model name molding that is higher or deeper than the same molding on the other sidewall of the tire, or (2) the outward facing sidewall of an asymmetrical tire that has a particular side that must always face outward when mounted on a vehicle.

TYPES OF TIRES

**WARNING**

- **When changing or replacing tires, be sure all four tires are of the same type (Example: Summer, All Season or Snow) and construction. A NISSAN dealer may be able to help you with information about tire type, size, speed rating and availability.**
- **Replacement tires may have a lower speed rating than the factory equipped tires, and may not match the potential maximum vehicle speed. Never exceed the maximum speed rating of the tire.**
- **Replacing tires with those not originally specified by NISSAN could affect the proper operation of the TPMS.**
- **For additional information regarding tires, refer to "Important Tire Safety Information" (US) or "Tire Safety Information" (Canada) in the Warranty Information Booklet.**

## All season tires

NISSAN specifies all season tires on some models to provide good performance all year, including snowy and icy road conditions. All Season tires are identified by ALL SEASON and/or M&S (Mud and Snow) on the tire sidewall. Snow tires have better snow traction than All Season tires and may be more appropriate in some areas.

## Summer tires

NISSAN specifies summer tires on some models to provide superior performance on dry roads. Summer tire performance is substantially reduced in snow and ice. Summer tires do not have the tire traction rating M&S on the tire sidewall.

If you plan to operate your vehicle in snowy or icy conditions, NISSAN recommends the use of SNOW tires or ALL SEASON tires on all four wheels.

## Snow tires

If snow tires are needed, it is necessary to select tires equivalent in size and load rating to the original equipment tires. If you do not, it can adversely affect the safety and handling of your vehicle.

Generally, snow tires will have lower speed ratings than factory equipped tires and may not match the potential maximum vehicle speed. Never exceed the maximum speed rating of the tire.

If you install snow tires, they must be the same brand, construction and tread pattern on all four wheels, and the same sizes as the original tires.

For additional traction on icy roads, studded tires may be used. However, some U.S. states and Canadian provinces prohibit their use. Check local, state and

provincial laws before installing studded tires. Skid and traction capabilities of studded snow tires, on wet or dry surfaces, may be poorer than that of non-studded snow tires.

## TIRE CHAINS

**CAUTION**

**Tire chains/cables should not be installed on 19-inch size tires. Doing so will cause damage to the vehicle. If you plan to use tire chains/cables, you should install 18-inch size tires on your vehicle.**

Use of tire chains may be prohibited according to location. Check the local laws before installing tire chains. When installing tire chains, make sure they are the proper size for the tires on your vehicle and are installed according to the chain manufacturer's suggestions. **Use only SAE Class S chains.** Class "S" chains are used on vehicles with restricted tire to vehicle clearance. Vehicles that can use Class "S" chains are designed to meet the SAE standard minimum clearances between the tire and the closest vehicle suspension or body component required to accommodate the use of a winter traction device (tire chains or cables). The minimum clearances are determined using the factory equipped tire size. Other types may damage your vehicle. Use chain tensioners when recommended by the tire chain manufacturer to ensure a tight fit. Loose end links of the tire chain must be secured or removed to prevent the possibility of whipping action damage to the fenders or underbody. If possible, avoid fully loading your vehicle when using tire chains. In addition, drive at a reduced speed. Otherwise, your vehicle may be damaged and/or vehicle handling and performance may be adversely affected.

**Tire chains must be installed only on the rear wheels and not on the front wheels.**

Never install tire chains on a TEMPORARY USE ONLY spare tire.

Do not use tire chains on dry roads. Driving with tire chains in such conditions can cause damage to the various mechanisms of the vehicle due to some overstress.

## CHANGING WHEELS AND TIRES

### Tire rotation

Tires cannot be rotated on this vehicle because the front tires are a different size than the rear tires.

A pin is on the front brake rotor to prevent the rear wheels from being installed in place of the front wheels. The spare tire can be installed in place of the front and rear wheels. When installing the spare tire in the front wheel, the hole in the spare tire wheel must be aligned with the pin on the brake rotor.

**WARNING**

- **Retighten the wheel nuts when the vehicle has been driven for 600 miles (1,000 km) (also in cases of a flat tire, etc.).**
- **For additional information regarding tires, refer to "Important Tire Safety Informa-**

**tion" (US) or "Tire Safety Information" (Canada) in the Warranty Information Booklet.**

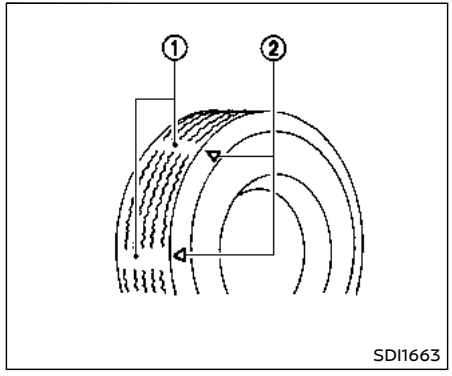


Tire wear and damage

① Wear indicator

② Wear indicator location marks. The locations are shown by "△", "TWI", etc. depending on tire types.

**WARNING**

- **Tires should be periodically inspected for wear, cracking, bulging or objects caught in the tread. If excessive wear, cracks, bulging or deep cuts are found, the tire(s) should be replaced.**
- **The original tires have built-in tread wear indicators. When wear indicators are visible, the tire(s) should be replaced.**
- **Tires degrade with age and use. Have tires, including the spare, over 6 years old checked by a qualified technician, because some tire damage may not be obvious. Replace the tires as necessary to prevent tire failure and possible personal injury.**
- **Improper service of the spare tire may result in serious personal injury. If it is necessary to repair the spare tire, it is recommended you visit a NISSAN dealer for this service.**
- **For additional information regarding tires, refer to "Im-**

**portant Tire Safety Information" (US) or "Tire Safety Information" (Canada) in the Warranty Information Booklet.**

## Replacing wheels and tires

When replacing a tire, use the same size, tread design, speed rating and load carrying capacity as originally equipped. (See "Specifications" (P.10-9) for recommended types and sizes of tires and wheels.)

**WARNING**

- **The use of tires other than those recommended or the mixed use of tires of different brands, construction (bias, bias-belted or radial), or tread patterns can adversely affect the ride, braking, handling, ground clearance, body-to-tire clearance, tire chain clearance, speedometer calibration, headlight aim and bumper height. Some of these effects may lead to accidents and could result in serious personal injury.**
- **If your vehicle was originally equipped with 4 tires that were the same size and you are only replacing 2 of the 4 tires, install the new tires on the rear axle. Placing new tires on the front axle may cause loss of vehicle control in some driving conditions and cause an accident and personal injury.**
- **If the wheels are changed for any reason, always replace with wheels which have the same off-set dimension. Wheels of a different off-set could cause premature tire wear, degrade vehicle handling characteristics and/or interference with the brake discs/drums. Such interference can lead to decreased braking efficiency and/or early brake pad/shoe wear. See "Wheels and tires" (P.10-10) of this manual for wheel off-set dimensions.**
- **Since the spare tire is not equipped with the TPMS, when a spare tire is mounted or a wheel is replaced, the TPMS will not function and the low tire pressure warning light will flash for approximately 1 minute. The light will remain on after 1 minute. Have your tires replaced and/or TPMS system reset as soon as possible. It is recommended you visit a NISSAN dealer for these services.**
- **Replacing tires with those not originally specified by NISSAN could affect the proper operation of the TPMS.**
- **The TPMS sensor may be damaged if it is not handled correctly. Be careful when handling the TPMS sensor.**
- **When replacing the TPMS sensor, the ID registration may be required. It is recommended you visit a NISSAN dealer for ID registration.**
- **Do not use a valve stem cap that is not specified by NISSAN. The valve stem cap may become stuck.**
- **Be sure that the valve stem caps are correctly fitted. Otherwise the valve may be clogged up with dirt and cause a malfunction or loss of pressure.**
- **Do not install a deformed wheel or tire even if it has been repaired. Such wheels or tires could have structural damage and could fail**

**without warning.**

- **The use of retread tire is not recommended.**
- **For additional information regarding tires, refer to "Important Tire Safety Information" (US) or "Tire Safety Information" (Canada) in the Warranty Information Booklet.**

## Wheel balance

Unbalanced wheels may affect vehicle handling and tire life. Even with regular use, wheels can get out of balance. Therefore, they should be balanced as required.

**Wheel balance service should be performed with the wheels off the vehicle. Spin balancing the wheels on the vehicle could lead to mechanical damage.**

For additional information regarding tires, refer to "Important Tire Safety Information" (US) or "Tire Safety Information" (Canada) in the NISSAN Warranty Information Booklet.

## Care of wheels

See "Cleaning exterior" (P.7-2) for details about care of the wheels.

## Spare tire (TEMPORARY USE ONLY (T-type) spare tire) (if so equipped)

Observe the following precautions if the T-type spare tire must be used, otherwise your vehicle could be damaged or involved in an accident.

**WARNING**

- **The T-type spare tire should be used for emergency use. It should be replaced with the standard tire at the first opportunity to avoid possible tire or differential damage.**
- **Drive carefully while the TEMPORARY USE ONLY spare tire is installed. Avoid sharp turns and abrupt braking while driving.**
- **Periodically check spare tire inflation pressure. Always keep the pressure of the TEMPORARY USE ONLY spare tire at 60 psi (420 kPa, 4.2 bar). Always keep the pressure of the full size spare tire (if so equipped) at the recommended pressure for standard tires, as indicated on the Tire and Loading Information label. For Tire and Loading Information label location, see "Tire and Loading Information label" in the index of this manual.**
- **With the TEMPORARY USE ONLY spare tire installed do not drive your vehicle at speeds faster than 50 MPH (80 km/h).**
- **When driving on roads covered with snow or ice, the TEMPORARY USE ONLY spare tire should be used on the front wheels and original tire used on the rear wheels (drive wheels). Use tire chains only on the two rear original tires.**
- **Tire tread of the TEMPORARY USE ONLY spare tire will wear at a faster rate than the standard tire. Replace the spare tire as soon as the tread wear indicators appear.**
- **Do not use the spare tire on other vehicles.**
- **Do not use more than one spare tire at the same time.**

**CAUTION**

- **Do not use tire chains on a TEMPORARY USE ONLY spare tire. Tire chains will not fit properly and may cause damage to the vehicle.**
- **Because the TEMPORARY USE ONLY spare tire is smaller than the original tire, ground clearance is reduced. To avoid damage to the vehicle, do not drive over obstacles. Also do not drive the vehicle through an automatic car wash since it may get caught.**

## EMERGENCY TIRE PUNCTURE REPAIR KIT (if so equipped)

The emergency tire puncture repair kit (Emergency Tire Sealant) is supplied with the vehicle instead of a spare tire. It can be used to temporarily repair minor tire punctures.

If possible, have the vehicle towed to a facility that can repair or replace the flat tire. Using the emergency tire puncture repair kit may cause a malfunction of the tire pressure sensor and cause the low tire pressure warning light to illuminate.

See “Flat tire” (P.6-3) for more details.

**MEMO**

# 9 Maintenance and schedules


Maintenance requirement ..... 9-2
General maintenance ..... 9-2
Scheduled maintenance ..... 9-2
Where to go for service ..... 9-2
General maintenance ..... 9-2
Explanation of general maintenance items ..... 9-2
Explanation of scheduled maintenance items ..... 9-5
Emission control system maintenance ..... 9-5
Chassis and body maintenance ..... 9-6
Maintenance schedules ..... 9-6
Additional maintenance items for severe operating conditions ..... 9-6
Standard maintenance ..... 9-7
Emission control system maintenance ..... 9-8
Chassis and body maintenance ..... 9-11
Maintenance under severe driving conditions ..... 9-13
Maintenance log ..... 9-14

## MAINTENANCE REQUIREMENT

Some day-to-day and regular maintenance is essential to maintain your vehicle in good mechanical condition, as well as its emission and engine performance.

It is the owner's responsibility to make sure that the scheduled maintenance, as well as general maintenance, is performed.

As the vehicle owner, you are the only one who can ensure that your vehicle receives the proper maintenance. You are a vital link in the maintenance chain.

### GENERAL MAINTENANCE

General maintenance includes those items which should be checked during normal day-to-day operation. They are essential for proper vehicle operation. It is your responsibility to perform these procedures regularly as prescribed.

Performing general maintenance checks requires minimal mechanical skill and only a few general automotive tools.

These checks or inspections can be done by yourself, a qualified technician or, if you prefer, a NISSAN dealer.

### SCHEDULED MAINTENANCE

The maintenance items listed in this section are required to be serviced at regular intervals. However, under severe driving conditions, additional or more frequent maintenance will be required.

### WHERE TO GO FOR SERVICE

If maintenance service is required or your vehicle appears to malfunction, have the systems checked and serviced. It is recommended you visit a NISSAN dealer for this service.

NISSAN technicians are well-trained specialists and are kept up to date with the latest service information through technical bulletins, service tips and training programs. They are completely qualified to work on NISSAN vehicles **before** work begins.

You can be confident that a NISSAN dealer's service department can perform the service needed to meet the maintenance requirements on your vehicle.

## GENERAL MAINTENANCE

During the normal day-to-day operation of the vehicle, general maintenance should be performed regularly as prescribed in this section. If you detect any unusual sounds, vibrations or smells, be sure to check for the cause, or it is recommended to have a NISSAN dealer do it promptly. In addition, it is recommended you visit a NISSAN dealer if you think that repairs are required.

When performing any checks or maintenance work, closely observe "Maintenance precautions" (P.8-2) of this manual.

### EXPLANATION OF GENERAL MAINTENANCE ITEMS

**Additional information on the following items with "*" is found in the "8. Do-it-yourself" section of this manual.**

#### Outside the vehicle

The maintenance items listed here should be performed from time to time, unless otherwise specified.

**Doors and engine hood:** Check that all doors and the engine hood, operate properly. Also ensure that all latches lock securely. Lubricate hinges, latches, latch pins, rollers and links if necessary. Make sure that the secondary latch keeps the hood from opening when the primary latch is released.

When driving in areas using road salt or other corrosive materials, check lubrication frequently.

**Lights*:** Clean the headlights on a regular basis. Make sure that the headlights, stop lights, tail lights, turn signal lights, and other lights are all operating properly and installed securely. Also check headlight aim.

**Road wheel nuts (lug nuts)*:** When checking the tires, make sure no wheel nuts are missing, and check for any loose wheel nuts. Tighten if necessary.

**Tire rotation*:** Tires cannot be rotated, as the front tires are a different size from the rear tires and the direction of wheel rotation is fixed in each tire.

**Tires*:** Check the pressure with a gauge often and always prior to long distance trips. If necessary, adjust the pressure in all tires, including the spare, to the pressure specified. Check carefully for damage, cuts or excessive wear.

**Tire Pressure Monitoring System (TPMS) transmitter components:** Replace the TPMS transmitter grommet seal, valve core and cap when the tires are replaced due to wear or age.

**Wheel alignment and balance:** If the vehicle should pull to either side while driving on a straight and level road, or if you detect uneven or abnormal tire wear, there may be a need for wheel alignment.

If the steering wheel or seat vibrates at normal highway speeds, wheel balancing may be needed.

For additional information regarding tires, refer to "Important Tire Safety Information" (US) or "Tire Safety Information" (Canada) in the NISSAN Warranty Information Booklet.

**Windshield:** Clean the windshield on a regular basis. Check the windshield at least every six months for cracks or other damage. Have a damaged windshield repaired by a qualified repair facility.

**Windshield wiper blades*:** Check for cracks or wear if they do not wipe properly.

## Inside the vehicle

The maintenance items listed here should be checked on a regular basis, such as when performing scheduled maintenance, cleaning the vehicle, etc.

**Accelerator pedal:** Check the pedal for smooth operation and make sure the pedal does not catch or require uneven effort. Keep the floor mat away from the pedal.

**Automatic transmission P (Park) mechanism:** On a fairly steep hill, check that your vehicle is held securely with the shift lever in the P (Park) position without applying any brakes.

**Brake pedal:** Check the pedal for smooth operation. If the brake pedal suddenly goes down further than normal, the pedal feels spongy or the vehicle seems to take longer to stop, have your vehicle checked immediately. It is recommended you visit a NISSAN dealer for this service. Keep the floor mat away from the pedal.

**Brakes:** Check that the brakes do not pull the vehicle to one side when applied.

**Parking brake:** Check the parking brake operation regularly. The vehicle should be securely held on a fairly steep hill with only the parking brake applied. If the parking brake needs adjusted, it is recommended you visit a NISSAN dealer for this service.

**Seats:** Check seat position controls such as seat adjusters, seatback recliner, etc. to ensure they operate smoothly and that all latches lock securely in every position. Check that the head restraints move up and down smoothly and that the locks (if so equipped) hold securely in all latched positions.

**Seat belts:** Check that all parts of the seat belt system (for example, buckles, anchors, adjuster and retractors) operate

properly and smoothly, and are installed securely. Check the belt webbing for cuts, fraying, wear or damage.

**Steering wheel:** Check for changes in the steering conditions, such as excessive free play, hard steering or strange noises.

**Warning lights and chimes:** Make sure that all warning lights and chimes are operating properly.

**Windshield defroster:** Check that the air comes out of the defroster outlets properly and in sufficient quantity when operating the heater or air conditioner.

**Windshield wiper and washer*:** Check that the wipers and washer operate properly and that the wipers do not streak.

## Under the hood and vehicle

The maintenance items listed here should be checked periodically (for example, each time you check the engine oil or refuel).

**Battery*:** Check the fluid level in each cell. It should be between the MAX and MIN lines. Vehicles operated in high temperatures or under severe condition require frequent checks of the battery fluid level.

**NOTE:**

**Care should be taken to avoid situations that can lead to potential battery discharge and potential no-start conditions such as:**

1. **Installation or extended use of electronic accessories that consume battery power when the engine is not running (Phone chargers, GPS, DVD players, etc.)**
2. **Vehicle is not driven regularly and/or only driven short distances.**

**In these cases, the battery may need to be charged to maintain battery health.**

**Brake and clutch fluid levels*:** Make sure that the brake and clutch fluid levels are between the MAX and MIN lines on the reservoir.

**Engine coolant level*:** Check the coolant level when the engine is cold.

**Engine drive belts*:** Make sure that no belt is frayed, worn, cracked or oily.

**Engine oil level*:** Check the level after parking the vehicle on a level spot and turning off the engine. Wait more than 15 minutes for the oil to drain back into the oil pan.

**Exhaust system:** Make sure there are no loose supports, cracks or holes. If the sound of the exhaust seems unusual or there is a smell of exhaust fumes, immediately have the exhaust system inspected. It is recommended you visit a NISSAN dealer for this service. (See "Precautions when starting and driving" (P.5-2) for exhaust gas (carbon monoxide).)

**Fluid leaks:** Check under the vehicle for fuel, oil, water or other fluid leaks after the vehicle has been parked for a while. Water dripping from the air conditioner after use is normal. If you should notice any leaks or if gasoline fumes are evident, check for the cause and have it corrected immediately.

**Power steering fluid level* and lines:** Check the level when the fluid is cold, with the engine off. Check the lines for proper attachment, leaks, cracks, etc.

**Radiator and hoses:** Check the front of the radiator and clean off any dirt, insects, leaves, etc., that may have accumulated. Make sure the hoses have no cracks, deformation, rot or loose connections.

**Underbody:** The underbody is frequently exposed to corrosive substances such as those used on icy roads or to control dust. It is very important to remove these substances, otherwise rust will form on the floor pan, frame, fuel lines and around the exhaust system. At the end of winter, the underbody should be thoroughly flushed with plain water, being careful to clean those areas where mud and dirt

may accumulate. For additional information, see "Cleaning exterior" (P.7-2).

**Windshield washer fluid*:** Check that there is adequate fluid in the reservoir.

## EXPLANATION OF SCHEDULED MAINTENANCE ITEMS

The following descriptions are provided to give you a better understanding of the scheduled maintenance items that should be regularly checked or replaced. The maintenance schedule indicates at which mileage/time intervals each item requires service.

In addition to scheduled maintenance, your vehicle requires that some items be checked during normal day-to-day operation. Refer to "General maintenance" (P.9-2).

Items marked with "*" are recommended by NISSAN for reliable vehicle operation. You are not required to perform maintenance on these items in order to maintain the warranties which come with your vehicle. Other maintenance items and intervals are required.

When applicable, additional information can be found in the "8. Do-it yourself" section of this manual.

**NOTE:**

**NISSAN does not advocate the use of non-OEM approved aftermarket flushing systems and strongly advises against performing these services on a NISSAN product. Many of the aftermarket flushing systems use non-OEM approved chemicals or solvents, the use of which has not been validated by NISSAN.**

**For recommended fuel, lubricants, fluids, grease, and refrigerant, refer to "Capacities and recommended fluids/lubricants" (P.10-2) of this manual.**

### EMISSION CONTROL SYSTEM MAINTENANCE

**Drive belts*:**

Check engine drive belts for wear, fraying or cracking and for proper tension. Replace any damaged drive belts.

**Engine air filter:**

Replace at specified intervals. When driving for prolonged periods in dusty conditions, check/replace the filter more frequently.

**Engine coolant*:**

Replace coolant at the specified interval. When adding or replacing coolant, be sure to use only Genuine NISSAN Long Life Antifreeze/Coolant (blue) or equivalent with the proper mixture. (Refer to "Engine cooling system" (P.8-4) to determine the proper mixture for your area.)

**NOTE:**

**Mixing any other type of coolant or the use of non-distilled water may reduce the recommended service interval of the coolant.**

**Engine oil and oil filter:**

Replace engine oil and oil filter at the specified intervals. For recommended oil grade and viscosity refer to "Capacities and recommended fluids/lubricants" (P.10-2).

**Evaporative Emissions Control Vapor Lines*:**

Check vapor lines for leaks or looseness. Tighten connections or replace parts as necessary.

**Fuel lines*:**

Check the fuel hoses, piping and connections for leaks, looseness, or deterioration. Tighten connections or replace parts as necessary.

**Spark plugs:**

Replace at specified intervals. Install new plugs of the type as originally equipped.

## CHASSIS AND BODY MAINTENANCE

**Brake lines and cables:**

Visually inspect for proper installation. Check for chafing, cracks, deterioration, and signs of leaking. Replace any deteriorated or damaged parts immediately.

**Brake pads and rotors:**

Check for wear, deterioration and fluid leaks. Replace any deteriorated or damaged parts immediately.

**Exhaust system:**

Visually inspect the exhaust pipes, muffler and hangers for leaks, cracks, deterioration, and damage. Tighten connections or replace parts as necessary.

**In-cabin microfilter:**

Replace at specified intervals. When driving for prolonged periods in dusty conditions, replace the filter more frequently.

**Steering gear and linkage, axle and suspension parts:**

Check for damage, looseness, and leakage of oil or grease. Under severe driving conditions, inspect more frequently.

**Tire rotation:**

Tires cannot be rotated, as the front tires are a different size from the rear tires and the direction of wheel rotation is fixed in each tire.

**Transmission fluid/oil, differential oil:**

Visually inspect for signs of leakage at specified intervals.

# MAINTENANCE SCHEDULES

To help ensure smooth, safe and economical driving, NISSAN provides two maintenance schedules that may be used, depending upon the conditions in which you usually drive. These schedules contain both distance and time intervals, up to 120,000 miles (192,000 km)/144 months. For most people, the odometer reading will indicate when service is needed. However, if you drive very little, your vehicle should be serviced at the regular time intervals shown in the schedule.

**After 120,000 miles (192,000 km)/144 months, continue maintenance at the same mileage/time intervals.**

## ADDITIONAL MAINTENANCE ITEMS FOR SEVERE OPERATING CONDITIONS

**Additional maintenance items for severe operating conditions;** should be performed on vehicles that are driven under especially demanding conditions. Additional maintenance items should be performed if you primarily operate your vehicle under the following conditions:

- Repeated short trips of less than 5 miles (8 km).
- Repeated short trips of less than 10 miles (16 km) with outside temperatures remaining below freezing.

- Operating in hot weather in stop-and-go "rush hour" traffic.
- Extensive idling and/or low speed driving for long distances, such as police, taxi or door-to-door delivery use.
- Driving in dusty conditions.
- Driving on rough, muddy or salt spread roads.
- Using a car-top carrier.

**NOTE:**

**For vehicles operated in Canada, both standard and severe maintenance items should be performed at every interval.**

## STANDARD MAINTENANCE

The following tables show the standard maintenance schedule. Depending upon weather and atmospheric conditions, varying road surfaces, individual driving habits and vehicle usage, additional or more frequent maintenance may be required.

**After 120,000 miles (192,000 km)/144 months, continue maintenance at the same mileage/time intervals.**

## EMISSION CONTROL SYSTEM MAINTENANCE

Abbreviations: I = Inspect and correct or replace as necessary, R = Replace

| **MAINTENANCE OPERATION** Perform at number of miles, kilometers or months, whichever comes first. | Miles × 1,000 (km × 1,000) Months | MAINTENANCE INTERVAL | | | | | | | | | | | |
|---|---|---|---|---|---|---|---|---|---|---|---|---|---|
| | | 5 (8) 6 | 10 (16) 12 | 15 (24) 18 | 20 (32) 24 | 25 (40) 30 | 30 (48) 36 | 35 (56) 42 | 40 (64) 48 | 45 (72) 54 | 50 (80) 60 | 55 (88) 66 | 60 (96) 72 |
| Drive belts | See NOTE (1) | | | | | | | | I* | | I* | | I* |
| Air cleaner filter | See NOTE (2) | | | | | | R | | | | | | R |
| EVAP vapor lines | | | | | I* | | | | I* | | | | I* |
| Fuel lines | | | | | I* | | | | I* | | | | I* |
| Fuel filter | See NOTE (3) | | | | | | | | | | | | |
| Engine coolant* | See NOTE (4)(5) | | | | | | | | | | | | |
| Engine oil | | R | R | R | R | R | R | R | R | R | R | R | R |
| Engine oil filter | | R | R | R | R | R | R | R | R | R | R | R | R |
| Spark plugs | See NOTE (6) | Replace every 105,000 miles (168,000 km) | | | | | | | | | | | |
| Intake and exhaust valve clearance* | See NOTE (7) | | | | | | | | | | | | |

| **MAINTENANCE OPERATION** Perform at number of miles, kilometers or months, whichever comes first. | Miles × 1,000 (km × 1,000) Months | MAINTENANCE INTERVAL | | | | | | | | | | | |
|---|---|---|---|---|---|---|---|---|---|---|---|---|---|
| | | 65 (104) 78 | 70 (112) 84 | 75 (120) 90 | 80 (128) 96 | 85 (136) 102 | 90 (144) 108 | 95 (152) 114 | 100 (160) 120 | 105 (168) 126 | 110 (176) 132 | 115 (184) 138 | 120 (192) 144 |
| Drive belts | See NOTE (1) | | I* | | I* | | I* | | I* | | I* | | I* |
| Air cleaner filter | See NOTE (2) | | | | | | R | | | | | | R |
| EVAP vapor lines | | | | | I* | | | | I* | | | | I* |
| Fuel lines | | | | | I* | | | | I* | | | | I* |
| Fuel filter | See NOTE (3) | | | | | | | | | | | | |
| Engine coolant* | See NOTE (4)(5) | | | | | | | | | | | | |
| Engine oil | | R | R | R | R | R | R | R | R | R | R | R | R |
| Engine oil filter | | R | R | R | R | R | R | R | R | R | R | R | R |
| Spark plugs | See NOTE (6) | Replace every 105,000 miles (168,000 km) | | | | | | | | | | | |
| Intake and exhaust valve clearance* | See NOTE (7) | | | | | | | | | | | | |

**NOTE:**

**(1) After 40,000 miles (64,000 km) or 48 months, inspect every 10,000 miles (16,000 km) or 12 months. Replace the drive belts if found damaged.**

**(2) If operating mainly in dusty conditions, more frequent maintenance may be required.**

**(3) Periodic maintenance is not required.**

**(4) First replacement interval is 105,000 miles (168,000 km) or 84 months. After first replacement, replace every 75,000 miles (120,000 km) or 60 months.**

**(5) Use only Genuine NISSAN Long Life Antifreeze/Coolant (blue) or equivalent with proper mixture ratio of 50% antifreeze and 50% demineralized or distilled water. Mixing any other type of coolant or the use of non-distilled water may reduce the life expectancy of the factory fill coolant.**

**(6) Replace spark plug when the plug gap exceeds 0.055 in (1.4 mm) even if within specified replacement mileage.**

**(7) Periodic maintenance is not required. However, if valve noise increases, inspect valve clearance.**

***: Maintenance items and intervals with "*" are recommended by NISSAN for reliable vehicle operation. The owner does not need to perform such maintenance in order to maintain the emis-**

**sion warranty or manufacturer recall liability. Other maintenance items and intervals are required.**

## CHASSIS AND BODY MAINTENANCE

Abbreviations: I = Inspect and correct or replace as necessary, R = Replace

| **MAINTENANCE OPERATION** Perform at of miles, kilometers or months, whichever comes first. | Miles × 1,000 (km × 1,000) Months | MAINTENANCE INTERVAL | | | | | | | | | | | |
|---|---|---|---|---|---|---|---|---|---|---|---|---|---|
| | | 5 (8) 6 | 10 (16) 12 | 15 (24) 18 | 20 (32) 24 | 25 (40) 30 | 30 (48) 36 | 35 (56) 42 | 40 (64) 48 | 45 (72) 54 | 50 (80) 60 | 55 (88) 66 | 60 (96) 72 |
| Brake lines and cables | | | I | | I | | I | | I | | I | | I |
| Brake pads and rotors★ | | | I | | I | | I | | I | | I | | I |
| Brake fluid★ | | | | | R | | | | R | | | | R |
| Automatic transmission fluid | See NOTE (1) | | | | | | | | | | | | |
| Manual transmission gear oil and differential gear oil | See NOTE (2) | | I | | I | | I | | I | | I | | I |
| Steering gear and linkage, axle and suspension parts★ | | | | | I | | | | I | | | | I |
| Tire rotation | See NOTE (3) | | | | | | | | | | | | |
| Exhaust system★ | | | | | I | | | | I | | | | I |
| In-cabin microfilter | | | | R | | | R | | | R | | | R |
| Intelligent Key battery | | | | R | | | R | | | R | | | R |

| **MAINTENANCE OPERATION** Perform at of miles, kilometers or months, whichever comes first. | Miles × 1,000 (km × 1,000) Months | MAINTENANCE INTERVAL | | | | | | | | | | | |
|---|---|---|---|---|---|---|---|---|---|---|---|---|---|
| | | 65 (104) 78 | 70 (112) 84 | 75 (120) 90 | 80 (128) 96 | 85 (136) 102 | 90 (144) 108 | 95 (152) 114 | 100 (160) 120 | 105 (168) 126 | 110 (176) 132 | 115 (184) 138 | 120 (192) 144 |
| Brake lines & cables | | | I | | I | | I | | I | | I | | I |
| Brake pads & rotors★ | | | I | | I | | I | | I | | I | | I |
| Brake fluid★ | | | | | R | | | | R | | | | R |
| Automatic transmission fluid | See NOTE (1) | | | | | | | | | | | | |
| Manual transmission gear oil & differential gear oil | See NOTE (2) | | I | | I | | I | | I | | I | | I |
| Steering gear & linkage, axle & suspension parts★ | | | | | I | | | | I | | | | I |
| Tire rotation | See NOTE (3) | | | | | | | | | | | | |
| Exhaust system★ | | | | | I | | | | I | | | | I |
| In-cabin microfilter | | | | R | | | R | | | R | | | R |
| Intelligent Key battery | | | | R | | | R | | | R | | | R |

**NOTE:**

**Maintenance items with "★" should be performed more frequently according to "Maintenance under severe driving conditions" (P.9-13).**

**(1) Periodic maintenance is not required.**

**(2) If using a car-top carrier, or driving on rough or muddy roads, change (not just inspect) oil at every 20,000 miles (32,000 km) or 24 months.**

**(3) Refer to "Tire rotation" under "General maintenance" (P.9-2).**

## MAINTENANCE UNDER SEVERE DRIVING CONDITIONS

The maintenance intervals shown on the preceding pages are for normal operating conditions. If the vehicle is mainly operated under severe driving conditions as shown below, more frequent maintenance must be performed on the following items as shown in the table.

**Severe driving conditions**

- Repeated short trips of less than 5 miles (8 km).
- Repeated short trips of less than 10 miles (16 km) with outside temperatures remaining below freezing.
- Operating in hot weather in stop-and-go "rush hour" traffic.
- Extensive idling and/or low speed driving for long distances, such as police, taxi or door-to-door delivery use.
- Driving in dusty conditions.
- Driving on rough, muddy, or salt spread roads.
- Using a car-top carrier.

Maintenance operation: Inspect = Inspect and correct or replace as necessary.

| Maintenance item | Maintenance operation | Maintenance interval |
|---|---|---|
| Brake fluid | Replace | Every 10,000 miles (16,000 km) or 12 months |
| Brake pads & rotors | Inspect | Every 5,000 miles (8,000 km) or 6 months |
| Steering gear & linkage, axle & suspension parts | Inspect | Every 5,000 miles (8,000 km) or 6 months |
| Exhaust system | Inspect | Every 5,000 miles (8,000 km) or 6 months |

## MAINTENANCE LOG

| | | |
|---|---|---|
| **5,000 Miles or 6 Months**<br><br>Dealer Name:<br><br>Date:<br><br>Mileage:<br><br>Dealer<br>Stamp: | **10,000 Miles or 12 Months**<br><br>Dealer Name:<br><br>Date:<br><br>Mileage:<br><br>Dealer<br>Stamp: | **15,000 Miles or 18 Months**<br><br>Dealer Name:<br><br>Date:<br><br>Mileage:<br><br>Dealer<br>Stamp: |
| **20,000 Miles or 24 Months**<br><br>Dealer Name:<br><br>Date:<br><br>Mileage:<br><br>Dealer<br>Stamp: | **25,000 Miles or 30 Months**<br><br>Dealer Name:<br><br>Date:<br><br>Mileage:<br><br>Dealer<br>Stamp: | **30,000 Miles or 36 Months**<br><br>Dealer Name:<br><br>Date:<br><br>Mileage:<br><br>Dealer<br>Stamp: |
| **35,000 Miles or 42 Months**<br><br>Dealer Name:<br><br>Date:<br><br>Mileage:<br><br>Dealer<br>Stamp: | **40,000 Miles or 48 Months**<br><br>Dealer Name:<br><br>Date:<br><br>Mileage:<br><br>Dealer<br>Stamp: | **45,000 Miles or 54 Months**<br><br>Dealer Name:<br><br>Date:<br><br>Mileage:<br><br>Dealer<br>Stamp: |

| | | |
|---|---|---|
| **50,000 Miles or 60 Months**<br><br>Dealer Name:<br><br>Date:<br><br>Mileage:<br><br>Dealer<br>Stamp: | **55,000 Miles or 66 Months**<br><br>Dealer Name:<br><br>Date:<br><br>Mileage:<br><br>Dealer<br>Stamp: | **60,000 Miles or 72 Months**<br><br>Dealer Name:<br><br>Date:<br><br>Mileage:<br><br>Dealer<br>Stamp: |
| **65,000 Miles or 78 Months**<br><br>Dealer Name:<br><br>Date:<br><br>Mileage:<br><br>Dealer<br>Stamp: | **70,000 Miles or 84 Months**<br><br>Dealer Name:<br><br>Date:<br><br>Mileage:<br><br>Dealer<br>Stamp: | **75,000 Miles or 90 Months**<br><br>Dealer Name:<br><br>Date:<br><br>Mileage:<br><br>Dealer<br>Stamp: |
| **80,000 Miles or 96 Months**<br><br>Dealer Name:<br><br>Date:<br><br>Mileage:<br><br>Dealer<br>Stamp: | **85,000 Miles or 102 Months**<br><br>Dealer Name:<br><br>Date:<br><br>Mileage:<br><br>Dealer<br>Stamp: | **90,000 Miles or 108 Months**<br><br>Dealer Name:<br><br>Date:<br><br>Mileage:<br><br>Dealer<br>Stamp: |

| | | |
|---|---|---|
| **95,000 Miles or 114 Months**<br><br>Dealer Name:<br><br>Date:<br><br>Mileage:<br><br>Dealer<br>Stamp: | **100,000 Miles or 120 Months**<br><br>Dealer Name:<br><br>Date:<br><br>Mileage:<br><br>Dealer<br>Stamp: | **105,000 Miles or 126 Months**<br><br>Dealer Name:<br><br>Date:<br><br>Mileage:<br><br>Dealer<br>Stamp: |
| **110,000 Miles or 132 Months**<br><br>Dealer Name:<br><br>Date:<br><br>Mileage:<br><br>Dealer<br>Stamp: | **115,000 Miles or 138 Months**<br><br>Dealer Name:<br><br>Date:<br><br>Mileage:<br><br>Dealer<br>Stamp: | **120,000 Miles or 144 Months**<br><br>Dealer Name:<br><br>Date:<br><br>Mileage:<br><br>Dealer<br>Stamp: |
| **125,000 Miles or 150 Months**<br><br>Dealer Name:<br><br>Date:<br><br>Mileage:<br><br>Dealer<br>Stamp: | **130,000 Miles or 156 Months**<br><br>Dealer Name:<br><br>Date:<br><br>Mileage:<br><br>Dealer<br>Stamp: | **135,000 Miles or 162 Months**<br><br>Dealer Name:<br><br>Date:<br><br>Mileage:<br><br>Dealer<br>Stamp: |

| 140,000 Miles or 168 Months | 145,000 Miles or 174 Months | 150,000 Miles or 180 Months |
|---|---|---|
| Dealer Name: | Dealer Name: | Dealer Name: |
| Date: | Date: | Date: |
| Mileage: | Mileage: | Mileage: |
| Dealer Stamp: | Dealer Stamp: | Dealer Stamp: |

**MEMO**

# 10 Technical and consumer information


Capacities and recommended fluids/lubricants ..... 10-2
- Fuel information ..... 10-4
- Engine oil and oil filter recommendation ..... 10-7
- Air conditioning system refrigerant and lubricant recommendations ..... 10-8

Specifications ..... 10-9
- Engine ..... 10-9
- Wheels and tires ..... 10-10
- Dimensions ..... 10-11

When traveling or registering in another country ..... 10-12

Vehicle identification ..... 10-12
- Vehicle Identification Number (VIN) plate ..... 10-12
- Vehicle identification number (chassis number) ..... 10-12
- Engine serial number ..... 10-13
- F.M.V.S.S./C.M.V.S.S. certification label ..... 10-13
- Emission control information label ..... 10-13
- Tire and Loading Information label ..... 10-14
- Air conditioner specification label ..... 10-14

Installing front license plate ..... 10-15
- Except for NISMO models ..... 10-15
- For NISMO models ..... 10-17

Removing air deflectors (except for NISMO models) ..... 10-18

Vehicle loading information ..... 10-19
- Terms ..... 10-19
- Vehicle load capacity ..... 10-20
- Loading tips ..... 10-21
- Measurement of weights ..... 10-21

Towing a trailer ..... 10-22

Flat towing ..... 10-22
- Automatic transmission ..... 10-22
- Manual transmission ..... 10-22

Uniform tire quality grading ..... 10-23
- Treadwear ..... 10-23
- Traction AA, A, B and C ..... 10-23
- Temperature A, B and C ..... 10-23

Emission control system warranty ..... 10-24

Reporting safety defects ..... 10-24

Readiness for Inspection/Maintenance (I/M) test ..... 10-25

Event Data Recorders (EDR) ..... 10-25

Owner's Manual/Service Manual order information ..... 10-26

# CAPACITIES AND RECOMMENDED FLUIDS/LUBRICANTS

**The following are approximate capacities. The actual refill capacities may be a little different. When refilling, follow the procedure instructed in the "8. Do-it-yourself" section to determine the proper refill capacity.**

| Fluid type | | | Capacity (approximate) | | | Recommended Fluids/Lubricants |
|---|---|---|---|---|---|---|
| | | | Metric Measure | US Measure | Imperial Measure | |
| Fuel | | | 71.9 L | 19 gal | 15-7/8 gal | · See "Fuel information" (P.10-4). |
| Engine oil*1<br>Drain and refill<br>*1: For additional information, see "Changing engine oil and filter" (P.8-6). | With oil filter change | | 4.9 L | 5-1/8 qt | 4-3/8 qt | · Genuine "NISSAN Motor Oil Ester 5W-30 SN" is recommended.<br>· If the above motor oil is not available, use an equivalent motor oil that matches the above grade and viscosity. For additional information, see "Engine oil and oil filter recommendation" (P.10-7). |
| | Without oil filter change | | 4.6 L | 4-7/8 qt | 4 qt | |
| Engine coolant | With reservoir | Automatic Transmission model | 9.1 L | 9-5/8 qt | 8 qt | · Pre-diluted Genuine NISSAN Long Life Antifreeze/Coolant (blue) or equivalent |
| | | Manual Transmission model | 9.2 L | 9-3/4 qt | 8-1/8 qt | |
| | Reservoir | | 0.8 L | 7/8 qt | 3/4 qt | |
| Automatic Transmission fluid | | | — | — | — | · Genuine NISSAN Matic S ATF<br>· NISSAN recommends using Genuine NISSAN Matic S ATF ONLY in NISSAN automatic transmissions. Do not mix with other fluids. Using fluids that are not equivalent to Genuine NISSAN Matic S ATF may damage the automatic transmission. Damage caused by the use of fluids other than as recommended is not covered under the warranty. |
| Manual Transmission gear oil | | | — | — | — | · Genuine NISSAN Manual Transmission Fluid (MTF) HQ Multi 75W-85 or equivalent<br>· If Genuine NISSAN Manual Transmission Fluid (MTF) HQ Multi is not available, API GL-4, Viscosity SAE 75W-85 may be used as a temporary replacement. However, use Genuine NISSAN Manual Transmission Fluid (MTF) HQ Multi as soon as it is available. |
| Differential gear oil | | | — | — | — | For AT and NISMO models:<br>· API GL-5 synthetic gear oil, Viscosity SAE 75W-90<br>Except for AT and NISMO models:<br>· Genuine NISSAN Differential Oil Hypoid Super GL-5 80W-90 or equivalent conventional (non-synthetic) oil |
| Power steering fluid (PSF) | | | Refill to the proper oil level according to the instructions in the "8. Do-it-yourself" section. | | | · Genuine NISSAN PSF or equivalent<br>· DEXRON™ VI type ATF may also be used. |

| Fluid type | Capacity (approximate) | | | Recommended Fluids/Lubricants |
|---|---|---|---|---|
| | Metric Measure | US Measure | Imperial Measure | |
| Brake fluid | Refill to the proper oil level according to the instructions in the "8. Do-it-yourself" section. | | | For NISMO models:<br>· Genuine NISSAN Brake Fluid R35 Special II *2 *3<br>*2: Never mix different types of fluids.<br>*3: Genuine NISSAN Brake Fluid R35 Special II is the factory fill brake fluid. The Vehicle Dynamic Control (VDC) unit and other related parts were specially designed for this brake fluid. Using any other non-equivalent fluid may result in improper operation of the brake system which could result in serious injury or death.<br>Except for NISMO models:<br>· Genuine NISSAN Super Heavy Duty Brake Fluid*4 or equivalent DOT3<br>*4: Available in mainland USA through a NISSAN dealer. |
| Clutch fluid | | | | · Genuine NISSAN Brake Fluid R35 Special II*5 *6 or equivalent DOT4<br>*5: Never mix different types of fluids.<br>*6: NISSAN recommends Genuine NISSAN Brake Fluid R35 Special II available at a NISSAN dealer. |
| Multi-purpose grease | — | — | — | · NLGI No. 2 (Lithium soap base) |
| Air conditioning system refrigerant | — | — | — | · HFC-134a (R-134a)<br>· For additional information, see "Vehicle identification" (P.10-12) for air conditioner specification label. |
| Air conditioning system lubricants | — | — | — | · NISSAN UV Luminous Oil Type S or exact equivalent |
| Window washer fluid | 4.5 | 4-3/4 | 4 | · Genuine NISSAN Windshield Washer Concentrate Cleaner & Antifreeze or equivalent |

## FUEL INFORMATION

### VQ37VHR engine

Use unleaded premium gasoline with an octane rating of at least 91 AKI (Anti-Knock Index) number (Research octane number 96).

If unleaded premium gasoline is not available, unleaded regular gasoline with an octane rating of at least 87 AKI number (Research octane number 91) may be temporarily used, but only under the following precautions:

- Have the fuel tank filled only partially with unleaded regular gasoline, and fill up with unleaded premium gasoline as soon as possible.
- Avoid full throttle driving and abrupt acceleration.

**Use unleaded premium gasoline for maximum vehicle performance.**

**CAUTION**

- **Using a fuel other than that specified could adversely affect the emission control system, and may also affect warranty coverage.**
- **Under no circumstances should a leaded gasoline be used, because this will damage the three-way catalyst.**
- **Do not use a fuel containing more than 15% ethanol in your vehicle. Your vehicle is not designed to run on a fuel containing more than 15% ethanol. Using a fuel containing more than 15% ethanol in a vehicle not specifically designed for a fuel containing more than 15% ethanol can adversely affect the emission control devices and systems of the vehicle. Damage caused by such fuel is not covered by the NISSAN new vehicle limited warranty.**
- **Do not use fuel that contains the octane booster methylcyclopentadienyl manganese tricarbonyl (MMT). Using fuel containing MMT may adversely affect vehicle performance and vehicle emissions. Not all fuel dispensers are labeled to indicate MMT content, so you may have to consult your gasoline retailer for more details. Note that Federal and California laws prohibit the use of MMT in reformulated gasoline.**
- **U.S. government regulations require ethanol dispensing pumps to be identified by a small, square, orange and black label with the common abbreviation or the appropriate percentage for that region.**

### Gasoline specifications

NISSAN recommends using gasoline that meets the World-Wide Fuel Charter (WWFC) specifications where it is available. Many of the automobile manufacturers developed this specification to improve emission system and vehicle performance. Ask your service station manager if the gasoline meets the World-Wide Fuel Charter (WWFC) specifications.

### Reformulated gasoline

Some fuel suppliers are now producing reformulated gasolines. These gasolines are specially designed to reduce vehicle emissions. NISSAN supports efforts towards cleaner air and suggests that you use reformulated gasoline when available.

## Gasoline containing oxygenates

Some fuel suppliers sell gasoline containing oxygenates such as ethanol, MTBE and methanol with or without advertising their presence. NISSAN does not recommend the use of fuels of which the oxygenate content and the fuel compatibility for your NISSAN cannot be readily determined. If in doubt, ask your service station manager.

If you use oxygenate-blend gasoline, please take the following precautions as the usage of such fuels may cause vehicle performance problems and/or fuel system damage.

- **The fuel should be unleaded and have an octane rating no lower than that recommended for unleaded gasoline.**
- **If an oxygenate-blend, excepting a methanol blend, is used, it should contain no more than 15% oxygenate.**
- **If a methanol blend is used, it should contain no more than 5% methanol (methyl alcohol, wood alcohol). It should also contain a suitable amount of appropriate cosolvents and corrosion inhibitors. If not properly formulated with appropriate cosolvents and corrosion inhibitors, such methanol blends may cause fuel system damage and/or vehicle performance problems. At this time, sufficient data is not available to ensure that all methanol blends are suitable for use in NISSAN vehicles.**

If any undesirable driveability problems such as engine stalling or hard hot starting are experienced after using oxygenate-blend fuels, immediately change to a non-oxygenate fuel or a fuel with a low blend of MTBE.

**Take care not to spill gasoline during refueling. Gasoline containing oxygenates can cause paint damage.**

## E-15 fuel

E-15 fuel is a mixture of approximately 15% fuel ethanol and 85% unleaded gasoline. E-15 can only be used in vehicles designed to run on E-15 fuel. U.S. government regulations require fuel ethanol dispensing pumps to be identified with small, square, orange and black label with the common abbreviation or the appropriate percentage for that region.

## E-85 fuel

E-85 fuel is a mixture of approximately 85% fuel ethanol and 15% unleaded gasoline. E-85 can only be used in a Flexible Fuel Vehicle (FFV). Do not use E-85 fuel in your vehicle. U.S. government regulations require fuel ethanol dispensing pumps to be identified by a small, square, orange and black label with the common abbreviation or the appropriate percentage for that region.

## Fuel containing MMT

MMT, or methylcyclopentadienyl manganese tricarbonyl, is an octane boosting additive. NISSAN does not recommend the use of fuel containing MMT. Such fuel may adversely affect vehicle performance, including the emissions control system. Note that while some fuel pumps label MMT content, not all do, so you may have to consult your gasoline retailer for more details.

## Aftermarket fuel additives

NISSAN does not recommend the use of any aftermarket fuel additives (Example: fuel injector cleaner, octane booster, intake valve deposit removers, etc.) which are sold commercially. Many of these additives intended for gum, varnish or deposit removal may contain active sol-

vent or similar ingredients that can be harmful to the fuel system and engine.

## Octane rating tips

**Using unleaded gasoline with an octane rating lower than recommended above can cause persistent, heavy spark knock. (Spark knock is a metallic rapping noise.) If severe, this can lead to engine damage. If you detect a persistent heavy spark knock even when using gasoline of the stated octane rating, or if you hear steady spark knock while holding a steady speed on level roads, it is recommended you have a NISSAN dealer correct the condition. Failure to correct the condition is misuse of the vehicle, for which NISSAN is not responsible.**

Incorrect ignition timing will result in knocking, after-run or overheating. This in turn may cause excessive fuel consumption or damage to the engine. If any of the above symptoms are encountered, have your vehicle checked at a NISSAN dealer or other competent service facility.

**However, now and then you may notice light spark knock for a short time while accelerating or driving up hills. This is no cause for concern, because you get the greatest fuel benefit when there is light spark knock for a short time under heavy engine load.**

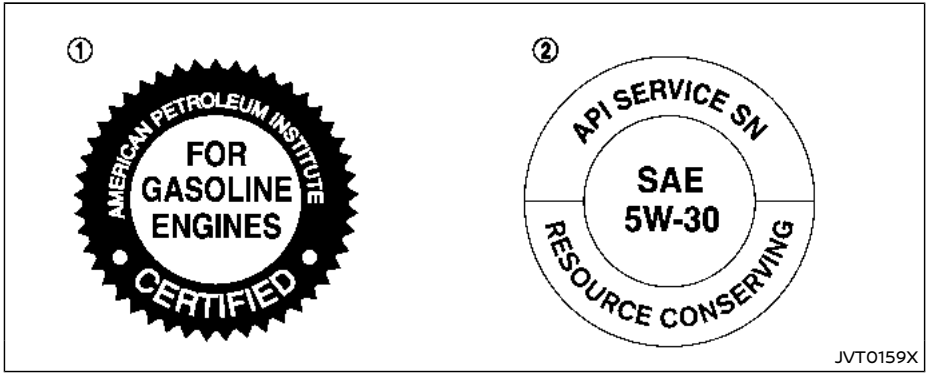


① API certification mark
② API service symbol

## ENGINE OIL AND OIL FILTER RECOMMENDATION

### Selecting the correct oil

It is essential to choose the correct grade, quality, and viscosity engine oil to ensure satisfactory engine life and performance, see "Capacities and recommended fluids/lubricants" (P.10-2). NISSAN recommends the use of an energy conserving oil in order to improve fuel economy.

Select only engine oils that meet the American Petroleum Institute (API) certification or International Lubricant Standardization and Approval Committee (ILSAC) certification and SAE viscosity standard. These oils have the API certification mark on the front of the container. Oils which do not have the specified quality label should not be used as they could cause engine damage.

### Oil additives

NISSAN does not recommend the use of oil additives. The use of an oil additive is not necessary when the proper oil type is used and maintenance intervals are followed.

Oil which may contain foreign matter or has been previously used should not be used.

### Oil viscosity

The engine oil viscosity or thickness changes with temperature. Because of this, it is important that the engine oil viscosity be selected based on the temperatures at which the vehicle will be operated before the next oil change. Choosing an oil viscosity other than that recommended could cause serious engine damage.

### Selecting the correct oil filter

Your new vehicle is equipped with a high-quality genuine NISSAN oil filter. When replacing, use the genuine oil filter or its equivalent for the reason described in change intervals.

### Change intervals

The oil and oil filter change intervals for your engine are based on the use of the specified quality oils and filters. Oil and filter other than the specified quality, or oil and filter change intervals longer than recommended could reduce engine life. Damage to engines caused by improper maintenance or use of incorrect oil and filter quality and/or viscosity is not covered by the new NISSAN vehicle limited warranties.

Your engine was filled with a high quality engine oil when it was built. You do not

have to change the oil before the first recommended change interval.

## AIR CONDITIONING SYSTEM REFRIGERANT AND LUBRICANT RECOMMENDATIONS

**The air conditioning system in your NISSAN vehicle must be charged with the refrigerant HFC-134a (R-134a) and the lubricant, NISSAN UV Luminous Oil Type S or the exact equivalents.**

**CAUTION**

**The use of any other refrigerant or lubricant may cause severe damage to the air conditioning system and may require the replacement of all air conditioner system components.**

The refrigerant HFC-134a (R-134a) in your NISSAN vehicle will not harm the earth's ozone layer. Although this refrigerant does not affect the earth's atmosphere, certain governmental regulations require the recovery and recycling of any refrigerant during automotive air conditioning system service. Your NISSAN dealer has the trained technicians and equipment needed to recover and recycle your air conditioning system refrigerant.

It is recommended you visit a NISSAN dealer when servicing your air conditioning system.

## SPECIFICATIONS

### ENGINE

| | | |
|---|---|---|
| Model | | VQ37VHR |
| Type | | Gasoline, 4-cycle |
| Cylinder arrangement | | 6-cylinder, V-slanted at 60° |
| Bore × Stroke | in (mm) | 3.760 × 3.385 (95.5 × 86.0) |
| Displacement | cu in ($cm^3$) | 225.54 (3,696) |
| Firing order | | 1-2-3-4-5-6 |
| Idle speed | rpm | No adjustment is necessary. |
| Ignition timing (B.T.D.C.) | degree/rpm | |
| Spark plug | Standard | FXE24HR-11 |
| Spark plug gap (Normal) | in (mm) | 0.043 (1.1) |
| Camshaft operation | | Timing chain |

**This spark ignition system complies with the Canadian standard ICES-002.**

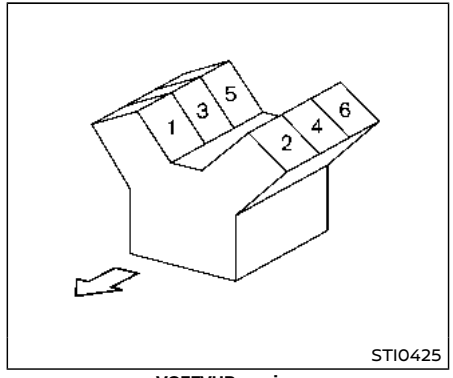


**VQ37VHR engine**

## WHEELS AND TIRES

### Road wheel

| Type | | Size | Offset in (mm) |
|---|---|---|---|
| Conventional | | Front: 18 × 8J<br>Rear: 18 × 9J | 1.69 (43)<br>0.59 (15) |
| | | Front: 19 × 9J<br>Rear: 19 × 10J | 1.85 (47)<br>1.18 (30) |
| | NISMO models | Front: 19 × 9.5J<br>Rear: 19 × 10.5J | 1.57 (40)<br>0.90 (23) |
| Spare | | 17 × 4T*1<br>18 × 4T*1 | 1.18 (30)<br>0 (0) |

*1: if so equipped

## Tire

| Type | | Size | Pressure PSI (kPa) [Cold] |
|---|---|---|---|
| Conventional | | Front: 225/50R18 95W<br>Rear: 245/45R18 96W | 35 (240)*2<br>38 (260)*3 |
| | | Front: 245/40R19 94W<br>Rear: 275/35R19 96W | 32 (220) |
| | NISMO models | Front: 245/40R19 98Y<br>Rear: 285/35R19 99Y | 35 (240) |
| Spare (T-type) | | T145/80D17 107M*1<br>T145/70R18 107M*1 | 60 (420) |
| | | —*3, *4 | |

*1: if so equipped
*2: Coupe models
*3: Roadster models
*4: The emergency tire puncture repair kit is supplied.

## DIMENSIONS

in (mm)

| | |
|---|---|
| Overall length | 167.6 (4,255)*1<br>167.7 (4,260)*2<br>170.5 (4,330)*3 |
| Overall width | 72.6 (1,845)<br>73.6 (1,870)*3 |
| Overall height | 51.8 (1,315)<br>52.2 (1,325)*4 |
| Front tread | 61.0 (1,550)*5<br>60.6 (1,540)*6<br>61.2 (1,555)*6, *3 |
| Rear tread | 62.8 (1,595)*5<br>61.6 (1,565)*6<br>62.2 (1,580)*6, *3 |
| Wheelbase | 100.4 (2,550) |

*1: Without front license plate bracket
*2: With front license plate bracket
*3: NISMO models
*4: Roadster models
*5: 18-inch wheel models
*6: 19-inch wheel models

## WHEN TRAVELING OR REGISTERING IN ANOTHER COUNTRY

**If you plan to travel in another country,** you should first find out if the fuel available is suitable for your vehicle's engine.

Using fuel with too low an octane rating may cause engine damage. All gasoline vehicles must be operated with unleaded gasoline. Therefore, avoid taking your vehicle to areas where appropriate fuel is not available.

**When transferring the registration of your vehicle to another country, state, province or district,** it may be necessary to modify the vehicle to meet local laws and regulations.

The laws and regulations for motor vehicle emission control and safety standards vary according to the country, state, province or district; therefore, vehicle specifications may differ.

**When any vehicle is to be taken into another country, state, province or district and registered, its modifications, transportation, and registration are the responsibility of the user. NISSAN is not responsible for any inconvenience that may result.**

## VEHICLE IDENTIFICATION

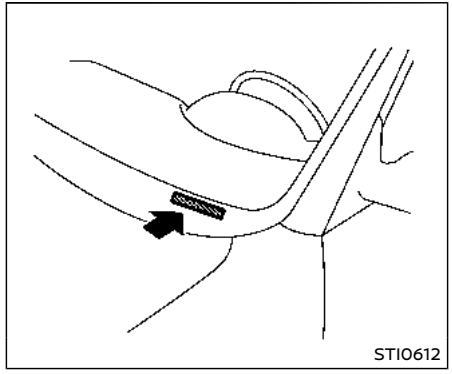


### VEHICLE IDENTIFICATION NUMBER (VIN) PLATE

The vehicle identification number plate is attached as shown. This number is the identification for your vehicle and is used in the vehicle registration.

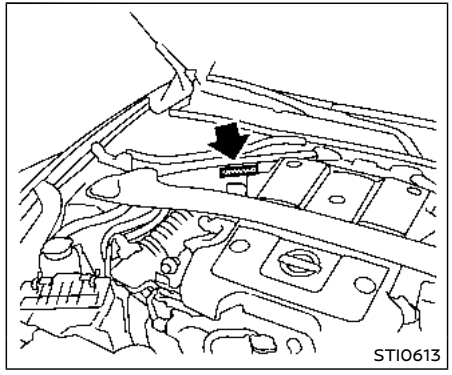


### VEHICLE IDENTIFICATION NUMBER (chassis number)

The number is stamped as shown in the engine compartment.

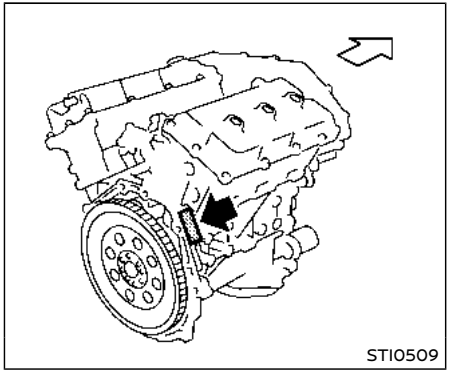


## ENGINE SERIAL NUMBER

The number is stamped on the engine as shown.

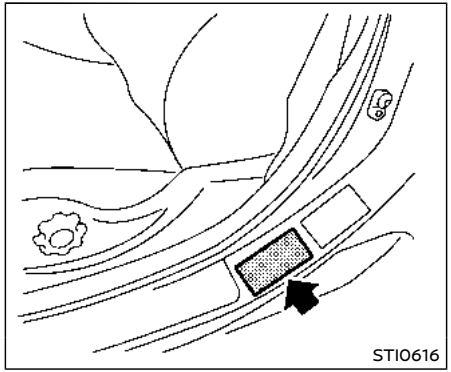


## F.M.V.S.S./C.M.V.S.S. CERTIFICATION LABEL

The Federal/Canadian Motor Vehicle Safety Standards (F.M.V.S.S./C.M.V.S.S.) certification label is affixed as shown. This label contains valuable vehicle information, such as: Gross Vehicle Weight Ratings (GVWR), Gross Axle Weight Rating (GAWR), month and year of manufacture, Vehicle Identification Number (VIN), etc. Review it carefully.

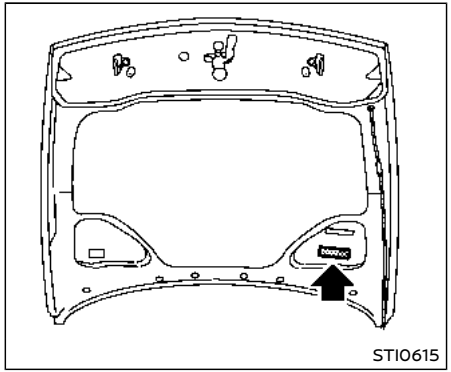


## EMISSION CONTROL INFORMATION LABEL

The emission control information label is attached as shown.

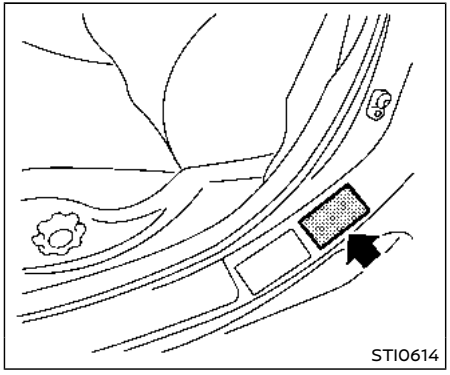


## TIRE AND LOADING INFORMATION LABEL

The cold tire pressure is shown on the Tire and Loading Information label affixed to the pillar as illustrated.

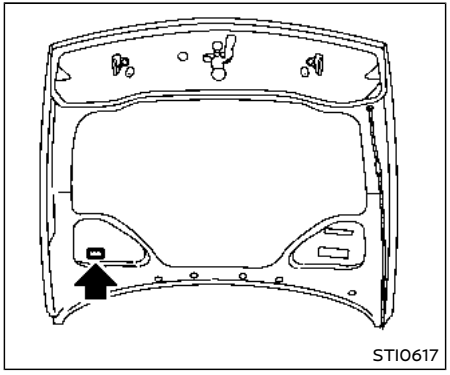


## AIR CONDITIONER SPECIFICATION LABEL

The air conditioner specification label is attached as shown.

## INSTALLING FRONT LICENSE PLATE

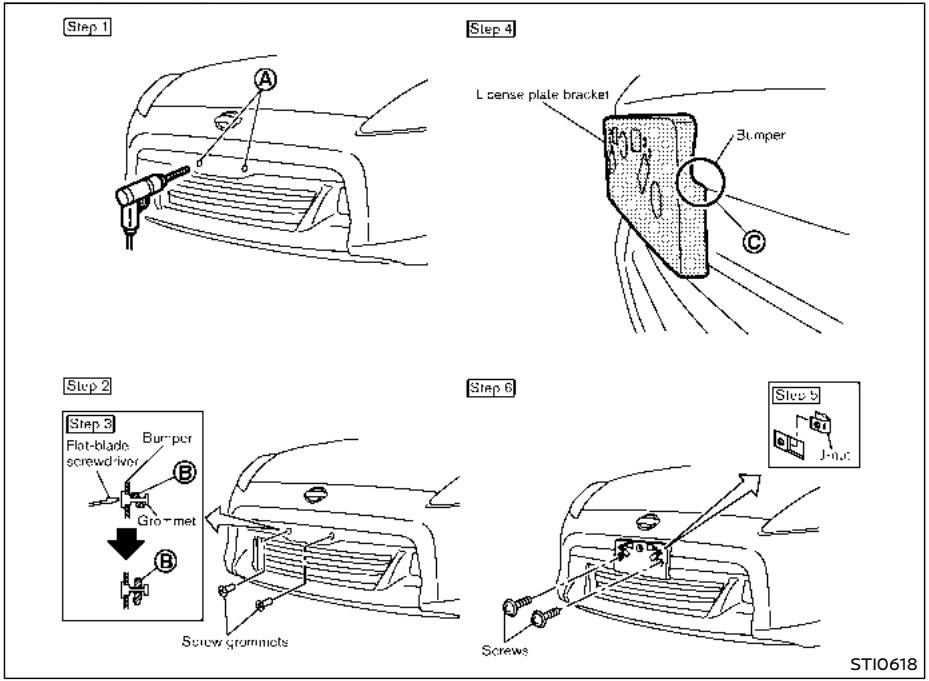


### EXCEPT FOR NISMO MODELS

Use the following steps to mount the license plate:

Before mounting the license plate, confirm that the following parts are enclosed in the plastic bag.

- License plate bracket
- J-nut × 2
- Screw × 2
- Screw grommet × 2

1. Park the vehicle on flat, level ground. Locate the two dents Ⓐ on the front bumper.

   Carefully drill two pilot holes using a 0.39 in (10 mm) drill bit. **(Be sure that the drill only goes through the bumper fascia.)**
2. Insert grommets into the hole on the bumper fascia.
3. Insert a flat-blade screwdriver into the grommet hole to add 90° turn onto the part Ⓑ.
4. Make sure the side end surface of the license plate bracket is aligned with the bumper Ⓒ.

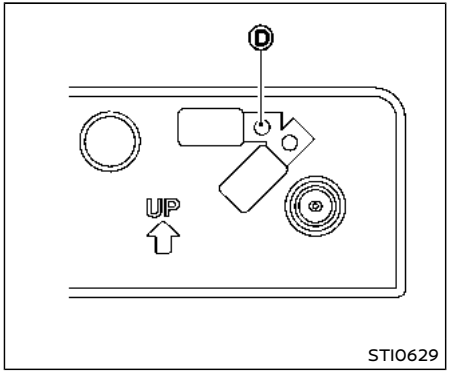


Mark the center of the hole Ⓓ on both sides with a felt-tip pen. Remove the bracket from the bumper, and then open 0.9 to 1.0 inch (22 to 25 mm) diameter holes on the bumper using the marks Ⓓ as a center.

5. Insert J-nuts into the license plate bracket before placing the license plate bracket on the fascia.
6. Install the license plate bracket with screws.
7. Install the license plate with bolts that are no longer than 0.55 in (14 mm).

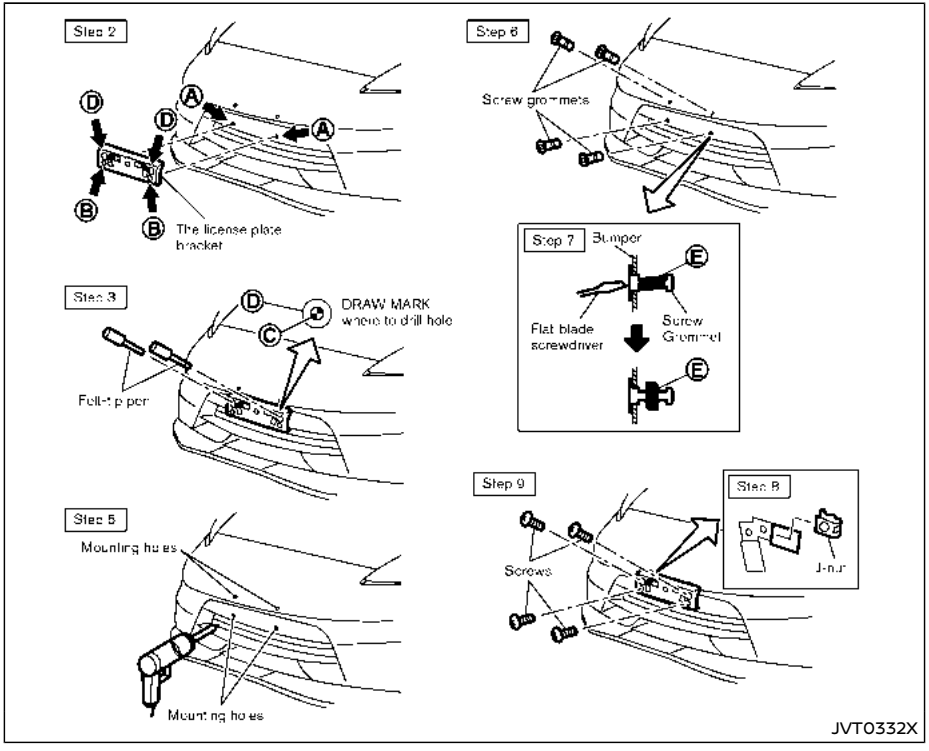

## FOR NISMO MODELS

Use the following steps to mount the license plate:

Before mounting the license plate, confirm that the following parts are enclosed in the vinyl bag.

- License plate bracket
- J-nut × 2
- Screw × 4
- Screw grommet × 4

1. Park the vehicle on flat, level ground.
2. Temporarily place the license plate bracket while aligning points Ⓐ of the front bumper fascia with holes Ⓑ in the license plate bracket.
3. Confirm that points Ⓐ and Ⓑ are aligned. Hold the license plate bracket and mark the points Ⓒ on the bumper facia through the center of the holes Ⓓ with a felt-tip pen.
4. Remove the license plate bracket.
5. Carefully drill two shallow pilot holes Ⓐ and Ⓒ using a 0.39 in (10 mm) drill bit at the marked locations. **(Be sure that the drill only goes through the fascia.)**
6. Insert grommets into the hole on the fascia.
7. Insert a flat-blade screwdriver into the grommet hole to add a 90° turn onto the part Ⓔ.
8. Insert a J-nut into the license plate bracket before placing the license plate bracket on the fascia.
9. Install the license plate bracket with the screws.
10. Install the license plate with bolts that are not longer than 0.55 in (14 mm).

## REMOVING AIR DEFLECTORS (except for NISMO models)

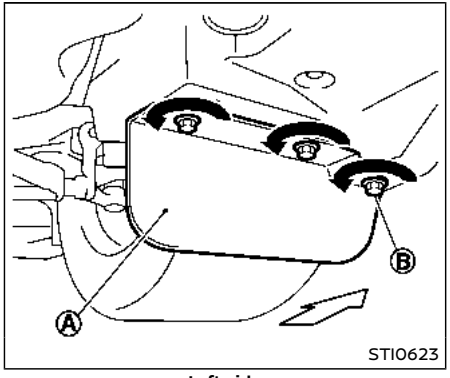


**Left side**

This vehicle is equipped with air deflectors in front of the front wheels. The deflectors will change the air flow to help improve aerodynamic performance.

When transporting your vehicle on a trailer, the air deflectors may interfere with a steep slope to a trailer bed. In this case, remove the deflectors from the undercover of the vehicle.

1. Loosen three screws as shown and remove the left-side air deflector Ⓐ.
2. Tighten the removed screw Ⓑ in its original position.
3. Perform the same procedure to remove the right-side air deflector.
4. Store the two air deflectors and four screws to reinstall in the reverse order.
5. When reinstalling, make sure all six screws are firmly tightened on both air deflectors.

**⚠ WARNING**

- **It is extremely dangerous to ride in a cargo area inside the vehicle. In a collision, people riding in these areas are more likely to be seriously injured or killed.**
- **Do not allow people to ride in any area of vehicle that is not equipped with seats and seat belts.**
- **Be sure everyone in your vehicle is in a seat and using a seat belt properly.**

TERMS

It is important to familiarize yourself with the following terms before loading your vehicle:

- Curb Weight (actual weight of your vehicle) - vehicle weight including: standard equipment, fluids, emergency tools, and spare tire assembly. This weight **does not** include passengers and cargo.
- GVW (Gross Vehicle Weight) - curb weight plus the combined weight of optional equipment, passengers and cargo.
- GVWR (Gross Vehicle Weight Rating) - maximum total combined weight of the unloaded vehicle, passengers, luggage, hitch, trailer tongue load and any other optional equipment. This information is located on the F.M.V.S.S./C.M.V.S.S. label.
- GAWR (Gross Axle Weight Rating) - maximum weight (load) limit specified for the front or rear axle. This information is located on the F.M.V.S.S./C.M.V.S.S. label.
- GCWR (Gross Combined Weight Rating) - The maximum total weight rating of the vehicle, passengers, cargo, and trailer.
- Vehicle Capacity Weight, Load limit, Total load capacity - maximum total weight limit specified of the load (passengers and cargo) for the vehicle. This is the maximum combined weight of occupants and cargo that can be loaded into the vehicle. If the vehicle is used to tow a trailer, the trailer tongue weight must be included as part of the cargo load. This information is located on the Tire and Loading Information label.
- Cargo capacity - permissible weight of cargo, the weight of total occupants weight subtracted from the load limit.

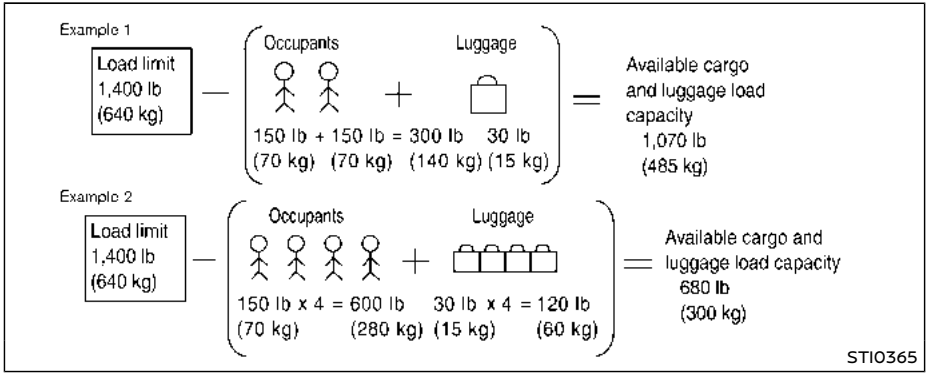


VEHICLE LOAD CAPACITY

Do not exceed the load limit of your vehicle shown as "The combined weight of occupants and cargo" on the Tire and Loading Information label. Do not exceed the number of occupants shown as "Seating Capacity" on the Tire and Loading Information label.

To get "the combined weight of occupants and cargo", add the weight of all occupants, then add the total luggage weight. Examples are shown in the illustration.

Steps for determining correct load limit

1. Locate the statement "The combined weight of occupants and cargo should never exceed XXX kg or XXX lbs" on your vehicle's placard.
2. Determine the combined weight of the driver and passengers that will be riding in your vehicle.
3. Subtract the combined weight of the driver and passengers from XXX kg or XXX lbs.
4. The resulting figure equals the available amount of cargo and luggage load capacity. For example, if the XXX amount equals 1400 lbs. and there will be five 150 lb. passengers in your vehicle, the amount of available cargo and luggage load capacity is 650 lbs. (1400 – 750 (5 x 150) = 650 lbs or 640 – 340 (5 x 70) = 300 kg.)
5. Determine the combined weight of luggage and cargo being loaded on the vehicle. That weight may not safely exceed the available cargo and luggage load capacity calculated in Step 4.
6. If your vehicle will be towing a trailer, load from your trailer will be transferred to your vehicle. Consult this manual to determine how this reduces the available cargo and luggage load capacity of your vehicle.

Before driving a loaded vehicle, confirm that you do not exceed

the Gross Vehicle Weight Rating (GVWR) or the Gross Axle Weight Rating (GAWR) for your vehicle. (See "Measurement of weights" (P.10-21).)

Also check tires for proper inflation pressures. See the Tire and Loading Information label.

LOADING TIPS

- The GVW must not exceed GVWR or GAWR as specified on the F.M.V.S.S./C.M.V.S.S. certification label.
- Do not load the front and rear axle to the GAWR. Doing so will exceed the GVWR.

**WARNING**

- **Properly secure all cargo to help prevent it from sliding or shifting. Do not place cargo higher than the seatbacks. In a sudden stop or collision, unsecured cargo could cause personal injury.**
- **Do not load your vehicle any heavier than the GVWR or the maximum front and rear GAWRs. If you do, parts of your vehicle can break, tire damage could occur, or it can change the way your vehicle handles. This could result in loss of control and cause personal injury.**
- **Overloading could not only shorten the life of your vehicle and the tires, but also could lead to hazardous vehicle handling and long braking distance. This may cause a premature tire malfunction, which could result in a serious accident and personal injury. Failures caused by overloading are not covered by the vehicle's warranty.**

MEASUREMENT OF WEIGHTS

Secure loose items to prevent weight shifts that could affect the balance of your vehicle. When the vehicle is loaded, drive to a scale and weigh the front and the rear wheels separately to determine axle loads. Individual axle loads should not exceed either of the gross axle weight ratings (GAWR). The total of the axle loads should not exceed the gross vehicle weight rating (GVWR). These ratings are given on the vehicle certification label. If weight ratings are exceeded, move or remove items to bring all weights below the ratings.

## TOWING A TRAILER

**Do not tow a trailer with your vehicle.**

## FLAT TOWING

Towing your vehicle with all four wheels on the ground is sometimes called flat towing. This method is sometimes used when towing a vehicle behind a recreational vehicle, such as a motor home.

**CAUTION**

- **Failure to follow these guidelines can result in severe transmission damage.**
- **Whenever flat towing your vehicle, always tow forward, never backward.**
- **DO NOT tow any automatic transmission vehicle with all four wheels on the ground (flat towing). Doing so WILL DAMAGE internal transmission parts due to lack of transmission lubrication.**
- **For emergency towing procedures refer to "Towing your vehicle" (P.6-19) of this manual.**

### AUTOMATIC TRANSMISSION

To tow a vehicle equipped with an automatic transmission, an appropriate vehicle dolly **MUST** be placed under the towed vehicle's drive wheels. **Always** follow the dolly manufacturer's recommendations when using their product.

### MANUAL TRANSMISSION

- Always tow with the manual transmission in Neutral.
- Your vehicle speed should never exceed 70 MPH (112 km/h) when flat towing your vehicle.
- After towing 500 miles, start and idle the engine with the transmission in Neutral for two minutes. Failure to idle the engine after every 500 miles of towing may cause damage to the transmission's internal parts.

## UNIFORM TIRE QUALITY GRADING

DOT (Department Of Transportation) Quality Grades: All passenger car tires must conform to federal safety requirements in addition to these grades.

Quality grades can be found where applicable on the tire sidewall between tread shoulder and maximum section width. For example:

**Treadwear 200 Traction AA Temperature A**

### TREADWEAR

The treadwear grade is a comparative rating based on the wear rate of the tire when tested under controlled conditions on a specified government test course. For example, a tire graded 150 would wear one and one-half (1 1/2) times as well on the government course as a tire graded 100. The relative performance of tires depends upon actual conditions of their use, however, and may depart significantly from the norm due to variations in driving habits, service practices and differences in road characteristics and climate.

### TRACTION AA, A, B AND C

The traction grades, from highest to lowest, are AA, A, B and C. Those grades represent the tire's ability to stop on wet pavement as measured under controlled conditions on specified government test surfaces of asphalt and concrete. A tire marked C may have poor traction performance.

**WARNING**

**The traction grade assigned to this tire is based on straight-ahead braking traction tests, and does not include acceleration, cornering, hydroplaning, or peak traction characteristics.**

### TEMPERATURE A, B AND C

The temperature grades A (the highest), B, and C, representing the tire's resistance to the generation of heat and its ability to dissipate heat when tested under controlled conditions on a specified indoor laboratory test wheel. Sustained high temperature can cause the material of the tire to degenerate and reduce tire life, and excessive temperature can lead to sudden tire failure. The grade C corresponds to a level of performance which all passenger car tires must meet under the Federal Motor Vehicle Safety Standard No. 109. Grades B and A represent higher levels of performance on the laboratory test wheel than the minimum required by law.

**WARNING**

**The temperature grade for this tire is established for a tire that is properly inflated and not overloaded. Excessive speed, under-inflation, or excessive loading, either separately or in combination, can cause heat build-up and possible tire failure.**

## EMISSION CONTROL SYSTEM WARRANTY

Your NISSAN is covered by the following emission warranties.

**For USA:**

- Emission Defects Warranty
- Emissions Performance Warranty

Details of these warranties may be found with other vehicle warranties in your Warranty Information Booklet which comes with your NISSAN. If you did not receive a Warranty Information Booklet, or it is lost, you may obtain a replacement by writing to:

- Nissan North America, Inc.
  Consumer Affairs Department
  P.O. Box 685003
  Franklin, TN 37068-5003

**For Canada:**

Emission Control System Warranty

Details of this warranty may be found with other vehicle warranties in your Warranty Information Booklet which comes with your NISSAN. If you did not receive a Warranty Information Booklet, or it is lost, you may obtain a replacement by writing to:

- Nissan Canada Inc.
  5290 Orbitor Drive
  Mississauga, Ontario,
  L4W 4Z5

## REPORTING SAFETY DEFECTS

For USA

If you believe that your vehicle has a defect which could cause a crash or could cause injury or death, you should immediately inform the National Highway Traffic Safety Administration (NHTSA) in addition to notifying NISSAN.

If NHTSA receives similar complaints, it may open an investigation, and if it finds that a safety defect exists in a group of vehicles, it may order a recall and remedy campaign. However, NHTSA cannot become involved in individual problems between you, your dealer, or NISSAN.

To contact NHTSA, you may call the Vehicle Safety Hotline toll-free at 1-888- 327-4236 (TTY: 1-800-424-9153); go to http://www.safercar.gov; or write to: Administrator, NHTSA, 400 Seventh Street, SW., Washington, D.C. 20590. You can also obtain other information about motor vehicle safety from

http://www.safercar.gov.

You may notify NISSAN by contacting our Consumer Affairs Department, toll-free, at 1-800-NISSAN-1.

For Canada

If you believe that your vehicle has a defect which could cause a crash or could cause injury or death, you should immediately inform Transport Canada in addition to notifying NISSAN.

If Transport Canada receives complaints, it may open an investigation, and if it finds that a safety defect exists in a group of vehicles, it may request that NISSAN conduct a recall campaign. However, Transport Canada cannot become involved in individual problems between you, your dealer, or NISSAN.

You may contact Transport Canada's Defect Investigations and Recalls Division toll free at 1-800-333-0510. You may also report safety defects online at:

https://wwwapps.tc.gc.ca/Saf-Sec-Sur/7/PCDB-BDPP/fc-cp.aspx?lang=eng (English speakers) or

https://wwwapps.tc.gc.ca/Saf-Sec-Sur/7/PCDB-BDPP/fc-cp.aspx?lang=fra (French speakers).

Additional information concerning motor vehicle safety may be obtained from Transport Canada's Road Safety Information Centre at 1-800-333-0371 or online at www.tc.gc.ca/roadsafety (English speakers) or www.tc.gc.ca/securiteroutiere (French speakers).

To notify NISSAN of any safety concerns please contact our Consumer Information Centre toll free at 1-800-387-0122.

## READINESS FOR INSPECTION/ MAINTENANCE (I/M) TEST

Due to legal requirements in some states and Canadian Provinces, your vehicle may be required to be in what is called the "ready condition" for an Inspection/Maintenance (I/M) test of the emission control system.

The vehicle is set to the "ready condition" when it is driven through certain driving patterns. Usually, the "ready condition" can be obtained by ordinary usage of the vehicle.

If a powertrain system component is repaired or the battery is disconnected, the vehicle may be reset to a "not ready condition". Before taking the I/M test, check the vehicle's inspection/maintenance test readiness condition. Place the ignition switch in the ON position without starting the engine. If the Malfunction Indicator Light (MIL) comes on steady for 20 seconds and then blinks for 10 seconds, the I/M test condition is "not ready". If the MIL does not blink after 20 seconds, the I/M test condition is "ready".

It is recommended you visit a NISSAN dealer to set the "ready condition" or to prepare the vehicle for testing.

## EVENT DATA RECORDERS (EDR)

This vehicle is equipped with an Event Data Recorder (EDR). The main purpose of an EDR is to record, in certain crash or near crash-like situations, such as an air bag deployment or hitting a road obstacle, data that will assist in understanding how a vehicle's systems performed. The EDR is designed to record data related to vehicle dynamics and safety systems for a short period of time, typically 30 seconds or less. The EDR in this vehicle is designed to record such data as:

- How various systems in your vehicle were operating;
- Whether or not the driver and passenger safety belts were buckled/fastened;
- How far (if at all) the driver was depressing the accelerator and/or brake pedal; and,
- How fast the vehicle was traveling.
- Sounds are not recorded.

These data can help provide a better understanding of the circumstances in which crashes and injuries occur. NOTE: EDR data are recorded by your vehicle only if a nontrivial crash situation occurs; no data are recorded by the EDR under normal driving conditions and no personal data (e.g. name, gender, age and crash location) are recorded. However, other parties, such as law enforcement, could

combine the EDR data with the type of personally identifying data routinely acquired during a crash investigation.

To read data recorded by an EDR, special equipment is required and access to the vehicle or the EDR is needed. In addition to the vehicle manufacturer and NISSAN dealer, other parties, such as law enforcement, that have the special equipment, can read the information if they have access to the vehicle or the EDR.

## OWNER'S MANUAL/SERVICE MANUAL ORDER INFORMATION

Genuine NISSAN Service Manuals for this model year and prior can be purchased. A genuine NISSAN Service Manual is the best source of service and repair information for your vehicle. This manual is the same one used by the factory trained technicians working at a NISSAN dealer. Genuine NISSAN Owner's Manuals can also be purchased.

**For USA:**

For current pricing and availability of genuine **NISSAN Service Manuals**, contact:

www.nissan-techinfo.com

For current pricing and availability of genuine **NISSAN Owner's Manuals**, contact:

1-800-247-5321

**For Canada:**

To purchase a copy of a genuine NISSAN Service Manual or Owner's Manual for this model year and prior please contact your nearest NISSAN dealer. For the phone number and location of a NISSAN dealer in your area, call the NISSAN Information Center at 1-800-387-0122 and a bilingual NISSAN representative will assist you.

# 11 Index

## A


ABS (Anti-lock Braking System) ..... 5-28
Active noise cancellation ..... 5-35
Active sound enhancement ..... 5-35
Advanced air bag system ..... 1-36
Air bag system
- Advanced air bag system ..... 1-36
- Front passenger air bag and status light ..... 1-38
- Front-seat mounted side-impact supplemental air bag system ..... 1-41
- Roof-mounted curtain side-impact supplemental air bag system ..... 1-41

Air bag warning labels ..... 1-44
Air bag warning light ..... 1-44, 2-14
Air cleaner housing filter ..... 8-15
Air conditioner
- Air conditioner operation ..... 4-25
- Air conditioner service ..... 4-30
- Air conditioner specification label ..... 10-14
- Air conditioning system refrigerant and lubricant recommendations ..... 4-30, 10-8
- In-cabin microfilter ..... 4-30

Air deflectors ..... 10-18
Alarm, How to stop alarm (see vehicle security system) ..... 2-30
Alcohol, drugs and driving ..... 5-7
Antenna ..... 4-74
Anti-lock Braking System (ABS) ..... 5-28
Anti-lock braking system (ABS) warning light ..... 2-11
Appearance care
- Exterior appearance care ..... 7-2
- Interior appearance care ..... 7-5

Audible reminders ..... 2-18
Audio operation precautions ..... 4-30
Audio system ..... 4-30
- FM-AM radio with Compact Disc (CD) player ..... 4-43
- FM-AM-SAT radio with Compact Disc (CD) player ..... 4-52
- Steering wheel audio controls ..... 4-73

Autolight system ..... 2-35
Automatic
- Air conditioner (Type A) ..... 4-26
- Air conditioner (Type B) ..... 4-28
- Automatic adjusting function (front windows) ..... 2-49
- Automatic Transmission Fluid (ATF) ..... 8-8
- Door locks ..... 3-6
- Driving with automatic transmission ..... 5-12

Auxiliary input jacks ..... 4-70
Avoiding collision and rollover ..... 5-6


## B


Battery ..... 8-11
- Battery saver system ..... 2-36
- Intelligent Key ..... 8-20
- Variable voltage control system ..... 8-13

Before starting the engine ..... 5-11
Belts (See drive belts) ..... 8-14
Bluetooth® hands-free phone system (models with navigation system) ..... 4-76
Bluetooth® hands-free phone system (models without navigation system) ..... 4-86
Bluetooth® streaming audio ..... 4-63
Booster seats ..... 1-26
Brake
- Anti-lock Braking System (ABS) ..... 5-28
- Brake and clutch fluid ..... 8-9
- Brake fluid ..... 8-9
- Brake system ..... 5-27
- Parking brake operation ..... 5-21
- Warning light ..... 2-11

Break-in schedule ..... 5-24
Brightness control ..... 4-8
- Display ON/OFF button ..... 4-8
- Instrument panel ..... 2-37

Bulb replacement ..... 8-22


## C


Cabin air filter ..... 4-30
Capacities and recommended fluids/lubricants ..... 10-2
Car phone or CB radio ..... 4-75
Cargo cover ..... 2-45
Catalytic converter, Three way catalyst ..... 5-3
CD/DVD/USB memory care and cleaning ..... 4-72
Center multi-function control panel (models with navigation system) ..... 4-4
Chassis and body maintenance ..... 9-11
Child restraints ..... 1-19
- Booster seats ..... 1-26
- Precautions on child restraints ..... 1-19
- Top tether strap ..... 1-20

Child safety ..... 1-16
Chimes
- Audible reminders ..... 2-18
- Seat belt warning light and chime ..... 2-14

Circuit breaker, Fusible link ..... 8-18
Cleaning exterior and interior ..... 7-2, 7-5
Clock ..... 2-9, 2-27
Clutch fluid ..... 8-9
Cockpit ..... 2-3

Cold weather driving 5-33
Compact Disc (CD) player (See audio system) 4-54
Compact spare tire 8-36
Console box 2-44
Coolant
- Capacities and recommended fluids/lubricants 10-2
- Changing engine coolant 8-5
- Checking engine coolant level 8-5

Corrosion protection 7-8
Cover, Cargo cover 2-45
Cruise control 5-22
Cup holders 2-43

## D

Dampers, Performance dampers 5-32
Daytime running light system 2-36
Defroster switch, Rear window defroster switch 2-33
Dimensions 10-11
Drive belts 8-14
Driving
- Cold weather driving 5-33
- Driving with automatic transmission 5-12
- Driving with manual transmission 5-17
- Precautions when starting and driving 5-2

DVD player operation 4-55

## E

Economy, Fuel 5-25
Elapsed time 2-25
Emergency tire puncture repair kit 6-9
Emission control information label 10-13
Emission control system maintenance 9-8
Emission control system warranty 10-24
Engine
- Before starting the engine 5-11
- Break-in schedule 5-24
- Capacities and recommended fluids/lubricants 10-2
- Changing engine coolant 8-5
- Changing engine oil and filter 8-6
- Checking engine coolant level 8-5
- Checking engine oil level 8-6
- Coolant temperature gauge 2-7
- Emergency engine shut off 5-10
- Engine block heater 5-34
- Engine compartment check locations 8-3
- Engine cooling system 8-4
- Engine oil 8-6
- Engine oil and oil filter recommendation 10-7
- Engine oil replacement indicator 2-23
- Engine oil temperature gauge 2-8
- Engine oil viscosity 10-7
- Engine serial number 10-13
- Engine specifications 10-9
- Engine start operation indicator 2-19
- Engine start operation indicator (Manual Transmission models) 2-20
- If your vehicle overheats 6-17
- Starting the engine 5-11

Event Data Recorders (EDR) 10-25
Exhaust gas (carbon monoxide) 5-2
Explanation of scheduled maintenance items 9-5
Extended storage fuse warning 2-22
Exterior light indicator 2-15

## F

F.M.V.S.S./C.M.V.S.S. certification label 10-13
Filter
- Air cleaner housing filter 8-15
- Changing engine oil and filter 8-6

Flashers (See hazard warning flasher switch) 6-2
Flat tire 6-3
- Repairing flat tire (with emergency tire puncture repair kit) 6-9

Flat towing 10-22
Floor mat cleaning 7-6
Floor mat installation 7-7
Fluid
- Automatic Transmission Fluid (ATF) 8-8
- Brake and clutch fluid 8-9
- Brake fluid 8-9
- Capacities and recommended fluids/lubricants 10-2
- Engine coolant 8-4
- Engine oil 8-6
- Power steering fluid 8-8
- Window washer fluid 8-10

FM-AM radio with Compact Disc (CD) player 4-43
FM-AM-SAT radio with Compact Disc (CD) player 4-52
Fog light switch 2-38
Front manual seat adjustment 1-4
Front passenger air bag and status light 1-38
Front power seat adjustment 1-3
Front seat, Front seat adjustment 1-3
Front-seat active head restraints 1-9
Fuel
- Capacities and recommended fluids/lubricants 10-2

Fuel economy 5-25
Fuel economy information (display) 4-9
Fuel information 10-4
Fuel octane rating 10-4
Fuel-filler cap 3-35
Fuel-filler door 3-35
Gauge 2-8
LOOSE FUEL CAP warning 3-37
Fuel efficient driving tips 5-24
Fuses 8-18
Fusible links 8-18

## G

Garage door opener, HomeLink® Universal Transceiver 2-52
Gas cap 3-35
Gauge 2-5
Engine coolant temperature gauge 2-7
Fuel gauge 2-8
Odometer 2-6
Speedometer 2-6
Tachometer 2-7
Trip computer 2-23
General maintenance 9-2
Glove box 2-44

## H

Hands-free phone system, Bluetooth® (models with navigation system) 4-76
Hands-free phone system, Bluetooth® (models without navigation system) 4-86
Hatch, Rear hatch 3-18
Hazard warning flasher switch 6-2
Head restraints/headrests 1-6
Headlights
Bulb replacement 8-23
Headlight switch 2-34
Xenon headlights 2-34
Heated seats 2-38
Heater
Engine block heater 5-34
Heater and air conditioner operation 4-25
HomeLink® Universal Transceiver 2-52
Hood release 3-17
Horn 2-38

## I

Ignition switch (Push-button) 5-8
Manual transmission models 5-17
Immobilizer system 2-30
In-cabin microfilter 4-30
Indicator lights 2-15
INFO button 4-8
Inside mirror 3-39
Inspection/maintenance (I/M) test 10-25
Instrument brightness control 2-37
Instrument panel 2-4
Instrument pocket 2-43
Intelligent Key 3-3
Intelligent Key battery discharge indicator 2-20
Intelligent Key removal indicator 2-20
Intelligent Key system 3-7
Battery replacement 8-20
Intelligent Key system warning light 2-12
Key operating range 3-9
Key operation 3-10
Warning signals 3-12
Interior light control switch 2-50
Interior light replacement 8-24
Interior lights 2-50
Interior trunk lid release 3-21
iPod® player operation 4-68

## J

Jump starting 6-15

## K

Keyless entry (See remote keyless entry system) 3-14
Keys 3-3
For Intelligent Key system 3-7

## L

Labels
Air bag warning labels 1-44
Air conditioner specification label 10-14
Emission control information label 10-13
Engine serial number 10-13
F.M.V.S.S./C.M.V.S.S. certification label 10-13
Tire and Loading information label 8-27, 10-14
Vehicle identification number (VIN) 10-12
License plate, Installing front license plate 10-15
Light
Air bag warning light 1-44
Bulb replacement 8-22
Cargo area courtesy light 2-51
Cargo light 2-52
Fog light switch 2-38
Headlight switch 2-34

Headlights bulb replacement 8-23
Indicator lights 2-15
Interior light control switch 2-50
Interior lights 2-50
Map lights 2-50
Replacement 8-22
Trunk light 2-52
Vanity mirror lights 2-51
Warning lights, indicator lights and audible reminders 2-11
Xenon headlights 2-34
Lights check/instrument panel 2-11
Lights, Exterior and interior light replacement 8-24
Loading information (See vehicle loading information) 10-19
Lock
Automatic door locks 3-6
Door locks 3-5
Power door lock 3-5
Rear hatch lock 3-18
Trunk lid 3-20
Locking with mechanical key 3-5
Low tire pressure warning light 2-13
Low tire pressure warning system (See Tire Pressure Monitoring System (TPMS)) 5-3

## M

Maintenance
Battery 8-11
General maintenance 9-2
Inside the vehicle 9-3
Maintenance indicators 2-23
Maintenance log 9-14
Maintenance precautions 8-2
Maintenance requirement 9-2
Maintenance schedules 9-6
Maintenance under severe driving conditions 9-13
Outside the vehicle 9-2
Seat belt maintenance 1-15
Standard maintenance 9-7
Maintenance schedules 9-6
Malfunction indicator light (MIL) 2-16
Manual front seat adjustment 1-4
Map lights 2-50
Master warning light 2-14
Mechanical key (Intelligent Key system) 3-4
Meter
Trip computer 2-23
Meters and gauges 2-5
Instrument brightness control 2-37
Mirror
Inside mirror 3-39
Outside mirrors 3-40
Vanity mirror 3-41
Multi-function controller 4-4

## N

New vehicle break-in 5-24
NISSAN Vehicle Immobilizer System 2-30
NISSAN voice recognition system 4-99
No key warning 2-20

## O

Odometer 2-6
Off-road recovery 5-6
Oil
Capacities and recommended fluids/lubricants 10-2
Changing engine oil and filter 8-6
Checking engine oil level 8-6
Engine oil 8-6
Engine oil viscosity 10-7
Oil filter replacement indicator 2-23
Opening the soft top 3-23
Operation, Operational indicators 2-19
Outside mirrors 3-40
Overheat, If your vehicle overheats 6-17
Owner's Manual/Service Manual order information 10-26

## P

Panic alarm 3-15
Parking
Brake break-in 5-28
Parking brake operation 5-21
Parking on hills 5-26
Performance dampers 5-32
Phone
Bluetooth® hands-free phone system (models with navigation system) 4-76
Bluetooth® hands-free phone system (models without navigation system) 4-86
Car phone or CB radio 4-75
Power
Front seat adjustment 1-3
Power door lock 3-5
Power outlet 2-42
Power steering 5-27
Power steering fluid 8-8
Power windows 2-46
Precautions 5-22
Audio operation 4-30
Braking precautions 5-27
Child restraints 1-19
Cruise control operations 5-18

Maintenance 8-2
Seat belt usage 1-10
Supplemental restraint system 1-30
When starting and driving 5-2
Predictive course line settings 4-22
Push starting 6-17
Push warning (Automatic Transmission models) 2-20
Push-button ignition switch 5-8, 5-9

## R

Radio 4-30
Car phone or CB radio 4-75
Rapid air pressure loss 5-6
Readiness for inspection/maintenance (I/M) test 10-25
Rear hatch 3-18
Rear hatch opener 3-18
Rear hatch opener switch 3-18
Rear hatch release switch 3-19
Rear parcel box 2-45
Rear window defroster switch 2-33
RearView Monitor (models with navigation system) 4-17
Recorders, Event data 10-25
Registering your vehicle in another country 10-12
Remote keyless entry system 3-14
Repairing flat tire (with emergency tire puncture repair kit) 6-9
Reporting safety defects 10-24
Roadside assistance program 6-2
Rollover 5-6
Roof, Soft top 3-23

## S

Safety, Child seat belts 1-16
Satellite radio operation 4-53
Seat adjustment
Front manual seat adjustment 1-4
Front power seat adjustment 1-3
Front seats 1-3
Seat belt(s)
Child safety 1-16
Infants 1-16
Injured persons 1-12
Larger children 1-17
Precautions on seat belt usage 1-10
Pregnant women 1-12
Seat belt cleaning 7-7
Seat belt extenders 1-15
Seat belt maintenance 1-15
Seat belt warning light and chime 2-14
Seat belts 1-10
Seat belts with pretensioners 1-43
Three-point type 1-12
Seat(s)
Climate controlled seats 2-40
Heated seats 2-38
Seats 1-2
Secondary rear hatch release 3-20
Secondary trunk lid release 3-22
Security system (NISSAN Vehicle Immobilizer System), Engine start 2-30
Security system, Vehicle security system 2-29
Servicing air conditioner 4-30
SETTING button 4-11
Shift lever, Shift lock release 5-17
Shift lock release, Transmission 5-17
Shift “P” warning (Automatic Transmission models) 2-20
Shifting
Automatic transmission 5-12
Manual transmission 5-17
Soft top
Care and cleaning 7-3
If the top does not open or close 3-30
Opening using the Intelligent Key 3-28
Soft top indicator light 2-17, 3-26
Soft top operation 3-23
Spare tire 10-10
Spark plugs 8-14
Speedometer 2-6
Standard maintenance 9-7
Starting
Before starting the engine 5-11
Jump starting 6-15
Precautions when starting and driving 5-2
Push starting 6-17
Starting the engine 5-11
STATUS button 4-8
Status light, Front passenger air bag 1-38
Steering
Power steering 5-27
Power steering fluid 8-8
Steering-wheel-mounted controls for audio 4-73
Storage 2-43
Sun visors 3-38
Supplemental air bag warning labels 1-44
Supplemental air bag warning light 1-44, 2-14
Supplemental restraint system 1-30
Precautions on supplemental restraint system 1-30

Switch
Autolight switch 2-35
Fog light switch 2-38
Hazard warning flasher switch 6-2
Headlight switch 2-34
Ignition switch 5-12
Ignition switch manual transmission models 5-17
Power door lock switch 3-6
Rear hatch release switch 3-19
Rear window defroster switch 2-33
Turn signal switch 2-37
Vehicle dynamic control (VDC) off switch 2-41
SynchroRev Match mode (S-MODE) 5-18

## T

Tachometer 2-7
Temperature gauge, Engine coolant temperature gauge 2-7
Theft (NISSAN Vehicle Immobilizer System), Engine start 2-30
Three-way catalyst 5-3
Tilt steering 3-38
Tire
Pressure, Low tire pressure warning light 2-13
Sealant 6-9
Tire replacement indicator 2-23
Tires
Emergency tire puncture repair kit 6-9
Flat tire 6-3
Low tire pressure warning system 5-3
Spare tire 8-36
Tire and Loading information label 8-27, 10-14
Tire chains 8-33
Tire dressing 7-5
Tire pressure 8-26
Tire Pressure Monitoring System (TPMS) 5-3, 6-3
Tire rotation 8-33
Types of tires 8-32
Uniform tire quality grading 10-23
Wheel/tire size 10-10
Wheels and tires 8-26
Tonneau cover (see cargo cover) 2-45
Top, Soft top 3-23
Touch screen 4-5
Towing
Flat towing 10-22
Tow truck towing 6-19
Towing a trailer 10-22
TPMS, Tire Pressure Monitoring System 5-3, 6-3
Trailer towing 10-22
Transceiver, HomeLink® Universal Transceiver 2-52
Transmission
Automatic Transmission Fluid (ATF) 8-8
Driving with automatic transmission 5-12
Driving with manual transmission 5-17
Transmission shift lever lock release 5-17
Transmitter (See remote keyless entry system) 3-14
Traveling or registering your vehicle in another country 10-12
Trip computer 2-23
Trip odometer 2-25
Triple meter 2-8
Trunk
Interior trunk lid release 3-21
Light 2-52
Secondary trunk lid release 3-22
Trunk lid 3-20
Trunk release power cancel switch 3-21
Turn signal switch 2-37

## U

Underbody cleaning 7-4
Uniform tire quality grading 10-23
USB (Universal Serial Bus) connection port 4-47, 4-59

## V

Vanity mirror 3-41
Vanity mirror lights 2-51
Variable voltage control system 8-13
Vehicle
Dimensions 10-11
Identification number (VIN) 10-12
Information and settings (models with navigation system) 4-8
Information display 2-19
Loading information 10-19
Recovery (freeing a stuck vehicle) 6-22
Security system 2-29
Vehicle dynamic control (VDC) off switch 2-41
Vehicle dynamic control (VDC) system 5-30
Ventilators 4-24
Voice command (Bluetooth® Hands-Free Phone System) 4-92
Voice command (NISSAN voice recognition system) 4-105
Voltmeter 2-9

## W


Warning
- Hazard warning flasher switch ..... 6-2
- Lights ..... 2-11
- Tire Pressure Monitoring System (TPMS) ..... 5-3, 6-3
- Warning lights, indicator lights and audible reminders ..... 2-10

Warning labels, Air bag warning labels ..... 1-44
Warning light
- Air bag warning light ..... 1-44, 2-14
- Anti-lock braking system (ABS) warning light ..... 2-11
- Brake warning light ..... 2-11
- Intelligent Key system warning light ..... 2-12
- Low tire pressure warning light ..... 2-13
- Seat belt warning light and chime ..... 2-14

Warnings and alerts (vehicle information display) ..... 2-21
Warranty, Emission control system warranty ..... 10-24
Washer switch, Wiper and washer switch ..... 2-32
Washing ..... 7-2
Waxing ..... 7-4
Wheel/tire size ..... 10-10
Wheels and tires ..... 8-26
- Care of wheels ..... 7-4
- Cleaning aluminum alloy wheels ..... 7-5

Window washer fluid ..... 8-10
Window(s)
- Automatic adjusting function ..... 2-49
- Cleaning ..... 7-4
- Power windows ..... 2-46

Wiper
- Wiper and washer switch ..... 2-32
- Wiper blades ..... 8-16

Wiper and washer switch ..... 2-32


## X


Xenon headlights ..... 2-34

## FUEL INFORMATION:

### VQ37VHR engine

Use unleaded premium gasoline with an octane rating of at least 91 AKI (Anti-Knock Index) number (Research octane number 96).

If unleaded premium gasoline is not available, unleaded regular gasoline with an octane rating of at least 87 AKI number (Research octane number 91) may be temporarily used, but only under the following precautions:

- Have the fuel tank filled only partially with unleaded regular gasoline, and fill up with unleaded premium gasoline as soon as possible.
- Avoid full throttle driving and abrupt acceleration.

**Use unleaded premium gasoline for maximum vehicle performance.**

**CAUTION**

- **Using a fuel other than that specified could adversely affect the emission control systems, and may also affect warranty coverage.**
- **Under no circumstances should a leaded gasoline be used, since this will damage the three way catalyst.**
- **Do not use a fuel containing more than 15% ethanol in your vehicle. Your vehicle is not designed to run on a fuel containing more than 15% ethanol. Using a fuel containing more than 15% ethanol in a vehicle not specifically designed for a fuel containing more than 15% ethanol can adversely affect the emission control devices and systems of the vehicle. Damage caused by such fuel is not covered by the NISSAN new vehicle limited warranty.**
- **U.S. government regulations require ethanol dispensing pumps to be identified by a small, square, orange and black label with the common abbreviation or the appropriate percentage for that region.**

For additional information, see “Capacities and recommended fluids/lubricants” (P.10-2).

## ENGINE OIL RECOMMENDATION:

Genuine “NISSAN Motor Oil Ester 5W-30 SN”

See “Capacities and recommended fluids/lubricants” (P.10-2) for engine oil and oil filter recommendation.

## COLD TIRE PRESSURES:

The label is typically located on the driver side center pillar or on the driver’s door. For additional information, see “Wheels and tires” (P.8-26).

## NEW VEHICLE BREAK-IN PROCEDURES RECOMMENDATION:

During the first 1,200 miles (2,000 km) of vehicle use, follow the recommendations outlined in the “Break-in schedule” (P.5-24) of this Owner’s Manual. Follow these recommendations for the future reliability and economy of your new vehicle.

Printing : February 2017
Publication No.: OM18E0 0Z34U0
Printed in U.S.A.
T00UM-1TG7D

Z34-D