Self Study Programme 481

Audi A7 Sportback

Onboard power supply and networking

Audi
Service Training

Four-zone air conditioning, head-up display, Bang & Olufsen Advanced Sound System, navigation, WLAN hotspot, massage seats, LED headlights, night vision assist, Audi pre sense, Keyless Go, Audi drive select, start-stop system, Audi active lane assist, reversing camera — all these and other convenience features and safety functions would not be possible without the use of increasingly efficient electronics.
Prerequisites for perfect functioning of these electronics are a stable and reliable onboard power supply as well networking of the control units via their bus systems to facilitate high-speed data exchange between miscellaneous complex systems.

To achieve all this, the Audi A7 Sportback comes equipped with:

- Main battery lead made of aluminium
- Alternator with recuperation function
- Voltage stabiliser for start-stop system
- FlexRay bus system
- LED headlights

This Self Study Programme provides you with a fast and efficient in-depth guide to the electronics of the Audi A7 Sportback.

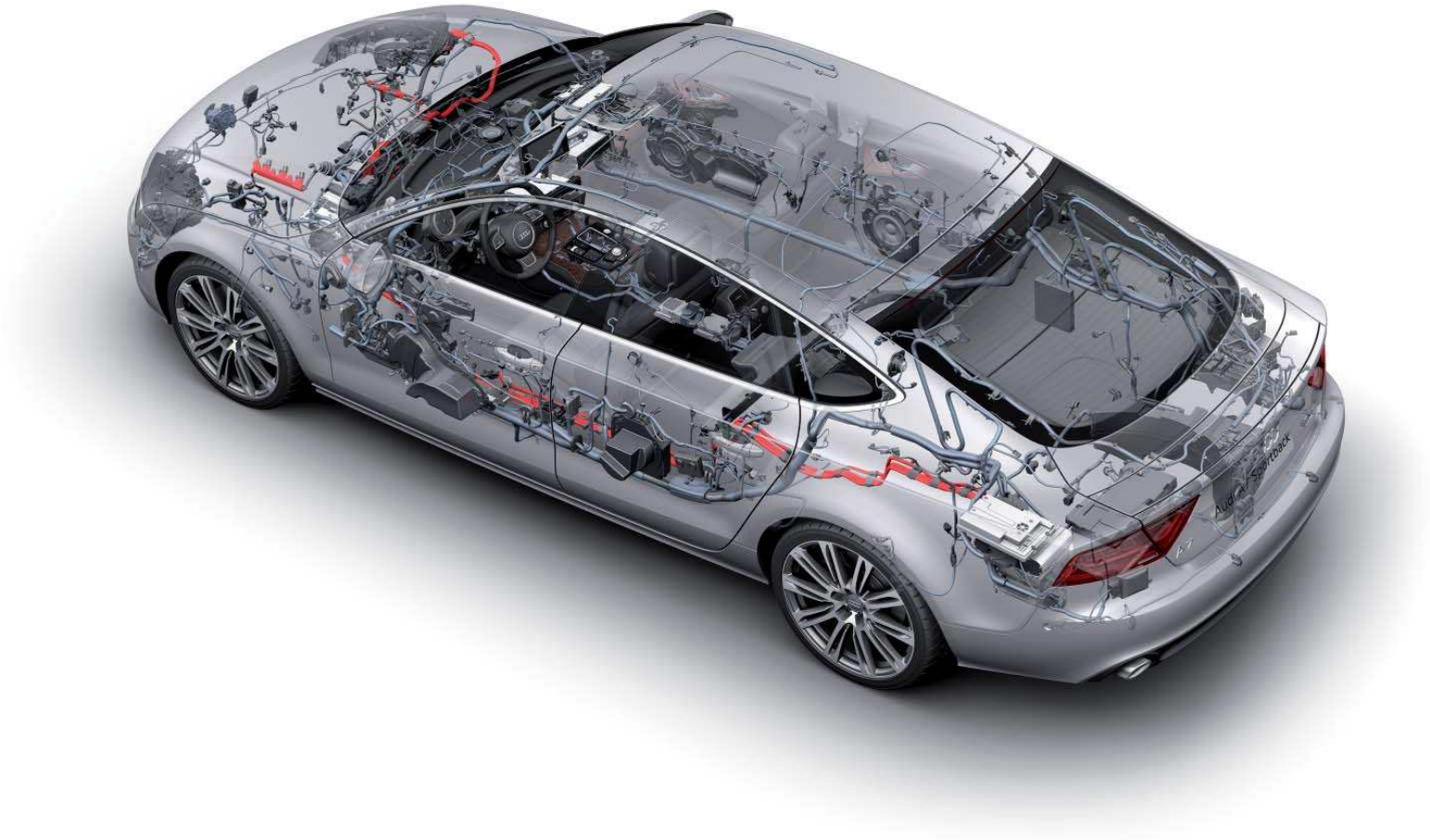

481_050

Learning objectives of this Self Study Programme are:

When you have worked your way through this Self Study Programme, you will be able to answer the following questions:

- Where are the fuse carriers installed on the Audi A7 Sportback and how are they supplied with power?
- Where are electrical components fitted on the vehicle?
- Which bus systems are used on the Audi A7 Sportback?
- Which functions are performed by the onboard power supply control unit J519?
- Where are the CAN isolating connectors located and which bus systems are connected to them?
- What are the new features of the FlexRay bus system?
- What are the new features of the exterior lighting?
- What does ESD protection mean and what relevance does it have to the repair of electronic components?

Contents

Power supply

Jump start terminals 5
Battery 5
Main battery lead 5
Supply structure 6
Fuses and relays 7

Networking

Installation locations of the control units 8
Topology 10
New features of the bus system 12
CAN isolating connector 13
CAN adaptor V.A.G 1598/38 13
FlexRay 14

Control units

Data bus diagnostic interface J533 16
Battery monitor control unit J367 17
Alternator C 18
Voltage stabiliser J532 19
Onboard power supply control unit J519 20

Exterior lighting

Light switch 22
headlights 24
Side marker lights 34
Tail lights 34

Service

Electronic repairs with ESD protection 38
Self Study Programmes 39

▸ The Self Study Programme explains the basics of the design and function of new models, new automotive components or new technologies.
It is not a Repair Manual! Figures given are for explanatory purposes only and refer to the data valid at the time of preparation of the SSP.
For further information about maintenance and repair work, always refer to the current technical literature.

Note

Reference

Power supply

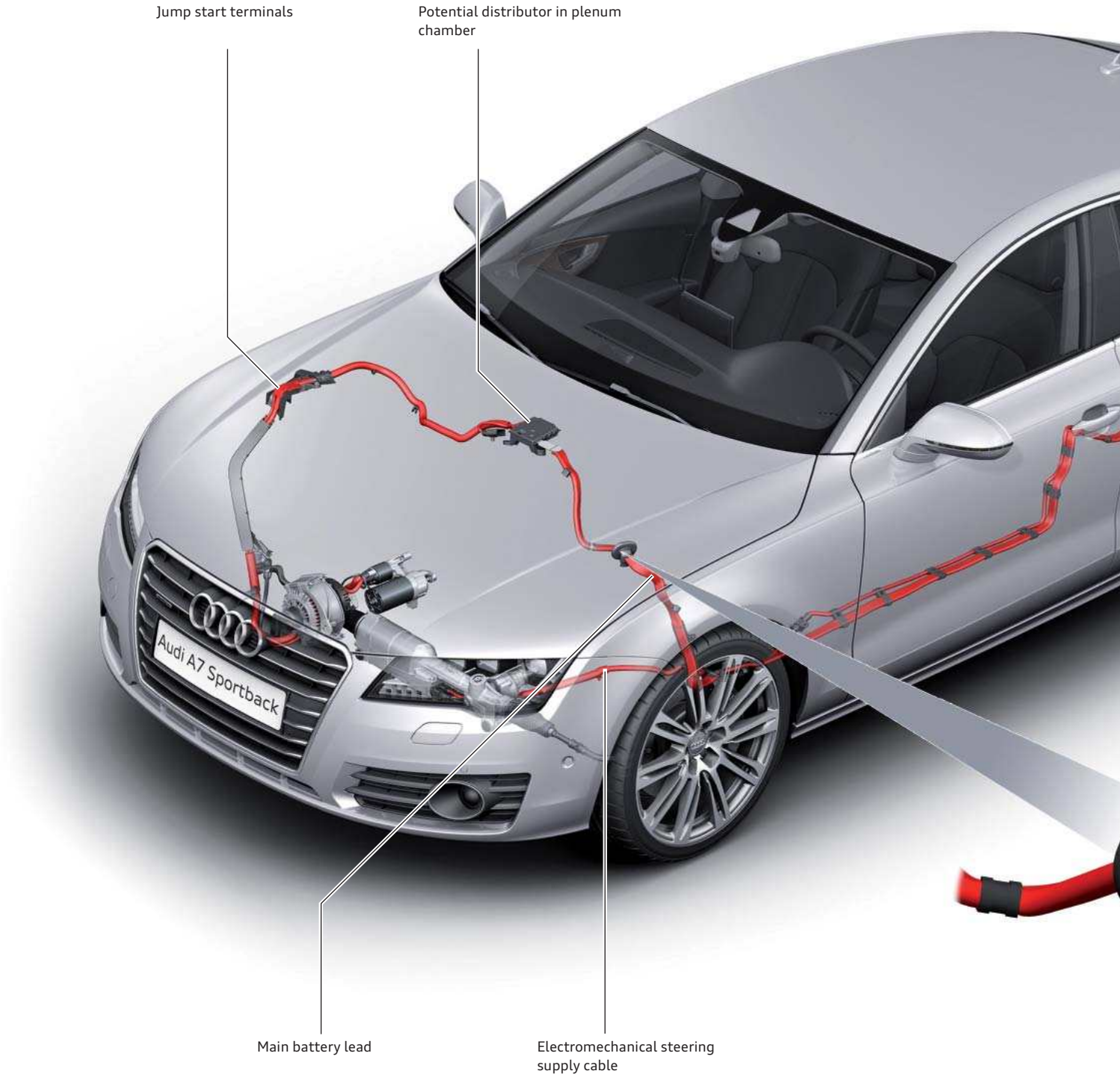

Jump start terminals

The jump start terminals are located in the engine bay on the right. The positive terminal is connected to the main battery lead via potential distributors in the plenum chamber and supplies the alternator and starter with electrical power. The ground terminal is located on the wing inner panel.

Battery

The battery in the Audi A7 Sportback is housed centrally in the spare wheel well. The main fuse carrier and the battery isolator are connected to the battery's positive terminal. The battery monitor control unit J367 is located at the negative terminal. This control unit forms a physical unit with the grounding cable connected to the grounding point in the spare wheel well. An AGM battery[1)] is fitted on all models with a start-stop system and/or an auxiliary heater.

The following batteries are used on the Audi A7 Sportback:

Standard batteries	AGM batteries
▸ 80 Ah/380 A ▸ 110 Ah/520 A	▸ 68 Ah/380 A ▸ 75 Ah/420 A ▸ 92 Ah/520 A ▸ 105 Ah/580 A

Main battery lead

The main battery lead on the Audi A7 Sportback is designed as a flexible aluminium ribbon cable and connected to the battery's positive terminal via the battery isolator.

It is routed out of the spare wheel well together with the supply lead (round aluminium cable) for the electromechanical steering through a rubber grommet and then runs along the underbody on the left-hand side of the vehicle.

The two cables are separated in the front left wheel well and the ribbon cable is routed to the potential distributor through a further rubber grommet in the plenum chamber.
The round cable is routed directly to the electromechanical steering in the engine bay.

[1)] English: **A**bsorbant **G**lass **M**at

Supply structure

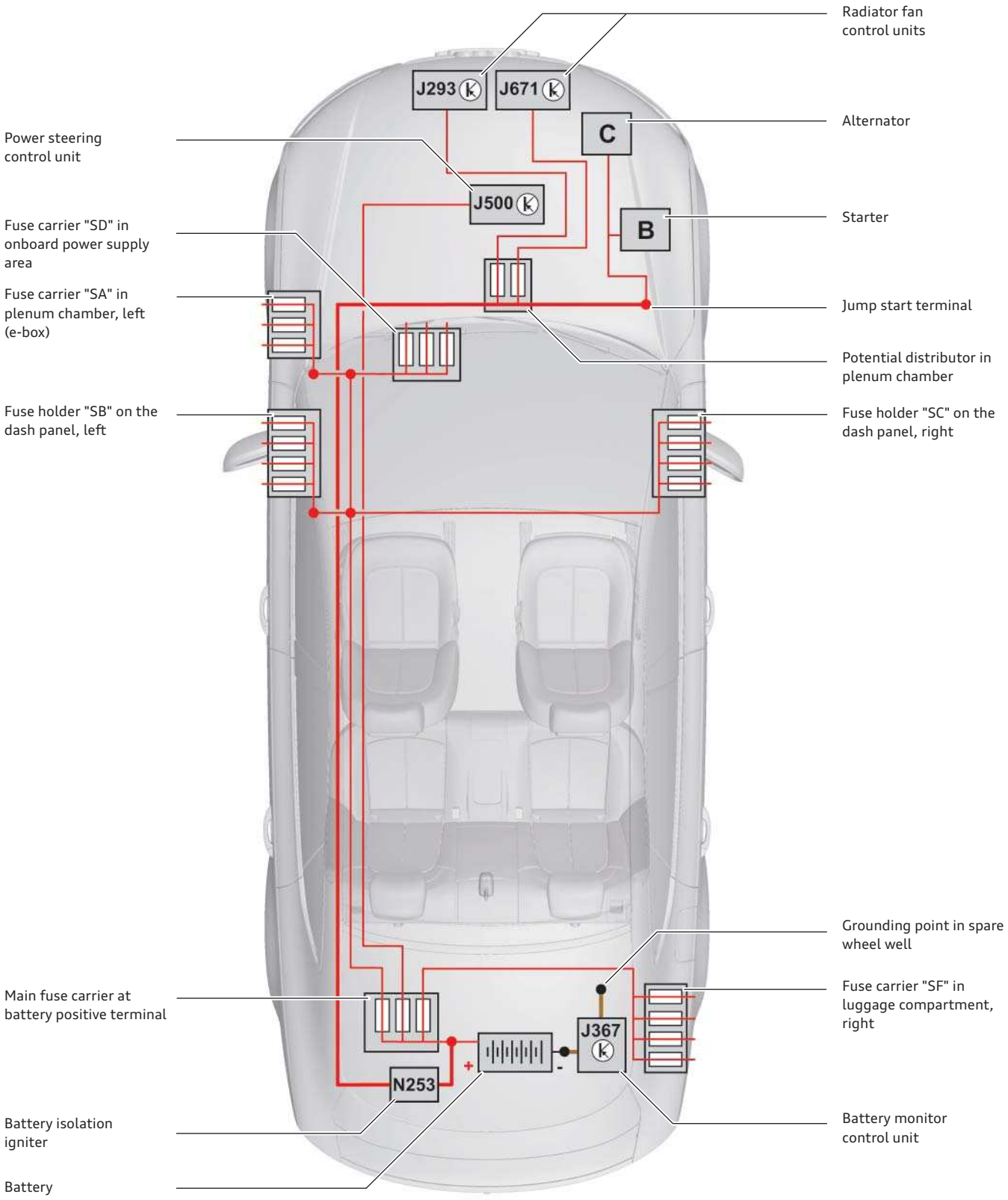

481_018

This diagram summarises the supply structure of the Audi A7 Sportback. This is a schematic diagram. Refer to the valid service literature for the exact fuse assignments and cable routing.

Fuses and relays

Potential distributor in plenum chamber
The radiator fan control units are supplied with power via the fuses fitted at this point. The main battery lead junction is also located here.

Fuse and relay carrier on the dash panel, right
The fuses are labelled "SC" in the current flow diagram. They can be accessed by the customer after removing the dash panel cover.

Fuse and relay carrier and CAN node connector in luggage compartment, right
The fuses are labelled "SF" in the current flow diagram.
The fuses can be accessed by the customer after removing the storage compartment in the luggage compartment at the rear left.

Main fuse carrier at battery positive terminal
The battery isolator is also mounted on this fuse carrier.

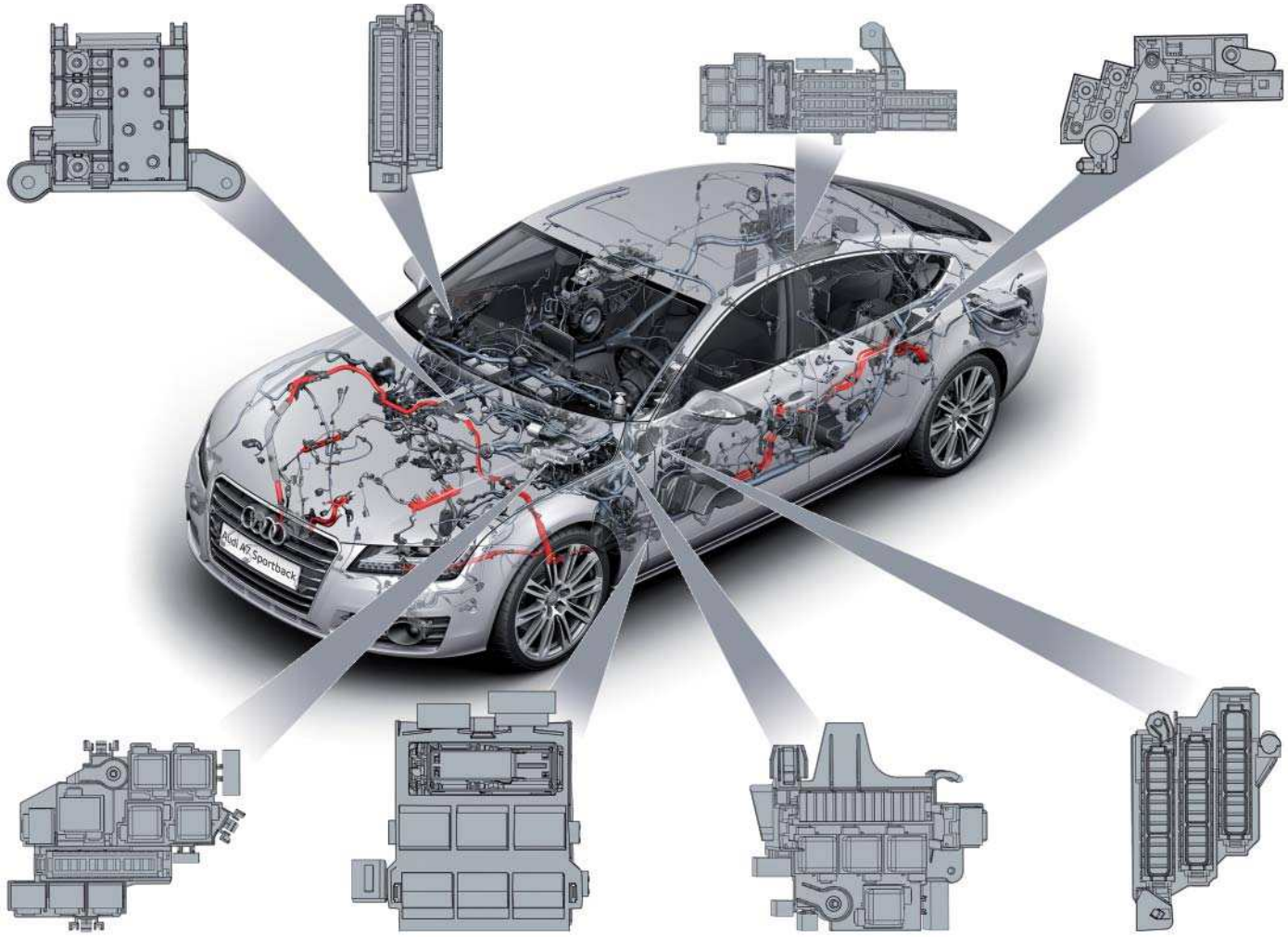

Fuse and relay carrier in the "e-box" in the plenum chamber, driver side
(under the windscreen washer system reservoir)
The e-box lid also serves as a support for the engine control unit. The fuses in the e-box are labelled "SA" in the current flow diagram.

Coupling station and CAN node connector at the A post, bottom left.

Fuse and relay carrier in the onboard power supply control unit area
(below the dash panel in the driver footwell)
The fuses are labelled "SD" in the current flow diagram.

Fuse and relay carrier on the dash panel, left
The fuses are labelled "SB" in the current flow diagram.
They can be accessed by the customer after removing the dash panel cover.

481_008

Networking

Installation locations of the control units

Some of the control units shown in the overview are optional and/ or country-specific equipment.

Refer to the current service literature for details of controls unit positions, as well as instructions for installation and removal.

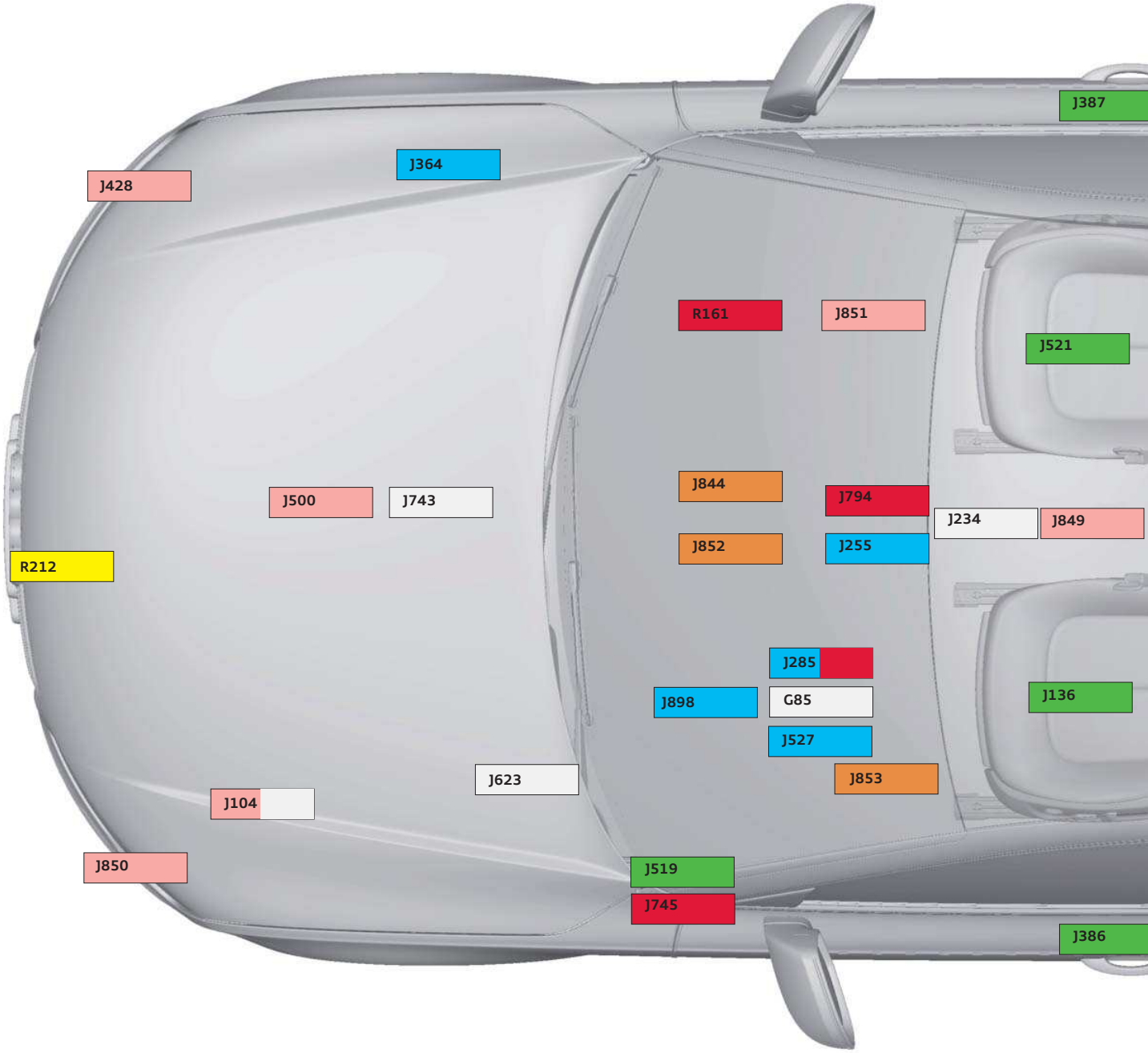

Legend:

Control units on the convenience CAN bus

J136 Seat and steering column adjustment control unit with memory
J345 Trailer detector control unit
J386 Door control unit, driver side
J387 Door control unit, front passenger side
J393 Convenience system central control unit
J519 Onboard power supply control unit
J521 Seat adjustment control unit with memory
J605 Rear lid control unit
J608 Special vehicle control unit
J843 Vehicle tracking system interface control unit
J872 Multi-contour seat control unit, front passenger side
J873 Multi-contour seat control unit, driver side

CAN display and operation control units

E265 Rear air conditioner/Climatronic operating and display unit
J255 Climatronic control unit
J285 Control unit in dash panel insert
J364 Additional heater control unit
J527 Steering column electronics control unit
J772 Reversing camera system control unit
J791 Audi parking system control unit
J898 Windscreen projection system control unit

Control units on the powertrain CAN bus

G85 Steering angle sender
J234 Airbag control unit
J540 Electromechanical park and handbrake control unit
J623 Engine control unit
J743 Twin clutch gearbox mechatronics

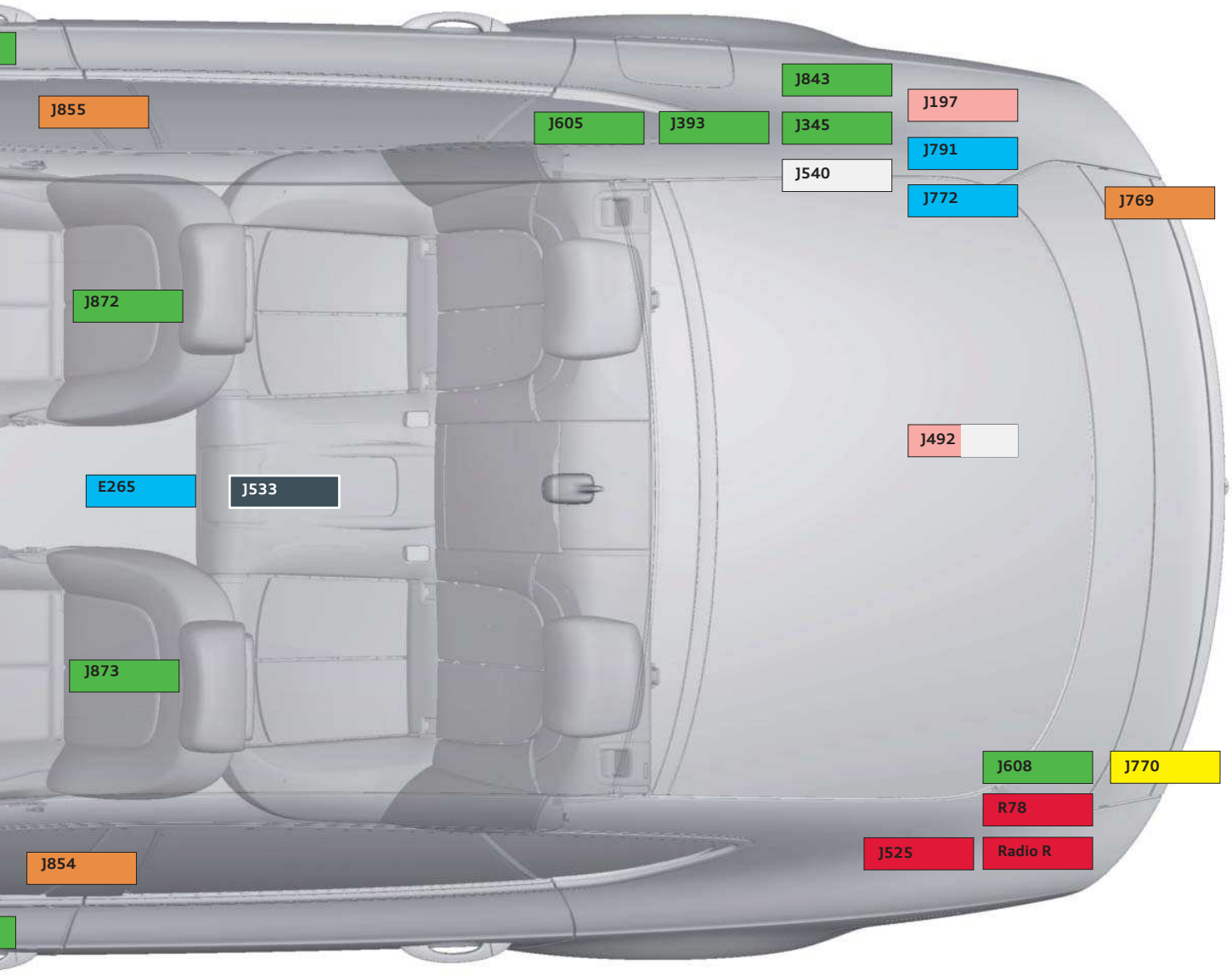

481_009

Control units on the extended CAN bus
J745 Cornering light and headlight range control unit
J769 Audi lane assist control unit
J844 Headlight assist control unit
J852 Camera control unit
J853 Night vision system control unit
J854 Front left belt pretensioner control unit
J855 Front right belt pretensioner control unit

Control units on the MOST bus
J285 Control unit in dash panel insert
J525 Digital sound package control unit
J794 Information electronics control unit 1
R Radio
R78 TV tuner
R161 DVD auto changer

Control units on the FlexRay bus
J104 ABS control unit
J197 Adaptive suspension control unit
J428 ACC control unit
J492 Four-wheel drive control unit
J500 Power steering control unit
J849 Sensor electronics control unit
J850 ACC control unit 2
J851 Image processing control unit

Sub-bus users
R212 Night vision system camera
J770 Audi lane assist control unit 2

Users of all bus systems (gateway)
J533 Data bus diagnostic interface

Topology

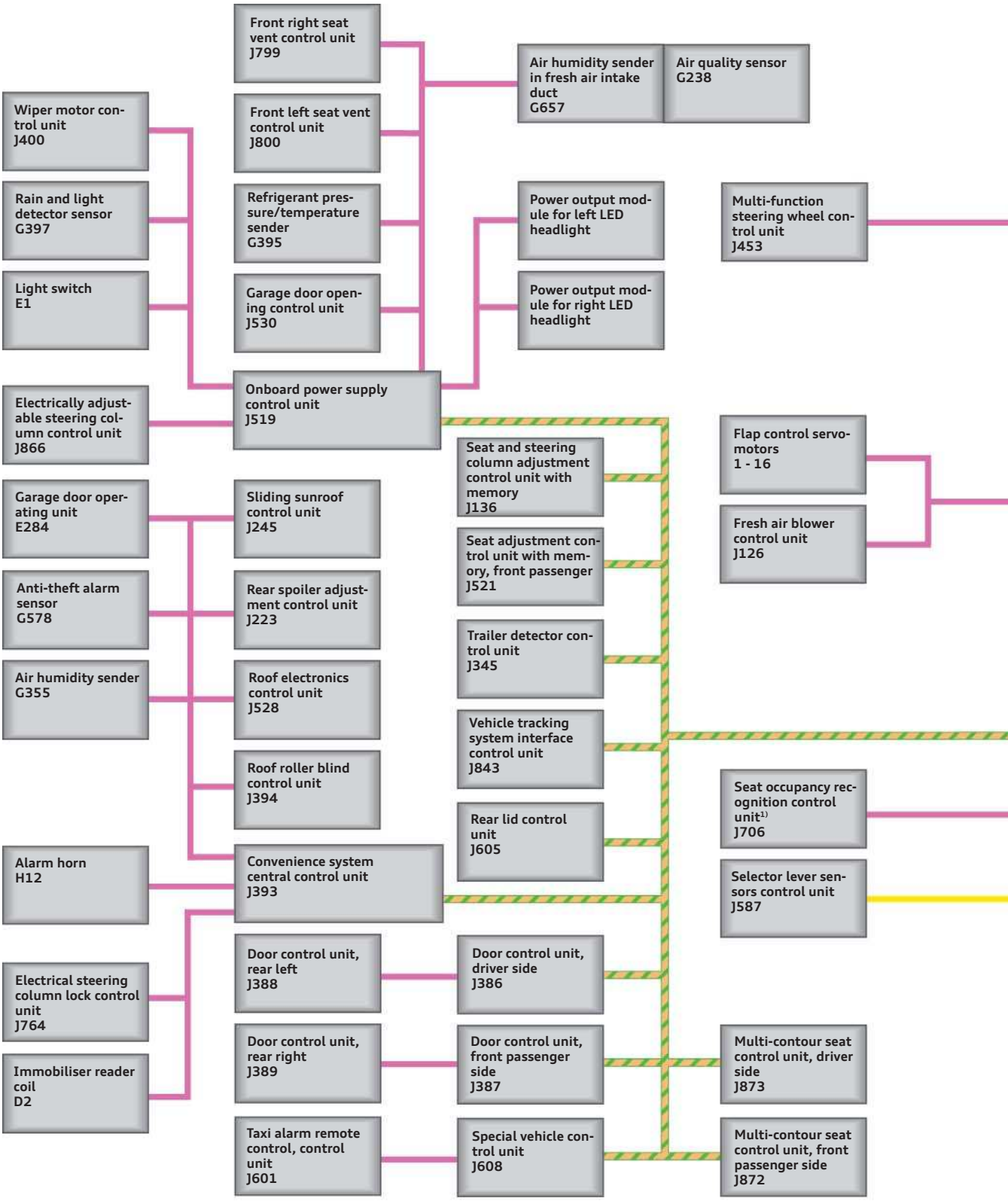

Legend:

- Powertrain CAN bus
- Convenience CAN bus
- Extended CAN bus
- Display and operation CAN bus
- Diagnostics CAN bus
- FlexRay
- MOST bus
- LIN bus
- Sub-bus systems

The diagram shows the topology of a model version with an extensive equipment specification.

Some of the control units shown here are optional and/or country-specific equipment.

[1] specific markets only

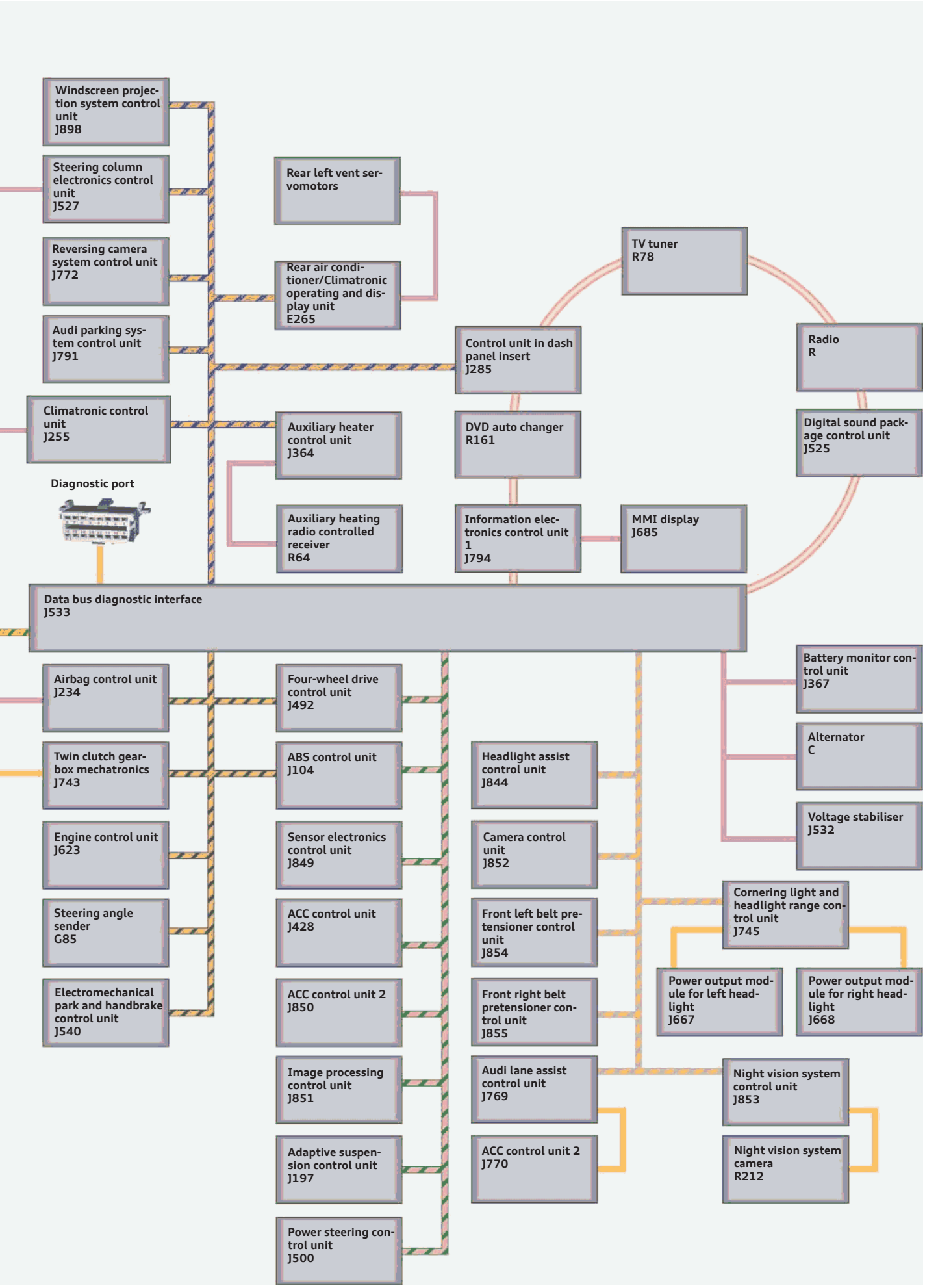
Windscreen projection system control unit J898
Steering column electronics control unit J527
Reversing camera system control unit J772
Audi parking system control unit J791
Climatronic control unit J255
Diagnostic port
Rear left vent servomotors
Rear air conditioner/Climatronic operating and display unit E265
TV tuner R78
Control unit in dash panel insert J285
Radio R
Auxiliary heater control unit J364
DVD auto changer R161
Digital sound package control unit J525
Auxiliary heating radio controlled receiver R64
Information electronics control unit 1 J794
MMI display J685
Data bus diagnostic interface J533
Airbag control unit J234
Twin clutch gearbox mechatronics J743
Engine control unit J623
Steering angle sender G85
Electromechanical park and handbrake control unit J540
Four-wheel drive control unit J492
ABS control unit J104
Sensor electronics control unit J849
ACC control unit J428
ACC control unit 2 J850
Image processing control unit J851
Adaptive suspension control unit J197
Power steering control unit J500
Headlight assist control unit J844
Camera control unit J852
Front left belt pretensioner control unit J854
Front right belt pretensioner control unit J855
Audi lane assist control unit J769
ACC control unit 2 J770
Battery monitor control unit J367
Alternator C
Voltage stabiliser J532
Cornering light and headlight range control unit J745
Power output module for left headlight J667
Power output module for right headlight J668
Night vision system control unit J853
Night vision system camera R212

481_001

New features of the bus system

If you compare the Audi A7 Sportback to the Audi A6 ’05, you will see that the number of control units involved in bus communications has increased from 49 to over 90.
The number of bus systems has increased from 6 to 7.

Bus systems used on the Audi A7 Sportback:

Bus system	Cable colour	Configuration	Data transfer	Characteristic
Powertrain CAN bus		Electrical two-wire bus system	500 kbit/s	Not single-wire capable
Convenience CAN bus		Electrical two-wire bus system	500 kbit/s	Not single-wire capable
Extended CAN bus		Electrical two-wire bus system	500 kbit/s	Not single-wire capable
Display and operation CAN bus		Electrical two-wire bus system	500 kbit/s	Not single-wire capable
Diagnostics CAN bus		Electrical two-wire bus system	500 kbit/s	Not single-wire capable
FlexRay		Electrical two-wire bus system	10 Mbit/s	Not single-wire capable
MOST bus		Optical bus system	22.5 Mbit/s	Ring structure Open circuit results in failure of the whole system
LIN bus		Electrical single-wire bus system	20 kbit/s	Single-wire capable
Sub-bus system		Electrical two-wire bus system	500 kbit/s	Not single-wire capable

The main new features at a glance:

- The convenience CAN bus on the Audi A7 Sportback is a high-speed bus system
- New FlexRay bus system
- Dash panel insert control unit J285 uses two bus systems – the display and operation CAN bus and the MOST bus
- Four-wheel drive control unit J492 and ABS control unit J104 use two bus systems – the powertrain CAN bus and the FlexRay bus

The networking diagram (see page 10/11) provides a schematic overview of the communication paths of the in-vehicle control units. Which control units which are installed in the vehicle depends upon the equipment level. Here are just a few examples:

- Cornering light and headlight range control unit J745 is used in models with bi-xenon headlights and never installed in combination with the power output modules for the LED headlights.
- Multicontour seat control units are only available for models with a massage seat function
- Seat occupied recognition control unit J706 is available for the USA only

Reference
For basic information about the data bus systems previously used on Audi models, refer to Self Study Programmes 238 and 269 "Data Exchange on the CAN bus", as well as 459 "Audi A8 ’10 Onboard Power Supply and Networking"

CAN isolating connector

The Audi A7 Sportback has two CAN isolating connectors.
One isolating connector is installed in the coupling station at the A post on the bottom left, the other is located on the relay and fuse carrier in the luggage compartment at the rear right. Both connectors are identical in design and contain CAN cable couplers for up to four bus systems. However, the isolating connectors have different assignments.

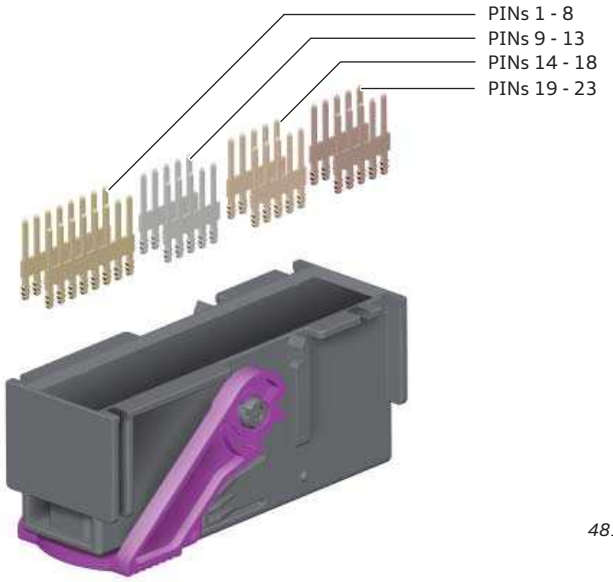

481_004

The front isolating connector is assigned to only three bus systems:

- Pins 1 – 8: node for control units on the convenience CAN bus
- Pins 9 – 13: node for control units on the powertrain CAN bus
- Pins 14 – 18: node for control units on the extended CAN bus
- Pins 19 – 23 are unused

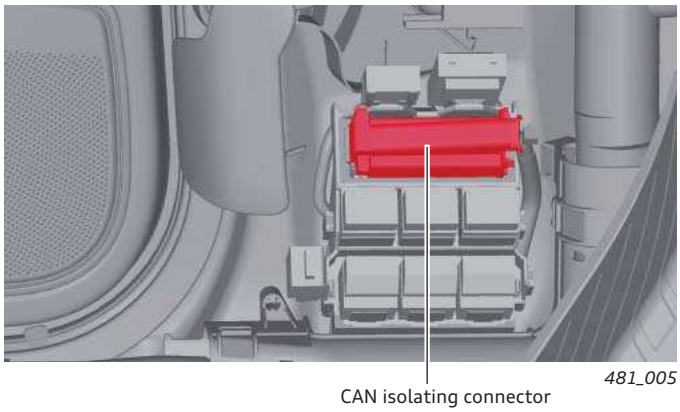

481_005

The rear isolating connector is assigned to four bus systems:

- Pins 1 – 8: node for control units on the convenience CAN bus
- Pins 9 – 13: node for control units on the powertrain CAN bus
- Pins 14 – 18: node for control units on the extended CAN bus
- Pins 19 – 23: node for control units on the display and operation CAN bus

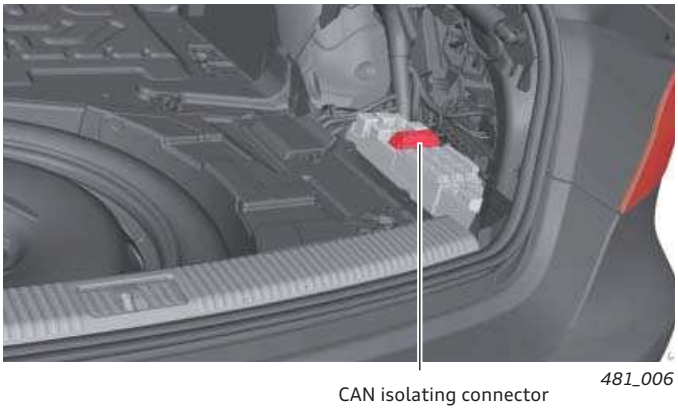

481_006

CAN adaptor V.A.G 1598/38

As with other Audi models, the CAN isolating connector provides connectivity for the CAN adaptor V.A.G 1598/38. Individual stubs can be disconnected from the CAN bus by disconnecting jumpers on the isolating adaptor.

Thus, measurements can be taken both from individual stubs and from the complete CAN bus during operation. These measurement options allow faults to be systematically analysed and identified on the CAN bus.

481_039

FlexRay

The FlexRay data bus system was first used on the Audi A8 '10 and is also used on the Audi A7 Sportback. FlexRay is an electrical two-wire bus system with a maximum data transfer rate of 10 Mbit/s. Both bus cables are referred to as bus positive (pink cable) and bus negative (green cable). FlexRay does not allow single wire operation since the voltage difference between both wires is evaluated. With this data bus system, data transfer is time-controlled, which has the advantage that the control unit developer knows exactly when the data messages are sent across the buses and when they arrive at the recipient.

With the FlexRay bus, the data bus diagnostic interface J533 acts as the controller. In a full spec Audi A7 Sportback, four FlexRay branches with eight control units are connected to the J533. Up to three control units including the controller (J533) can be connected within a branch. The control units at the end of a branch are always fitted with a low ohmic resistor (94 Ω). The intermediate control units have a high-ohmic internal resistor (2.6 kΩ). The theoretical length of cable within a branch is limited to a maximum of twelve metres.

FlexRay topology with full equipment specification

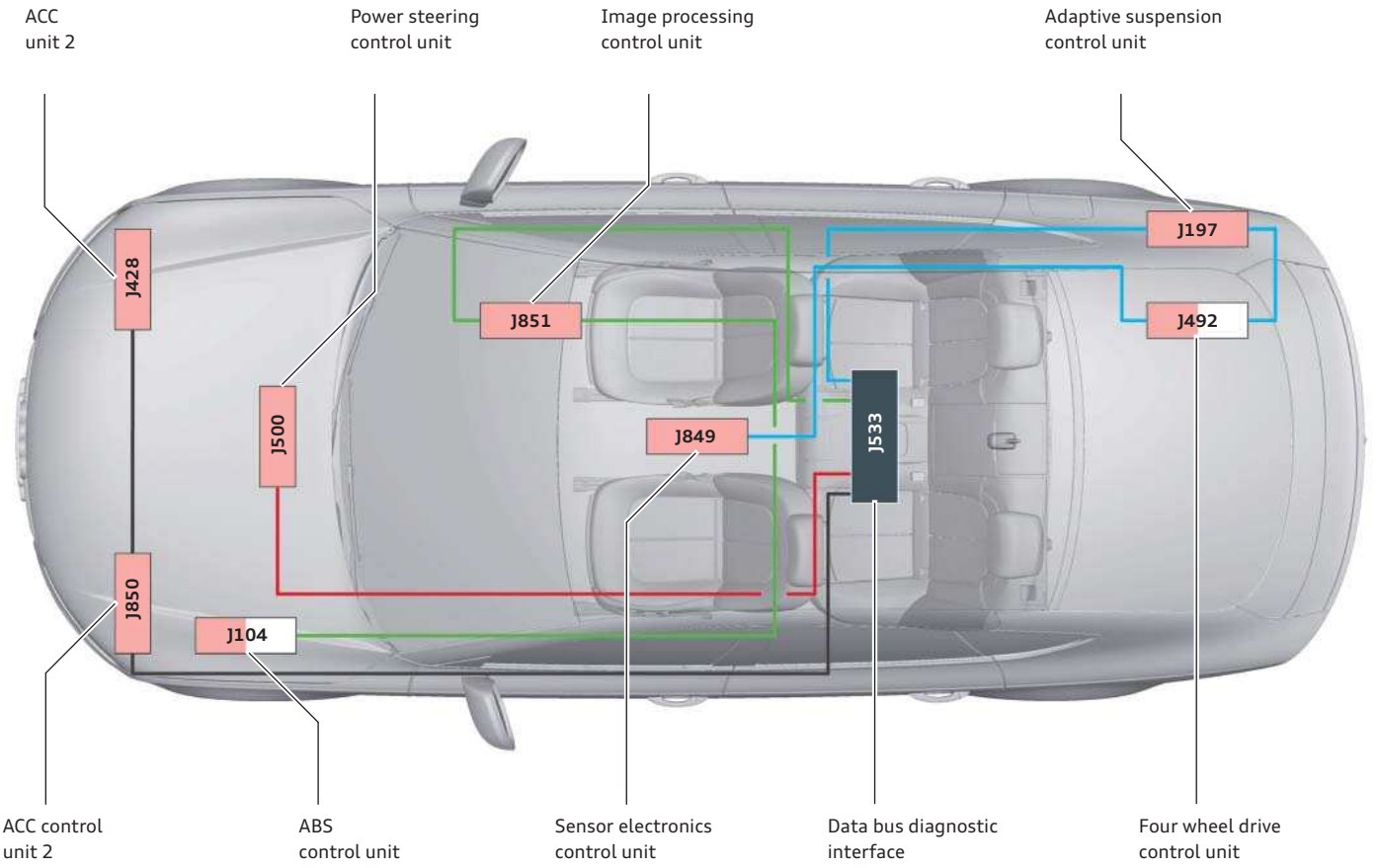

481_044

Branch	1	2	3	4[1]
Colours in the diagram				
Control units	▸ Data bus diagnostic interface J533 ▸ Image processing control unit J851[1] ▸ ABS control unit J104	▸ Data bus diagnostic interface J533 ▸ Power steering control unit J500	▸ Data bus diagnostic interface J533 ▸ Adaptive suspension control unit J197[1] ▸ Four-wheel drive control unit J492[1] ▸ Sensor electronics control unit J849	▸ Data bus diagnostic interface J533 ▸ ACC control unit 2 J850[1] ▸ ACC control unit J428[1]

[1] not standard equipment on the Audi A7 Sportback.

FlexRay topology

Within the FlexRay topology, the data bus diagnostic interface J533 is referred to as the "active hub" or "active node". The connection between J533 and, for example, J500 is referred to as a "point-to-point" connection; the other three branches are referred to as a "daisy chain" connection.

A "daisy chain" connection is a concatenation of control units. The intermediate control units have four FlexRay connections, the control units at the end only two. The FlexRay cables are routed through to the pcb of the "centre control units".

The pbs itself provides practically no resistance to the transmission of the signals. As long as the pcb of these "centre control units" is intact, FlexRay signals will be transmitted and the following control units can take part in the communication process. A faulty power supply in a "centre control unit" does not automatically mean, therefore, that a subsequent control unit has failed.

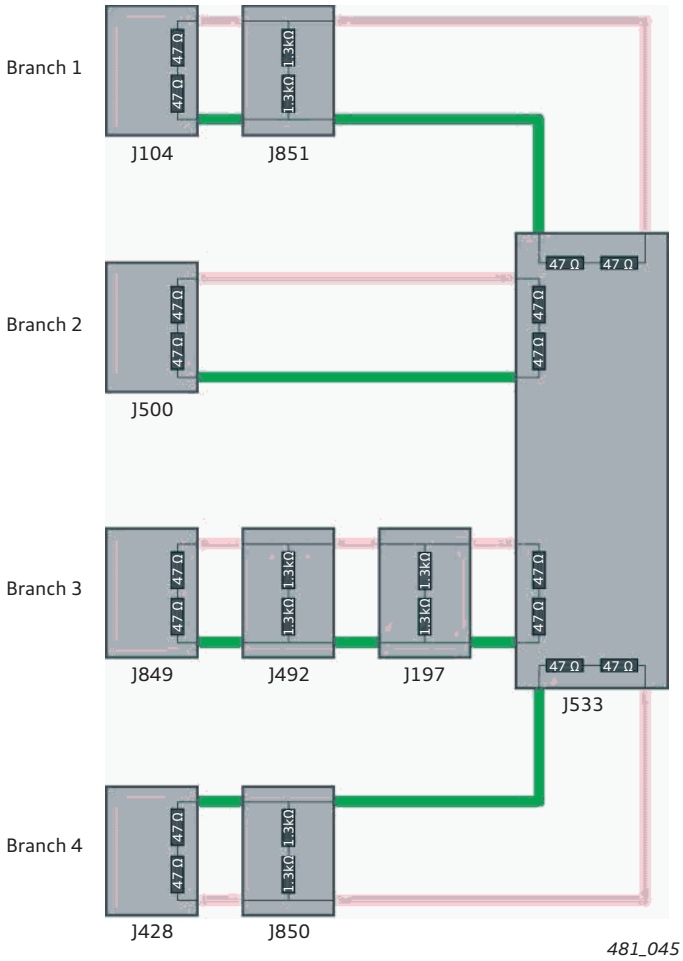

481_045

Resistors

In each control unit there are two 47 ohm resistors connected in series at the end of each FlexRay branch.
The intermediate control units also have two resistors connected in series, albeit these are 1.3 kohm resistors.

The resistors can be measured for fault-finding purposes with a multimeter, but of course only the total resistance of the control unit can be determined by taking measurements at the control unit pins. It is permissible to carry out a continuity test on the wiring of the "centre control units".

This example shows the measurement at the control units of branch 3.

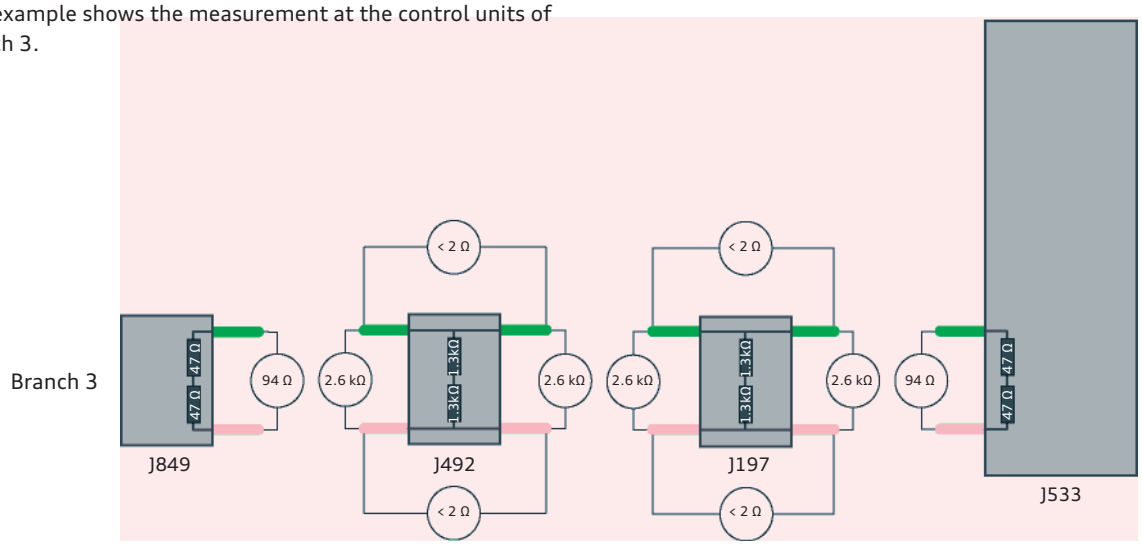

481_046

Reference
For further information about the FlexRay bus, refer to Self Study Programme 459 "Audi A8 '10 Onboard Power Supply and Networking".

Control units

Data bus diagnostic interface J533

The data bus diagnostic interface J533 is installed at the centre below the rear seat on the Audi A7 Sportback and is accessible after unclipping the rear seat.

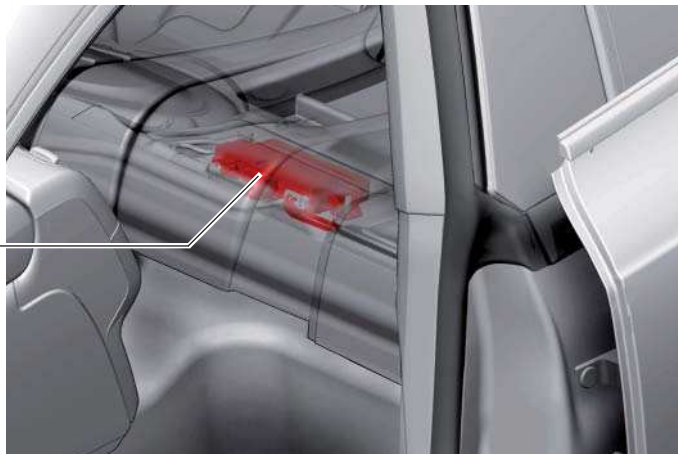

481_007

Description of control unit			
Designation	Data bus diagnostic interface J533		
Installation location	at the centre below the rear seat		
Bus systems	Convenience CAN bus	500 kbit/s	Not single-wire capable
	Powertrain CAN bus	500 kbit/s	Not single-wire capable
	Extended CAN bus	500 kbit/s	Not single-wire capable
	Display and operation CAN bus	500 kbit/s	Not single-wire capable
	Diagnostics CAN bus	500 kbit/s	Not single-wire capable
	FlexRay	10 Mbit/s	Not single-wire capable
	MOST bus	22.5 Mbit/s	Ring structure (open circuit results in failure)
	LIN bus	20 kbit/s	Single-wire bus system

Tasks	▸ Networking gateway
	▸ Diagnostic interface
	▸ Diagnostic master for MOST bus system
	▸ Transport mode (energy-optimised for transportation or long periods of non-use)
	▸ Wake-up monitor (monitors bus standby mode or bus wake-up function)
	▸ Data supplier to the on-board computer with efficiency program
	▸ Energy management
	▸ LIN master for:
	  ▸ Battery monitor control unit J367
	  ▸ Alternator C
	  ▸ Voltage stabiliser J532		

Diagnostic address	19		
Functions of J533 in vehicle diagnostic tester	▸ Read identication data ▸ Installation locations ▸ Static current measurement without current probe ▸ Final control test, alternator voltage ▸ Ring break diagnostics ▸ Optical fibre break diagnostics with 3 dB attentuation ▸ Encoding ▸ Read measured data ▸ Activate / deactivate Transport mode ▸ Activate / deactivate Showroom mode ▸ Adapt battery ▸ Reset MOST bus open circuit counter ▸ Check optical power reserve ▸ Replace control unit ▸ Read history data ▸ Read data bus standby mode ▸ Read start-stop data ▸ J533 - activate component protection		

Showroom mode with component protection feature

The Audi A7 Sportback has a Showroom mode for component-protected control units. This mode prevents unwanted deactivation of component-protected control units in showrooms and at motor shows.
Background: control units integrated in the component protection system have to be cyclically authenticated by the data bus diagnostic interface J533. This means that the component protection feature is activated in the control units if they are activated certain number of times without turning the ignition on in between.

Once Showroom mode has been activated, the data bus diagnostic interface J533 sends an authentication signal to all control units after wake-up of the bus system. Showroom mode is activated using the vehicle diagnostic tester by establishing an online link in the data bus diagnostic interface J533 via address word 19 with the guided function "Data Bus Diagnostic Interface, Component Protection - Showroom". The Showroom mode, like the Transport mode, is deactivated automatically after driving a short distance.

Energy management

The energy management system of the Audi A7 Sportback was first used on the Audi A5 and comprises:

- Data bus diagnostic interface J533
- Battery monitor control unit J367
- Alternator C
- Voltage stabiliser J532

J533 acts as the LIN master.

The "Recuperation" function is also an integral part of the energy management system on the Audi A7 Sportback, helping to improve fuel economy and keeping pollutant emissions to a minimum.

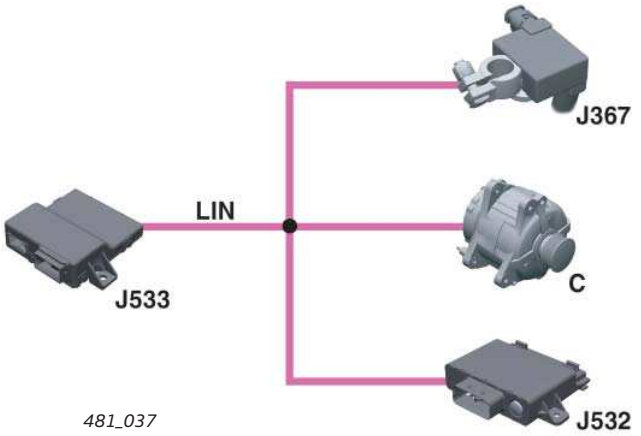

481_037

Battery monitor control unit J367

Summary	
Designation	Battery monitor control unit J367
Installation location	at the car battery's negative terminal
Tasks	Measurement of: ▸ charging and discharge currents of the car battery ▸ battery voltage ▸ battery temperature
Diagnostic address	None, LIN slave, measured data and diagnostics via data bus diagnostics interface J533 (gateway)

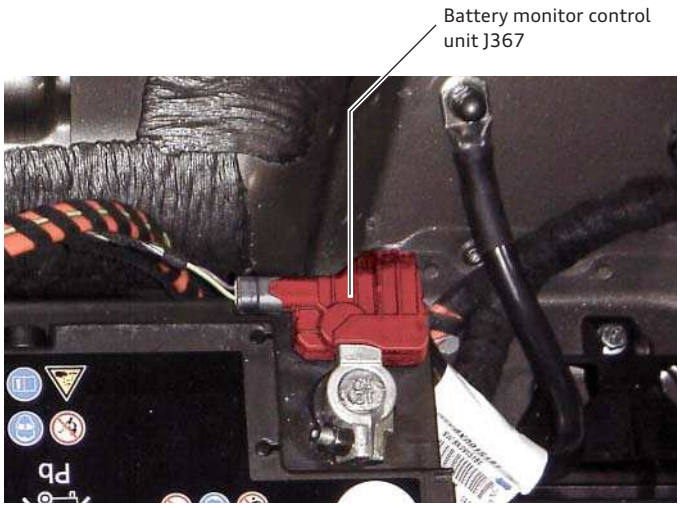

481_038

Battery current measurement

Battery current is measured at the battery's negative terminal. The electrical current present at the battery's negative terminal flows entirely through J367, i.e. through a shunt resistor. The shunt resistor has a low resistance in the milliohm range.
The drop in voltage at the shunt resistor is proportional to the electrical current. The electrical current flowing into and out of the battery can be computed from this information.

Battery voltage measurement

Battery voltage is determined by measuring the voltage directly at the battery's positive terminal. For this purpose, a measuring lead runs from the positive terminal to the battery monitor control unit J367.

Battery temperature measurement

Battery temperature is measured using an NTC temperature sensor integrated in J367. Since the NTC temperature sensor is attached directly to the battery, it can be used to reliably determine the battery's temperature.

Reference
For further information about the Recuperation function, refer to Self Study Programme 459 "Audi A8 ’10 Onboard Power Supply and Networking".

Alternator C

Summary	
Designation	Alternator C
Installation location	at the bottom front right of the engine, driven by central ribbed V belt
Tasks	Charging the vehicle battery
Diagnostic address	None, LIN slave, measured data and diagnostics via data bus diagnostics interface J533 (master)

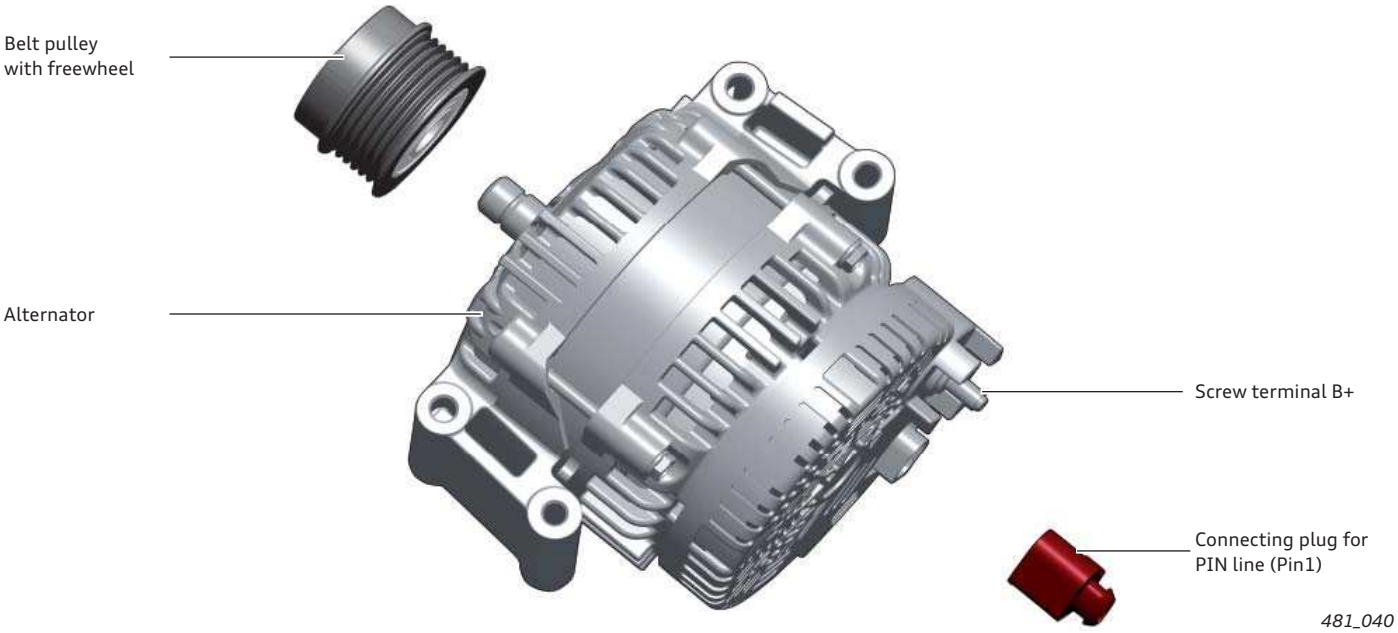

481_040

Air cooled alternators with outputs ranging from 150 A – 180 A are used on the Audi A7 Sportback. These alternators are equipped with a LIN controller and have two terminals: the bolted B+ terminal, as well as a two prong connector in which only pin 1 is assigned to the LIN line. Pin 2 remains unassigned. The data bus diagnostic interface J533 sends LIN messages to the LIN controller. Depending on the status of the onboard power supply, these LIN messages specify voltage values of between 12.2 volts and 15 volts, which the controller then sets. If these voltage values are not set, e.g. because of an interrupted LIN line, the controller will identify the problem and set a constant alternator voltage of 14.3 volts upon expiration of a pre-defined period.

The charge warning lamp in the dash panel insert does not come on during the lamp test after "terminal 15 on". This warning lamp is not activated unless a fault occurs in the alternator.
The alternator test is performed using a corresponding test program on the vehicle diagnostic tester and by internal assessment of the alternator by the energy management system in J533. Fault memory entries or history data for the alternator can also be read out using the vehicle diagnostic tester.

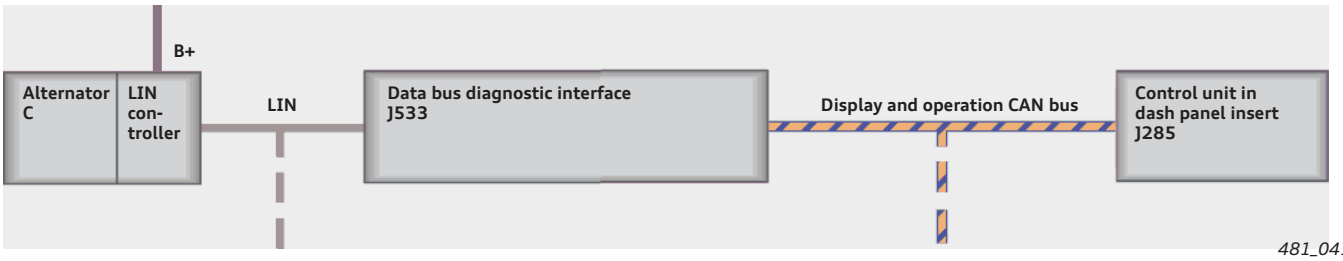

481_041

Note
To make sure that no recuperation takes place during the alternator test, the dipped beam must be switched on while running the test. Care must also be taken to ensure that the headlights are not covered by protective mats during the alternator test (this can cause the headlights to overheat). Use the front cover VAS 5191A with ventilation grilles in the vicinity of the headlights.

Voltage stabiliser J532

Summary	
Designation	Voltage stabiliser J532
Installation location	in the spare wheel well, on the right-hand side adjacent to the battery
Tasks	To stabilise the voltage for selected components during the start cycle
Diagnostic address	None, LIN slave, measured data and diagnostics via data bus diagnostics interface J533 (master)

481_042

On models with a start-stop system, increased load is placed on the battery due to the increased number of start cycles with the result that the battery voltage dips below 12 volts at start-up.
To avoid any loss of comfort during start cycles, a voltage stabiliser J532 (DC-DC converter) is fitted on all models which are equipped with a start-stop system. During a start cycle, this unit generates a stable supply voltage from the onboard power supply for selected electrical equipment.

The voltage stabiliser comes in two versions:

- Version 1: 200 watts with a single output (max. 200 watts or 16.7 amperes)
- Version 2: 400 watts with two outputs (max. 2x 200 watts or 2x 16.7 amperes)

Depending on specification, the following electrical equipment is connected to the 200 watt voltage stabiliser:

- Control unit in dash panel insert J285
- Automatic anti-glare rear-view mirror Y7
- Reversing camera system control unit J772
- Radio R
- Information electronics control unit 1 J794
- DVD auto changer R161
- TV tuner R78
- MMI display J685
- Multimedia system operating unit E380

The 400 watt version is used on models equipped with an Audi sound system. On these models, the radio is connected to the second stabilised output.
The digital sound package control unit J525 is not connected to the voltage stabiliser. This control unit has its own internal voltage stabiliser.

Schematic diagram of the 400 watt voltage stabiliser

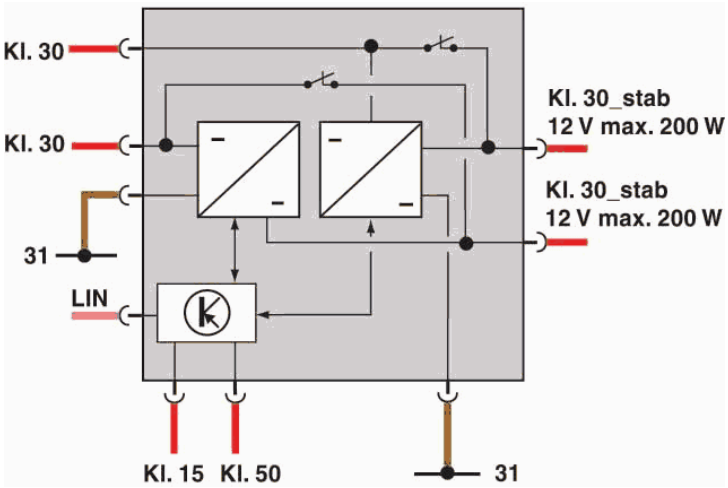

481_043

Inputs:

- 2x terminal 30
- 2x terminal 31
- 1x terminal 15
- 1x terminal 50

Outputs:

- 2x terminal 30_stabilised
- LIN bus terminal for diagnostics and status signals

Reference
For further information about the FlexRay bus, refer to Self Study Programme 459 "Audi A8 ’10 Onboard Power Supply and Networking".

Onboard power supply control unit J519

The onboard power supply control unit of the Audi A7 Sportback combines the familiar functions of the onboard power supply control unit and onboard power supply control unit 2 on the Audi A6 ’05 in addition to performing new functions.

Summary	
Designation	Onboard power supply control unit J519
Installation location	behind footwell trim, driver side
Tasks	▸ All tasks of onboard power supply control unit J519 and onboard power supply control unit 2 J520 on the Audi A6 ’05 ▸ LIN master ▸ LIN gateway
Diagnostic address	09
New functions	see overview on page 21

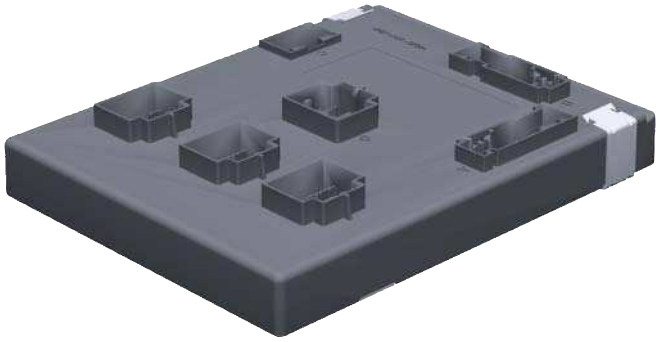

481_002

Function as LIN bus master and LIN gateway

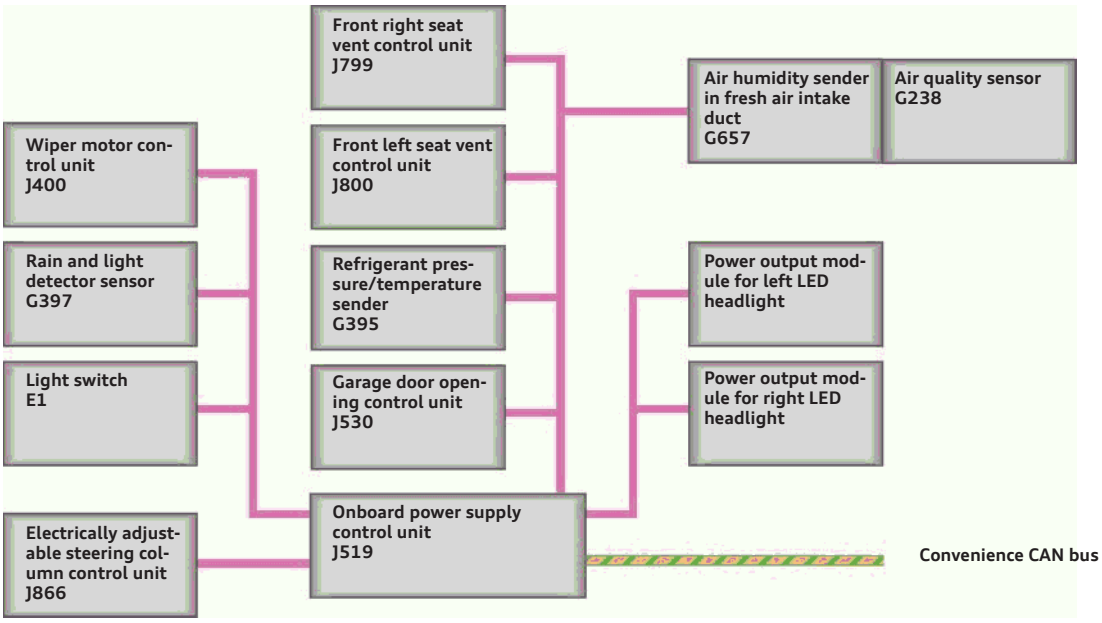

481_003

Functions in the data bus system

Onboard power supply control unit J519 is a convenience CAN bus user.
It is the master control unit for the following LIN users:

- Wiper motor control unit
- Rain/light sensor
- Light switch
- Electrically adjustable steering column control unit
- Power output module for LED headlights

The onboard control unit functions as a gateway for the following LIN bus users:

- Air quality sensor
- Air humidity sender
- Refrigerant pressure/temperature sender[1)]
- Front right seat vent control unit
- Front left seat vent control unit
- Garage door opening control unit

[1)] signal for refrigerant temperature is not utilised.

Functions	
Light functions	▸ External light mast and activation of the front lights ▸ Emergency light operation logic in case of main processor failure ▸ Read rain/light sensor via LIN bus connection ▸ Read warning light button and light ▸ Activation of the front indicators (the indicator master is the convenience electronics central control unit J393) ▸ Emergency indicator operation master (directional indication, warning indication, crash indication) in case of failure of J393 ▸ MMI gateway for tourist light (implemented for bi-xenon headlights in the cornering light and headlight range control unit J745; with LED headlights, segments are switched off)[1)] ▸ Activation of the side indicator lights via the door control units[1)] ▸ Read light switch via LIN bus connection[1)] ▸ Dynamic cornering light / adaptive light via main headlights[1)] ▸ Interior light master (interior light, front and rear footwell lights)[1)] ▸ Function and search lighting (terminal 58s, 58st, 58d)[1)]
Driver information	▸ Read ambient temperature[1)] ▸ Read oil pressure switch[1)] ▸ Read brake pad wear warning[1)] ▸ Read brake fluid warning[1)] ▸ Read coolant warning[1)] ▸ Read wash water warning[1)] ▸ Read light warning[1)]
A/C functions	▸ Activation of front seat heater[1)] ▸ LIN gateway for air quality sensor, refrigerant pressure sensor and air humidity sensor in fresh air intake duct[1)] ▸ LIN gateway for seat heating and seat ventilation[1)] ▸ Activation of A/C compressor[1)]
Wipe/wash function	▸ Activation of the wiper control unit J400 via LIN bus connection ▸ Read rain/light sensor via LIN bus connection ▸ Activation of the windscreen washer pump ▸ Activation of headlight cleaning pump[1)]
Interface to convenience electronics central control unit J393	▸ Enabling signal for electrical steering column lock (discrete and via CAN)[1)] ▸ Feedback from discrete terminal 15 (message to J393 via CAN)[1)] ▸ Valet parking button E536 and function LED (Valet Key)[1), 2)] ▸ Read rear roller blind button[1)]
Other functions	▸ Activation of signal horn relay ▸ Read reversing light switch (CAN information from twin clutch gearbox mechatronics J743) ▸ Read hand brake switch (CAN information from electromechanical parking brake) ▸ Read bonnet contact ▸ Read settings via MMI (exterior light, interior light, wiper, Audi drive select und home link) ▸ LIN gateway for garage door opener control unit[1)] ▸ Plausibilised terminal 15: Terminal 15 via CAN or terminal 15 via discrete line[1)] ▸ Coordinator for Audi drive select[1)]
Special functions	▸ Energy management system power-down levels ▸ Transport mode (interior light, footwell lights, Coming/Leaving Home, daytime running light, heated window washer jets) ▸ Component protection system user

[1)] new functions to those performed on the Audi A6 ’05 by onboard power supply control units J519 and J520.

[2)] for the North American market only

Exterior lighting

Light switch

The light switch of the Audi A7 Sportback is similar in design and type to that of the Audi A8 ’10 and differs only in respect of the optional head-up display position control.

Summary	
Designation	Light switch E1
Installation location	Dash panel, driver side
Tasks	To indicate the driver's preferred light setting to the onboard power supply control unit
Diagnostic address	None, LIN slave, measurement values and diagnostics via onboard power supply control unit J519 (master)

481_053

Function

The rotary knob has four settings:

0 Lights off (in some countries the daytime running light is switched on automatically at "terminal 15 on")

AUTO The automatic daytime running light is switched on and off depending on the light sensor (this position is also a prerequisite for the "headlight assist" and "intelligent light system" functions)

Side light

Dipped beam

Electrical connections and circuit

All signals from the switches, buttons and controls accommodated in the light switch are read in by the onboard power supply control unit via the LIN line. Furthermore, the commands for the switch lighting and the warning lamps of the individual functions are sent to the light switch by the onboard power supply control unit.
The redundancy line is connected to ground via an electronic circuit inside the switch and serves to plausibilise the switch position.

In the event of a short circuit or open circuit in the LIN line or redundancy line, the emergency light function is activated by the onboard power supply control unit ("dipped beam on") and a diagnostic trouble code is entered in the fault memory of the onboard power supply control unit.

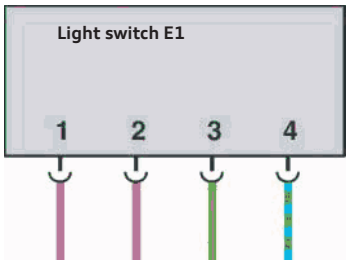

481_054

Terminals:

Pin 1 LIN (to onboard power supply control unit J519)
Pin 2 Terminal 30
Pin 3 Terminal 31
Pin 4 Redundancy line (to onboard power supply CU J519)

Reference
For further information on the head-up display, refer to Self Study Programme 482 "Audi A7 Sportback Head-up Display and Speed Limit Indicator".

Control panel

Button functions

The light switch control panel has a different design depending on equipment level. Four different versions are possible.

The following functions can be switched on and off via the control panel:

All-weather light (on vehicles with bi-xenon headlights and adaptive light or LED headlights)

Night vision assist

Rear fog light

481_055

Reference
For a description of the design and function of night vision assist system, refer to Self Study Programme 462 "Audi A8 ’10 Night Vision Assist".

headlights

Basically, a distinction is made between two types of headlight on the Audi A7 Sportback.

- Bi-xenon headlights
- LED headlights

Bi-xenon headlights are available in three versions:

- Version A = bi-xenon
- Version B = bi-xenon with adaptive light (AFS)
- Version C = bi-xenon with adaptive light (AFS) and "intelligent light system"

Another coding version also exists on account of the fact that the "intelligent light system" function is not permitted in some countries (e.g. USA). Version B is installed on models for these countries, but the intelligent headlight range adjustment actuator is used here only for switching between dipped beam and main beam.

All bi-xenon headlights use identical illuminants. However, the light functions, activation mechanisms and headlight range adjustment configurations differ.

Bi-xenon headlights

481_010

LED headlights

Like the Audi A8 ’10 with its LED headlights, the Audi A7 Sportback uses LED technology for all its light functions.

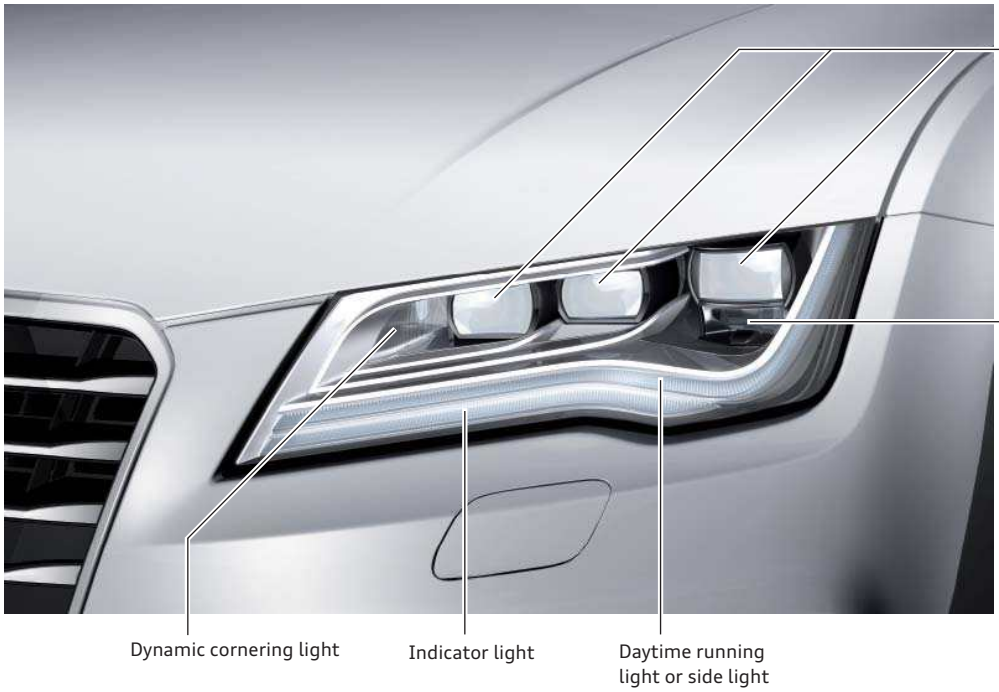

481_011

Bi-xenon headlights

Light functions	Illuminants used	Power output
Side light	14 LEDs, dimmed	not specified
Daytime running light	14 LEDs	not specified
Indicator light	Bulb (PY24W)	24 watts
Dipped beam	Gas discharge lamp (D3S)	35 watts
Main beam		
All-weather light	Bulb (H8)	35 watts

Bi-xenon headlights – light functions

Dipped beam

A gas discharge lamp and lens produce an asymmetric dipped beam.

481_056

Main beam

A gas discharge lamp and lens as well as an electrically actuated shutter covering the asymmetric range produce a symmetrical main beam. This function can be activated with the main beam stalk or by the headlight assist system.

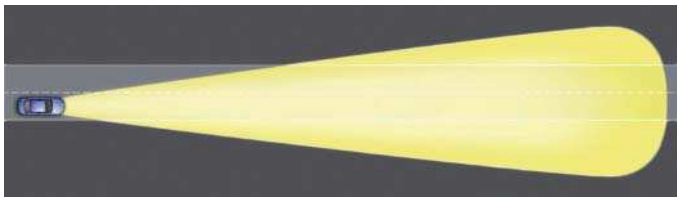

481_057

All-weather light

Close-range light with low self-dazzling effect through activation of the H8 bulb on both sides in addition to the dipped beam.

481_058

Bi-xenon headlights – component parts

In addition to the replaceable parts of all Audi A7 Sportback headlights, such as caps, repair tabs, screws and vents, the following specific component parts of the bi-xenon headlights are also replaceable:

To replace the headlight range control servomotor, the headlight housing must be cut open and then re-sealed with a repair cover and seal.

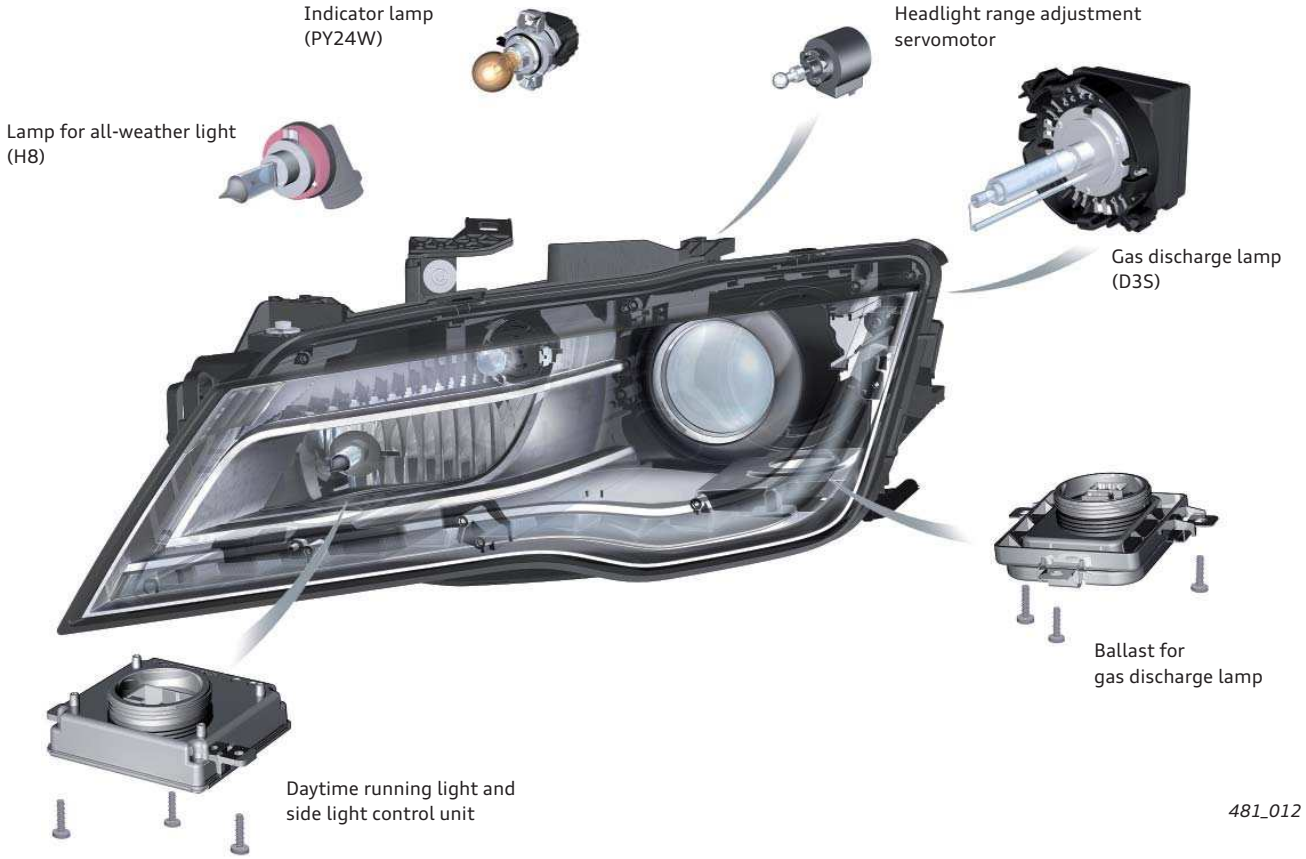

481_012

Activation mechanism

The individual lights and the control unit for the daytime running light and side light in the bi-xenon headlights are activated discretely by the onboard power supply control unit J519.
The headlight range control system is activated discretely by the headlight range adjustment control unit J431.

Adaptation for driving on the opposite side of the road

The headlights can be adapted for driving on the opposite side of the road via the MMI. In the "CAR" menu, the setting "Lights for driving on left" or "Lights for driving on right" can be selected under the menu option "Exterior lighting".
The adjustment is made by lowering the light level via the headlight range control servomotors.

Schematic diagram of the activation mechanism

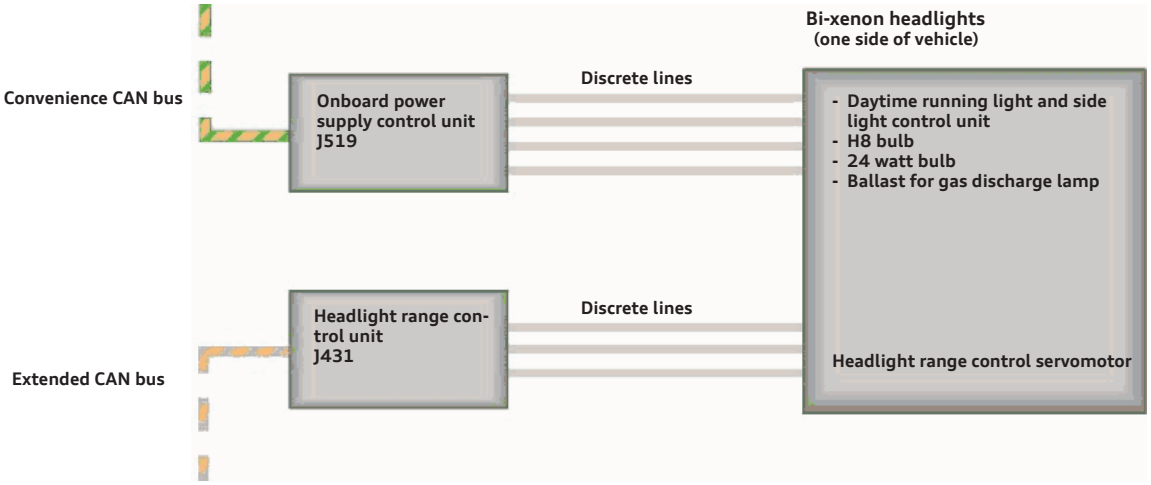

481_059

Bi-xenon headlights with adaptive light

Light functions	Illuminants used	Power output
Side light	14 LEDs, dimmed	not specified
Daytime running light	14 LEDs	not specified
Indicator light	Bulb (PY24W)	24 watts
Country road light	Gas discharge lamp (D3S)	35 watts
Motorway light[1)]		
Main beam		
Town light[1)]		
All-weather light[1)]		
Dynamic cornering light	Bulb (H8)	35 watts
Intersection light[1), 2)]		

[1)] not for the North American market

[2)] only for models equipped with a navigation system

Implementation of different light functions

On the Audi A7 Sportback with bi-xenon headlights, two sheet-metal profiles are positioned in front of the gas discharge lamp. These sheet-metal profiles partially mask the light beams of the light source. They are mounted rotatably on one side and can be moved individually in a vertical direction in front of the light source by a servomotor.

Different light functions can thus be implemented. In addition, the complete projection module - comprising the reflector, lens, gas discharge lamp and sheet-metal profiles - can be swivelled sideways by a motor (not shown) to produce a dynamic cornering light.

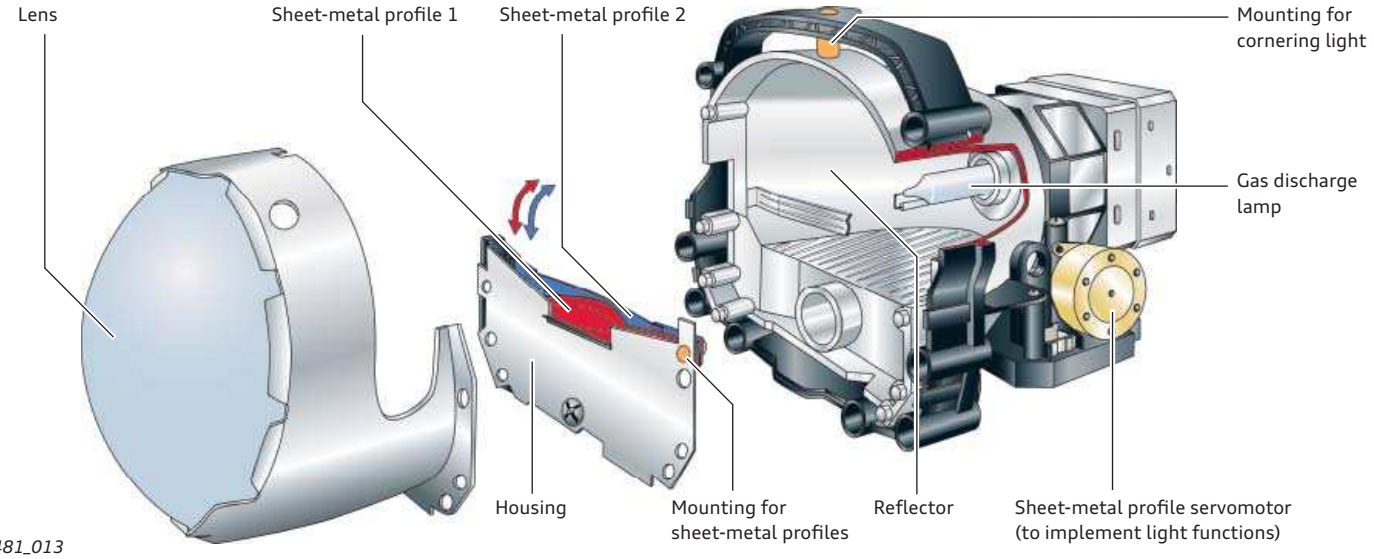

481_013

Bi-xenon headlights with adaptive light – light functions

Country road light

The gas discharge lamp produces an asymmetric dipped beam. The country road light is active at speeds upwards of 50 kph. If the vehicle exceeds a speed of 110 kph for an extended period, the country road light switches over to the motorway light. The motorway light is activated immediately if the vehicle exceeds 130 kph.

On models equipped with a navigation system, the country road light is always active if the system does not recognise a built-up area or motorway driving. Dynamic swivelling is also possible with the country road light function.

481_060

Motorway light

The gas discharge lamp produces an asymmetric dipped beam. The left edge of the road is further illuminated. The motorway light is activated if the vehicle exceeds 110 kph for an extended period or immediately if the vehicle exceeds a speed of 130 kph.

On models equipped with a navigation system, the motorway light is activated when the vehicle is travelling faster than 80 kph and the navigation system recognises motorway driving. Dynamic swivelling is possible with the country road light function.

481_061

Main beam

The gas discharge lamp produces a symmetrical main beam. The main beam can be activated with the main beam stalk.

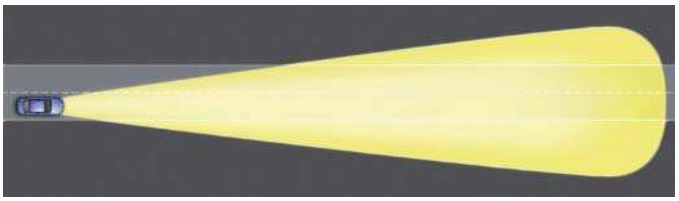

481_062

Town light

A symmetrical close-range light is produced by the gas discharge lamp, and the projection modules are swivelled slightly outwards or downwards. The town light is activated at speeds of between 5 kph and 50 kph and at between 0 kph and 60 kph on models equipped with a navigation system if the navigation system recognises a built-up area. Dynamic swivelling is not possible with the "Town light" function.

481_063

All-weather light

The all-weather light is an asymmetric close-range light which is produced by a gas discharge lamp with a low self-dazzling effect. The left projection module is swivelled slightly outwards and the headlight range is reduced by slightly lowering the light beam.

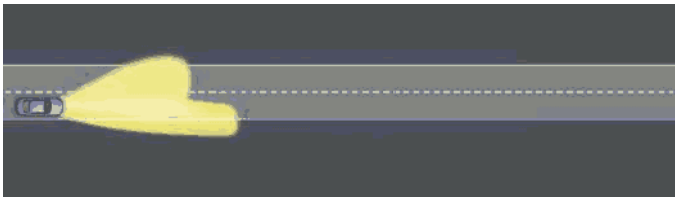

481_064

Dynamic cornering light

The dynamic cornering light is produced by activating the H8 bulb on one side of the vehicle at speeds of less than 70 kph, when heavy steering lock is applied or when the indicators are activated and the vehicle is travelling at less than 40 kph. It is activated additional to the country road light (see diagram on right) and town light.

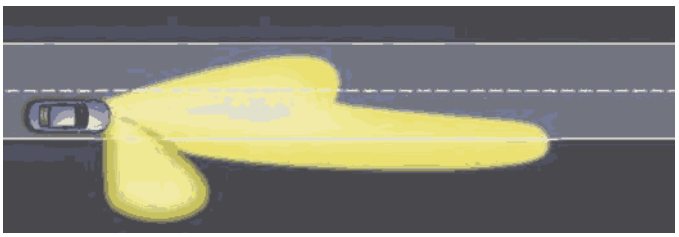

481_065

Intersection light

The light function "Intersection light" is also available for models equipped with a navigation system. The intersection light is produced by switching on both static cornering lights. It helps the driver to detect hazards from the side at road intersections and is activated ahead of the intersection.
The intersection light is always lit in combination with other lights. It is activated together with the town light when driving in built-up areas (see diagram on right) and together with the country road light when driving on country roads at speeds of up to 60 kph.

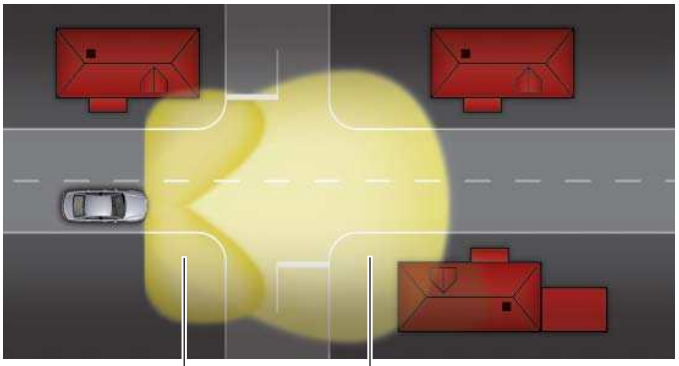

481_066

Bi-xenon headlights with adaptive light – component parts

The following parts of bi-xenon headlights with adaptive light are replaceable

To replace the headlight range control servomotor, the headlight housing must be cut open and then re-sealed with a repair cover and seal.

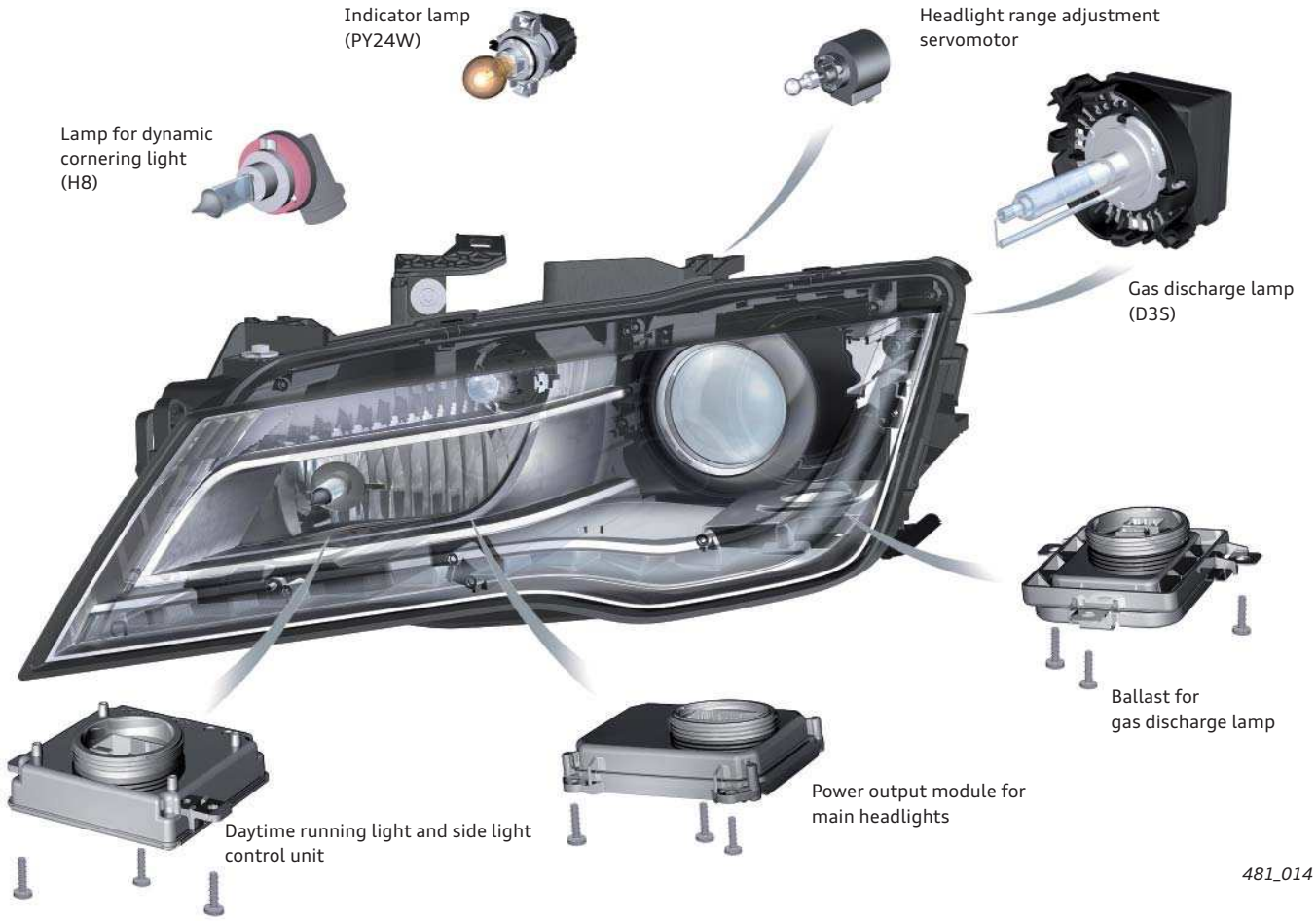

481_014

Activation mechanism
The onboard power supply control unit J519 activates the daytime running light and side light control unit, the 24-watt bulb and the ballast for the gas discharge lamp via discrete lines.

Cornering light and headlight range control unit J745 activates the power output module for the headlights via a private CAN bus. This module activates the sheet-metal profile adjuster motor, the headlight range control servomotor, the cornering light servomotor and the H8 bulb via discrete lines.

Adaptation for driving on the opposite side of the road
The headlights can be adapted for driving on the opposite side of the road via the MMI. In the "CAR" menu, the setting "Lights for driving on left" or "Lights for driving on right" can be selected under the menu option "Exterior lighting".

The bi-xenon headlights with adaptive light have a "Town light" function.

Schematic diagram of the activation mechanism

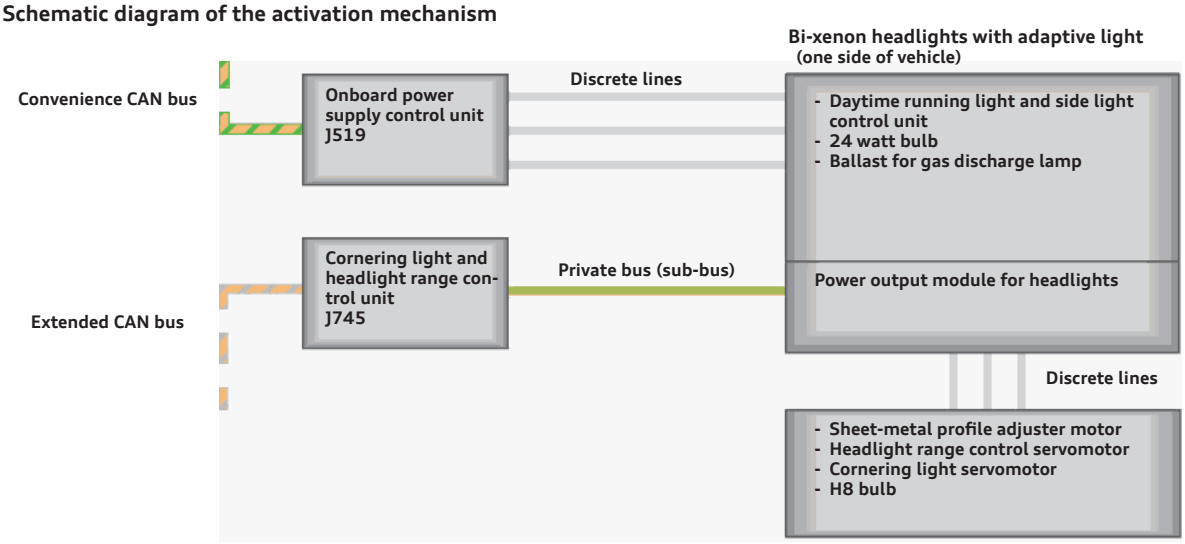

481_015

Bi-xenon headlights with adaptive light and "intelligent light system"

The design and component parts are identical to those of the bi-xenon headlights with adaptive light.
The "intelligent light system" function also requires the camera control unit J852 in order to monitor the actual traffic situation, i.e. oncoming vehicles, vehicles ahead and built-up areas.

This enables the headlights to switch dynamically between dipped beam and main beam by continuous adjustment of the sheet-metal profiles depending entirely on how fast the vehicle is travelling.

Summary	
Designation	Camera control unit J852
Installation location	on the windscreen, over the base of the interior rear-view mirror
Tasks	▸ Intelligent light system ▸ Audi lane assist
Diagnostic address	85

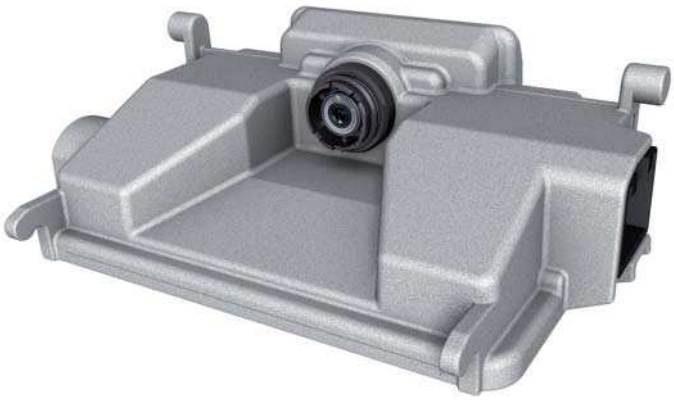

481_067

Schematic diagram of the activation mechanism

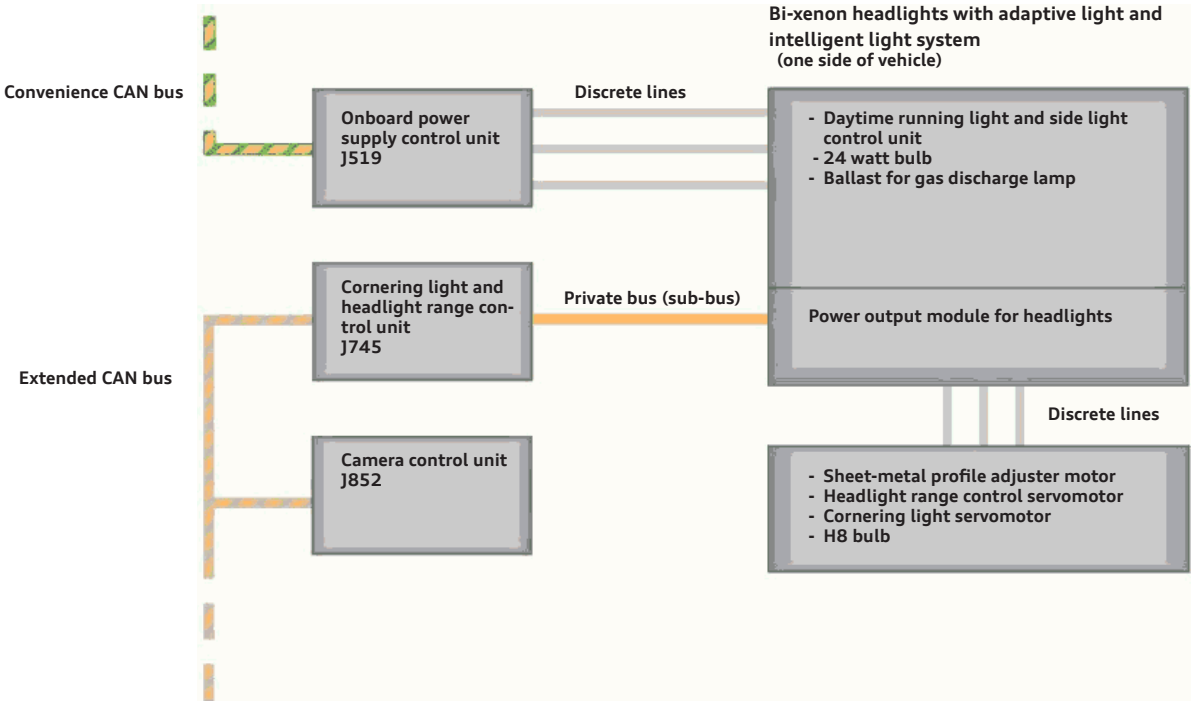

481_068

Reference
For a description of the design and function of "intelligent light system", refer to Self Study Programme 461 "Audi A8 ’10 Driver Assistance Systems".

LED headlights

Light functions	Illuminants used
Side light	18 LEDs (white, dimmed)
Daytime running light	18 LEDs (white)
Indicator light	11 LEDs (yellow)
Dipped beam	16 LEDs (2x 2-chip, 2x 2-chip, 2x 4-chip)
Main beam	20 LEDs (1x 4-chip, in addition to dipped beam)
Motorway light	16 LEDs (2x 2-chip, 2x 2-chip, 2x 4-chip)
Dynamic cornering light	20 LEDs (1x 4-chip, in addition to dipped beam)
All-weather light	20 LEDs (1x 4-chip, in addition to dipped beam)
Tourist light (for driving on opposite side of road)	8 LEDs (2x 2-chip, 2x 2-chip)
coming home / leaving home	8 LEDs (2x 2-chip, 2x 2-chip)

LED headlight functions

Daytime running light / side light

The daytime running light and side light are produced by 18 white LEDs. They are activated by a pulse width modulated (PWM) signal. The LEDs are dimmed for the side light function.

481_069

Dipped beam

The dipped beam consists of three single modules. The inner two modules are fitted with two 2-LED chips. Two 4-LED chips are installed in the outer module. The LEDs of the daytime running light are dimmed to side light level.

481_070

Indicator light

The indicator light is produced by eleven yellow LEDs. In the ECE version, the LEDs of the daytime running light are dimmed to side light level during the indicating cycle. In the SAE[1)] version, the daytime running light LEDs are deactivated during the indicating cycle due to different statutory requirements.

481_071

Main beam

With the main beam function, a 4-LED chip is activated in addition to the dipped beam LEDs, and a reflector below the outer LED module is enabled by switching over the shutter. The main beam can be activated with the main beam stalk or by the main beam assist function.

481_072

[1)] SAE = for the North American market

Motorway light

The motorway light is produced by the dipped beam LEDs. At the same time, the two inner LED modules are raised by the headlight range control servomotor and, thus, the headlight range is increased slightly within this zone. The motorway light is activated if the vehicle exceeds 110 kph for an extended period or immediately if the vehicle exceeds 140 kph.

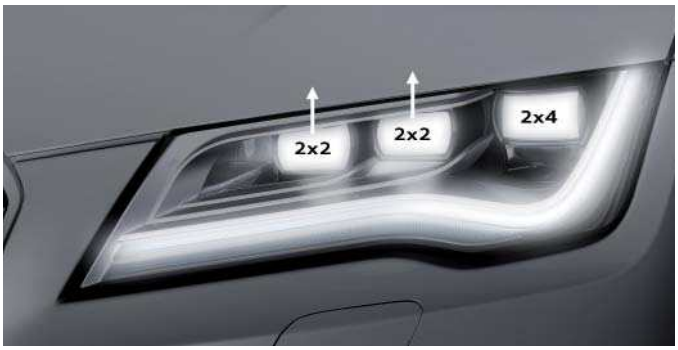

481_073

Dynamic cornering light

In the case of the dynamic cornering light, a 4-LED chip on the inside of the headlight is activated in addition to the dipped beam function. These LEDs have a reflector which illuminates the side area of the vehicle when turning a corner. A condition for this is either that the indicators are activated and the vehicle is travelling at a speed of less than 40 kph or heavy steering lock is applied at a speed of less than 70 kph.

481_074

All-weather light

The all-weather light function is produced by the same LEDs as the dynamic cornering light. In the case of the all-weather light, however, the 4-LED chip on the inside of the headlights and the two 4-LED chips in the outer LED module are dimmed to 50% luminance. In addition to this, the two inner LED modules are raised slightly by the headlight range control servomotor. The all-weather light can activated with the upper button in the control panel of the light switch.

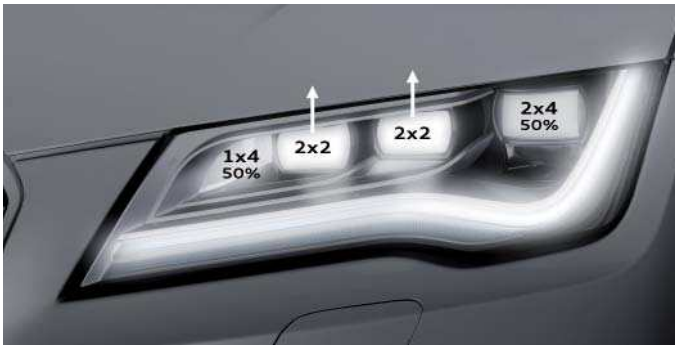

481_075

Tourist light

The tourist light is designed to avoid dazzling oncoming traffic when driving in countries where traffic uses the opposite side of the road. The dipped headlight function is used for this purpose, and the outer LED module is deactivated. The tourist light can be activated via the relevant setting in the MMI.

481_076

coming home / leaving home

Both inner LED modules are used for the coming home / leaving home functions. These functions are activated either when leaving the vehicle by opening the driver door or when the central locking is unlocked with the remote control key. The condition for this is that the light switch is in the "AUTO" position, the rain and light detector sensor detects "dark" and both functions are enabled in the MMI (lights "on" when leaving / lights "on" when unlocking).

481_079

LED headlights – component parts

The following parts of the LED headlights are replaceable:

Schematic diagram of the activation mechanism

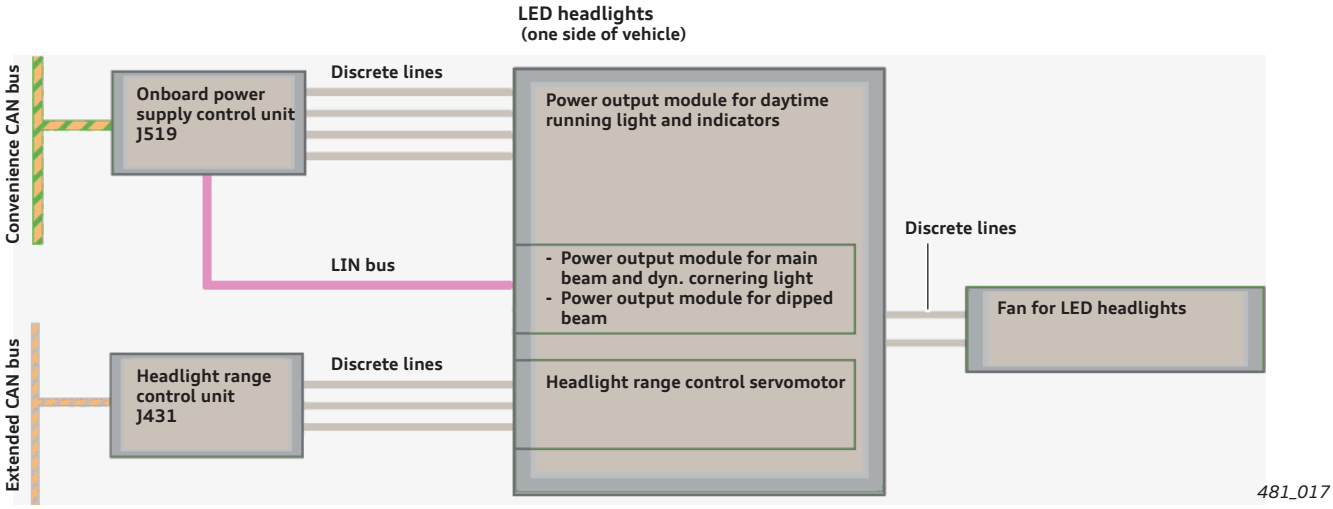

The power output module for the main beam and cornering light is activated via discrete lines by onboard power supply control unit J519.
The power output module for the main beam and cornering light as well as the power output module for the dynamic cornering light are LIN slaves of the onboard power supply control unit.

These LIN slaves monitor both ventilator fans in the LED headlights via discrete lines. The fans are activated at "terminal 15 on" and run continuously until terminal 15 is deactivated again.

Note
Caution! ESD protection must be ensured during all work on the headlights, particularly when replacing internal components. Workshop equipment VAS 6613 is available for this purpose (see page 38).

Side marker lights

(SAE[2] only)

Vehicles for the North American market come equipped with side marker lights due to statutory regulations.

In the case of the Audi A7 Sportback, this light function is not accommodated in the tail lights or in the headlights, rather is performed by separate lights integrated in the vehicle's bumpers. The lights are clipped into the bumper covers and fitted with a 5 watt bulb (W5W).

481_047

Tail lights

The tail lights of the Audi A7 Sportback comprise two parts per side of the vehicle: a light module in the side wall and another in the boot lid. All functions utilise LED technology, except the reversing light function which uses a 16 watt bulb (longlife).

The tail lights come in two different versions - an ECE[1] version and an SAE[2] version. The SAE lights use only red LEDs and the activation mechanism differs depending on the statutory regulations applicable to the ECE lights.

Externally, the lights are identical. The reversing light functions are activated by the convenience system central control unit J393.
LEDs or electronics of the tail lights cannot be replaced.
After removing the light, only the 16-watt bulb (HP16W) fitted in the side wall light can be replaced. This bulb is not designed to be replaced by the customer.

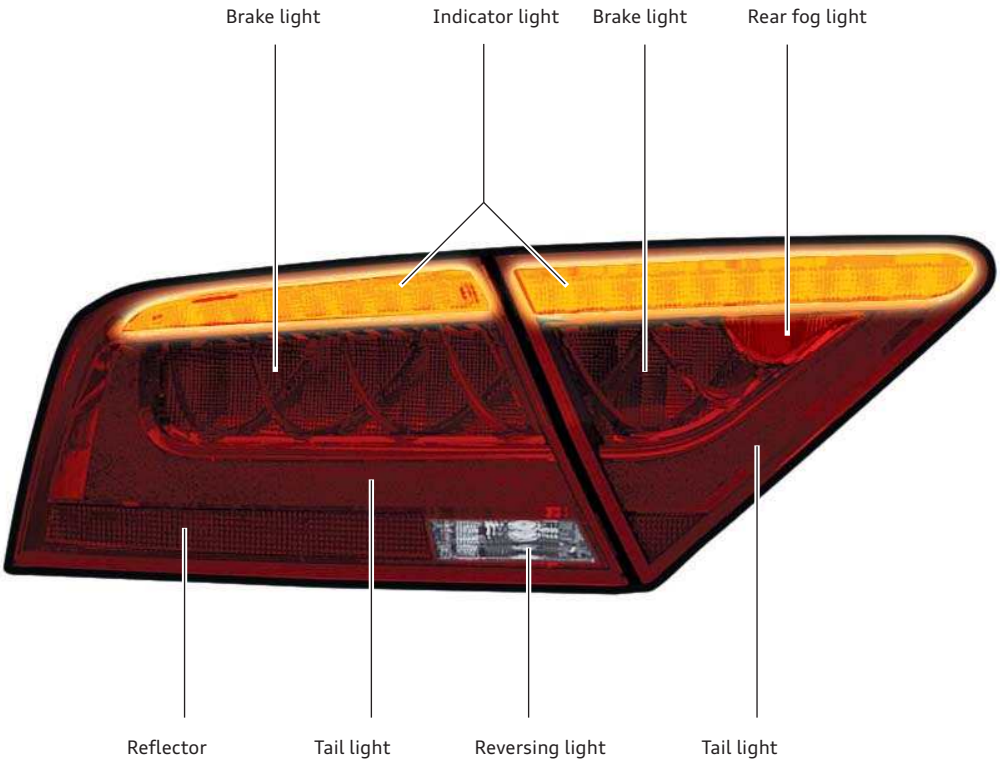

481_048

[1] ECE = for the European market

[2] SAE = for the North American market

Tail light functions in day design

ECE[1)]

Brake light
The brake light in the ECE version is produced by a total of 19 red LEDs, of which 12 are located in the side wall light and 7 in the boot lid light.

481_019

Indicator light
The indicator light in the ECE version is produced by 21 yellow LEDs in the upper section of the tail light, 10 LEDs in the side wall light and 11 LEDs in the boot lid light.

481_021

Reversing light
The reversing light function is performed by a 16 watt bulb (HP16W, longlife) in the side wall light only.

481_023

SAE[2)]

In the SAE version of the brake light, an additional 21 red LEDs are activated in the upper section of the tail lights.

481_020

All 40 LEDs are of the brake light are used for the indicator light in the SAE version. In both versions, the corresponding LEDs flash at a frequency of approx. 1.5 Hertz.

481_022

The reversing light function is performed by a 16 watt bulb (HP16W, longlife) in the side wall light only.

481_024

[1)] ECE = for the European market

[2)] SAE = for the North American market

Tail light functions in night design

ECE[1)]

Tail light
With this light function, 18 red LEDs in the side wall light and 9 LEDs in the boot lid light are lit.

481_025

Tail light and brake light
If the brakes are applied while the tail light is on, the 19 red LEDs of the brake light function will additionally be activated.

481_027

Tail light and indicator light
In this scenario, 27 red LEDs are activated for the tail light and 21 yellow LEDs for the indicator light.

481_029

SAE[2)]

With this light function, 18 red LEDs in the side wall light and 9 LEDs in the boot lid light are lit.

481_026

In the SAE version, 40 LEDs are lit in addition to the tail light.

481_028

In the SAE version, the 27 red LEDs for the tail light are lit and an additional 40 red LEDs flash.

481_030

[1)] ECE = for the European market

[2)] SAE = for the North American market

ECE[1)]

Tail light, brake light and rear fog light
In this scenario, the following LEDs are lit: the 27 red LEDs of the tail light, one red LED in the boot lid light for the rear fog light and 12 red LEDs for the brake light in the side wall light. In this case, the brake light LEDs of the boot lid light must not be activated, so as to comply with the statutory minimum distance between the brake light and rear fog light.

481_031

SAE[2)]

The difference between this version and the ECE version shown on the left is that the 10 LEDs in the upper chamber are lit in the side wall light shown here. In the boot lid light above the rear fog light LED, only 6 of the 11 LEDs are activated.

481_032

Light functions not shown

High-level brake light
Irrespective of tail light version, all Audi A7 Sportbacks have a high-level brake light at the top edge of the rear window.

This light comprises a total of 48 LEDs and assists the brake light function.

Emergency braking signal[3)]
In an emergency braking situation, the brake light initially flashes at a frequency of 3 Hertz until the vehicle comes to a standstill, after which the warning flashers are activated.

The trigger for an emergency braking signal need not always have to be the driver depressing the brake pedal; actuating the parking brake or a corresponding command from the cruise control system can also be the reason.

However, other requirements also have to be met at the time of triggering, e.g. a road speed of over 60 kph, a pre-defined brake pressure or deceleration value (depending on the coefficients of friction between the road and the tyres), ABS intervention at a minimum of two wheels, of which at least one must be a front wheel.

If these criteria have been met, the ABS control unit J104 sends an emergency braking signal via the data bus. The convenience system central control unit J393 receives this signal and then activates the tail lights accordingly. At present, this function cannot be tested using workshop equipment.

Light functions	ECE version[1)]	SAE version[2)]
Brake light	19x LED	40x LED
Indicator light	21x LED	40x LED
Tail light	27x LED	27x LED
Rear fog light	28x LED	34x LED
High-level brake light	48x LED	48x LED
Reversing light	1x HP16W, 16 watts	1x HP16W, 16 watts
Sider marker light (SAE only[2)])	-	1x W5W, 5 watts

[1)] ECE = for the European market
[2)] SAE = for the North American market
[3)] not approved for use in all countries.

Electronic repairs with ESD protection

Electrostatic discharge is one of the most common causes of failure in semiconductor elements. Integrated semiconductor modules and LEDs are particularly sensitive and are capable of withstanding only very low voltages.

Until now, protection of these components against against electrostatic discharge was tested continuously in the various stages of the process chain from manufacturing to in-workshop replacement. For this reason, electrostatically sensitive components previously had to be replaced completely.

ESD protection process chain

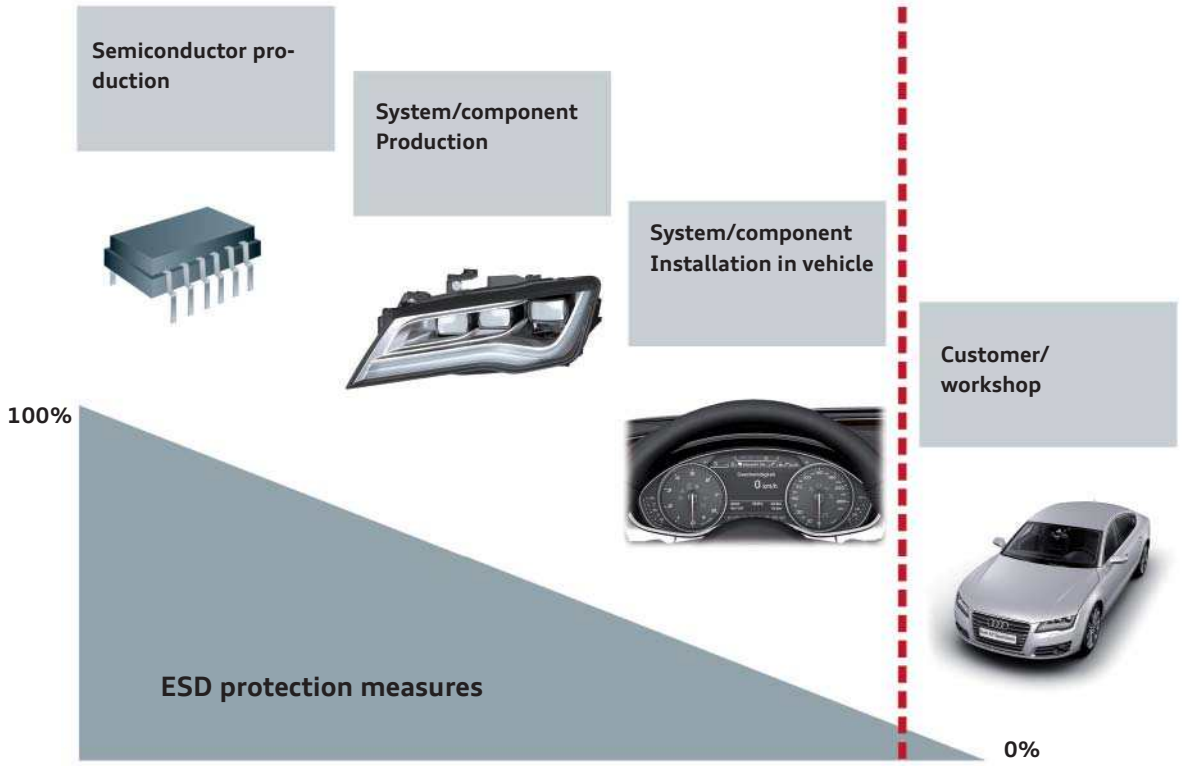

481_077

Workshop equipment VAS 6613

Electronic repairs are approved for the following modules on the Audi A7 Sportback:

- LED headlights
- Xenon headlight

A requirement for carrying out such repairs, in addition to the utmost safety and care, is an ESD protected workplace. Such a workplace was made possible with workshop equipment VAS 6613.

The introduction of the ESD protected workplace has made it possible to replace component parts in electronic modules, thus opening up further scope for applications in future.

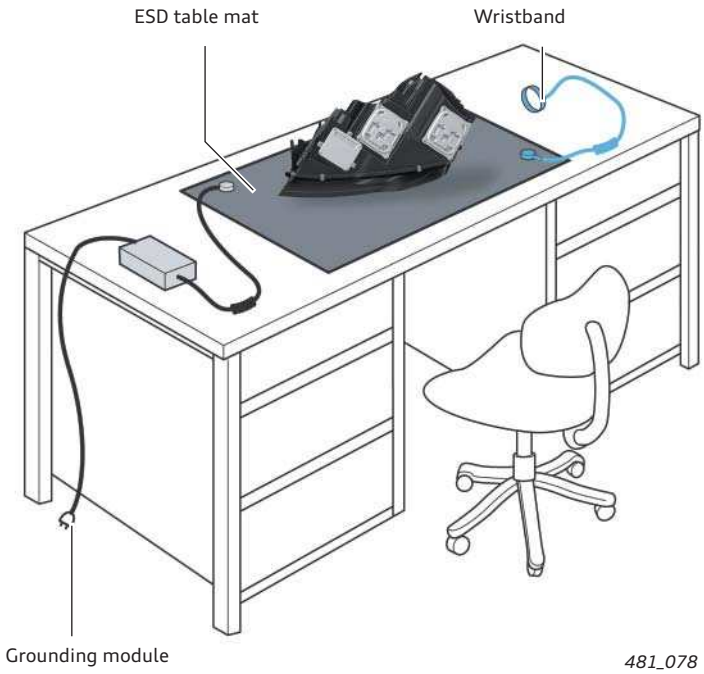

481_078

Self Study Programmes

For further information about the technology of the Audi A7 Sportback, refer to the following Self Study Programmes.

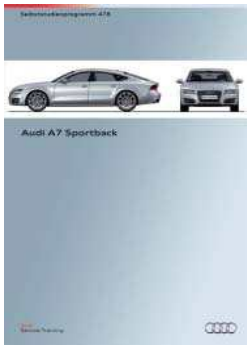

481_033

481_034

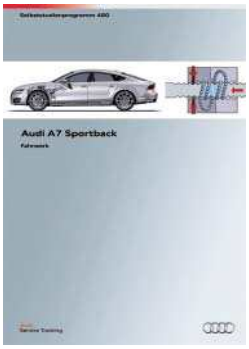

481_080

SSP 478 Audi A7 Sportback, order number: A10.5S00.71.20
SSP 479 Audi 3.0l V6 TDI engine (second generation), order number: A10.5S00.72.20
SSP 480 Audi A7 Sportback Chassis, order number: A10.5S00.73.20

481_051

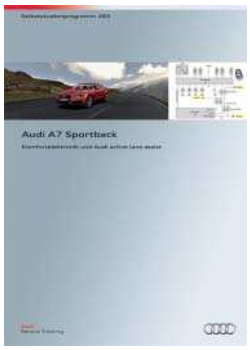

481_052

481_035

SSP 482 Audi A7 Sportback Head-up Display and Speed Limit Indicator, order number: A10.5S00.75.20
SSP 483 Audi A7 Sportback Convenience Electronics and Audi active lane assist, order number: A10.5S00.76.20
SSP 484 Audi A7 Sportback Occupant Protection, Infotainment and Air Conditioning, order number: A10.5S00.77.20

All rights reserved.
Technical specifications are subject to change.

Copyright
AUDI AG
I/VK-35
service.training@audi.de

AUDI AG
D-85045 Ingolstadt
Technical status 07/10

Printed in Germany
A10.5S00.74.20