Foreword

Congratulations on choosing a SUBARU vehicle. This Owner's Manual has all the information necessary to keep your SUBARU in excellent condition and to properly maintain the emission control system for minimizing emission pollutants. We urge you to read this manual carefully so that you may understand your vehicle and its operation. For information not found in this Owner's Manual, such as details concerning repairs or adjustments, please contact the SUBARU dealer from whom you purchased your SUBARU or the nearest SUBARU dealer.

The information, specifications and illustrations found in this manual are those in effect at the time of printing. SUBARU CORPORATION reserves the right to change specifications and designs at any time without prior notice and without incurring any obligation to make the same or similar changes on vehicles previously sold. This Owner's Manual applies to all models and covers all equipment, including factory installed options. Some explanations, therefore may be for equipment not installed in your vehicle.

Please leave this manual in the vehicle at the time of resale. The next owner will need the information found herein.

SUBARU CORPORATION, TOKYO, JAPAN

SUBARU is a registered trademark of SUBARU CORPORATION.

© Copyright 2017 SUBARU CORPORATION

This manual describes the following vehicle types.

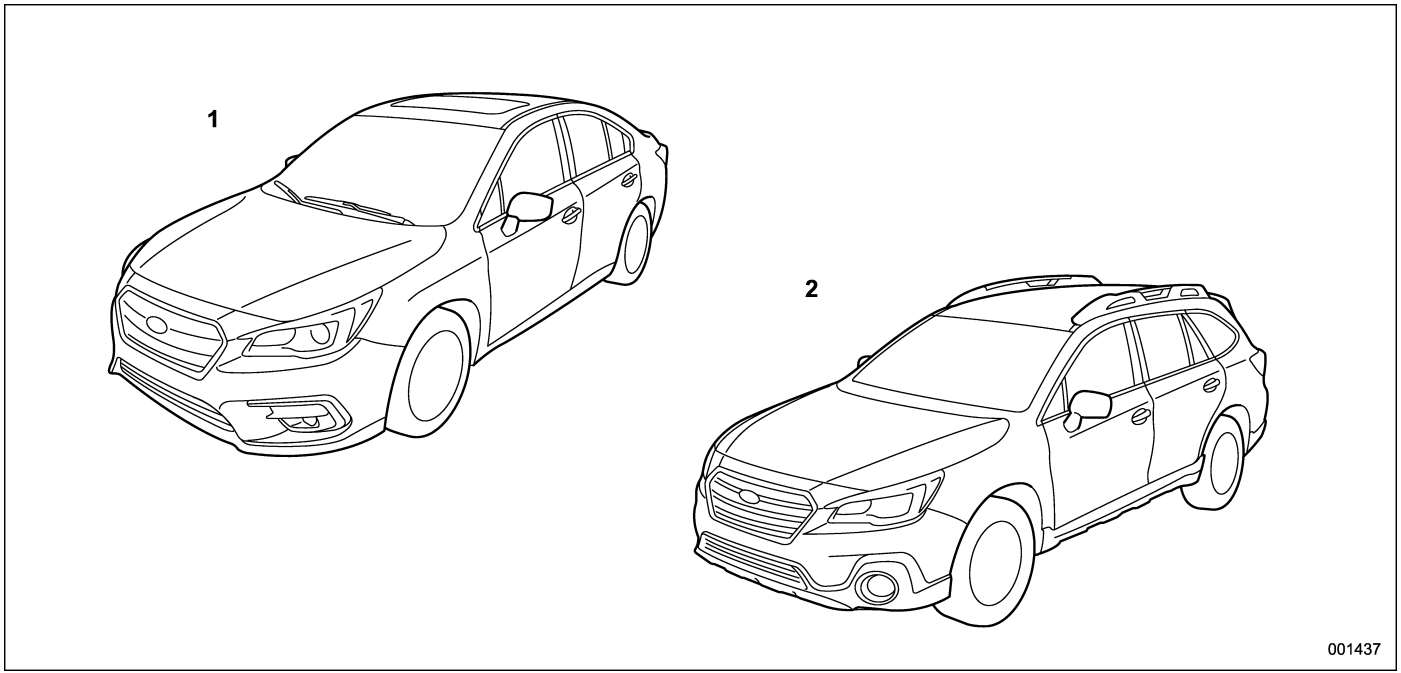

1) Legacy
2) Outback

Warranties

■ Warranties for U.S.A.

SUBARU vehicles distributed by Subaru of America, Inc. and sold at retail by an authorized SUBARU dealer in the United States come with the following warranties:

- **SUBARU Limited Warranties**
- **Federal Emission Control Systems Warranties**
- **California Emissions Control Systems Warranties**

All warranty information, including applicability, details of coverage and exclusions, is in the “Warranty and Maintenance Booklet”. Read these warranties carefully.

■ Warranties for Canada

SUBARU vehicles distributed by Subaru Canada, Inc. and sold at retail by an authorized SUBARU dealer in Canada come with the following warranties:

- **SUBARU Limited Warranty**
- **Emission Control System Warranty**

All warranty information, including applicability, details of coverage and exclusions, is in the “Warranty and Service Booklet”. Read these warranties carefully.

■ Warranties except for U.S.A. and Canada

All warranty information, including details of coverage and exclusions, is in the “Warranty and Maintenance Booklet”. Read these warranties carefully.

How to use this Owner’s Manual

■ Using your Owner’s Manual

Before you operate your vehicle, carefully read this manual. To protect yourself and extend the service life of your vehicle, follow the instructions in this manual. Failure to observe these instructions may result in serious injury and damage to your vehicle.

This manual is composed of fourteen chapters. Each chapter begins with a brief table of contents, so you can usually tell at a glance if that chapter contains the information you want.

Chapter 1: Seat, seatbelt and SRS airbags

This chapter informs you how to use the seat and seatbelt and contains precautions for the SRS airbags.

Chapter 2: Keys and doors

This chapter informs you how to operate the keys, locks and windows.

Chapter 3: Instruments and controls

This chapter informs you about the operation of instrument panel indicators and how to use the instruments and other switches.

– CONTINUED –

Chapter 4: Climate control

This chapter informs you how to operate the climate control.

Chapter 5: Audio

This chapter informs you about your audio system.

Chapter 6: Interior equipment

This chapter informs you how to operate interior equipment.

Chapter 7: Starting and operating

This chapter informs you how to start and operate your SUBARU.

Chapter 8: Driving tips

This chapter informs you how to drive your SUBARU in various conditions and explains some safety tips on driving.

Chapter 9: In case of emergency

This chapter informs you what to do if you have a problem, such as a flat tire or engine overheating.

Chapter 10: Appearance care

This chapter informs you how to keep your SUBARU looking good.

Chapter 11: Maintenance and service

This chapter informs you when you need to take your SUBARU to the dealer for scheduled maintenance and informs you how to keep your SUBARU running properly.

Chapter 12: Specifications

This chapter informs you about the dimensions and capacities of your SUBARU.

Chapter 13: Consumer information and Reporting safety defects

This chapter informs you about Tire information, Uniform tire quality grading standards and Reporting safety defects.

Chapter 14: Index

This is an alphabetical listing of all that's in this manual. You can use it to quickly find something you want to read.

For models with EyeSight system:

For details about the EyeSight system, refer to the Owner's Manual supplement for the EyeSight system.

■ Safety warnings

You will find a number of WARNINGs, CAUTIONs and NOTEs in this manual.

These safety warnings alert you to potential hazards that could result in injury to you or others.

Please read these safety warnings as well as all other portions of this manual carefully in order to gain a better understanding of how to use your SUBARU vehicle safely.

⚠ WARNING

A WARNING indicates a situation in which serious injury or death could result if the warning is ignored.

⚠ CAUTION

A CAUTION indicates a situation in which injury or damage to your vehicle, or both, could result if the caution is ignored.

NOTE

A NOTE gives information or suggestions how to make better use of your vehicle.

■ Safety symbol

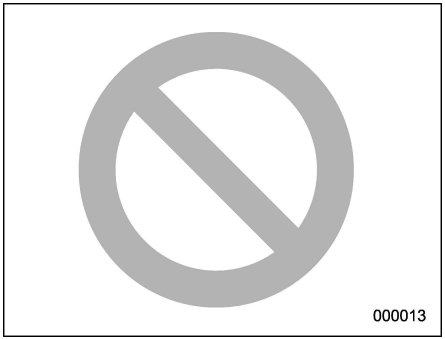

You will find a circle with a slash through it in this manual. This symbol means “Do not”, “Do not do this”, or “Do not let this happen”, depending upon the context.

■ Abbreviation list

You may find several abbreviations in this manual. The meanings of the abbreviations are shown in the following list.

Abbreviation	Meaning
A/C	Air conditioner
ABS	Anti-lock brake system
AKI	Anti knock index
ALR	Automatic locking retractor
ALR/ELR	Automatic locking retractor/ Emergency locking retractor
AWD	All-wheel drive
BSD	Blind Spot Detection
CVT	Continuously variable transmission
DRL	Daytime running light
EBD	Electronic brake force distribution
ELR	Emergency locking retractor
GAW	Gross axle weight
GAWR	Gross axle weight rating
GPS	Global positioning system
GVW	Gross vehicle weight
GVWR	Gross vehicle weight rating
INT	Intermittent

Abbreviation	Meaning
LATCH	Lower anchors and tethers for children
LCA	Lane Change Assist
LED	Light emitting diode
MIL	Malfunction indicator light
MMT	Methylcyclopentadienyl manganese tricarbonyl
OBD	On-board diagnostics
RAB	Reverse Automatic Braking
RCTA	Rear Cross Traffic Alert
RON	Research octane number
SRH	Steering Responsive Headlight
SRS	Supplemental restraint system
TIN	Tire identification number
TPMS	Tire pressure monitoring system

Vehicle symbols

There are some of the symbols you may see on your vehicle.

For warning and indicator lights, refer to “Warning and indicator lights” ☞24.

Mark	Name
	WARNING
	CAUTION
	Read these instructions carefully
	Wear eye protection
	Battery fluid contains sulfuric acid
	Keep children away
	Keep flames away
	Prevent explosions

Safety precautions when driving

■ Seatbelt and SRS airbag

⚠ WARNING

- **All persons in the vehicle should fasten their seatbelts BEFORE the vehicle starts to move. Otherwise, the possibility of serious injury becomes greater in the event of a sudden stop or accident.**
- **To obtain maximum protection in the event of an accident, the driver and all passengers must always wear seatbelts when in the vehicle. The SRS (Supplemental Restraint System) airbag does not do away with the need to fasten seatbelts. In combination with the seatbelts, it offers the best combined protection in case of a serious accident.**

  Not wearing a seatbelt increases the chance of severe injury or death in a crash even when the vehicle has the SRS airbag.
- **The SRS airbags deploy with considerable speed and force. Occupants who are out of proper position when the SRS airbag deploys could suffer very serious injuries. Because the SRS airbag needs enough space for deployment, the driver should always sit upright and well back in the seat as far from the steering wheel as practical while still maintaining full vehicle control and the front passenger should move the seat as far back as possible and sit upright and well back in the seat.**

For instructions and precautions, carefully read the following sections.

- For the seatbelt system, refer to “Seatbelts” ☞1-16.
- For the SRS airbag system, refer to “*SRS airbag (Supplemental Restraint System airbag)” ☞1-41.

■ Child safety

⚠ WARNING

- **Never hold a child on your lap or in your arms while the vehicle is moving. The passenger cannot protect the child from injury in a collision, because the child will be caught between the passenger and objects inside the vehicle.**
- **While riding in the vehicle, infants and small children should always be placed in the REAR seat in an infant or child restraint system which is appropriate for the child's age, height and weight. If a child is too big for a child restraint system, the child should sit in the REAR seat and be restrained using the seatbelts. According to accident statistics, children are safer when properly restrained in the rear seating positions than in the front seating positions. Never allow a child to stand up or kneel on the seat.**
- **Put children in the REAR seat properly restrained at all times in a child restraint device or in a seatbelt. The SRS airbag deploys with considerable speed and force and can injure or even kill children, especially if they are not restrained or improperly restrained. Because children are lighter and weaker than adults, their risk of being injured from deployment is greater.**
- **NEVER INSTALL A REARWARD FACING CHILD SAFETY SEAT IN THE FRONT SEAT. DOING SO RISKS SERIOUS INJURY OR DEATH TO THE CHILD BY PLACING THE CHILD'S HEAD TOO CLOSE TO THE SRS AIRBAG.**
- **Always turn the child safety locks to the "LOCK" position whenever a child rides in the rear seat. Serious injury could result if a child accidentally opened the door and fell out. Refer to "Child safety locks" ☞2-34.**
- **Always lock the passengers' windows using the lock switch when children are riding in the vehicle. Failure to follow this procedure could result in injury to a child operating the power window. Refer to "Windows" ☞2-35.**
- **Never leave unattended children, adults or animals in the vehicle. They could accidentally injure themselves or others through inadvertent operation of the vehicle. Also, on hot or sunny days, the temperature in a closed vehicle could quickly become high enough to cause severe or possibly fatal injuries.**
- **Help prevent children, adults or animals from locking themselves in the trunk. On hot or sunny days, the temperature in the trunk could quickly become high enough to cause death or serious heat-related injuries including brain damage to anyone locked inside, particularly for small children.**
- **When leaving the vehicle, close all windows and lock all doors. Also make certain that the trunk is closed.**

For instructions and precautions, carefully read the following sections.

- For the seatbelt system, refer to "Seatbelts" ☞1-16.
- For the child restraint system, refer to "Child restraint systems" ☞1-27.
- For the SRS airbag system, refer to "*SRS airbag (Supplemental Restraint

– CONTINUED –

System airbag)” ☞1-41.

■ Engine exhaust gas (carbon monoxide)

⚠ WARNING

- **Never inhale engine exhaust gas. Engine exhaust gas contains carbon monoxide, a colorless and odorless gas which is dangerous, or even lethal, if inhaled.**
- **Always properly maintain the engine exhaust system to prevent engine exhaust gas from entering the vehicle.**
- **Never run the engine in a closed space, such as a garage, except for the brief time needed to drive the vehicle in or out of it.**
- **Avoid remaining in a parked vehicle for a long time while the engine is running. If that is unavoidable, then use the ventilation fan to force fresh air into the vehicle.**
- **Always keep the front ventilator inlet grille free from snow, leaves or other obstructions to ensure that the ventilation system always works properly.**
- **If at any time you suspect that exhaust fumes are entering the vehicle, have the problem checked and corrected as soon as possible. If you must drive under these conditions, drive only with all windows fully open.**
- **Keep the trunk lid or rear gate closed while driving to prevent exhaust gas from entering the vehicle.**

■ Drinking and driving

⚠ WARNING

Drinking and then driving is very dangerous. Alcohol in the bloodstream delays your reaction and impairs your perception, judgment and attentiveness. If you drive after drinking – even if you drink just a little – it will increase the risk of being involved in a serious or fatal accident, injuring or killing yourself, your passengers and others. In addition, if you are injured in the accident, alcohol may increase the severity of that injury.

Please don’t drink and drive.

Drunken driving is one of the most frequent causes of accidents. Since alcohol affects all people differently, you may have consumed too much alcohol to drive safely even if the level of alcohol in your blood is below the legal limit. The safest thing you can do is never drink and drive. However if you have no choice but to drive, stop drinking and sober up completely before getting behind the wheel.

■ Drugs and driving

⚠ WARNING

There are some drugs (over the counter and prescription) that can delay your reaction time and impair your perception, judgment and attentiveness. If you drive after taking them, it may increase your, your passengers’ and other persons’ risk of being involved in a serious or fatal accident.

If you are taking any drugs, check with your doctor or pharmacist or read the literature that accompanies the medication to determine if the drug you are taking can impair your driving ability. Do not drive

after taking any medications that can make you drowsy or otherwise affect your ability to safely operate a motor vehicle. If you have a medical condition that requires you to take drugs, please consult with your doctor.

Never drive if you are under the influence of any illicit mind-altering drugs. For your own health and well-being, we urge you not to take illegal drugs in the first place and to seek treatment if you are addicted to those drugs.

Driving when tired or sleepy

WARNING

When you are tired or sleepy, your reaction will be delayed and your perception, judgment and attentiveness will be impaired. If you drive when tired or sleepy, your, your passengers' and other persons' chances of being involved in a serious accident may increase.

Please do not continue to drive but instead find a safe place to rest if you are tired or sleepy. On long trips, you should make periodic rest stops to refresh yourself before continuing on your journey. When possible, you should share the driving with others.

Car phone/cell phone and driving

CAUTION

Do not use a car phone/cell phone while driving; it may distract your attention from driving and can lead to an accident. If you use a car phone/cell phone, pull off the road and park in a safe place before using your phone. In some States/Provinces, only hands-free phones may legally be used while driving.

Modification of your vehicle

CAUTION

Your vehicle should not be modified other than with genuine SUBARU parts and accessories. Other types of modifications could affect its performance, safety or durability, and may even violate governmental regulations. In addition, damage or performance problems resulting from modification may not be covered under warranties.

Driving with pets

Unrestrained pets can interfere with your driving and distract your attention from driving. In a collision or sudden stop, unrestrained pets or cages can be thrown around inside the vehicle and hurt you or your passengers. Besides, the pets can be hurt under these situations. It is also for their own safety that pets should be properly restrained in your vehicle. Restrain a pet with a special traveling harness which can be secured to the rear seat with a seatbelt or use a pet carrier which can be secured to the rear seat by routing a seatbelt through the carrier's handle. Never restrain pets or pet carriers in the

– CONTINUED –

front passenger's seat. For further information, consult your veterinarian, local animal protection society or pet shop.

■ Tire pressures

⚠ WARNING

Driving at high speeds with excessively low tire pressures can cause the tires to deform severely and to rapidly become hot. A sharp increase in temperature could cause tread separation, and destruction of the tires. The resulting loss of vehicle control could lead to an accident.

Check and, if necessary, adjust the pressure of each tire (including the spare) at least once a month and before any long journey.

Check the tire pressure when the tires are cold. Use a pressure gauge to adjust the tire pressures to the values shown on the tire placard. For detailed information, refer to "Tires and wheels" ☞11-22.

■ Attaching accessories

⚠ WARNING

- **Do not attach any accessories, labels or stickers (other than properly placed inspection stickers) to the windshield. Such items may obstruct your view.**
- **If it is necessary to attach an accessory (such as an electronic toll collection (ETC) device or security pass) to the windshield, consult your SUBARU dealer for details on the proper location.**

General information

■ California proposition 65 warning

⚠ WARNING

Engine exhaust, some of its constituents, and certain vehicle components contain or emit chemicals known to the State of California to cause cancer and birth defects or other reproductive harm. In addition, certain fluids in vehicles and certain components of product wear contain or emit chemicals known to the State of California to cause cancer and birth defects or other reproductive harm.

■ California Perchlorate Advisory

Certain vehicle components such as airbag modules, seatbelt pretensioners and keyless entry transmitter batteries may contain perchlorate material. Special handling may apply for service or vehicle end of life disposal. See www.dtsc.ca.gov/hazardouswaste/perchlorate.

■ Noise from under the vehicle

NOTE

You may hear a noise from under the vehicle approximately 5 to 10 hours after the engine is turned off. However, this does not indicate a malfunction. This noise is caused by the operation of the fuel evaporation leakage checking system and the operation is normal. The noise will stop after approximately 15 minutes.

■ Event data recorder

This vehicle is equipped with an event data recorder (EDR). The main purpose of an EDR is to record, in certain crash or near crash-like situations, such as an air bag deployment or hitting a road obstacle, data that will assist in understanding how a vehicle's systems performed. The EDR is designed to record data related to vehicle dynamics and safety systems for a short period of time, typically 30 seconds or less. The EDR in this vehicle is designed to record such data as:

- How various systems in your vehicle were operating;
- Whether or not the driver and passenger safety belts were buckled/fastened;
- How far (if at all) the driver was depressing the accelerator and/or brake pedal; and,
- How fast the vehicle was traveling.

These data can help provide a better understanding of the circumstances in which crashes and injuries occur. NOTE: EDR data are recorded by your vehicle only if a non-trivial crash situation occurs; no data are recorded by the EDR under normal driving conditions and no personal data (e.g., name, gender, age, and crash location) are recorded. However, other parties, such as law enforcement, could combine the EDR data with the type of personally identifying data routinely acquired during a crash investigation.

To read data recorded by an EDR, special equipment is required, and access to the vehicle or the EDR is needed. In addition to the vehicle manufacturer, other parties, such as law enforcement, that have the special equipment, can read the information if they have access to the vehicle or the EDR.

Table of contents

Seat, seatbelt and SRS airbags	*1*
Keys and doors	*2*
Instruments and controls	*3*
Climate control	*4*
Audio	*5*
Interior equipment	*6*
Starting and operating	*7*
Driving tips	*8*
In case of emergency	*9*
Appearance care	*10*
Maintenance and service	*11*
Specifications	*12*
Consumer information and Reporting safety defects	*13*
Index	*14*

Illustrated index

■ Exterior

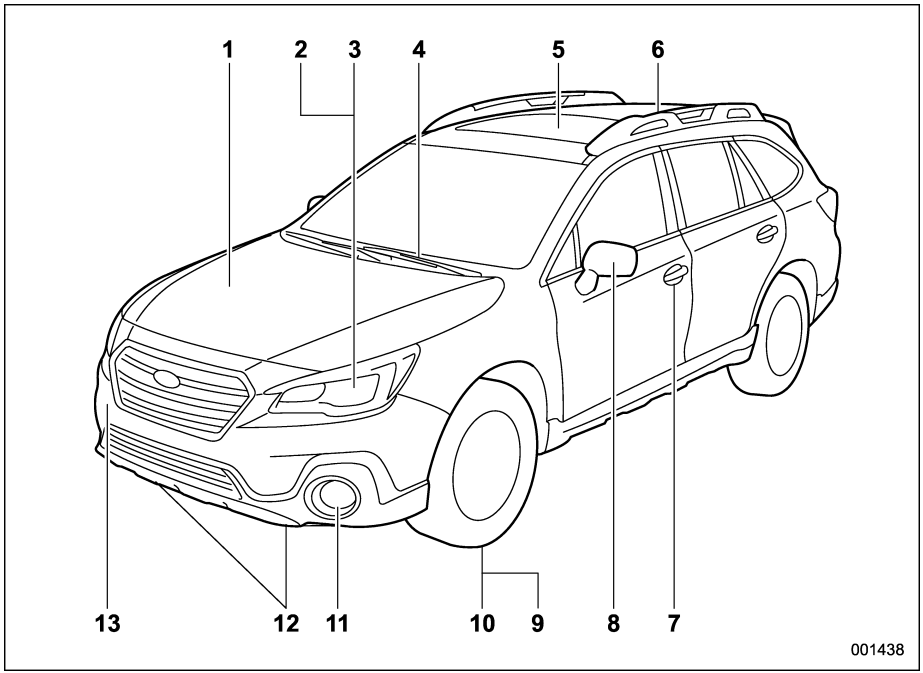

1) Engine hood (page 11-7)
2) Headlight (page 3-46)
3) Bulb replacement (page 11-38)
4) Front wiper (page 3-59)
5) Moonroof (page 2-48)
6) Roof rail with integrated crossbars and rope hook (page 8-15)
7) Door locks (page 2-6)
8) Outside mirrors (page 3-81)
9) Tire pressure (page 11-25)
10) Flat tires (page 9-5)
11) Fog light (page 3-57)
12) Tie-down hooks (page 9-15)
13) Towing hook (Outback) (page 9-15)

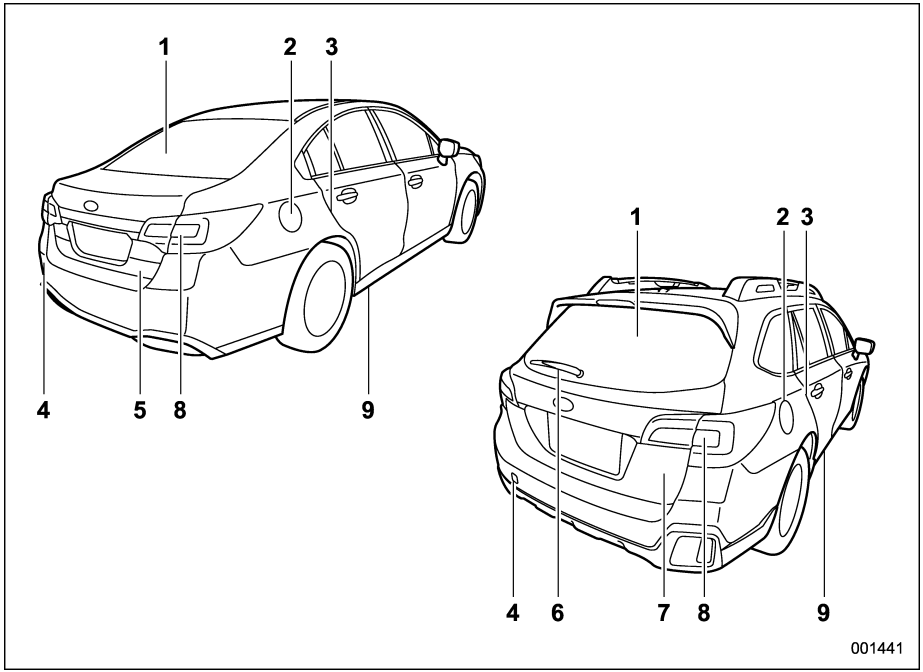

1) Rear window defogger (page 3-61)
2) Fuel filler lid and cap (page 7-4)
3) Child safety locks (page 2-34)
4) Towing hook (page 9-15)
5) Trunk lid (page 2-38)
6) Rear wiper (page 3-60)
7) Rear gate (page 2-41)
8) Bulb replacement (page 11-41)
9) Tie-down holes (page 9-15)

– CONTINUED –

■ Interior

▼ Passenger compartment area

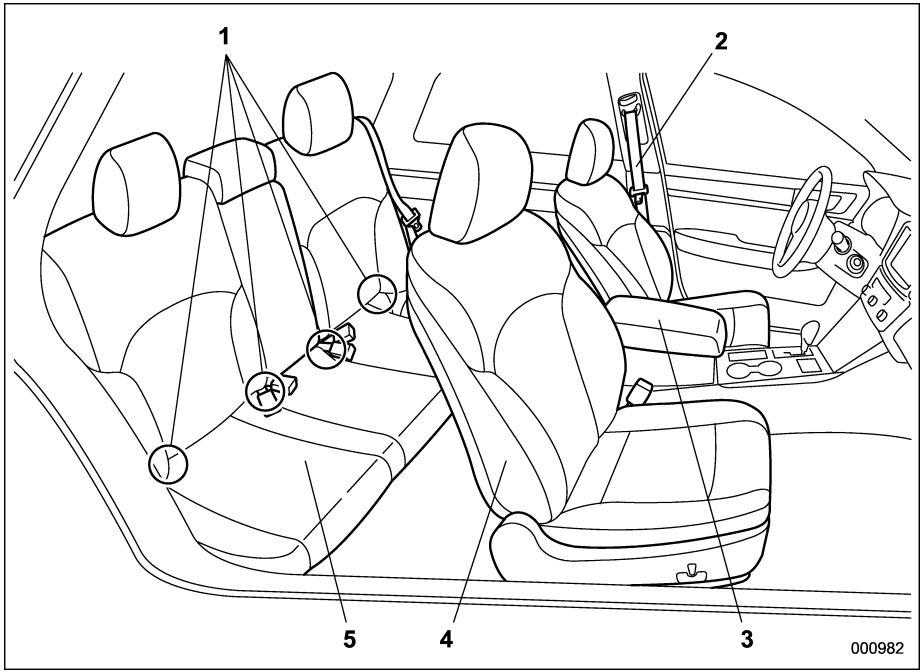

1) Lower anchorages for child restraint system (page 1-36)
2) Seatbelt (page 1-16)
3) Center console (page 6-6)
4) Front seat (page 1-2)
5) Rear seat (page 1-11)

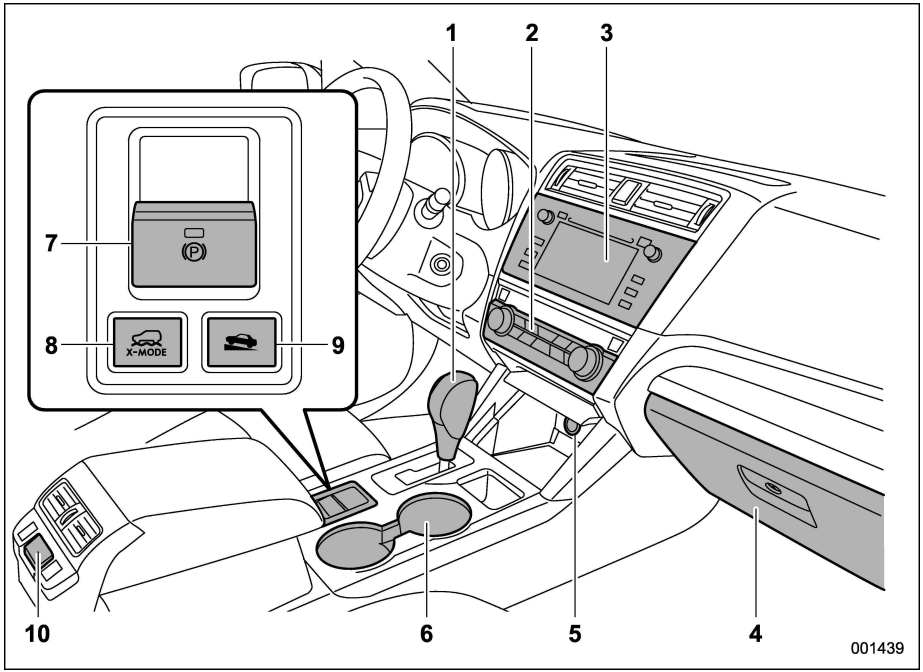

1) Select lever (page 7-23)
2) Climate control (page 4-1)
3) Audio*/Navigation system*
4) Glove box (page 6-6)
5) Accessory power outlet (page 6-9)
6) Cup holder (page 6-8)
7) Electronic parking brake switch (page 7-40)
8) X-mode switch (page 7-36)
9) Hill Holder switch (page 7-43)
10) USB power supply (page 6-11)

*: For details about how to use the audio and navigation system (if equipped), refer to the separate navigation/audio Owner's Manual.

– CONTINUED –

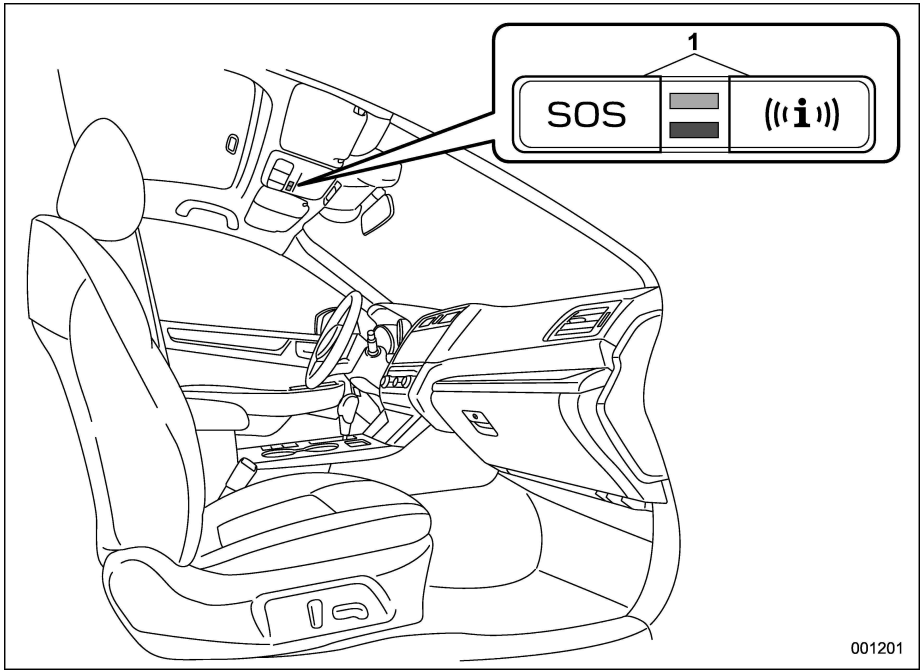

1) Buttons for SUBARU STARLINK

NOTE

For U.S.-spec. models with SUBARU STARLINK: Refer to the Owner's Manual supplement for SUBARU STARLINK.

■ Instrument panel

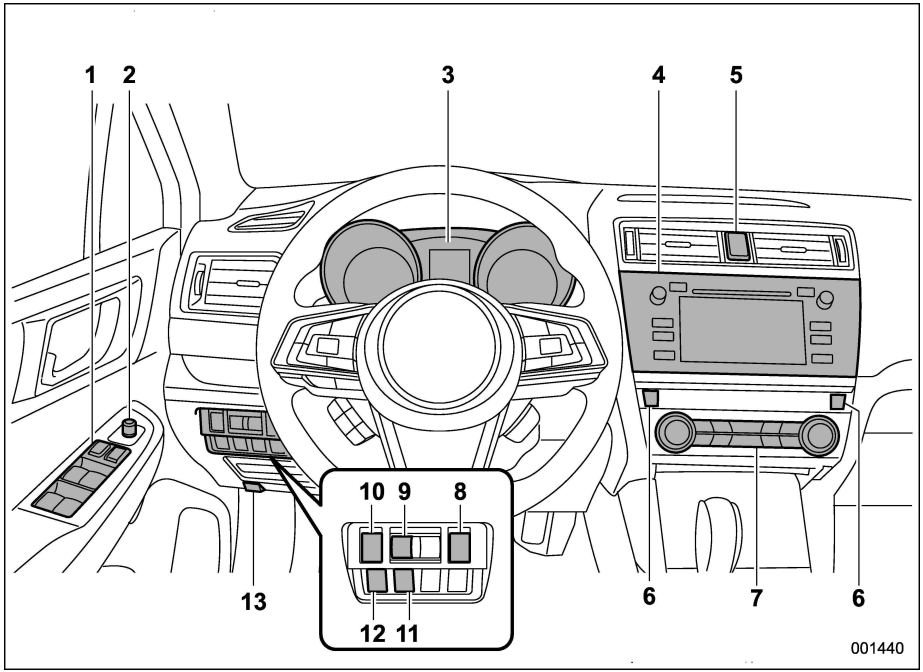

1) Power windows (page 2-35)
2) Remote control mirror switch (page 3-82)
3) Combination meter (page 3-7)
4) Audio*/Navigation system*
5) Hazard warning flasher switch (page 3-7)
6) Seat heater switch (page 1-9)
7) Climate control (page 4-1)
8) Memory switch for power rear gate (page 2-45)
9) Illumination brightness control dial (page 3-56)
10) Power rear gate switch (page 2-42)/ Trunk lid opener switch (page 2-39)
11) BSD/RCTA OFF switch (page 7-55)
12) Vehicle Dynamics Control OFF switch (page 7-34)
13) Hood lock release knob (page 11-7)

*: For details about how to use the audio and navigation system (if equipped), refer to the separate navigation/audio Owner's Manual.

NOTE

For details about the EyeSight system, refer to the Owner's Manual supplement for the EyeSight system.

– CONTINUED –

■ Steering wheel

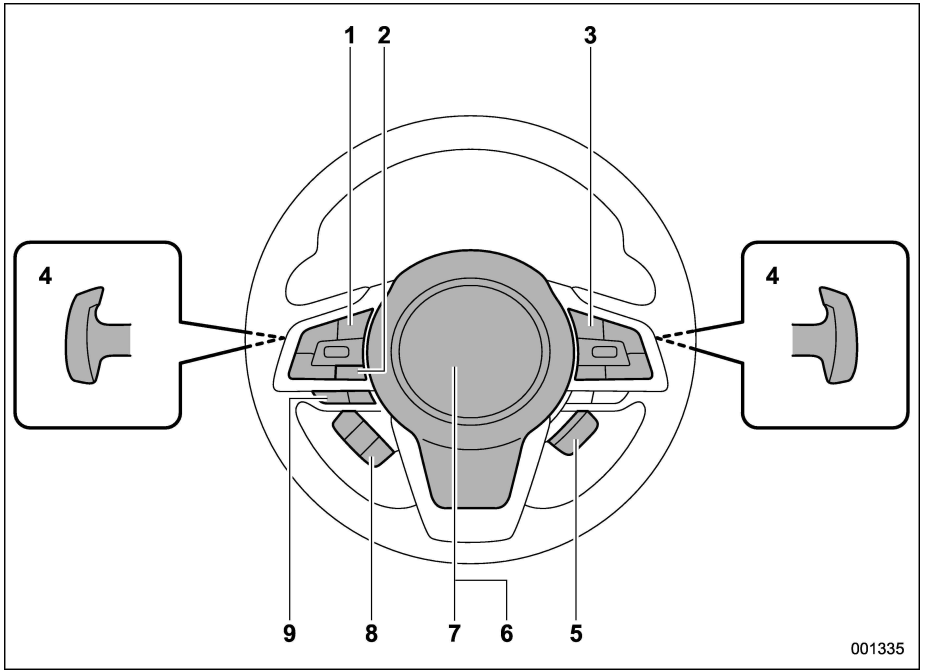

1) Audio control switches*
2) Talk switch for voice command system*
3) Cruise control (page 7-45)
4) Shift paddle (page 7-27)
5) Heated Steering Wheel switch (page 3-83)
6) SRS airbag (page 1-41)
7) Horn (page 3-83)
8) Control switches for multi-information display (page 3-34)
9) Hands-free phone switches*

*: For details about how to use the switches, refer to the separate navigation/audio Owner's Manual.

■ Light control and wiper control levers/switches

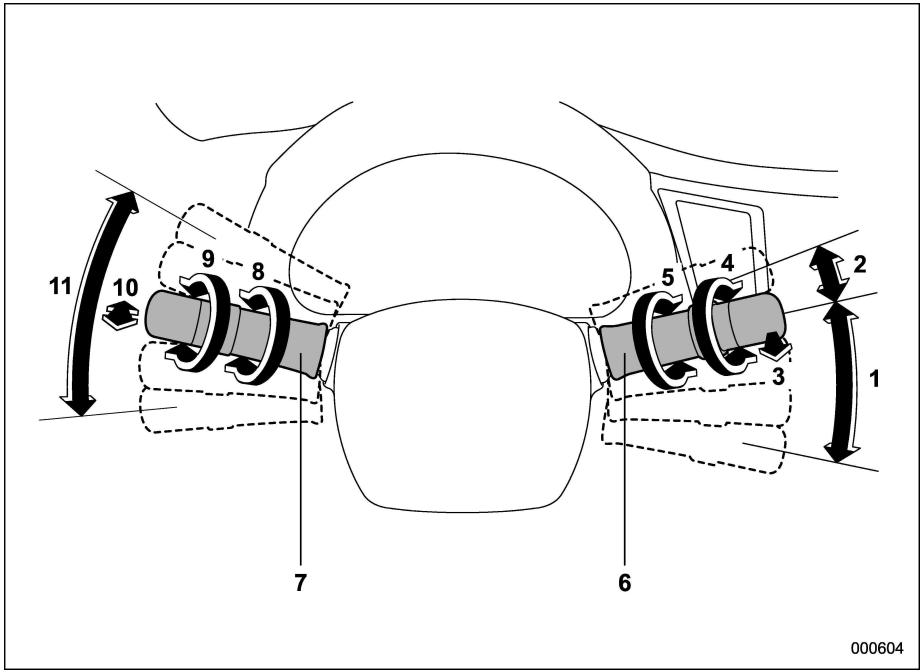

1) Windshield wiper (page 3-57)
2) Mist (page 3-59)
3) Windshield washer (page 3-59)
4) Rear window wiper and washer switch (page 3-60)
5) Wiper intermittent time control switch (page 3-59)
6) Wiper control lever (page 3-59)
7) Light control switch (page 3-45)
8) Front fog light switch (page 3-57)
9) Headlight ON/OFF/AUTO (page 3-46)
10) Headlight flasher High/Low beam change (page 3-48)
11) Turn signal lever (page 3-55)

– CONTINUED –

■ Combination meter

▼ U.S. spec. models (type A)

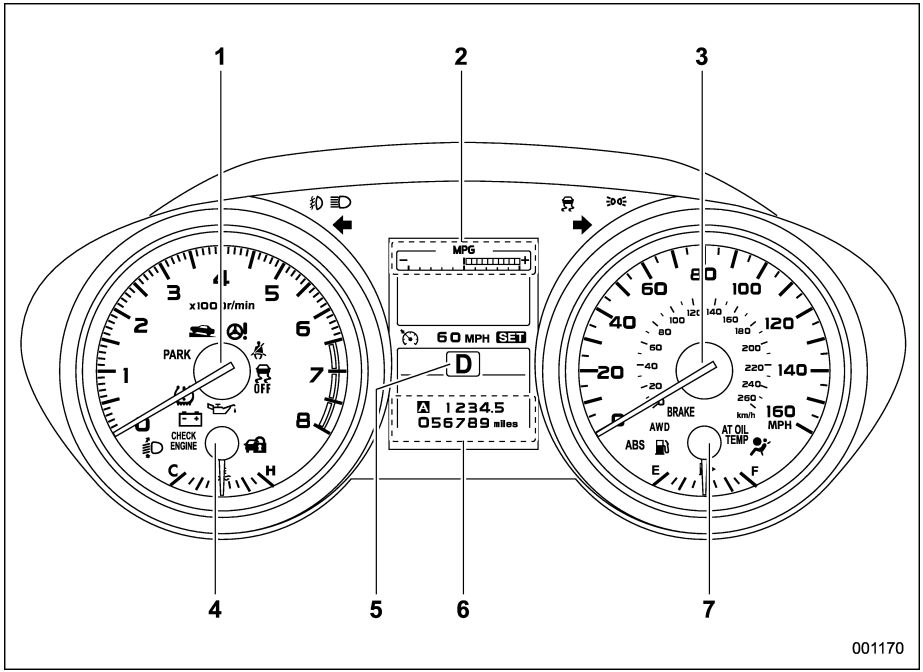

1) Tachometer (page 3-9)
2) ECO gauge (page 3-11)
3) Speedometer (page 3-8)
4) Temperature gauge (page 3-11)
5) Select lever/gear position indicator (page 3-30)
6) Trip meter and odometer (page 3-8)
7) Fuel gauge (page 3-10)

▼ **U.S. spec. models (type B)**

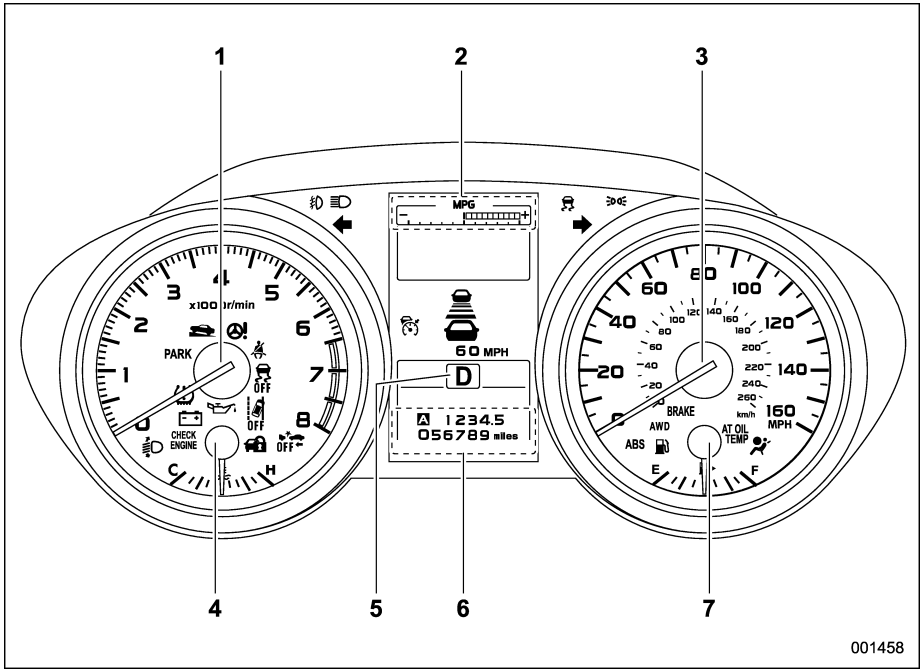

1) Tachometer (page 3-9)
2) ECO gauge (page 3-11)
3) Speedometer (page 3-8)
4) Temperature gauge (page 3-11)
5) Select lever/gear position indicator (page 3-30)
6) Trip meter and odometer (page 3-8)
7) Fuel gauge (page 3-10)

– CONTINUED –

▼ **Except U.S. spec. models (type A)**

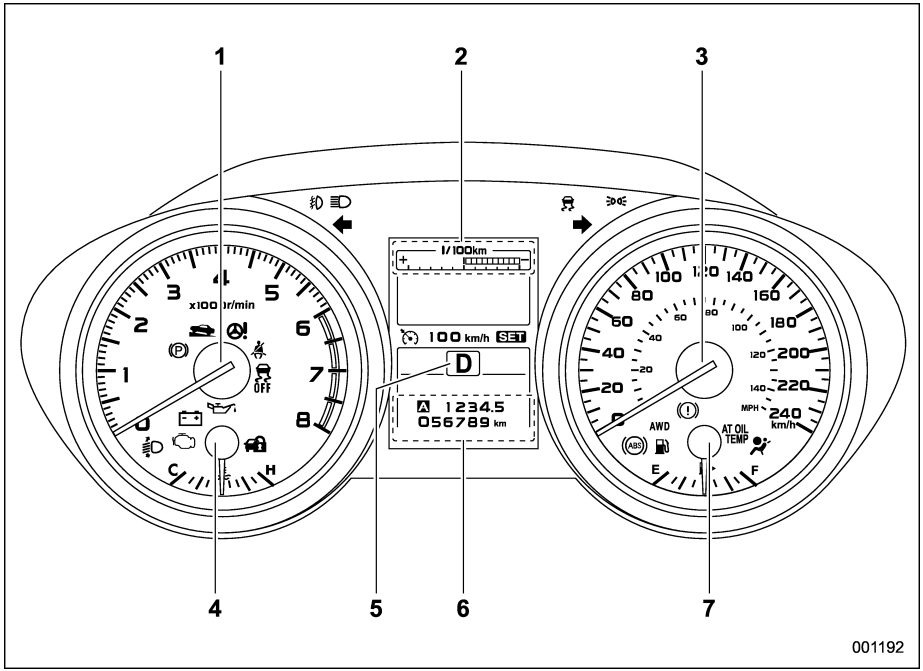

1) Tachometer (page 3-9)
2) ECO gauge (page 3-11)
3) Speedometer (page 3-8)
4) Temperature gauge (page 3-11)
5) Select lever/gear position indicator (page 3-30)
6) Trip meter and odometer (page 3-8)
7) Fuel gauge (page 3-10)

▼ **Except U.S. spec. models (type B)**

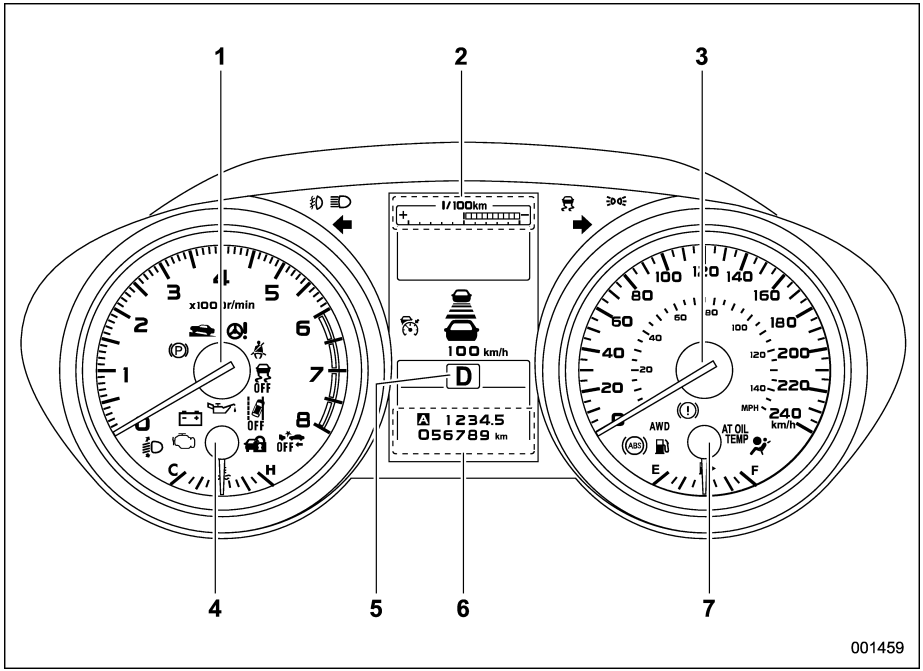

1) Tachometer (page 3-9)
2) ECO gauge (page 3-11)
3) Speedometer (page 3-8)
4) Temperature gauge (page 3-11)
5) Select lever/gear position indicator (page 3-30)
6) Trip meter and odometer (page 3-8)
7) Fuel gauge (page 3-10)

– CONTINUED –

■ Warning and indicator lights

Mark	Name	Page
	Seatbelt warning light	3-12
2	Front passenger's seatbelt warning light	3-12
	SRS airbag system warning light	3-14
CHECK ENGINE /	CHECK ENGINE warning light/Malfunction indicator light	3-15
	Charge warning light	3-15
	Oil pressure warning light	3-15
	Engine low oil level warning indicator	3-16
AT OIL TEMP	AT OIL TEMP warning light	3-16
ABS / (ABS)	ABS warning light	3-18
BRAKE / (!)	Brake system warning light	3-18

Mark	Name	Page
PARK / (P)	Electronic parking brake indicator light	3-20
	Hill Holder indicator light	3-21
	Door open indicator	3-21
	Low fuel warning light	3-21
AWD	All-Wheel Drive warning light	3-22
	Power steering warning light	3-22
	Vehicle Dynamics Control warning light/Vehicle Dynamics Control operation indicator light	3-23
OFF	Vehicle Dynamics Control OFF indicator light	3-24
	Access key warning indicator (if equipped)	3-24
	Security indicator light	3-29
	Turn signal indicator lights	3-30

Mark	Name	Page
	High beam indicator light	3-30
A	High beam assist indicator (green) (if equipped)	3-30
A	High beam assist warning indicator (yellow) (if equipped)	3-30
	Automatic headlight beam leveler warning light (if equipped)	3-31
SRH OFF	Steering Responsive Headlight warning light/ Steering Responsive Headlight OFF indicator light (if equipped)	3-54
	Front fog light indicator light (if equipped)	3-31
	Cruise control indicator	3-30
SET	Cruise control set indicator	3-31
	X-mode indicator (if equipped)	3-31
	Hill descent control indicator (if equipped)	3-31
	Headlight indicator light	3-31

Mark	Name	Page
	Low tire pressure warning light (U.S. spec. models)	3-16
ON /	Front passenger's frontal airbag ON indicator light	3-14
OFF /	Front passenger's frontal airbag OFF indicator light	3-14
	Windshield washer fluid warning indicator	3-22
	BSD/RCTA warning indicator (if equipped)	3-31
OFF	BSD/RCTA OFF indicator (if equipped)	3-31
	Icy road surface warning indicator	3-32
RAB	RAB warning indicator (if equipped)	3-32
RAB OFF	RAB OFF indicator (if equipped)	3-32
P OFF	Sonar audible alarm OFF indicator (if equipped)	3-32

Function settings

A SUBARU dealer can change the settings of the functions shown in the following table to meet your personal requirements. Contact the nearest SUBARU dealer for details. Furthermore, some useful function settings are available using the multi information display. For details, refer to “Menu screens” ☞3-40.

Item	Function	Possible settings	Default setting	Page
Alarm system	Alarm system	Operation/Non-operation	Operation	2-30
	Monitoring start delay time (after closing doors)	0 seconds/30 seconds	30 seconds	2-30
	Impact sensor operation (only models with shock sensors (dealer option))	Operation/Non-operation	Non-operation	2-34
	Map light/Dome light/Cargo area light illumination	ON/OFF	OFF	2-29
Keyless access with push-button start system *1	Audible signal *2	ON/OFF	ON	2-19, 2-47, 3-44
	Audible signal volume *3	Level 1 to 7	Level 5	2-19, 3-24, 3-44
	Hazard warning flasher	ON/OFF	ON	2-19, 3-44
	Door unlock selection (driver’s door unlock)	Driver’s door only/All doors	Driver’s door only	2-18, 3-44
	Door unlock selection (rear gate unlock)	Rear gate only, All doors	Rear gate only	
	Trunk open without key (Legacy)	ON/OFF	ON	2-17
Remote keyless entry system	Audible signal *2	ON/OFF	ON	2-26, 2-27, 2-47, 3-44
	Audible signal volume *3	Level 1 to 7	Level 5	2-26, 2-27, 3-44
	Hazard warning flasher	ON/OFF	ON	2-26, 2-27, 3-44
Key lock-in prevention	Key lock-in prevention	Operation/Non-operation	Operation	2-9

Item	Function	Possible settings	Default setting	Page
Defogger and deicer system	Rear window defogger, outside mirror defogger and windshield wiper deicer	Operation for 15 minutes/ Continuous operation	Operation for 15 minutes	3-61, 3-44
Map light/Dome light/Cargo area light	Operation of map light/dome light/cargo area light OFF delay timer	OFF/10 seconds/20 seconds/ 30 seconds	30 seconds	6-4, 3-44
Battery drainage prevention function	Battery drainage prevention function	Operation/Non-operation	Operation	2-8
Auto on/off headlights	Sensitivity of the operation of the auto on/off headlights	Min/Low/Mid/Max	Mid	3-46, 3-45
Windshield wiper	Automatic headlight turn on function that is linked with wiper operation	Operation/Non-operation	Operation	3-46, 3-45
Auto dimmer cancel	Sensitivity of the operation of the auto dimmer cancel	OFF/Min/Low/Mid/Hi/Max	Mid	3-56
Welcome lighting function	Welcome lighting function (when approaching)	OFF/30 seconds/60 seconds/ 90 seconds	30 seconds	3-45, 3-47
	Welcome lighting function (when exiting)	OFF/30 seconds/60 seconds/ 90 seconds	30 seconds	
High beam assist function*1	High beam assist function	Operation/Non-operation	Operation	3-48
Reverse gear interlocked rear wiper	Reverse gear interlocked rear wiper operation	Operation/Non-operation	U.S.-spec. models: Non-operation Other models: Operation	3-60
One-touch lane changer	Operation of the one-touch lane changer	Operation/Non-operation	Operation	3-56
Auto Door Lock	Auto door lock function	OFF/Vehicle Speed/Shift Into PARK	Vehicle Speed	3-44
Auto Door Unlock	Auto door unlock function	OFF/Shift Out of PARK/Ignition OFF/Driver Door Open	Driver Door Open	

*1: If equipped
*2: This setting also works as the ON/OFF setting of the power rear gate buzzer for starting operation. However, you cannot change the warning buzzer

– CONTINUED –

setting for a detecting jam, etc.
*3: The audible signal volume cannot be set under level 5 for the warning chime.

Front seats 1-2
Manual seat (if equipped) 1-4
Power seat (if equipped) 1-5
Head restraint adjustment 1-8
Seat heater (if equipped) 1-9
Front seat heater 1-10
Rear seat heater (if equipped) 1-10
Rear seats 1-11
Reclining the seatback (Outback) 1-11
Folding down the rear seatback 1-12
Head restraint adjustment 1-14
Armrest 1-15
Seatbelts 1-16
Seatbelt safety tips 1-16
Emergency Locking Retractor (ELR) 1-17
Automatic Locking Retractor/Emergency Locking Retractor (ALR/ELR) 1-17
Seatbelt warning light and chime 1-17
Fastening the seatbelt 1-17
Seatbelt maintenance 1-24
Front seatbelt pretensioners 1-24
System monitors 1-26
System servicing 1-26
Precautions against vehicle modification 1-27
Child restraint systems 1-27
Where to place a child restraint system 1-28
Choosing a child restraint system 1-30
Installing child restraint systems with ALR/ELR seatbelt 1-30
Installing a booster seat 1-34
Installation of child restraint systems by use of lower and tether anchorages (LATCH) 1-36
Top tether anchorages 1-39
*SRS airbag (Supplemental Restraint System airbag) 1-41
General precautions regarding SRS airbag system 1-42
Components 1-48
SUBARU advanced frontal airbag system, SRS seat cushion airbag, SRS side airbag and SRS curtain airbag 1-51
System operation 1-56
SRS airbag system monitors 1-68
SRS airbag system servicing 1-69
Precautions against vehicle modification 1-70

Front seats

WARNING

- **Never adjust the seat while driving to avoid loss of vehicle control and personal injury.**
- **Before adjusting the seat, make sure the hands and feet of rear seat passengers or cargo are clear of the adjusting mechanism.**
- **After adjusting the seat, push it slightly to make sure it is securely locked. If the seat is not securely locked, it may move or the seatbelt may not operate properly.**
- **Do not put objects under the front seats. They may interfere with front seat locking and cause an accident.**
- **Seatbelts provide maximum restraint when the occupant sits well back and upright in the seat. To reduce the risk of sliding under the seatbelt in a collision, the front seatbacks should be always used in the upright position while the vehicle is running. If the front seatbacks are not used in the upright position in a collision, the risk of sliding under the lap belt and of the lap belt sliding up over the abdomen will increase, and both can result in serious internal injury or death.**
- **The SRS airbags deploy with considerable speed and force. Occupants who are not in the proper position when the SRS airbag deploys could suffer very serious injuries. Because the SRS airbag needs enough space for deployment, the driver should always sit upright and well back in the seat as far from the steering wheel as practical while still maintaining full vehicle control and the front passenger should move the seat as far back as possible and sit upright and well back in the seat.**

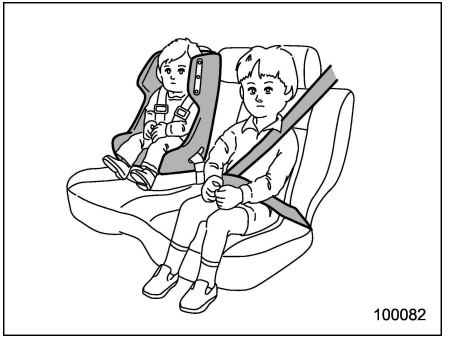

WARNING

Put children in the rear seat properly restrained at all times. The SRS airbag deploys with considerable speed and force and can injure or even kill children, especially if they are not restrained or improperly restrained. Because children are lighter and weaker than adults, their risk of being injured from deployment is greater. Consequently, we strongly recommend that ALL children (including those in child seats and those that have outgrown child restraint devices) sit in the REAR seat properly restrained at all times in a child restraint device or in a seatbelt, whichever is appropriate

for the child's age, height and weight.

Secure ALL types of child restraint devices (including forward facing child seats) in the REAR seats at all times.

NEVER INSTALL A REARWARD FACING CHILD SEAT IN THE FRONT SEAT. DOING SO RISKS SERIOUS INJURY OR DEATH TO THE CHILD BY PLACING THE CHILD'S HEAD TOO CLOSE TO THE SRS AIRBAG.

According to accident statistics, children are safer when properly restrained in the rear seating positions than in the front seating positions. For instructions and precautions concerning child restraint systems, refer to "Child restraint systems" ☞1-27.

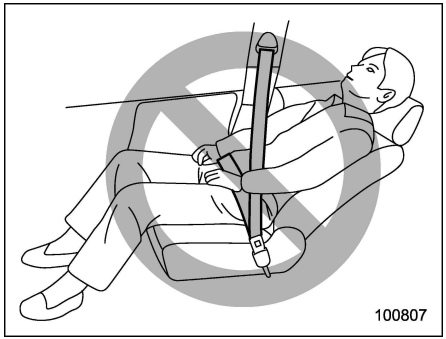

⚠ WARNING

To prevent the passenger from sliding under the seatbelt in the event of a collision, always put the seatback in the upright position while the vehicle is in motion. Also, do not place objects such as cushions between the passenger and the seatback. If you do so, the risk of sliding under the lap belt and of the lap belt sliding up over the abdomen will increase, and both can result in serious internal injury or death.

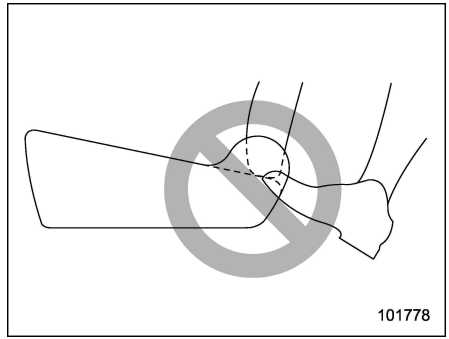

⚠ WARNING

Do not let rear passengers rest their feet between the front seatback and seat cushion. Doing so may lead to improper operation of the following systems and could result in serious injury.

- **Occupant detection system**
- **SRS side airbag**
- **SRS seat cushion airbag**
- **Front seat heater (if equipped)**
- **Power seat (if equipped)**

– CONTINUED –

■ Manual seat (if equipped)

▼ Forward and backward adjustment

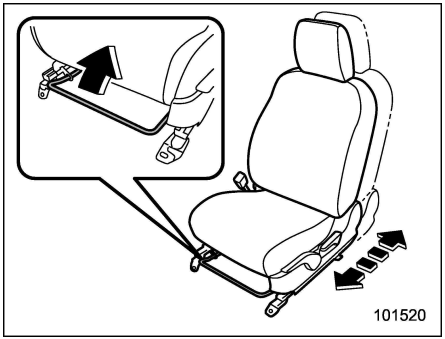

1. Sit in the seat to adjust.
2. Pull the lever upward, slide the seat to the desired position, and then release the lever.
3. Try to move the seat back and forth to make sure that it is securely locked into place.

▼ Reclining the seatback

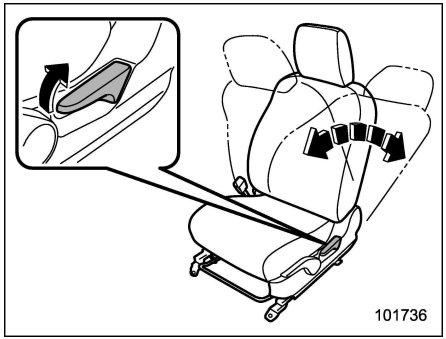

1. Pull up the reclining lever, adjust the seatback to the desired position, and then release the lever.
2. Make sure the seatback is securely locked into place.

The seatback placed in a reclined position can spring back upward with force when pulling up the lever. While operating the lever to return the seatback, hold the seatback lightly so that it may be raised back gradually.

▼ Seat cushion height adjustment (driver's seat)

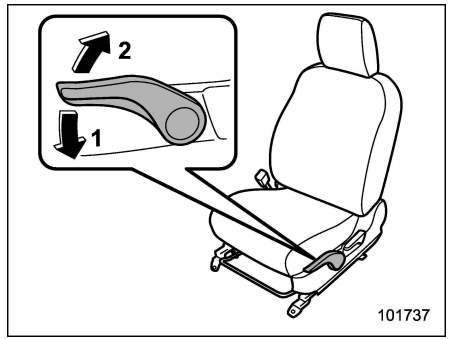

1) Push the lever down to lower the seat.
2) Pull the lever up to raise the seat.

You can adjust the height of the seat by moving the seat cushion adjustment lever up or down.

■ Power seat (if equipped)

▼ Driver's seat

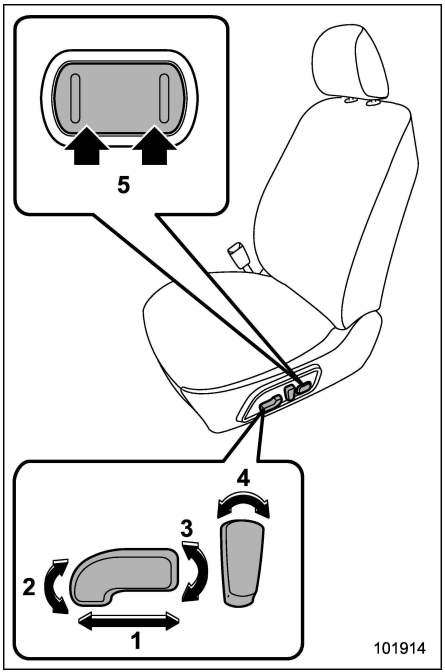

1) **Seat position forward/backward control switch**
To adjust the seat forward or backward, move the control switch forward or backward. During forward/backward adjustment of the seat, you cannot adjust the seat cushion angle or seat cushion height.
2) **Seat cushion angle control switch**
To adjust the seat cushion angle, pull up or push down the front end of the control switch.
3) **Seat height control switch**
To adjust the seat height, pull up or push down the rear end of the control switch.
4) **Seatback angle (reclining) control switch**
To adjust the angle of the seatback, move the control switch.
5) **Lumbar support control switch**
To increase lower back support, push the front side of the switch. To decrease lower back support, push the rear side of the switch.

▼ Front passenger's seat (if equipped)

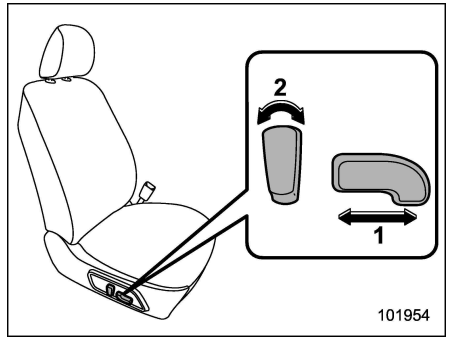

1) **Seat position forward/backward control switch**
To adjust the seat forward or backward, move the control switch forward or backward.
2) **Seatback angle (reclining) control switch**
To adjust the angle of the seatback, move the control switch.

– CONTINUED –

▼ **Memory function (driver's seat — if equipped)**

⚠ WARNING

- **To avoid loss of vehicle control or personal injury, never perform the following operations while driving.**
  - **Adjusting the seat**
  - **Retrieving the seat position**
- **Before adjusting the seat, make sure that cargo or the hands and feet of rear seat passengers are clear of the adjusting mechanism.**
- **Perform the seat position retrieval before driving. Be sure to confirm that the select lever is in the "P" position, and the parking brake is applied, when adjusting the seat position. Do not drive until the retrieval of the seat position is complete.**
- **When retrieving a registered seat position, make sure the hands, feet and possessions of rear seat passengers are clear of the seat adjusting mechanism.**
- **When any unusual conditions or malfunctions occur during the retrieval of the seat position, stop the retrieval of the seat position by performing any of the following procedures.**
  - **Operate any of the power seat switches**
  - **Press the "SET" button**
  - **Press button "1" or "2"**

Some of your desired seat positions can be registered. Register the seat position with button "1" or "2" or each of the key fobs and retrieve the seat position.

The following seat positions can be registered.

- Forward/backward position of the seat
- Angle of seatback
- Angle of seat cushion
- Height of seat

▽ **Registration of seat position with button "1" or "2"**

1. Adjust the seat position under the following conditions.
   - The parking brake is applied.
   - The select lever is in the "P" position.

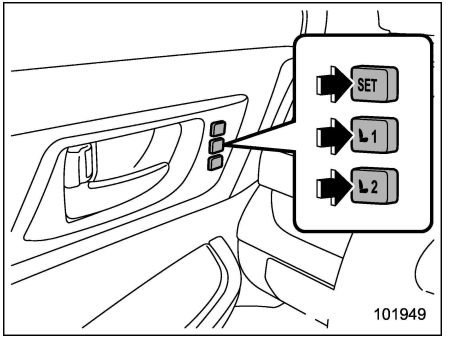

2. While pressing the "SET" button, press and hold the desired button "1" or "2".

A chirp sounds once, and the seat position is registered.

▽ **Registration of seat position with each key fob**

1. Adjust the seat position under the following conditions.
   - The parking brake is applied.
   - The ignition switch is in the "LOCK"/"OFF" position.
   - The select lever is in the "P" position.

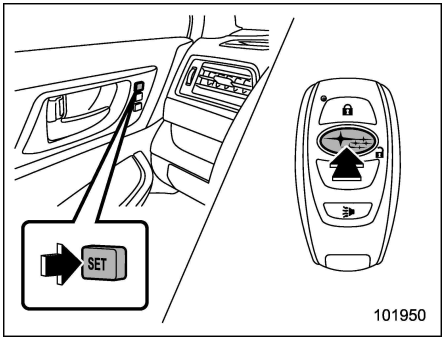

2. While holding the access key fob and pressing the “SET” button, press the “🔒” button of the access key fob.

A chirp sounds once, and the seat position is registered.

▽ **Retrieval of seat position registered with button “1” or “2”**

⚠ WARNING

Be sure to press the correct button to retrieve your registered seat position. If the seat position is not optimum for you, it may adversely affect your driving and may reduce the effectiveness of the seatbelt. That could result in an accident involving serious injury or death.

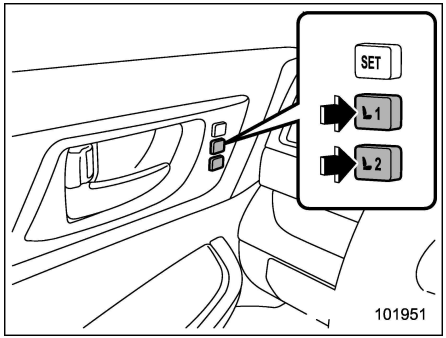

1. Turn the ignition switch to the “ON” position.
2. While the select lever is in the “P” position and the parking brake is applied, press button “1” or “2”.

A chirp sounds and the seat moves to the registered position. When the seat moves to the registered position, a chirp will sound.

NOTE

- **If a new position is registered for the same button, the previously registered seat position is deleted.**
- **If the vehicle battery is removed, the registered seat position is not deleted.**
- **When the button “1” or “2” is pressed within 45 seconds after the driver’s door is opened, the registered seat position can be retrieved even if the ignition switch is in the “LOCK” or “OFF” position.**

▽ **Retrieval of the seat position registered with access key fob**

1. Hold the registered access key fob.

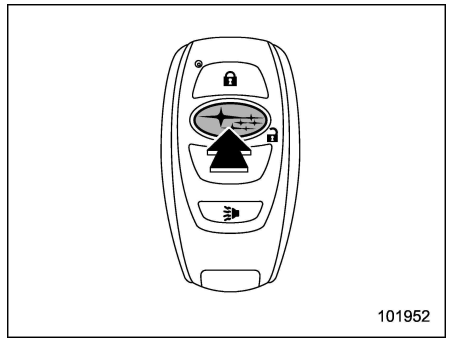

2. Unlock the driver’s door by pressing the “🔓” button or gripping the door handle.
3. Open the driver’s door.

A chirp sounds and the seat moves to the registered position. When the seat moves to the registered position, a chirp will sound.

– CONTINUED –

NOTE

- **If the registered seat position cannot be retrieved after performing the previous procedures, try the following procedures.**
  (1) Press the "SET" button on the driver's door.
  (2) Press the "🔒" button on the access key fob or touch the door lock sensor to lock the doors.
  (3) Perform the prior procedures again.
- **If the keyless access function is disabled, the seat position cannot be retrieved by gripping the driver's door handle. However, the seat position can still be retrieved by pressing the "🔓" button on the access key fob. For information about how to enable/disable the keyless access function, refer to "Disabling keyless access function" ☞2-19.**
- **If a new position is registered for the same access key fob, the previously registered seat position is deleted.**

▽ **Clearing the registered seat position with access key fob**

1. Close the driver's door.
2. While holding the access key fob and pressing the "SET" button, press the "🔒" button on the access key fob.

A chirp will sound, and the registered seat position will be cleared.

■ Head restraint adjustment

⚠ WARNING

- **Never drive the vehicle with the head restraints removed because they are designed to reduce the risk of serious neck injury in the event that the vehicle is struck from the rear. Also, never install the head restraints the opposite way around. Doing so will prevent the head restraints from functioning as intended. Therefore, when you remove the head restraints, you must reinstall all head restraints correctly to protect vehicle occupants.**
- **All occupants, including the driver, should not operate a vehicle or sit in a vehicle's seat until the head restraints are placed in their proper positions in order to minimize the risk of neck injury in the event of a crash.**
- **The front seat head restraints are designed to be installed into the front seats only. The rear seat head restraints are designed to be installed into the rear seats only. Do not attempt to install the front seat head restraints into the rear seats, or the rear seat head restraints into the front seats.**

Both the driver's seat and front passenger's seat are equipped with head restraints. Both head restraints are adjustable in the following ways.

▼ **Head restraint height adjustment**

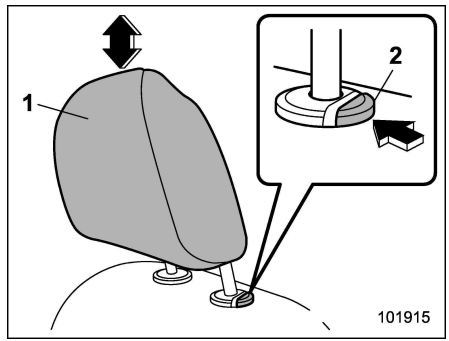

1) Head restraint
2) Release button

To raise:
Pull the head restraint up.

To lower:
Push the head restraint down while pressing the release button on the top of the seatback.

To remove:

While pressing the release button, pull out the head restraint.

To install:

Install the head restraint into the holes that are located on the top of the seatback until the head restraint locks. Press and hold the release button to lower the head restraint.

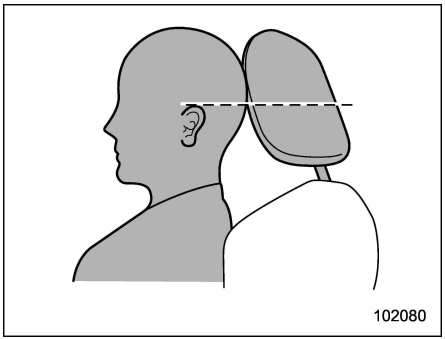

Each head restraint should be adjusted so that the center of the head restraint is closest to the top of the occupant's ears.

▼ **Head restraint angle adjustment**

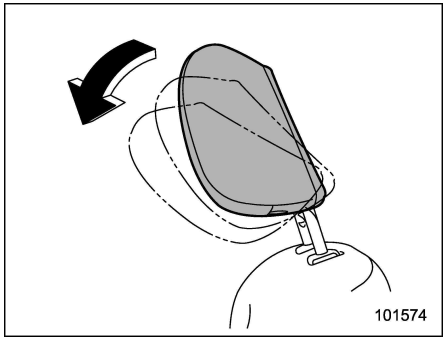

The angle of the head restraint can be adjusted in several steps. While maintaining a suitable driving posture, adjust the head restraint to a position where the back of your head is as close to the head restraint as possible.

To tilt:

Tilt the head restraint by hand to the preferred position. A click will be audible when the head restraint is locked.

To return:

Tilt the head restraint once as far forward as it can go. The head restraint will automatically return to the fully upright position. Then, adjust the head restraint again to the preferred angle.

Seat heater (if equipped)

The seat heater operates when the ignition switch is in the "ON" position.

⚠ CAUTION

- **People with delicate skin may suffer slight burns even at low temperatures if they use the seat heater for a long period of time. When using the heater, always be sure to warn the persons concerned.**
- **Do not put anything on the seat which insulates against heat, such as a blanket, cushion, or similar items. This may cause the seat heater to overheat.**
- **When the seat is warmed enough or before you leave the vehicle, be sure to turn off the seat heater.**

NOTE

Use of the seat heater for a long period of time while the engine is not running can cause battery discharge.

– CONTINUED –

■ Front seat heater

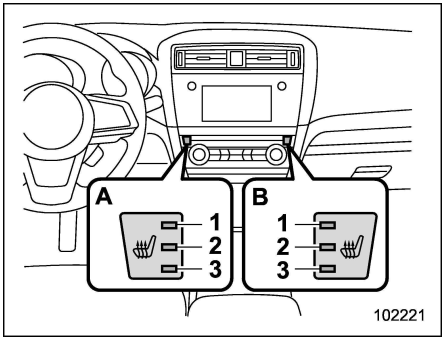

Front seat heater switch
1) HIGH mode indicator
2) MID mode indicator
3) LOW mode indicator
A) Driver's side
B) Front passenger's side

Press the front seat heater switch. Each time you press the switch, the mode will change as follows.

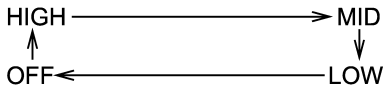

When LOW mode is selected, the LOW mode indicator on the front seat heater switch illuminates. When MID mode is selected, both the LOW and MID mode indicators illuminate. When HIGH mode is selected, all 3 LOW, MID and HIGH mode indicators illuminate. When the OFF mode is selected, all the indicators turn off.

Selecting "HIGH" mode will cause the seat to heat up quicker.

■ Rear seat heater (if equipped)

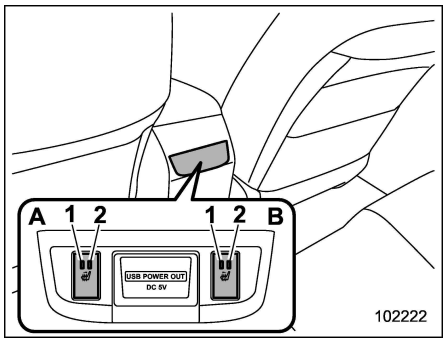

Rear seat heater switch
1) LOW mode indicator
2) HIGH mode indicator
A) Left-hand side
B) Right-hand side

Press the rear seat heater switch. Each time you press the switch, the mode will change as follows.

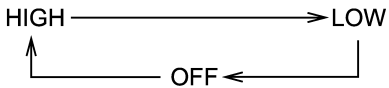

When LOW mode is selected, the LOW mode indicator on the rear seat heater switch illuminates. When HIGH mode is selected, both the LOW and HIGH mode indicators illuminate. When the OFF mode is selected, all the indicators turn off.

Selecting "HIGH" mode will cause the seat to heat up quicker.

NOTE

Only the front seat heater switches retain the previous switch position even if the vehicle has restarted. The rear seat switch will reset.

Rear seats

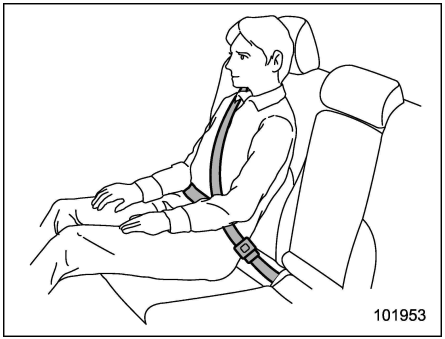

WARNING

Seatbelts provide maximum restraint when the occupant sits well back and upright in the seat. Do not put cushions or any other materials between occupants and seatbacks or seat cushions. If you do so, the risk of sliding under the lap belt and of the lap belt sliding up over the abdomen will increase, and both can result in serious internal injury or death.

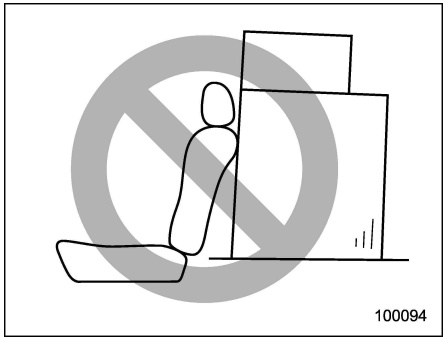

WARNING

Never stack luggage or other cargo higher than the top of the seatback because it could tumble forward and injure passengers in the event of a sudden stop or accident.

■ Reclining the seatback (Outback)

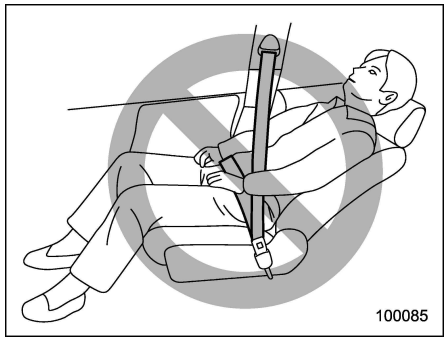

WARNING

To prevent the passenger from sliding under the seatbelt in the event of a collision, always put the seatback in the upright position while the vehicle is in motion.

CAUTION

If the vehicle is equipped with a cargo area cover, observe the following precautions.

- **Be careful not to pinch your hand between the headrest and the**

– CONTINUED –

cargo area cover when you recline the rear seat.

- **Move the front cover of the cargo area cover backward so that the cover is not damaged by the reclined seatback. Refer to "Cargo area cover (Outback – if equipped)" ☞6-16.**

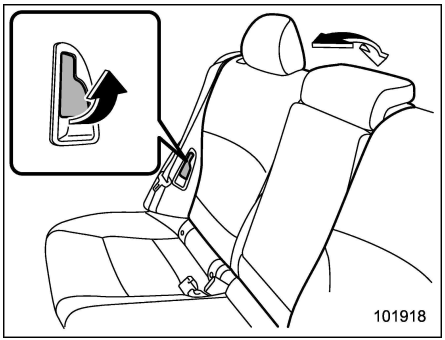

Adjust the seatback to the desired position while pulling the lever.

After adjusting the seatback, release the lever and make sure the seatback is securely locked into place.

■ Folding down the rear seatback

⚠ WARNING

- **When you fold down the seatback, check that there are no passengers or objects on the rear seat. Not doing so creates a risk of injury or property damage if the seatback suddenly folds down.**
- **Never allow passengers to ride on the folded rear seatback or in the cargo area or trunk. Doing so may result in serious injury or death.**
- **Secure all objects and especially long items properly to prevent them from being thrown around inside the vehicle and causing serious injury during a sudden stop, a sudden steering maneuver or a rapid acceleration.**
- **When you return the seatback to its original position, shake the seatback slightly to confirm that it is securely fixed in place. If the seatback is not securely fixed in place, the seatback may suddenly fold down in the event of sudden braking, or objects may move out from the cargo area, which could cause serious injury or death.**
- **After returning the rear seat to its original position, be certain to place all of the seatbelts and the tab attached to the seat cushion above the seat cushion. Also, make certain that the shoulder belts are fully visible.**

⚠ CAUTION

The rear seatback may fold down quickly due to the internal spring. Hold the seatback while pulling the release lever to slow it down.

▼ Legacy

To fold down the seatback, perform the following procedure.

1. Open the trunk lid. Refer to "Opening the trunk lid (Legacy)" ☞2-26, "Opening the trunk lid (Legacy)" ☞2-27 or "To open the trunk lid from inside" ☞2-39.

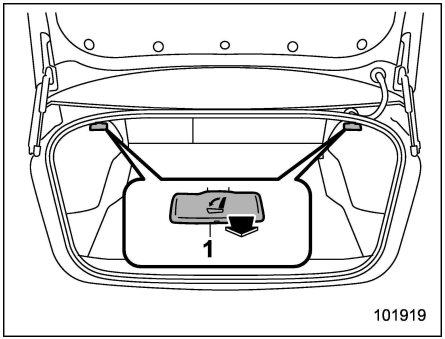

1) Release lever

2. Pull the release lever on the side that you want to fold down.
3. Fold the seatback down.

To return the seatback to its original position, raise the seatback until it locks into place and make sure that it is securely locked.

▼ **Outback**

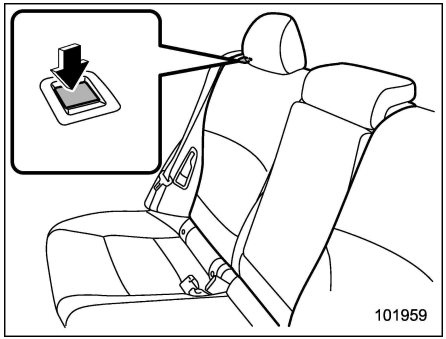

Release button

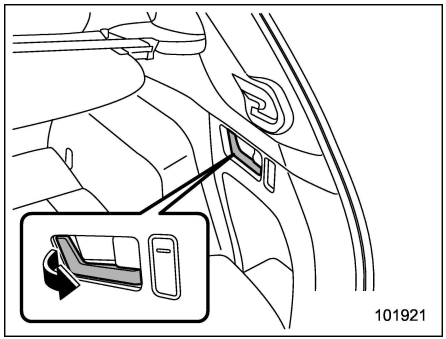

Release lever on both sides of the cargo area

Unlock the seatback by performing either of the following procedures and then fold the seatback down.

- Push the release button.
- Pull the release lever.

To return the seatback to its original position, raise the seatback until it locks into place. Make sure that it is securely locked.

– CONTINUED –

■ Head restraint adjustment

Both the rear window side seats and the rear center seat are equipped with head restraints.

⚠ WARNING

- **Never drive the vehicle with the head restraints removed because they are designed to reduce the risk of serious neck injury in the event that the vehicle is struck from the rear. Therefore, when you remove the head restraints, you must reinstall all head restraints to protect vehicle occupants.**
- **All occupants, including the driver, should not operate a vehicle or sit in a vehicle's seat until the head restraints are placed in their proper positions in order to minimize the risk of neck injury in the event of a crash.**
- **The front seat head restraints are designed to be installed into the front seats only. The rear seat head restraints are designed to be installed into the rear seats only. Do not attempt to install the front seat head restraints into the rear seats, or the rear seat head restraints into the front seats.**

▼ Rear window side seating position

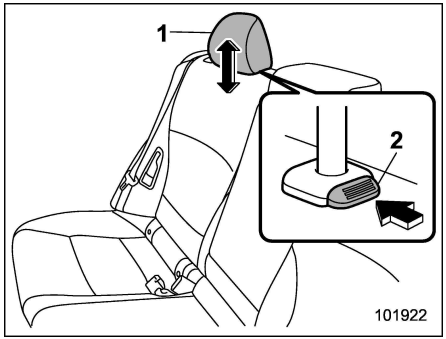

1) Head restraint
2) Release button

To raise:

Pull the head restraint up.

To lower:

Push the head restraint down while pressing the release button on the top of the seatback.

To remove:

While pressing the release button, pull out the head restraint.

To install:

Install the head restraint into the holes that are located on the top of the seatback until the head restraint locks.

The head restraint should be adjusted so that the center of the head restraint is closest to the top of the occupant's ears.

When the seats are not occupied, lower the head restraints to improve rearward visibility.

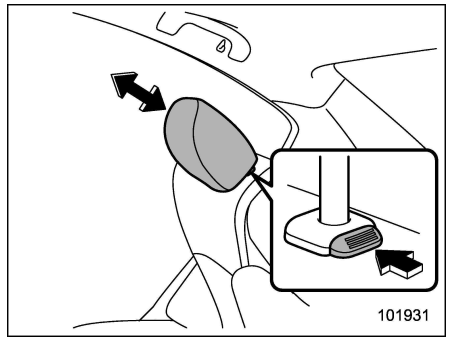

NOTE

For Legacy, it is not possible to remove or install the head restraint without folding down the rear seatback. Fold down the rear seatback and then remove or install the head restraint.

▼ **Rear center seating position**

⚠ CAUTION

The head restraint is not intended to be used in the retracted position. Before sitting on the seat, raise the head restraint to the extended position.

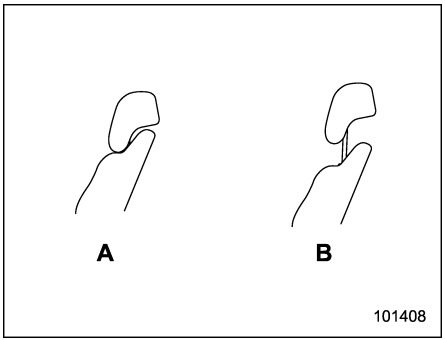

A) When not used (retracted position)
B) When used (extended position)

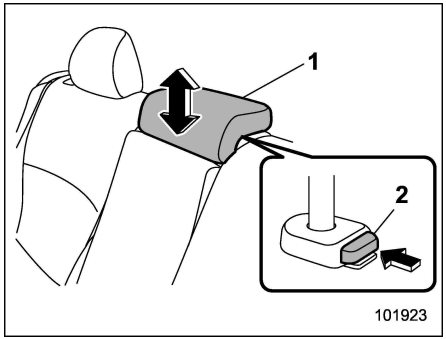

1) Head restraint
2) Release button

To raise:

Pull the head restraint up.

To lower:

Push the head restraint down while pressing the release button on the top of the seatback.

To remove:

While pressing the release button, pull out the head restraint.

To install:

Install the head restraint into the holes that are located on the top of the seatback until the head restraint locks.

When the rear-center seating position is occupied, raise the head restraint to the extended position. When the rear center seating position is not occupied, lower the head restraint to improve rearward visibility.

■ Armrest

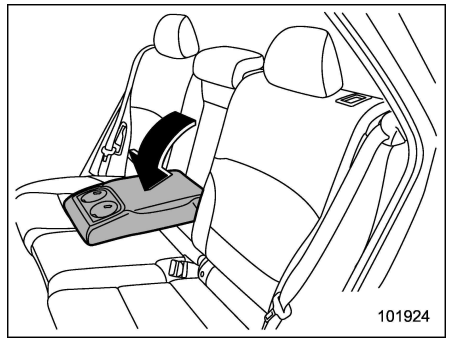

To lower the armrest, pull on the armrest's top edge.

⚠ WARNING

To avoid serious injury, passengers must never be allowed to sit on the center armrest while the vehicle is in motion.

Seatbelts

■ Seatbelt safety tips

⚠ WARNING

- **All persons in the vehicle should fasten their seatbelts BEFORE the vehicle starts to move. Otherwise, the possibility of serious injury becomes greater in the event of a sudden stop or accident.**
- **All belts should fit snugly in order to provide full restraint. Loose fitting belts are not as effective in preventing or reducing injury.**
- **Each seatbelt is designed to support only one person. Never use a single belt for two or more persons – even children. Otherwise, in an accident, serious injury or death could result.**
- **Replace all seatbelt assemblies including retractors and attaching hardware worn by occupants of a vehicle that has been in a serious accident. The entire assembly should be replaced even if damage is not obvious.**
- **Put children in the rear seat properly restrained at all times. The SRS airbag deploys with considerable speed and force and can injure or even kill children, especially if they are not restrained or improperly restrained. Because children are lighter and weaker than adults, their risk of being injured from deployment is greater. Consequently, we strongly recommend that ALL children (including those in child seats and those that have outgrown child restraint devices) sit in the REAR seat properly restrained at all times in a child restraint device or in a seatbelt, whichever is appropriate for the child's height and weight.**

  Secure ALL types of child restraint devices (including forward facing child seats) in the REAR seats at all times.

  NEVER INSTALL A REARWARD FACING CHILD SEAT IN THE FRONT SEAT. DOING SO RISKS SERIOUS INJURY OR DEATH TO THE CHILD BY PLACING THE CHILD'S HEAD TOO CLOSE TO THE SRS AIRBAG.

  According to accident statistics, children are safer when properly restrained in the rear seating positions than in the front seating positions. For instructions and precautions concerning the child restraint system, refer to "Child restraint systems" ☞1-27.

Your vehicle is equipped with a crash sensing and diagnostic module, which will record the use of the seatbelt by the front passenger when any of the SRS frontal, side and curtain airbags deploys.

▼ Infants or small children

Use a child restraint system that is suitable for your vehicle. Refer to "Child restraint systems" ☞1-27.

▼ Children

If a child is too big for a child restraint system, the child should sit in the rear seat and be restrained using the seatbelts. According to accident statistics, children are safer when properly restrained in the rear seating positions than in the front seating positions. Never allow a child to stand up or kneel on the seat.

If the shoulder portion of the belt crosses the face or neck, move the child closer to the belt buckle to help provide a good

shoulder belt fit. Care must be taken to securely place the lap belt as low as possible on the hips and not on the child's waist. If the shoulder portion of the belt cannot be properly positioned, a child restraint system should be used. Never place the shoulder belt under the child's arm or behind the child's back.

▼ **Expectant mothers**

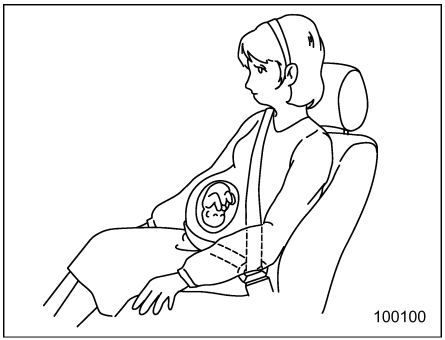

Expectant mothers also need to use the seatbelts. They should consult their doctor for specific recommendations. The lap belt should be worn securely and as low as possible over the hips, not over the waist.

■ Emergency Locking Retractor (ELR)

The driver's seatbelt has an Emergency Locking Retractor (ELR).

The emergency locking retractor allows normal body movement but the retractor locks automatically during a sudden stop, impact or if you pull the belt very quickly out of the retractor.

■ Automatic Locking Retractor/ Emergency Locking Retractor (ALR/ELR)

Each passenger's seatbelt has an Automatic Locking Retractor/Emergency Locking Retractor (ALR/ELR). The Automatic Locking Retractor/Emergency Locking Retractor normally functions as an Emergency Locking Retractor (ELR). The ALR/ELR has an additional locking mode, "Automatic Locking Retractor (ALR) mode", intended to secure a child restraint system.

The ALR mode functions as follows.

When the seatbelt is once drawn out completely and is then retracted even slightly, the retractor locks the seatbelt in that position and the seatbelt cannot be extended. As the belt is rewinding, clicks will be heard which indicate the retractor functions as an ALR. When the seatbelt is retracted fully, the ALR mode is canceled and the ELR mode is restored.

When securing a child restraint system on the rear seats by using a seatbelt, the seatbelt must be changed over to the Automatic Locking Retractor (ALR) mode. For instructions on how to install the child restraint system using a seatbelt, refer to "Installing child restraint systems with ALR/ELR seatbelt" ☞1-30.

When the child restraint system is removed, make sure that the retractor is restored to the Emergency Locking Retractor (ELR) mode by allowing the seatbelt to retract fully.

■ Seatbelt warning light and chime

Refer to "Seatbelt warning light and chime" ☞3-12.

■ Fastening the seatbelt

⚠ WARNING

- **Never use a belt that is twisted or reversed. In an accident, this can increase the risk or severity of injury.**
- **Keep the lap belt as low as**

– CONTINUED –

possible on your hips. In a collision, this spreads the force of the lap belt over stronger hip bones instead of across the weaker abdomen.

- **Seatbelts provide maximum restraint when the occupant sits well back and upright in the seat. To reduce the risk of sliding under the seatbelt in a collision, the front seatbacks should be always used in the upright position while the vehicle is running. If the front seatbacks are not used in the upright position in a collision, the risk of sliding under the lap belt and of the lap belt sliding up over the abdomen will increase, and both can result in serious internal injury or death.**
- **Do not put cushions or any other materials between occupants and seatbacks or seat cushions. If you do so, the risk of sliding under the lap belt and of the lap belt sliding up over the abdomen will increase, and both can result in serious internal injury or death.**

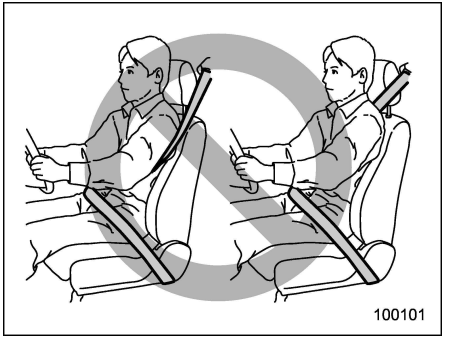

WARNING

Never place the shoulder belt under the arm or behind the back. If an accident occurs, this can increase the risk or severity of injury.

CAUTION

Metallic parts of the seatbelt can become very hot in a vehicle that has been closed up in sunny weather; they could burn an occupant. Do not touch such hot parts until they cool.

▼ Front seatbelts

1. Adjust the seat position:

Driver's seat: Adjust the seatback to the upright position. Move the seat as far from the steering wheel as practical while still maintaining full vehicle control.

Front passenger's seat: Adjust the seatback to the upright position. Move the seat as far back as possible.

2. Sit well back in the seat.
3. Pick up the tongue plate and pull the belt out slowly. Do not let it get twisted.
   - If the belt stops before reaching the buckle, return the belt slightly and pull it out more slowly.
   - If the belt still cannot be unlocked, let the belt retract slightly after giving it a strong pull, then pull it out slowly again.

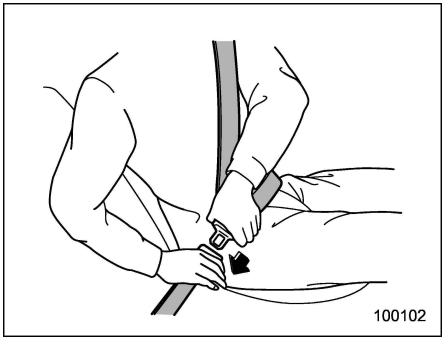

4. Insert the tongue plate into the buckle until you hear a click.

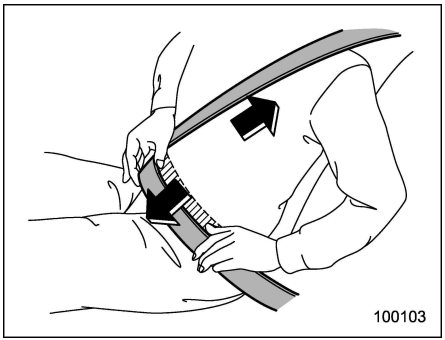

5. To make the lap part tight, pull up on the shoulder belt.
6. Place the lap belt as low as possible on your hips, not on your waist.

▽ Adjusting the front seat shoulder belt anchor height

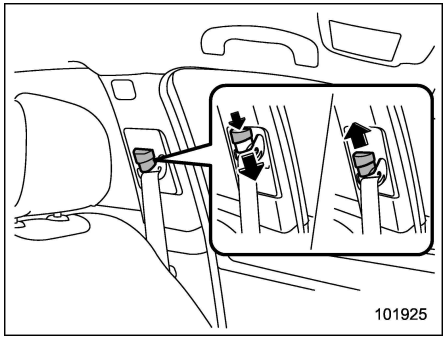

The shoulder belt anchor height should be adjusted to the position best suited for the driver/front passenger. Always adjust the anchor height so that the shoulder belt passes over the middle of the shoulder without touching the neck.

To raise:

Slide the anchor up.

To lower:

Push the upper part of the anchor and slide the anchor down.

Pull down the anchor to make sure that it is locked in place.

⚠ WARNING

When wearing the seatbelts, make sure the shoulder portion of the webbing does not pass over your neck. If it does, adjust the seatbelt anchor to a lower position. Placing the shoulder belt over the neck may result in neck injury during sudden braking or in a collision.

▽ Unfastening the seatbelt

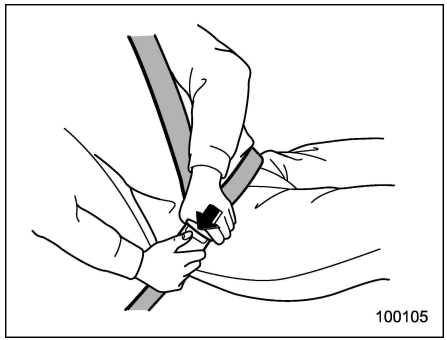

1. Push the button on the buckle.
2. Have the seatbelt retracted slowly to avoid the seatbelt being tangled or twisted.

Before closing the door, make sure that the belts are retracted properly to avoid catching the belt webbing in the door.

– CONTINUED –

▼ Rear seatbelts (except rear center seatbelt on Outback)

1. Sit well back in the seat.
2. Pick up the tongue plate and pull the belt out slowly. Do not let it get twisted.
   - If the belt stops before reaching the buckle, return the belt slightly and pull it out more slowly.
   - If the belt still cannot be unlocked, let the belt retract slightly after giving a strong pull on it, then pull it out slowly again.

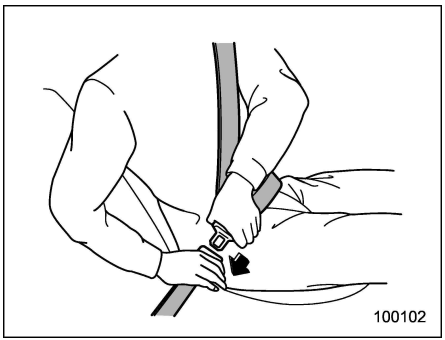

3. Insert the tongue plate into the buckle until you hear a click.

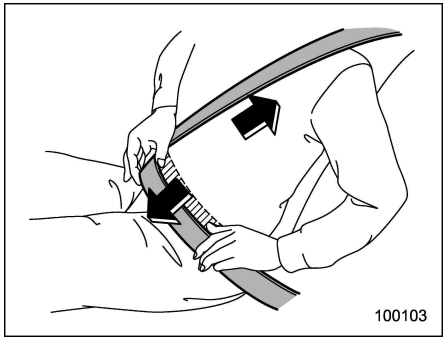

4. To make the lap part tight, pull up on the shoulder belt.
5. Place the lap belt as low as possible on your hips, not on your waist.

▽ Unfastening the seatbelt

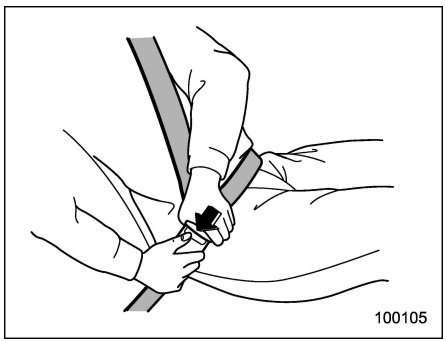

1. Push the button on the buckle.
2. Have the seatbelt retracted slowly to avoid the seatbelt being tangled or twisted.

Before closing the door, make sure that the belts are retracted properly to avoid catching the belt webbing in the door.

▼ Rear center seatbelt on Outback

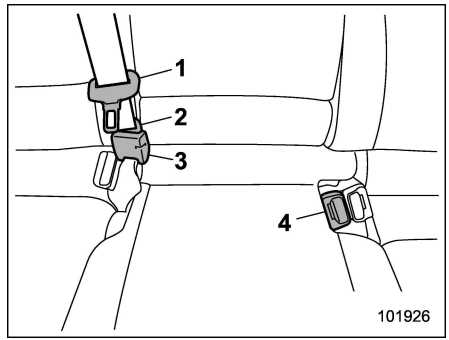

1) Center seatbelt tongue plate
2) Connector (tongue)
3) Connector (buckle)
4) Center seatbelt buckle

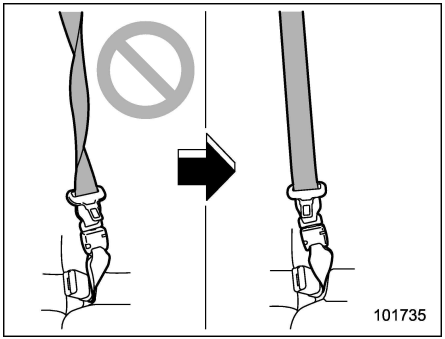

⚠ WARNING

Fastening the seatbelt with the webbing twisted can increase the risk or severity of injury in an accident. When fastening the belt after it is pulled out from the retractor, especially when inserting the connector's tongue plate into the mating buckle (on right-hand side), always check that the webbing is not twisted.

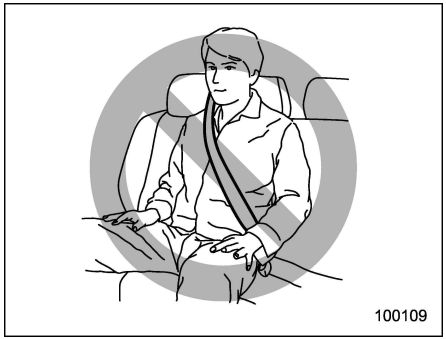

⚠ WARNING

Be sure to fasten both tongue plates to the respective buckles. If the seatbelt is used only as a shoulder belt (with the connector's tongue plate not fastened to the connector's buckle on the right-hand side), it cannot properly restrain the wearer in position in an accident, possibly resulting in serious injury or death.

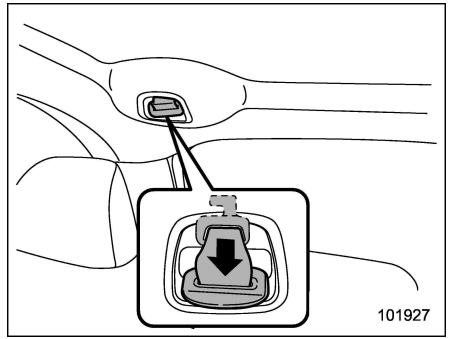

Rear center seatbelt is stowed in the recess of the ceiling.

1. Retrieve the connector (tongue) plate from the slot in the recess by pulling the connector (tongue) plate.

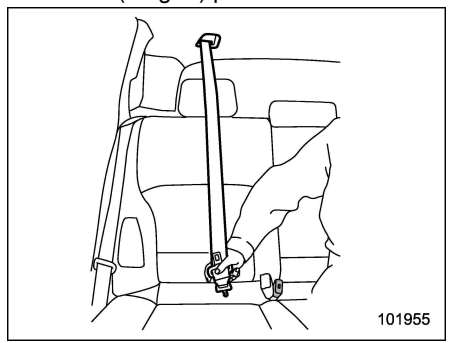

– CONTINUED –

2. Pull out the seatbelt slowly from the retractor.

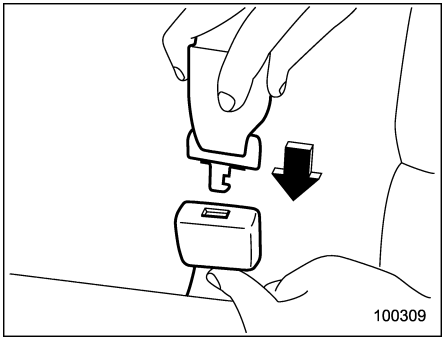

3. After confirming that the webbing is not twisted, insert the connector (tongue) attached at the webbing end into the buckle on the right-hand side until a click is heard.

- If the belt stops before reaching the buckle, return the belt slightly and pull it out more slowly.
- If the belt still cannot be unlocked, let the belt retract slightly after giving it a strong pull, then pull it out slowly again.

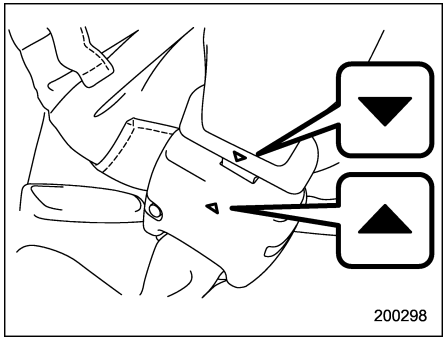

4. After fastening the seatbelt, make sure that the "▼" mark on the connector (tongue) and the "▲" mark on the buckle face outwards.

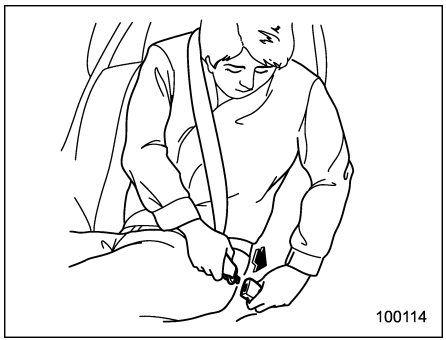

5. Insert the center seatbelt tongue plate into the center seatbelt buckle until it clicks.

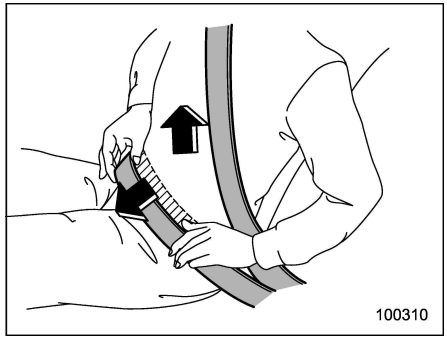

6. To make the lap part tight, pull up on the shoulder belt. And place the lap belt as low as possible on your hips, not on your waist.

▽ **Unfastening the seatbelt**

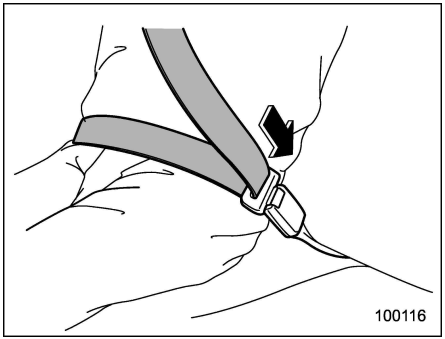

1. Push the release button of the center seatbelt buckle (on the left-hand side) to unfasten the seatbelt.

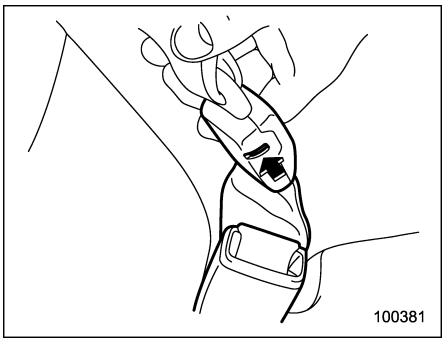

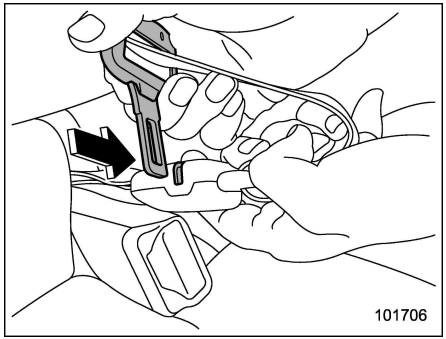

2. Insert a tongue plate or other hard pointed object into the slot in the connector (buckle) on the right-hand side and push it in. The connector (tongue) plate will then disconnect from the buckle.

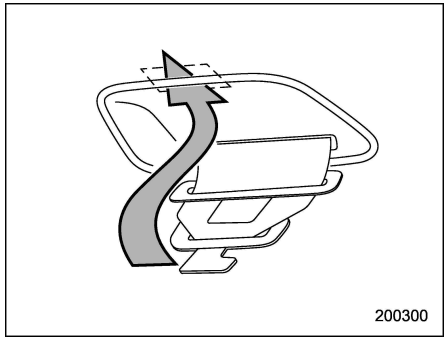

3. Allow the retractor to roll up the belt. You should hold the webbing end and guide it back into the retractor while it is rolling up. Neatly store the tongue plate in the recess and then insert the connector (tongue) plate into the slot.

– CONTINUED –

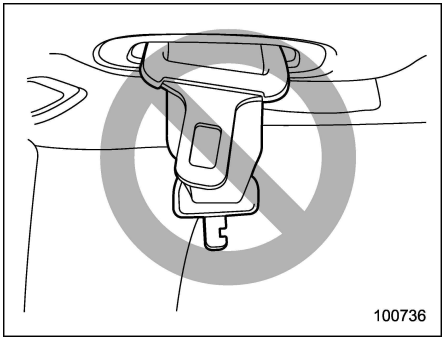

⚠ CAUTION

Observe the following precautions. Otherwise, the tongue plate can hit against the trim, causing damage to the trim.

- **Do not allow the retractor to roll up the seatbelt too quickly.**
- **Have the seatbelt fully rolled up so that the tongue plates are neatly stored.**

■ Seatbelt maintenance

To clean the seatbelts, use a mild soap and lukewarm water. Never bleach or dye the belts because this could seriously affect their strength.

Inspect the seatbelts and attachments including the webbing and all hardware periodically for cracks, cuts, gashes, tears, damage, loose bolts or worn areas. Replace the seatbelts even if only minor damage is found.

⚠ CAUTION

- **Keep the belts free of polishes, oils, chemicals and particularly battery acid.**
- **Never attempt to make modifications or changes that will prevent the seatbelt from operating properly.**

Front seatbelt pretensioners

The driver's and front passenger's seatbelts have a seatbelt pretensioner. The seatbelt pretensioners are designed to be activated in the event of an accident involving moderate to severe frontal and side collisions and rollover accidents.

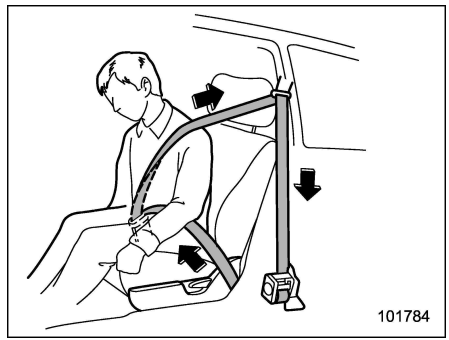

The following sensors serve as sensors for the pretensioners.

- Front sub sensor
- Front door impact sensor
- Rollover sensor

If the sensor detects a certain predetermined amount of force during frontal or side collisions or rollover accidents, the front seatbelt is quickly drawn back in by the retractor to take up the slack so that the

belt more effectively restrains the driver.

When a seatbelt pretensioner is activated, an operating noise will be heard and a small amount of smoke will be released. These occurrences are normal and not harmful. This smoke does not indicate a fire in the vehicle.

Once the seatbelt pretensioner has been activated, the seatbelt retractor remains locked. Consequently, the seatbelt cannot be pulled out and retracted and therefore must be replaced.

NOTE

- **Seatbelt pretensioners are not designed to activate in minor impacts.**
- **In cases of rollover accidents, as the SRS curtain airbags deploy, the seatbelt pretensioners are activated simultaneously.**
- **In cases of frontal collisions, the following components will operate simultaneously.**
  - **Seatbelt pretensioner for driver**
  - **Seatbelt pretensioner for front passenger**
  - **SRS frontal airbag for driver**
  - **SRS frontal airbag for front passenger***
  - **SRS seat cushion airbag for driver**
  - **SRS seat cushion airbag for front passenger***
  - **SRS curtain airbags (both sides) (if an offset frontal collision occurs)**

  ***: This does not operate if the occupant detection system deactivates airbag operation. For details, refer to "Front passenger's SRS frontal airbag" ☞1-52.**
- **In cases of side collisions, the following components will operate simultaneously.**
  - **SRS curtain airbag (impacted side)**
  - **SRS side airbag (impacted side) (when any of the center pillar impact sensors/front door impact sensors senses an impact force)**
  - **Seatbelt pretensioner for driver (when the driver's side front door impact sensor senses an impact force)**
  - **Seatbelt pretensioner for front passenger (when the front passenger's side front door impact sensor senses an impact force)**
- **Pretensioners are designed to function on a one-time-only basis. In the event that a pretensioner is activated, both the driver's and front passenger's seatbelt retractor assemblies should be replaced only by an authorized SUBARU dealer. When replacing seatbelt retractor assemblies, use only genuine SUBARU parts.**
- **If either front seatbelt does not retract or cannot be pulled out due to a malfunction or activation of the pretensioner, contact your SUBARU dealer as soon as possible.**
- **If the front seatbelt retractor assembly or surrounding area has been damaged, contact your SUBARU dealer as soon as possible.**
- **When you sell your vehicle, we urge you to inform the buyer that the vehicle is equipped with seatbelt pretensioners. Also, notify the buyer of the contents of this section.**

⚠ WARNING

- **To obtain maximum protection, the occupants should sit in an upright position with their seatbelts properly fastened. Refer to "Seatbelts" ☞1-16.**
- **Do not modify, remove or strike the front seatbelt retractor assemblies or surrounding area. This could result in accidental activation of the seatbelt pretensioners or could make the system inoperative, possibly resulting in serious injury. Seatbelt preten-**

– CONTINUED –

sioners have no user-serviceable parts. For required servicing of front seatbelt retractors equipped with seatbelt pretensioners, consult your SUBARU dealer.

- **When discarding front seatbelt retractor assemblies or scrapping the entire vehicle due to collision damage or for other reasons, consult your SUBARU dealer.**

■ System monitors

A diagnostic system continually monitors the readiness of the seatbelt pretensioner while the vehicle is being driven. The seatbelt pretensioners share the control module with the SRS airbag system. Therefore, if any malfunction occurs in a seatbelt pretensioner, the SRS airbag system warning light will illuminate. For details, refer to "SRS airbag system monitors" ☞1-68.

■ System servicing

⚠ WARNING

- **When discarding a seatbelt retractor assembly or scrapping the entire vehicle damaged by a collision, consult your SUBARU dealer.**
- **Tampering with or disconnecting the system's wiring could result in accidental activation of the seatbelt pretensioner and/or SRS airbag or could make the system inoperative, which may result in serious injury. Do not use electrical test equipment on any circuit related to the seatbelt pretensioner and SRS airbag systems. For required servicing of the seatbelt pretensioner, consult your nearest SUBARU dealer.**

⚠ CAUTION

The sensors and SRS airbag control module are located in the following locations.

- **Front sub sensors: on both sides of the radiator panel**
- **Front door impact sensors: on both front doors**
- **SRS airbag control module (including the impact sensors and rollover sensor): under the center console**

If you need service or repair in those areas or near the front seatbelt retractors, have the work performed by your authorized SUBARU dealer.

NOTE

If the front part of the vehicle is damaged in an accident to the extent that the seatbelt pretensioner does not operate, contact your SUBARU dealer as soon as possible.

■ Precautions against vehicle modification

Always consult your SUBARU dealer if you want to install any accessory parts to your vehicle.

⚠ CAUTION

Do not perform any of the following modifications. Such modifications can interfere with proper operation of the seatbelt pretensioners.

- **Attachment of any equipment (bush bar, winches, snow plow, skid plate, etc.) other than genuine SUBARU accessory parts to the front end.**
- **Modification of the suspension system or front end structure.**
- **Installation of a tire of different size and construction from the tires specified on the vehicle placard attached to the door pillar or specified for individual vehicle models in this Owner's Manual.**

Child restraint systems

Infants and small children should always be placed in an infant or child restraint system in the rear seat while riding in the vehicle.

You should use an infant or child restraint system that meets Federal Motor Vehicle Safety Standards or Canada Motor Vehicle Safety Standards, is compatible with your vehicle and is appropriate for the child's age and size.

All child restraint systems are designed to be secured in vehicle seats by lap belts or the lap belt portion of a lap/shoulder belt (except those covered under the section in this manual, entitled "Installation of child restraint systems by use of lower and tether anchorages (LATCH)" ☞1-36).

Children could be endangered in an accident if their child restraints are not properly secured in the vehicle. When installing the child restraint system, carefully follow the manufacturer's instructions.

According to accident statistics, children are safer when properly restrained in the rear seating positions than in the front seating positions.

All U.S. states and Canadian provinces require that infants and small children be restrained in an approved child restraint system at all times while the vehicle is moving.

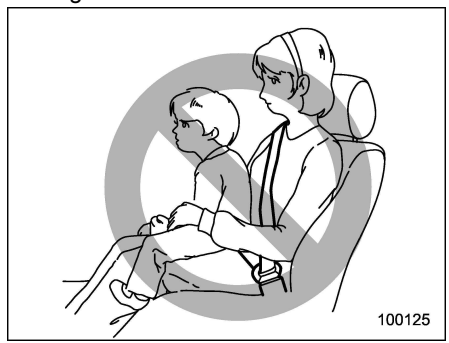

– CONTINUED –

⚠ WARNING

Never let a passenger hold a child on his or her lap while the vehicle is moving. The passenger cannot protect the child from injury in a collision, because the child will be caught between the passenger and objects inside the vehicle. Additionally, holding a child in your lap or arms in the front seat exposes that child to another serious danger. Since the SRS airbag deploys with considerable speed and force, the child could be injured or even killed.

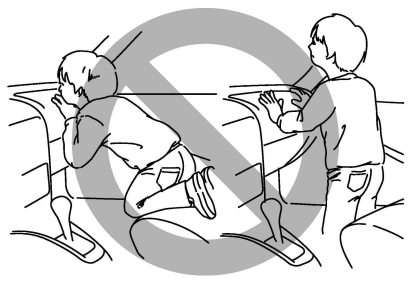

100126

⚠ WARNING

Children should be properly restrained at all times. Never allow a child to stand up, or to kneel on any seat. Unrestrained children will be thrown forward during sudden stop or in an accident and can be injured seriously.

Additionally, children standing up or kneeling on or in front of the front seat are exposed another serious danger. Since the SRS airbag deploys with considerable speed and force, the child could be injured or even killed.

■ Where to place a child restraint system

The following descriptions are SUBARU's recommendations on where to place a child restraint system in your vehicle.

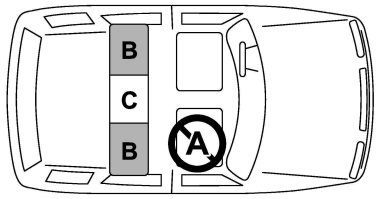

100127

A: Front passenger's seat

You should not install a child restraint system (including a booster seat) due to the hazard to children posed by the passenger's airbag.

B: Rear seat, window-side seating positions

Recommended positions for all types of child restraint systems.

In these positions, the following equipment is provided for installing a child restraint system.

- Automatic Locking Retractor/Emergency Locking Retractor (ALR/ELR) seatbelts
- Lower anchorages (bars)
- Upper anchorages (tether anchorages)

Some types of child restraints might not be able to be secured firmly due to projection of the seat cushion.

In this seating position, you should use only a child restraint system that has a bottom base that fits snugly against the contours of the seat cushion and can be securely retained using the seatbelt.

C: Rear seat, center seating position

The ALR/ELR seatbelt and an upper anchorage (tether anchorage, if equipped) are provided in this position.

Some types of child restraints might not be able to be secured firmly due to projection of the seat cushion.

In this seating position, you should use only a child restraint system that has a bottom base that fits snugly against the contours of the seat cushion and can be securely retained using the seatbelt.

When you install a child restraint system in the rear seat's center seating position, raise the center head restraint.

Lower anchorages (bars) for window-side seating positions may be used for a seat in the center seating position if a child restraint system manufacturer's instructions permit and specify using anchors as far apart as those in this vehicle.

If a child restraint system is not correctly fixed in place (for example, if a child restraint system can be moved more than 1 inch (2.5 cm) from side to side), you should install the child restraint system in a rear seat, window-side seating position.

WARNING

- **Even with advanced airbags, children can be seriously injured by the airbag. Put children in the rear seat properly restrained at all times. The SRS airbag deploys with considerable speed and force and can injure or even kill children, especially if they are not restrained or improperly restrained. Because children are lighter and weaker than adults, their risk of being injured from deployment is greater.**

  For that reason, be sure to secure ALL types of child restraint devices (including forward facing child seats) in the REAR seats at all times. You should choose a restraint device which is appropriate for the child's age, height and weight. According to accident statistics, children are safer when properly restrained in the rear seating positions than in the front seating positions.
- **Do not use lower anchorages (bars) for a seat in the center seating position unless a child restraint system manufacturer's instructions permit and specify using anchors spaced as far apart as those in this vehicle.**
- **Do not connect two or more lower hooks onto the same anchorage (bar).**

– CONTINUED –

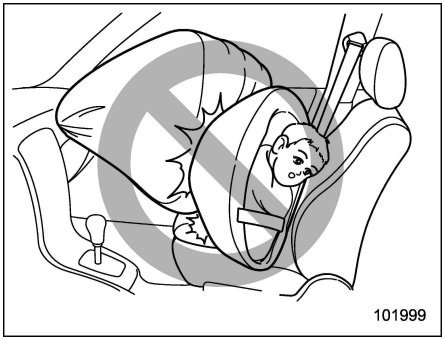

⚠ WARNING

SINCE YOUR VEHICLE IS EQUIPPED WITH A PASSENGER'S SRS AIRBAG, DO NOT INSTALL A REARWARD FACING CHILD SAFETY SEAT IN THE FRONT PASSENGER'S SEAT. DOING SO RISKS SERIOUS INJURY OR DEATH TO THE CHILD BY PLACING THE CHILD'S HEAD TOO CLOSE TO THE SRS AIRBAG.

■ Choosing a child restraint system

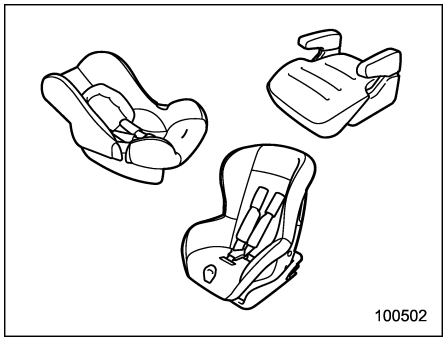

Choose a child restraint system that is appropriate for the child's age and size (weight and height) in order to provide the child with proper protection. The child restraint system should meet all applicable requirements of Federal Motor Vehicle Safety Standards for United States or Canada Motor Vehicle Safety Standards for Canada. It can be identified by looking for the label on the child restraint system or the manufacture's statement of compliance in the document attached to the system. Also it is important for you to make sure that the child restraint system is compatible with the vehicle in which it will be used.

■ Installing child restraint systems with ALR/ELR seatbelt

⚠ WARNING

- **Child restraint systems and seatbelts can become hot in a vehicle that has been closed up in sunny weather; they could burn a small child. Check the child restraint system before you place a child in it.**
- **Do not leave an unsecured child restraint system in your vehicle. Unsecured child restraint systems can be thrown around inside of the vehicle in a sudden stop, turn or accident; they can strike and injure vehicle occupants as well as result in serious injuries or death to the child.**

CAUTION

- **When you install a child restraint system, follow the manufacturer's instructions supplied with it. After installing the child restraint system, check to ensure that it is held securely in position. If it is not held tight and secure, the danger of your child suffering personal injury in the event of an accident may be increased.**
- **When installing a child restraint system in the rear center seating position, adjust both seatbacks at the same angle. Otherwise, the child restraint system cannot be securely restrained, causing death or serious injuries in the event of sudden stop, sudden steering maneuver or an accident.**

▼ Installing a rearward facing child restraint

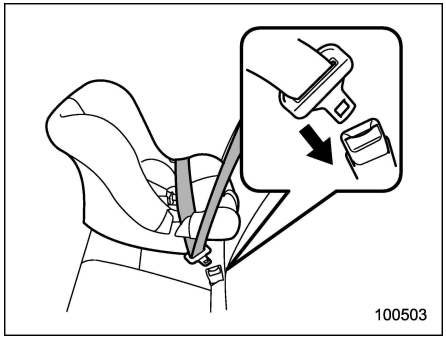

1. Place the child restraint system in the rear seating position.
2. Run the lap and shoulder belt through or around the child restraint system following the instructions provided by its manufacturer.
3. Insert the tongue plate into the buckle until you hear a click.

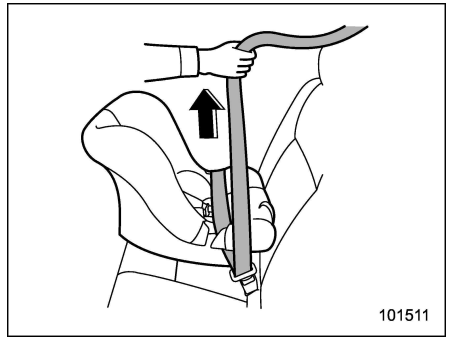

4. Take up the slack in the lap belt.
5. If using the seatbelt in the ALR mode is recommended by the manufacturer's instructions supplied with the child restraint system, perform the following procedure.

(1) Pull out the seatbelt fully from the retractor to change the retractor over from the Emergency Locking Retractor (ELR) to the Automatic Locking Retractor (ALR) mode.

(2) Allow the belt to rewind into the retractor. As the belt is rewinding, clicks will be heard which indicate the retractor functions as ALR.

– CONTINUED –

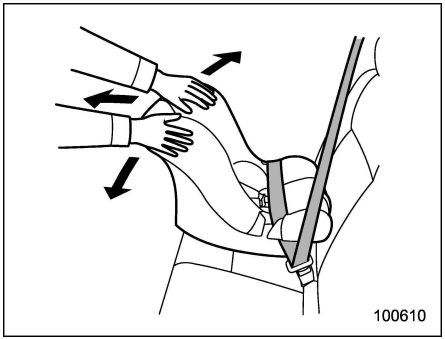

6. Push and pull the child restraint system forward and side to side to check that it is firmly secured in the center of the seat. Sometimes a child restraint can be more firmly secured by pushing it down into the seat cushion and then tightening the seatbelt.

7. If the seatbelt has been set to the ALR mode in step 5, pull at the shoulder portion of the belt to confirm that it cannot be pulled out (ALR properly functioning).

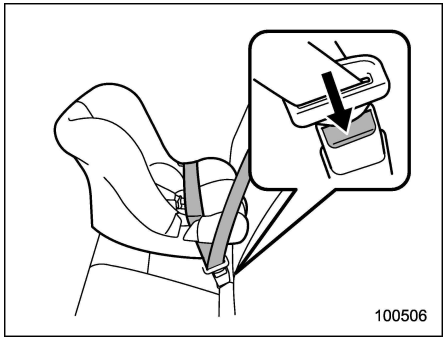

8. To remove the child restraint system, press the release button on the seatbelt buckle and allow the belt to retract completely. The belt will return to the ELR mode.

⚠ WARNING

NEVER INSTALL A REARWARD FACING CHILD SEAT IN THE FRONT PASSENGER'S SEAT. DOING SO RISKS SERIOUS INJURY OR DEATH TO THE CHILD BY PLACING THE CHILD'S HEAD TOO CLOSE TO THE SRS AIRBAG.

NOTE

When the child restraint system is no longer in use, remove it and restore the ELR function of the retractor. That function is restored by retracting the seatbelt fully.

▼ Installing forward facing child restraint

⚠ WARNING

Before installing a child restraint system, be sure to confirm that the seatback is securely locked into place. Otherwise, in an accident, serious injury or death could result.

1. Shake the seatback slightly to confirm that it is securely locked into place.

2. If the child restraint system makes contact with the head restraint of the rear seating position where the child restraint system is to be installed, raise the head restraint to the extended position. If the child restraint system still makes contact, remove the head restraint. For details, refer to "Head restraint adjustment" ☞1-14.

CAUTION

Store the head restraint that has been removed in the trunk or cargo area. Avoid placing the head restraint in the passenger compartment to prevent it from being thrown around in the passenger compartment in a sudden stop or a sharp turn.

3. For the Outback, adjust the seatback to the upright position.
4. Place the child restraint system in the rear seating position.

WARNING

When you intend to install a child restraint system on the rear center seating position, if the child restraint system does not fit snugly against the contours of the rear center seat cushion, install the child restraint system on the window-side seating position to be safe. For details, refer to "Where to place a child restraint system" ☞1-28.

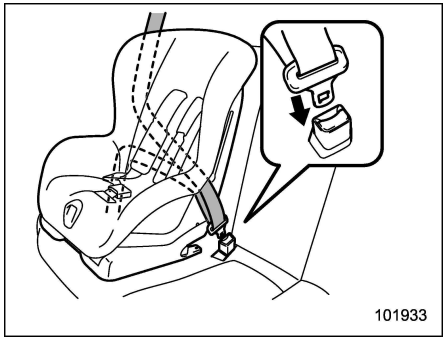

5. Run the lap and shoulder belt through or around the child restraint system following the instructions provided by its manufacturer.
6. Insert the tongue plate into the buckle until you hear a click.

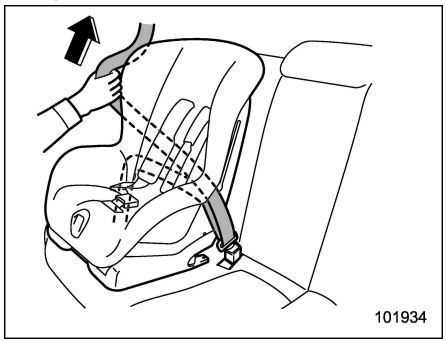

7. Take up the slack in the lap belt.
8. Pull out the seatbelt fully from the retractor to change the retractor over from the Emergency Locking Retractor (ELR) to the Automatic Locking Retractor (ALR) function. Then, allow the belt to rewind into the retractor. As the belt is rewinding, clicks will be heard which indicate the retractor functions as ALR.

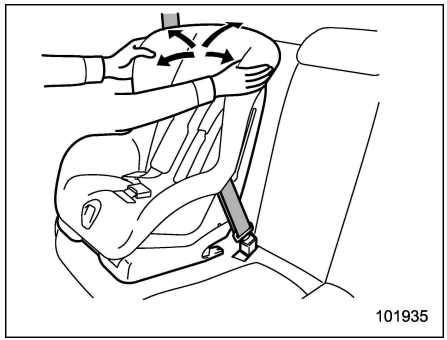

9. Before seating a child in the child restraint system, try to move it back and forth and left and right to verify that it is firmly secured in the center of the seat. Sometimes a child restraint can be more firmly secured by pushing it down into the seat cushion and then tightening the seatbelt.
10. Pull at the shoulder portion of the belt to confirm that it cannot be pulled out (ALR

– CONTINUED –

properly functioning).

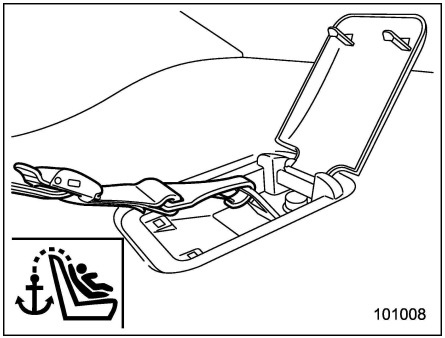

Legacy

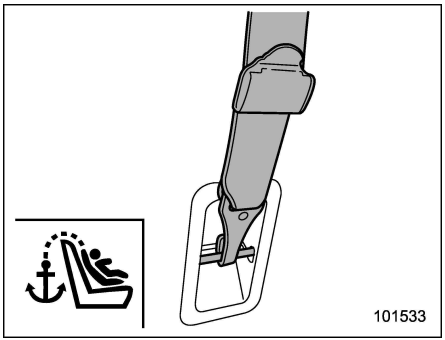

Outback

11. If the child restraint system requires a top tether, latch the hook onto the top tether anchor and tighten the top tether. For additional instructions, refer to “Top tether anchorages” ☞1-39.

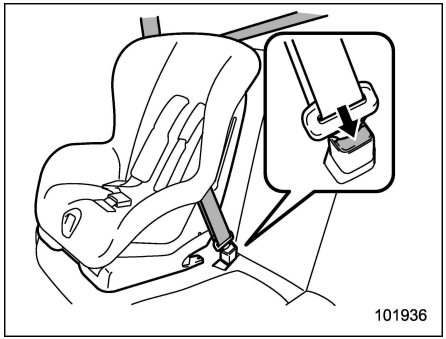

12. To remove the child restraint system, press the release button on the seatbelt buckle and allow the belt to retract completely. The belt will return to the ELR mode.

NOTE

When the child restraint system is no longer in use, remove it and restore the ELR function of the retractor. That function is restored by allowing the seatbelt to retract fully.

■ Installing a booster seat

⚠ WARNING

- **Child restraint systems and seatbelts can become hot in a vehicle that has been closed up in sunny weather; they could burn a small child. Check the child restraint system before you place a child in it.**
- **Do not leave an unsecured child restraint system in your vehicle. Unsecured child restraint systems can be thrown around inside of the vehicle in a sudden stop, turn or accident; they can strike and injure vehicle occupants as well as result in serious injuries or death to the child.**

CAUTION

When you install a child restraint system, follow the manufacturer's instructions supplied with it. After installing the child restraint system, check to ensure that it is held securely in position. If it is not held tight and secure, the danger of your child suffering personal injury in the event of an accident may be increased.

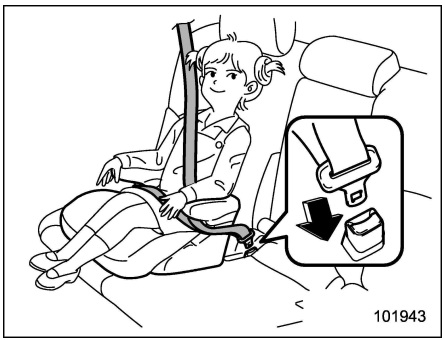

1. Place the booster seat in the rear seating position and sit the child on it. The child should sit well back on the booster seat.
2. Run the lap and shoulder belt through or around the booster seat and the child following the instructions provided by its manufacturer.
3. Insert the tongue plate into the buckle until you hear a click. Take care not to twist the seatbelt.

Make sure the shoulder belt is positioned across the center of child's shoulder and that the lap belt is positioned as low as possible on the child's hips.

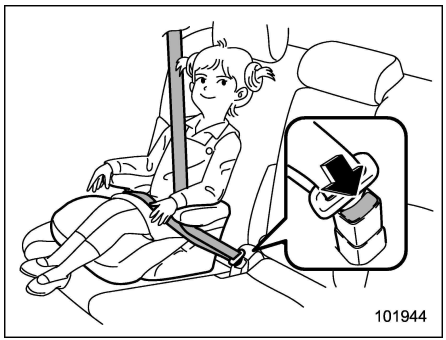

4. To remove the booster seat, press the release button on the seatbelt buckle and allow the belt to retract.

WARNING

- **Never use a belt that is twisted or reversed. In an accident, this can increase the risk or severity of injury to the child.**
- **Never place the shoulder belt under the child's arm or behind the child's back. If an accident occurs, this can increase the risk or severity of injury to the child.**
- **The seatbelt should fit snugly in order to provide full restraint. Loose fitting belts are not as effective in preventing or reducing injury.**
- **Place the lap belt as low as possible on the child's hips. A high-positioned lap belt will increase the risk of sliding under the lap belt and of the lap belt sliding up over the abdomen, and both can result in serious internal injury or death.**
- **Make sure the shoulder belt is positioned across the center of child's shoulder. Placing the shoulder belt over the neck may result in neck injury during sudden braking or in a collision.**

– CONTINUED –

Installation of child restraint systems by use of lower and tether anchorages (LATCH)

WARNING

- **Child restraint systems and seatbelts can become hot in a vehicle that has been closed up in sunny weather; they could burn a small child. Check the child restraint system before you place a child in it.**
- **Do not leave an unsecured child restraint system in your vehicle. Unsecured child restraint systems can be thrown around inside of the vehicle in a sudden stop, turn or accident; they can strike and injure vehicle occupants as well as result in serious injuries or death to the child.**

CAUTION

When you install a child restraint system, follow the manufacturer's instructions supplied with it. After installing the child restraint system, check to ensure that it is held securely in position. If it is not held tight and secure, the danger of your child suffering personal injury in the event of an accident may be increased.

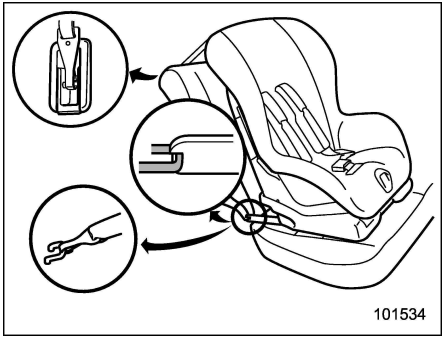

Some types of child restraint systems can be installed on the rear seat of your vehicle without use of the seatbelts. Such child restraint systems are secured to the dedicated anchorages provided on the vehicle body.

The lower and tether anchorages are sometimes referred to as the LATCH system (**L**ower **A**nchors and **T**ethers for **CH**ildren).

Your vehicle is equipped with four lower anchorages (bars) and three upper anchorages (tether anchorages) for accommodating such child restraint systems.

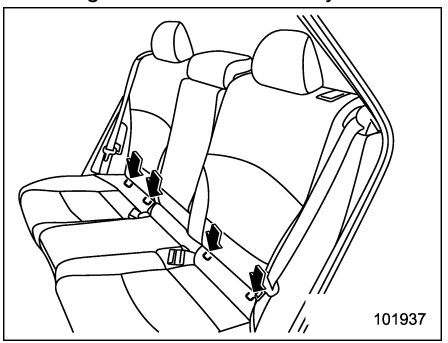

The lower anchorages (bars) are used for installing a child restraint system only on

the rear seat window-side seating positions. For each window-side seating position, two lower anchorages are provided.

Each lower anchorage is located behind the cover of seatback bottom.

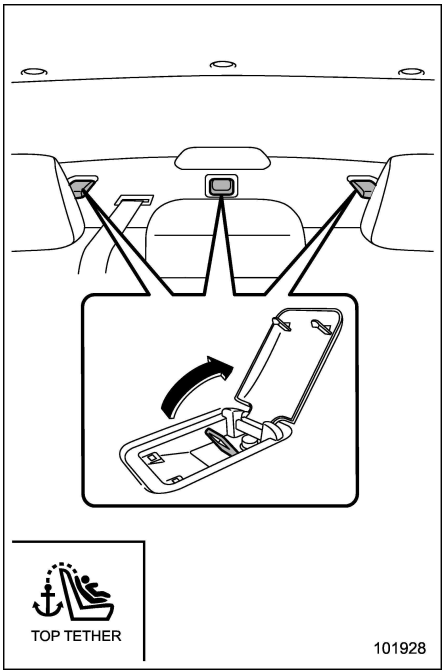

Legacy

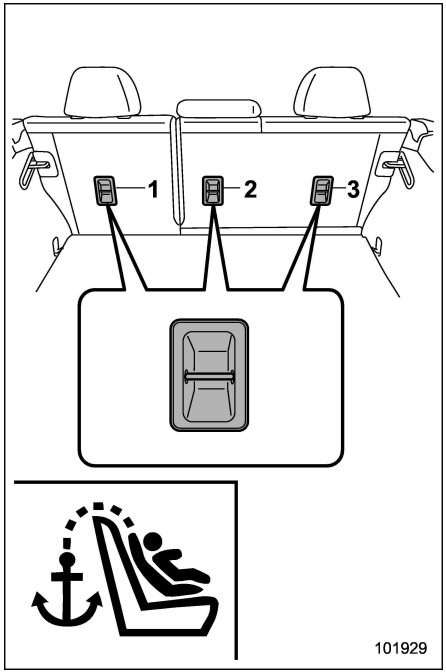

Outback

1) For left seat
2) For center seat
3) For right seat

The tether anchorages (upper anchorages) are provided for all the seating positions (center and both window-side ones) of the rear seat.

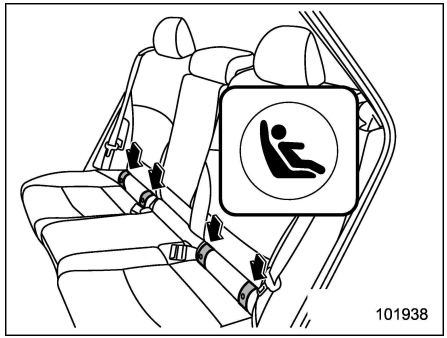

You will find marks "" at the rear seat cushion. These marks indicate the positions of the lower anchorages (bars).

Each lower anchorage is located behind the cover of seatback bottom.

⚠ CAUTION

When you install a child restraint system, follow the manufacturer's instructions supplied with it. After installing the child restraint system, check to ensure that it is held securely in position. If it is not held tight and secure, the danger of your child suffering personal injury in the event of an accident may be increased.

– CONTINUED –

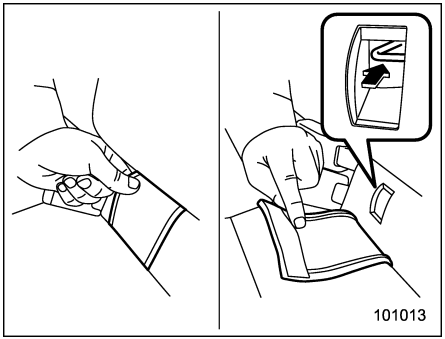

Peel off the anchorage cover from the selected side of the rear seatback to expose the anchorages (bars) to be used for installation of the child restraint system.

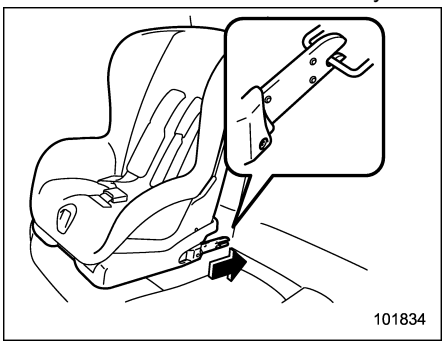

1. While following the instructions supplied by the child restraint system manufacturer, connect the lower hooks onto the lower anchorages located at "" marks on the bottom of the rear seatback. When the hooks are connected, make sure the adjacent seatbelts are not caught.

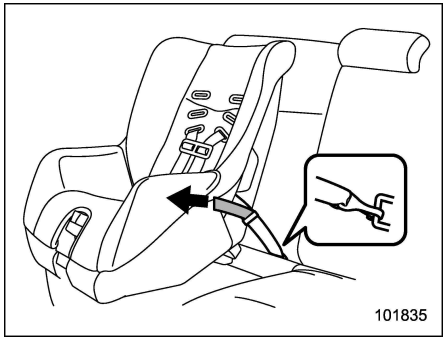

2. If your child restraint system is of a flexible attachment type (which uses tether belts to connect the child restraint system properly to the lower anchorages), while pushing the child restraint into the seat cushion, pull both left and right lower tether belts up to secure the child restraint system firmly by taking up the slack in the belt.

3. Connect the top tether hook to the tether anchorage and firmly tighten the tether. For information on how to set the top tether, refer to "Top tether anchorages" ☞1-39.

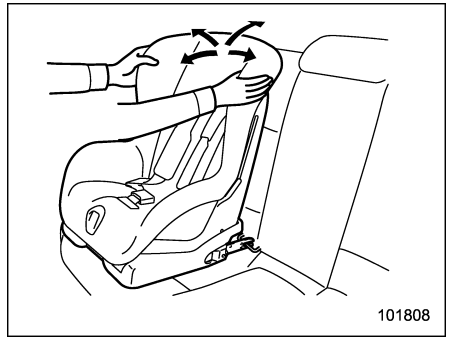

4. Before seating a child in the child restraint system, try to move it back and forth and left and right to verify that it is firmly secured in the center of the seat.

5. To remove the child restraint system, follow the reverse procedures of installation.

If you have any question concerning this type of child restraint system, ask your SUBARU dealer.

■ Top tether anchorages

Your vehicle is equipped with three top tether anchorages so that a child restraint system having a top tether can be installed in the rear seat. When installing a child restraint system using top tether, proceed as follows, while observing the instructions by the child restraint system manufacturer.

Since a top tether can provide additional stability by offering another connection between a child restraint system and the vehicle, we recommend that you use a top tether whenever one is required or available.

▼ Tether anchorage location

▽ Legacy

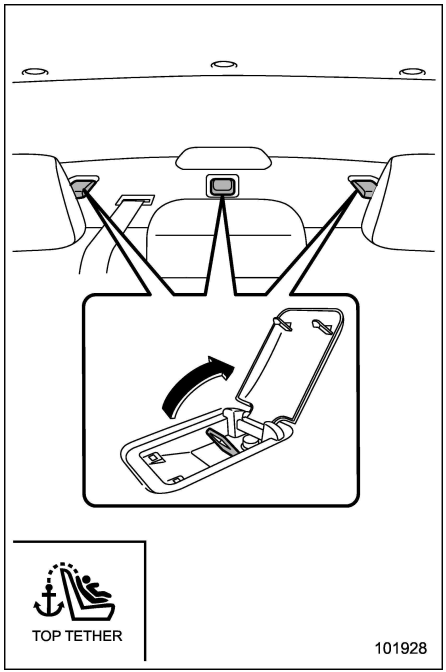

Three tether anchorages are installed on the rear shelf behind the rear seat head restraint. Open the cover flap to use each anchorage.

▽ Outback

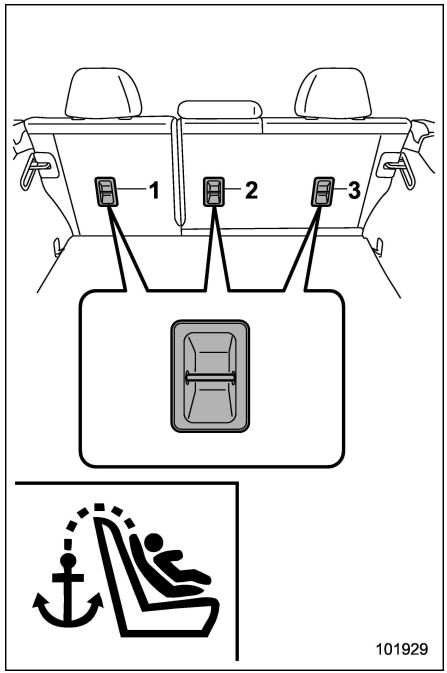

1) For left seat
2) For center seat
3) For right seat

Three tether anchorages, i.e., ones for the right, center and left positions, are already

– CONTINUED –

installed on the back side of the rear seatback.

▼ **To hook the top tether**

⚠ CAUTION

Always raise the head restraint when mounting a child restraint system with a top tether. Failure to do so may prevent the top tether from being fastened tightly.

▽ **Legacy**

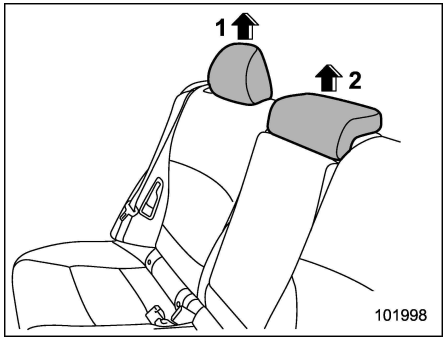

1) When installing on the window-side seating position
2) When installing on the rear center seating position

1. Raise the head restraint at the seating position where the child restraint system is to be installed with the seatbelt or lower anchorages.

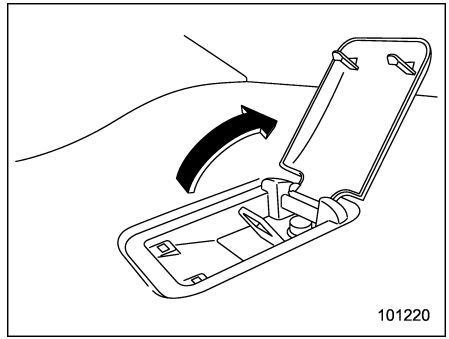

2. Open the cover flaps to use the anchorages.
3. Pass the top tether between the head restraint and seatback.

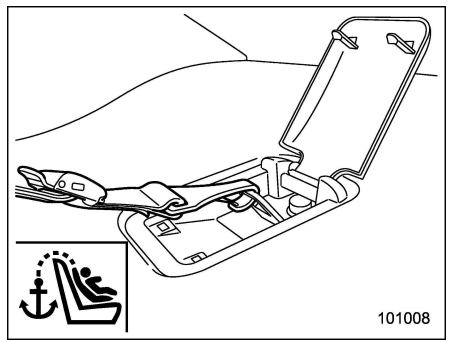

4. Fasten the top tether hook of the child restraint system to the appropriate upper

anchorage.
5. Tighten the top tether securely.

▽ **Outback**

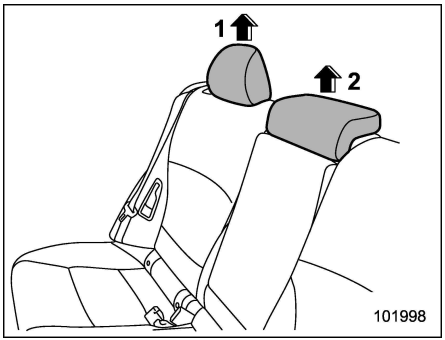

1) When installing on the window-side seating position
2) When installing on the rear center seating position

1. Raise the head restraint at the seating position where the child restraint system is to be installed with the seatbelt or lower anchorages.
2. Adjust the seatback to the upright position.
3. Pass the top tether between the head restraint and seatback.

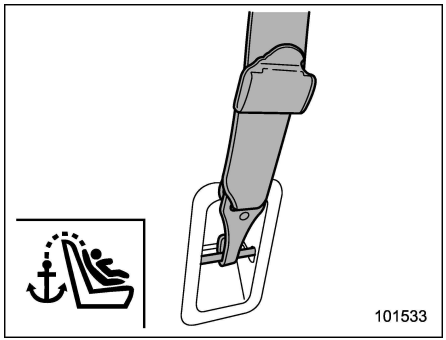

4. Attach the top tether hook to the appropriate upper anchorage.
5. Tighten the top tether securely.

*SRS airbag (Supplemental Restraint System airbag)

*SRS: This stands for Supplemental Restraint System. This name is used because the airbag system supplements the vehicle's seatbelts.

Your vehicle is equipped with a supplemental restraint system in addition to a lap/shoulder belt at each front seating position and each rear window-side seating position. The supplemental restraint system (SRS) consists of the following airbags.

- Driver's and front passenger's **frontal** airbags
- Driver's and front passenger's **side** airbags
- Driver's and front passenger's **seat cushion** airbags
- **Curtain** airbags (for driver, front passenger, and window-side rear passengers)

These SRS airbags are designed only to be a supplement to the primary protection provided by the seatbelt.

The system also controls front seatbelt pretensioners. For operation instructions and precautions concerning the seatbelt pretensioner, refer to "Front seatbelt pre-

– CONTINUED –

tensioners” ☞1-24.

■ General precautions regarding SRS airbag system

⚠ WARNING

- **To obtain maximum protection in the event of an accident, the driver and all passengers must always wear seatbelts when in the vehicle. The SRS airbag is designed only to be a supplement to the primary protection provided by the seatbelt. It does not eliminate the need to fasten seatbelts. In combination with the seatbelts, it offers the best combined protection in case of a serious accident.**

  Not wearing a seatbelt increases the chance of severe injury or death in a crash even when the vehicle has the SRS airbag.

  For instructions and precautions concerning the seatbelt system, refer to “Seatbelts” ☞1-16.
- **The SRS side airbag and SRS curtain airbag are designed only to be a supplement to the primary protection provided by the seatbelt. They do not eliminate the need to fasten seatbelts. It is also important to wear your seatbelt to help avoid injuries that can result when an occupant is not seated in a proper upright position.**

⚠ WARNING

- **The SRS airbags deploy with considerable speed and force. Occupants who are out of proper position when the SRS airbag deploys could suffer very serious injuries. Because the SRS airbag needs enough space for deployment, the driver should always sit upright and well back in the seat as far from the steering wheel as practical while still maintaining full vehicle control and the front passenger should move the seat as far back as possible and sit upright and well back in the seat.**

⚠ WARNING

- **Do not sit or lean unnecessarily close to either front door. The SRS side airbags are stored in both front seat seatbacks next to the door, and they provide protection by deploying rapidly (faster than the blink of an eye) in the event of a side impact collision. However, the force of SRS side airbag deployment may cause injuries if your head or other parts of the body are too close**

to the SRS side airbag.

- Since your vehicle is equipped with SRS curtain airbags, do not sit or lean unnecessarily close to the front or rear door on either side. Also, do not put your head, arms or hands out of the window. The SRS curtain airbags on both sides of the cabin are stored in the roof side (between the front pillar and a point over the rear seat), and they provide protection by deploying rapidly (faster than the blink of an eye) in the event of a side impact, a rollover or an offset frontal collision depending on circumstances. However, the force of its deployment may cause injuries if your head is too close to it.
- Do not sit or lean unnecessarily close to the SRS airbag. Because the SRS airbag deploys with considerable speed (faster than the blink of an eye) and force to protect in high speed collisions, the force of an airbag can injure an occupant whose body is too close to SRS airbag.

  It is also important to wear your seatbelt to help avoid injuries that can result when the SRS airbag contacts an occupant not in proper position such as one thrown forward during pre-accident braking.

  Even when properly positioned, there remains a possibility that an occupant may suffer minor injury such as abrasions and bruises to the face or arms because of the SRS airbag deployment force.

WARNING

- Do not rest your arm on either front door or its internal trim. You could be injured in the event of SRS side airbag deployment.
- Do not place any objects over or near the SRS airbag cover or between you and the SRS airbag. If the SRS airbag deploys, these objects could interfere with its proper operation and could be propelled inside the vehicle, causing injury.

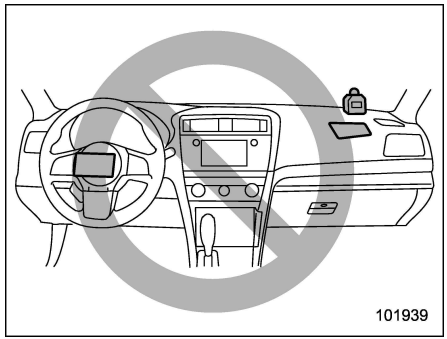

– CONTINUED –

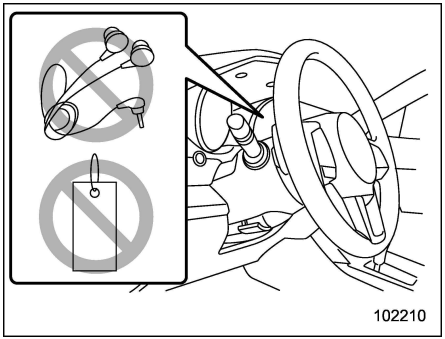

⚠ WARNING

- **Do not put any objects (including straps or cord) over the steering wheel pad, column cover, or dashboard.**
  - **These objects could be entangled with the steering wheel, preventing the SRS frontal airbag, etc. from operating properly.**
  - **If the SRS frontal airbag deploys, these objects could be propelled inside the vehicle, causing injury.**

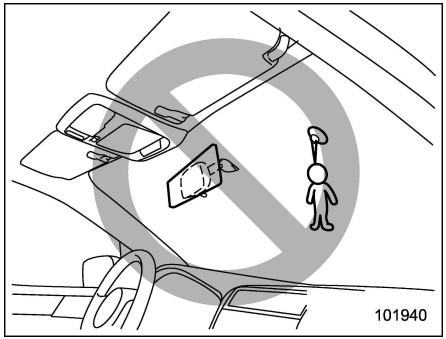

⚠ WARNING

Do not attach accessories to the windshield, or fit an extra-wide mirror over the inside rear view mirror. If the SRS airbag deploys, those objects could become projectiles that could seriously injure vehicle occupants.

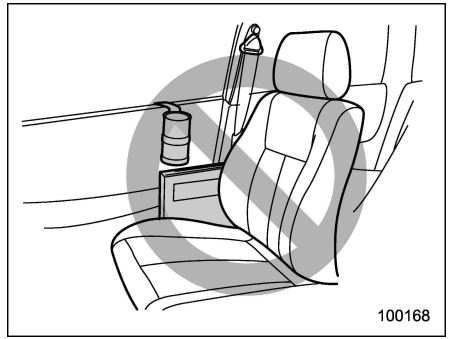

⚠ WARNING

- **Do not attach accessories to the door trim or near either SRS side airbags and do not place objects near the SRS side airbags. In the event of SRS side airbag deployment, they could be propelled dangerously toward the vehicle's occupants and cause injuries.**
- **Do not attach a hands-free microphone or any other accessory to a front pillar, a center pillar, a rear pillar, the windshield, a side window, an assist grip, or any other cabin surface that would be near a deploying SRS curtain airbag. A hands-free microphone or other**

accessory in such a location could be propelled through the cabin with great force by the curtain airbag, or it could prevent correct deployment of the curtain airbag. In either case, the result could be serious injuries.

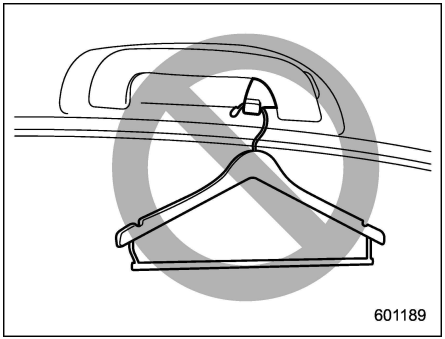

WARNING

Do not place hangers or other hard objects on the coat hooks. If such items were hanging on the coat hooks during deployment of the SRS curtain airbags, they could cause serious injuries by coming off the coat hooks and being thrown through the cabin or by preventing deployment of the curtain airbags.

Before hanging clothing on the coat hooks, make sure there are no sharp objects in the pockets. Hang clothing directly on the coat hooks without using hangers.

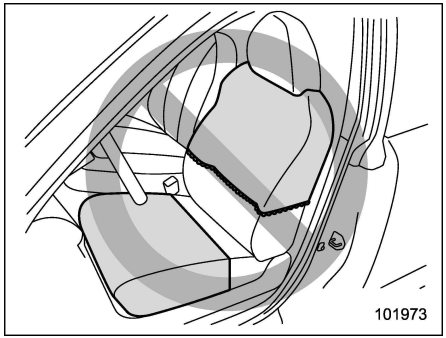

WARNING

Do not put any kind of cover or clothes or other objects over either front seatback/seat cushion and do not attach labels or stickers to the front seat surface on or near the SRS side airbag/SRS seat cushion airbag. They could prevent proper deployment of the SRS side airbag/SRS seat cushion airbag, reducing protection available to the front seat's occupant.

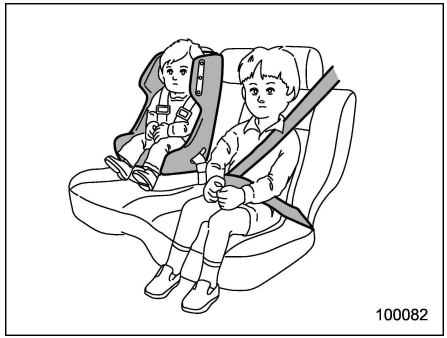

WARNING

Put children in the rear seat properly restrained at all times. The SRS airbag deploys with considerable speed and force and can injure or even kill children, especially if they are not restrained or improperly restrained. Because children are lighter and weaker than adults, their risk of being injured from deployment is greater.

Consequently, we strongly recommend that ALL children (including those in child seats and those that have outgrown child restraint devices) sit in the REAR seat properly restrained at all times in a child restraint device or in a seatbelt,

– CONTINUED –

whichever is appropriate for the child's age, height and weight.

Secure ALL types of child restraint devices (including forward facing child seats) in the REAR seats at all times.

According to accident statistics, children are safer when properly restrained in the rear seating positions than in the front seating positions.

For instructions and precautions concerning the child restraint system, refer to "Child restraint systems" ☞1-27.

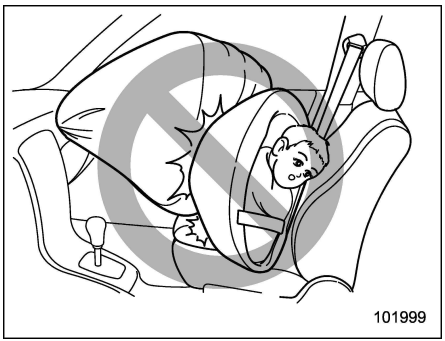

⚠ WARNING

NEVER INSTALL A REARWARD FACING CHILD SEAT IN THE FRONT SEAT. DOING SO RISKS SERIOUS INJURY OR DEATH TO THE CHILD BY PLACING THE CHILD'S HEAD TOO CLOSE TO THE SRS AIRBAG.

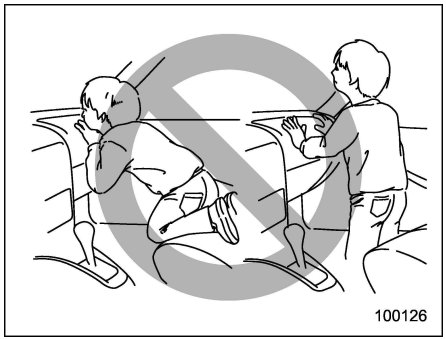

⚠ WARNING

Never allow a child to stand up or kneel on the front passenger's seat. The SRS airbag deploys with considerable force and can injure or even kill the child.

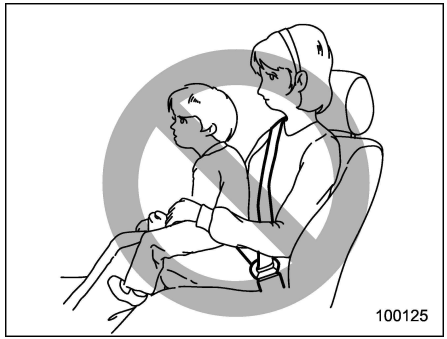

⚠ WARNING

Never hold a child on your lap or in your arms. The SRS airbag deploys with considerable force and can injure or even kill the child.

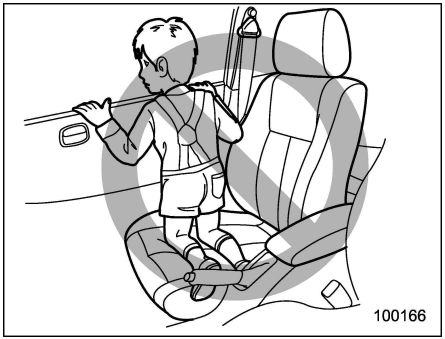

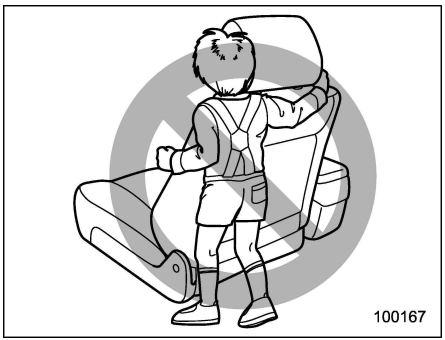

WARNING

- **Never allow a child to do the following.**
  - **Kneel on any passenger's seat facing the side window**
  - **Wrap his/her arms around the front seat seatback**
  - **Put his/her head, arms or other parts of the body out of the window**

  In the event of an accident, the force of SRS side airbag and/or SRS curtain airbag deployment could injure the child seriously because his/her head, arms or other parts of the body are too close to the SRS side airbag and/or SRS curtain airbag.
- **Since your vehicle is also equipped with a front passenger's SRS frontal airbag, children should be placed in the rear seat anyway and should be properly restrained at all times.**

CAUTION

- **When the SRS airbag deploys, some smoke will be released. This smoke could cause breathing problems for people with a history of asthma or other breathing trouble. If you or your passengers have breathing problems after SRS airbag deploys, get fresh air promptly.**
- **A deploying SRS airbag releases hot gas. Occupants could get burned if they come into direct contact with the hot gas.**

NOTE

- **When you sell your vehicle, we urge you to inform the buyer that the vehicle is equipped with SRS airbags. Also, notify the buyer of the applicable section in this Owner's Manual.**
- **If the SRS airbag deploys, fuel supply will be cut off to reduce the risk of fire caused by leaking fuel. For details about restarting of the engine, refer to "If your vehicle is involved in an accident" ☞9-23.**

– CONTINUED –

■ Components

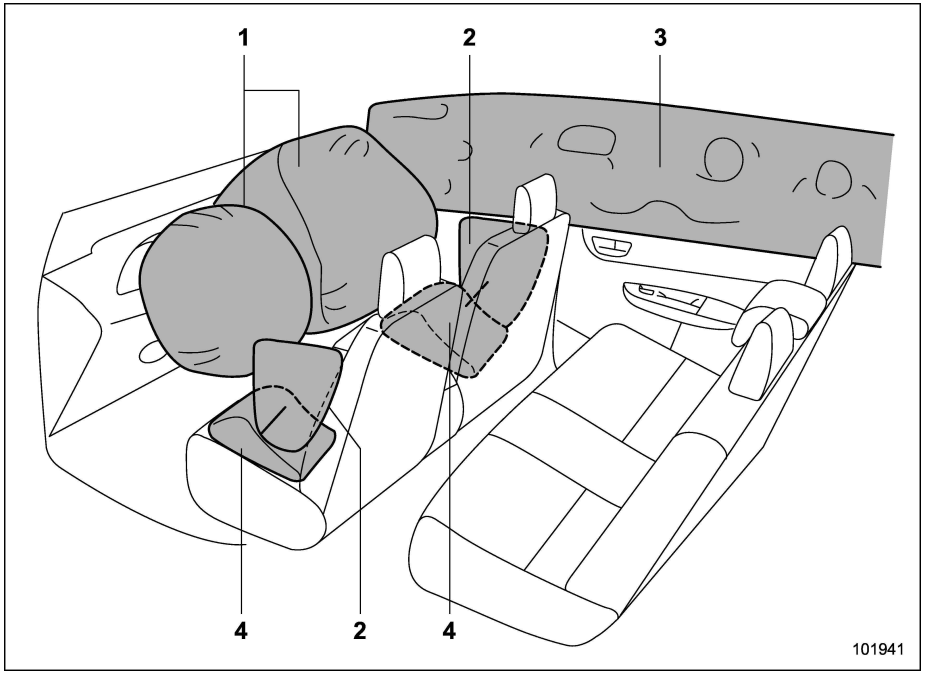

1) SRS frontal airbag
2) SRS side airbag
3) SRS curtain airbag
4) SRS seat cushion airbag

The SRS airbags are stowed in the following locations.

Driver's SRS frontal airbag: in the center portion of the steering wheel

Front passenger's SRS frontal airbag: near the top of the dashboard under an "SRS AIRBAG" mark

SRS side airbag: in the trim cover on the door side of each front seat cushion that bears an "SRS AIRBAG" mark

SRS curtain airbag: in the roof side (between the front pillar and a point over the rear seat)
An "SRS AIRBAG" mark is located at the top of each center pillar.

SRS seat cushion airbag: in the center console side of the front seat cushion that bears an "SRS AIRBAG" label

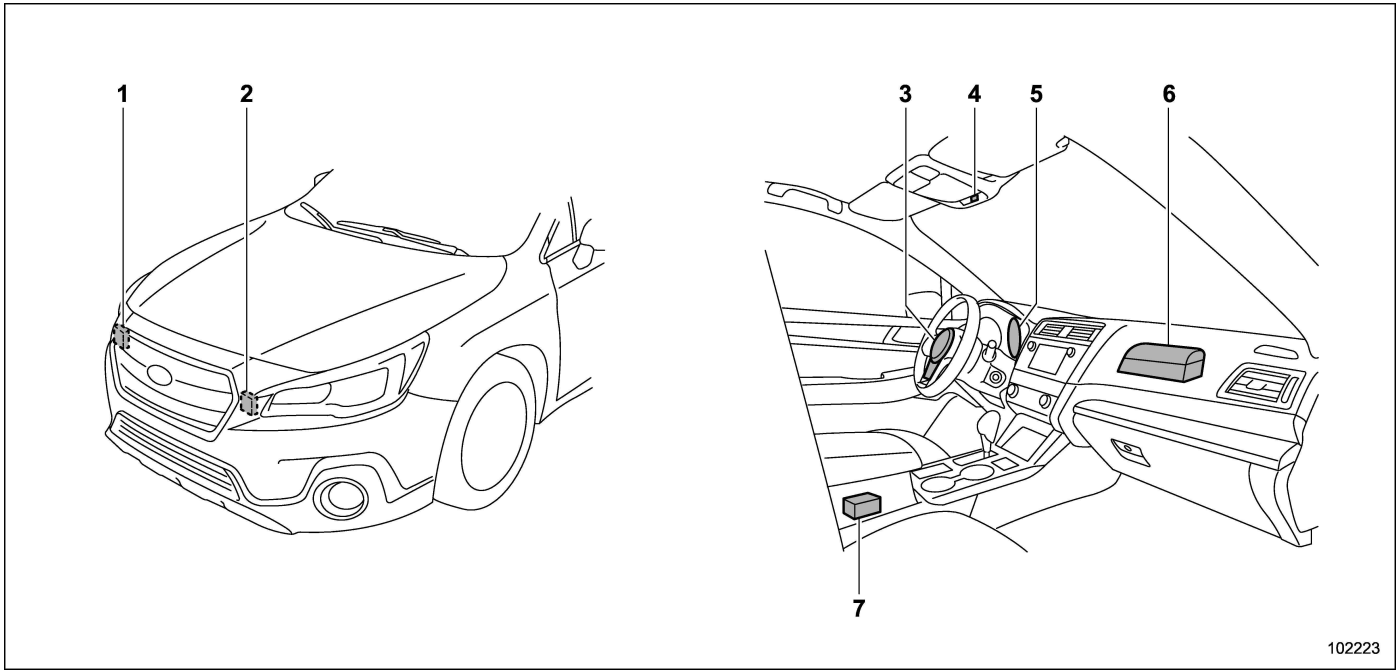

1) Front sub sensor (right-hand side)
2) Front sub sensor (left-hand side)
3) Frontal airbag module (driver's side)
4) Front passenger's frontal airbag ON and OFF indicator
5) SRS airbag system warning light
6) Frontal airbag module (front passenger's side)
7) Airbag control module (including impact sensor and rollover sensor)

– CONTINUED –

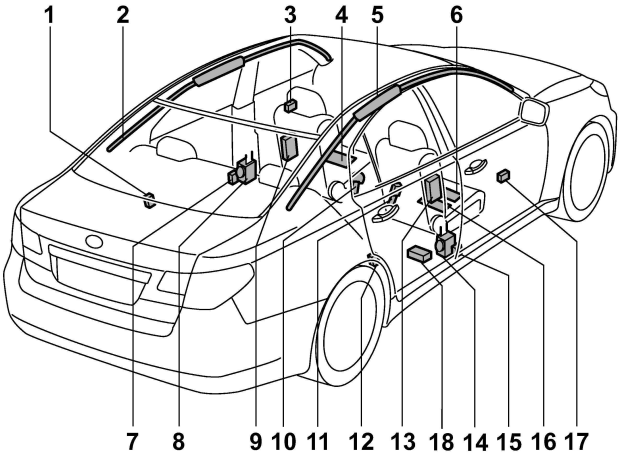
1
2
3
4
5
6
7
8
9
10
11
12
13
18
14
15
16
17

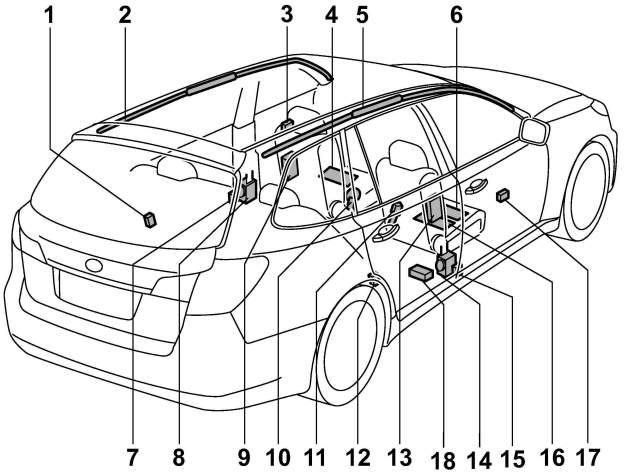
1
2
3
4
5
6
7
8
9
10
11
12
13
18
14
15
16
17

102018

1) Curtain airbag sensor (rear wheel house left-hand side)
2) Curtain airbag module (left-hand side)
3) Front door impact sensor (left-hand side)
4) Seat cushion airbag module (driver's side)
5) Curtain airbag module (right-hand side)
6) Seat cushion airbag module (front passenger's side)
7) Side airbag sensor (center pillar left-hand side)
8) Seatbelt pretensioner (left-hand side)
9) Side airbag module (left-hand side)
10) Seatbelt buckle switch (left-hand side)
11) Seatbelt buckle switch (right-hand side)
12) Curtain airbag sensor (rear wheel house right-hand side)
13) Side airbag module (right-hand side)
14) Seatbelt pretensioner (right-hand side)
15) Side airbag sensor (center pillar right-hand side)
16) Front passenger's occupant detection system sensor and control module
17) Front door impact sensor (right-hand side)
18) Front passenger's seatbelt tension sensor

■ SUBARU advanced frontal airbag system, SRS seat cushion airbag, SRS side airbag and SRS curtain airbag

Your vehicle is equipped with a SUBARU advanced frontal airbag system that complies with the new advanced frontal airbag requirements in the amended Federal Motor Vehicle Safety Standard (FMVSS) No. 208.

The SUBARU advanced frontal airbag system automatically determines the deployment force of the driver's SRS frontal airbag at the time of deployment as well as whether or not to activate the front passenger's SRS frontal airbag and, if activated, the deployment force of the SRS frontal airbag at the time of deployment.

Your vehicle has warning labels on the driver's and front passenger's sun visors beginning with the phrase "EVEN WITH ADVANCED AIR BAGS" and a tag attached to the glove box lid beginning with the phrase "Even with Advanced Air Bags". Make sure that you carefully read the instructions on the warning labels and tag.

Always wear your seatbelt. The SUBARU advanced frontal airbag system is a supplemental restraint system and must be used in combination with a seatbelt. All occupants should wear a seatbelt or be seated in an appropriate child restraint system.

Your vehicle is equipped with a SUBARU SRS curtain airbag system that complies with the Federal Motor Vehicle Safety Standard (FMVSS) No. 226.

For the locations of the SRS airbags, refer to "Components" ☞1-48.

In a moderate to severe frontal collision, the following components deploy.

- SRS frontal airbag for driver
- SRS frontal airbag for front passenger
- SRS seat cushion airbags
- SRS curtain airbag*1

*1: When an offset frontal collision that is severe enough to deploy the front airbag occurs.

These components supplement the seatbelts by reducing the impact to the occupant's head and chest.

In a moderate to severe side impact collision, the SRS side airbag on the impacted side of the vehicle deploys between the occupant and the door panel and supplements the seatbelt by reducing the impact to the occupant's chest and waist.

In a moderate to severe side impact

– CONTINUED –

collision, the SRS curtain airbag on the impacted side of the vehicle deploys between the occupant and the side window and supplements the seatbelt by reducing the impact to the occupant's head.

NOTE

The SRS side airbag and seatbelt pretensioner are not controlled by the SUBARU advanced frontal airbag system.

▼ Driver's SRS frontal airbag

The driver's SRS frontal airbag uses a dual stage inflator. The inflator operates in different ways depending on the severity of impact.

Have the system inspected by your SUBARU dealer immediately if the SRS airbag system warning light illuminates.

▼ Front passenger's SRS frontal airbag

The front passenger's SRS frontal airbag uses a dual stage inflator. The inflator operates in different ways depending on the severity of impact.

The total load on the seat is monitored by the passenger's occupant detection system sensor located under the seat.

The system has another sensor that monitors the tension of the front passenger's seatbelt. Using the total seat load and seatbelt tension data from the sensors, the occupant detection system determines whether the front passenger's SRS frontal airbag should or should not be inflated.

The occupant detection system may not inflate the front passenger's SRS frontal airbag even when the driver's SRS frontal airbag deploys. This is normal.

⚠ CAUTION

Observe the following precautions. Failure to do so may prevent the SUBARU advanced frontal airbag system from functioning correctly or cause the system to fail.

- **Do not apply any strong impact to the front passenger's seat such as by kicking.**
- **Do not let rear passengers rest their feet between the front seatback and seat cushion.**
- **Do not spill liquid on the front passenger's seat. If liquid is spilled, wipe it off immediately.**
- **Do not remove or disassemble the front passenger's seat.**
- **Do not install any accessory (such as an audio amplifier) other than a genuine SUBARU accessory under the front passenger's seat.**
- **Do not place anything (shoes, umbrella, etc.) under the front passenger's seat.**
- **Do not use the front passenger's seat with the head restraint removed.**
- **Do not leave any articles on the front passenger's seat or the seatbelt tongue and buckle engaged when you leave your vehicle.**
- **Do not place a magnet near the seatbelt buckle and the seatbelt retractor.**
- **Do not use front seats with their backward-forward position and seatback not being locked into place securely. If any of them are not locked securely, adjust them again. For adjusting procedure, refer to "Manual seat" ☞1-4 (models equipped with manual seats only).**

If the seatbelt buckle switch and/or front passenger's occupant detection system have failed, the SRS airbag system warn-

ing light will illuminate. Have the system inspected by your SUBARU dealer immediately if the SRS airbag system warning light illuminates.

If your vehicle has sustained impact, this may affect the proper function of the SUBARU advanced frontal airbag system. Have your vehicle inspected at your SUBARU dealer. Do not let anyone use the front passenger's seat while you are driving the vehicle to your SUBARU dealer.

▼ Passenger's frontal airbag ON and OFF indicators

Refer to "Front passenger's frontal airbag ON and OFF indicators" ☞3-14.

▼ Occupant detection system

The occupant detection system sensor is installed under the seat and monitors the total load on the front passenger's seat. The system has another sensor that monitors the tension of the front passenger's seatbelt. Using the total seat load and seatbelt tension data from the sensors, the occupant detection system determines whether the following airbags should be deployed or not.

- Front passenger's SRS frontal airbag
- Front passenger's SRS seat cushion airbag

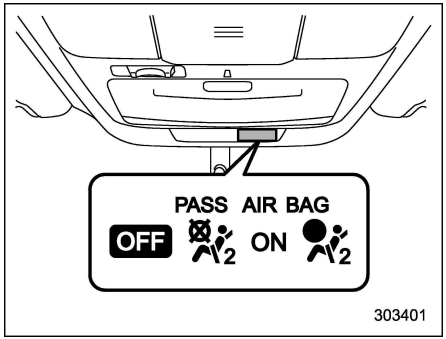

ON / : Front passenger's frontal airbag ON indicator

OFF / : Front passenger's frontal airbag OFF indicator

If the front passenger's frontal airbag ON and OFF indicators do not work properly even when the front passenger's seat is dry, do not allow anyone to sit on the front passenger's seat and have the occupant detection system checked by your SUBARU dealer.

▼ Conditions in which front passenger's SRS frontal airbag is not activated

The front passenger's SRS frontal airbag will not be activated when any of the following conditions are met regarding the front passenger's seat:

- The seat is empty.
- The seat is equipped with an appropriate child restraint system and an infant is restrained in it. (See WARNING that follows.)
- The front passenger's occupant detection system is malfunctioning.

⚠ WARNING

NEVER INSTALL A REARWARD FACING CHILD SEAT IN THE FRONT PASSENGER'S SEAT EVEN IF THE FRONT PASSENGER'S SRS FRONTAL AIRBAG IS DEACTIVATED. Be sure to install it in the REAR seat in a correct manner. Also, it is strongly recommended that any forward facing child seat or booster seat be installed in the REAR seat, and that even children who have outgrown a child restraint system be also seated in the REAR seat. This is because children sitting in the front passenger's seat may be killed or severely injured should the front passenger's SRS frontal airbag deploy. REAR seats are the safest place for children.

– CONTINUED –

⚠ CAUTION

When the front passenger's seat is occupied by an infant in an appropriate child restraint system, observe the following precautions. Failure to do so may increase the load on the front passenger's seat, activating the front passenger's SRS frontal airbag even though that seat is occupied by an infant.

- **Do not place any article on the seat other than the infant in the child restraint system.**
- **Do not place more than one infant in the child restraint system.**
- **Do not install any accessory such as a table or TV onto the seatback.**
- **Do not store a heavy load in the seatback pocket.**
- **Do not allow the rear seat occupant to place his/her hands or legs on the front passenger's seatback, or allow him/her to pull the seatback.**

▽ **If the front passenger's frontal airbag ON indicator illuminates and the OFF indicator turns off even when an infant or a small child is in a child restraint system (including booster seat)**

1. Turn the ignition switch to the "LOCK"/"OFF" position.
2. Remove the child restraint system from the seat.
3. By referring to the child restraint manufacturer's recommendations as well as the child restraint system installation procedures in "Child restraint systems" ☞1-27, correctly install the child restraint system.
4. Turn the ignition switch to the "ON" position and make sure that the front passenger's frontal airbag ON indicator turns off and the OFF indicator illuminates.

If still the ON indicator remains illuminated while the OFF indicator turns off, take the following actions.

- Ensure that no article is placed on the seat other than the child restraint system and the child occupant.
- Ensure that there is no article left in the seatback pocket.
- Ensure that the backward-forward position and seatback of front passenger's seat are locked into place securely by moving the seat back and forth. (Models equipped with manual seats only)

If the ON indicator still remains illuminated while the OFF indicator turns off after taking relevant corrective actions described above, relocate the child restraint system to the rear seat and immediately contact your SUBARU dealer for an inspection.

NOTE

When a child who has outgrown a child restraint system or a small adult is seated in the front passenger's seat, the SUBARU advanced frontal airbag system may or may not activate the front passenger's SRS frontal airbag depending on the occupant's seating posture. Children should always wear a seatbelt when sitting in the seat irrespective of whether the airbag is deactivated or activated. If the front passenger's SRS frontal airbag is activated (the ON indicator remains illuminated while the OFF indicator turns off), take the following actions.

- **Ensure that no article is placed on the seat other than the occupant.**
- **Ensure that there is no article left in the seatback pocket.**

If the ON indicator still remains illumi-

nated while the OFF indicator turns off despite the fact that the actions noted above have been taken, seat the child/small adult in the rear seat and immediately contact your SUBARU dealer for an inspection. Even if the system has passed the dealer inspection, it is recommended that on subsequent trips the child/small adult always take the rear seat.

Children who have outgrown a child restraint system should always wear the seatbelt irrespective of whether the airbag is deactivated or activated.

▼ Conditions in which front passenger's SRS frontal airbag is activated

The front passenger's SRS frontal airbag will be activated for deployment upon impact when any of the following conditions is met regarding the front passenger's seat.

- When the seat is occupied by an adult.
- When a heavy article is placed on the seat.

⚠ CAUTION

When the front passenger's seat is occupied by an adult, observe the following precautions. Failure to do so may lessen the load on the front passenger's seat, deactivating the front passenger's SRS frontal airbag despite the fact that the seat is occupied by an adult. This may result in personal injury.

- **Do not allow the rear seat occupant to lift the front passenger's seat cushion using his/her feet.**
- **Do not place any article under the front passenger's seat, or squeeze any article from behind and under the seat. This may lift the seat cushion.**
- **Do not squeeze any article between the front passenger's seat and side trim/pillar, door or center console box. This may lift the seat cushion.**

▽ If the passenger's frontal airbag OFF indicator illuminates and the ON indicator turns off even when the front passenger's seat is occupied by an adult

This can be caused by the adult incorrectly sitting in the front passenger's seat.

1. Turn the ignition switch to the "LOCK"/"OFF" position.
2. Ask the front passenger to set the seatback to the upright position, sit up straight in the center of the seat cushion, correctly fasten the seatbelt, position his/her legs out forward, and adjust the seat to the rearmost position.
3. Turn the ignition switch to the "ON" position.

If the OFF indicator remains illuminated while the ON indicator remains off, take the following actions.

1. Turn the ignition switch to the "LOCK"/"OFF" position.
2. Ensure that there is no article, book, shoe, or other object trapped under the seat, at the rear of the seat, or on the side of the seat.
3. Ensure that the backward-forward position and seatback of front passenger's seat are locked into place securely by moving the seat back and forth. (Models equipped with manual seats only)
4. Turn the ignition switch to the "ON" position and wait 6 seconds to allow the system to complete self-checking. Following the system check, both indicators turn off for 2 seconds. Now, the ON indicator should illuminate while the OFF indicator remains off.

If the OFF indicator still remains illuminated while the ON indicator remains off, ask the occupant to move to the rear seat and immediately contact your SUBARU dealer for an inspection.

– CONTINUED –

▼ How to contact the vehicle manufacturer concerning modifications for persons with disabilities that may affect the advanced airbag system

Changing or moving any parts of the front seats, seatbelts, front bumper, front side frame, instrument panel, combination meter, steering wheel, steering column, tire, suspension or floor panel can affect the operation of the SUBARU advanced airbag system. If you have any questions, you may contact the following SUBARU distributors:

<Continental U.S., Alaska and the District of Columbia>
Subaru of America, Inc.
Customer Retailer Services Department
P.O. Box 6000
Cherry Hill, NJ 08034-6000
1-800-SUBARU3 (1-800-782-2783)

<Hawaii>
Subaru Hawaii
2850 Pukoloa Street, Suite 202,
Honolulu, HI 96819-4467
808-839-2273

<Guam>
Shen's Corporation dba Prestige Automobile
491, East Marine Corps Drive, Route 1
Dededo, Guam 96921-6255
671-633-2698

<Puerto Rico>
Trebol Motors
P.O. Box 11204, San Juan, Puerto Rico 00910
787-793-2828

<Canada>
Subaru Canada, Inc.
Consumer Support Department
560 Suffolk Court, Mississauga, Ontario L5R 4J7
1-800-894-4212

There are currently no SUBARU distributors in any other U.S. territories. If you are in such an area, please contact the SUBARU distributor or dealer from which you bought your vehicle.

■ System operation

⚠ CAUTION

Do not touch the SRS airbag system components with bare hands right after deployment. Doing so can cause burns because the components can be very hot as a result of deployment.

The SRS airbags can function only when the ignition switch is in the "ON" position.

When the SRS airbag(s) deploy(s), a sudden, fairly loud inflation noise will be heard and some smoke will be released. These occurrences are a normal result of the deployment. This smoke does not indicate a fire in the vehicle.

▼ SUBARU advanced frontal airbag operation

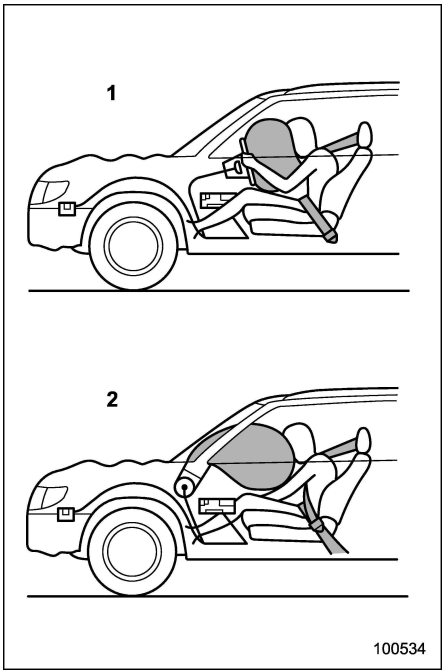

1) Driver's side
2) Passenger's side

The SUBARU advanced frontal airbag system is designed to determine the activation or deactivation condition of the front passenger's SRS frontal airbag depending on the total load on the front passenger's seat monitored by the front passenger's occupant detection system weight sensor. For this reason, only the driver's SRS frontal airbag may deploy in the event of a collision, but this does not mean failure of the system.

If the front sub sensors inside both front fenders and the impact sensors in the airbag control module detect a predetermined amount of force during a frontal collision, the control module sends signals to the airbag module(s) (only driver's module or both driver's and front passenger's modules) instructing the module(s) to inflate the SRS frontal airbag(s). The driver's and front passenger's SRS frontal airbags use dual stage inflators. The two inflators of each airbag are triggered either sequentially or simultaneously, depending on the severity of impact in the case of the driver's SRS frontal airbag and depending on the severity of impact and the total load on the seat in the case of the front passenger's SRS frontal airbag.

After deployment, the SRS airbag immediately starts to deflate so that the driver's vision is not obstructed and the driver's ability to maintain control of the vehicle is not impaired. The time required from detecting impact to the deflation of the SRS airbag after deployment is shorter than the blink of an eye.

The driver's and front passenger's seatbelt pretensioners operate at the same time in both of the following cases.

- When only the driver's SRS frontal airbag deploys
- When driver's and front passenger's SRS frontal airbags deploy

The driver's SRS frontal airbag and front passenger's SRS frontal airbag are designed to deploy in the event of an accident involving a moderate to severe frontal collision. They are not designed to deploy in most lesser frontal impacts because the necessary protection can be achieved by the seatbelt alone. Also, they are not designed to deploy in most side or rear impacts or in most rollover accidents because deployment of these airbags would not help the occupant in those situations. The driver's and front passenger's SRS frontal airbags are designed to function on a one-time-only basis.

SRS airbag deployment depends on the level of force experienced in the passenger compartment during a collision. That level differs from one type of collision to another, and it may have no bearing on the

– CONTINUED –

visible damage done to the vehicle itself.

▽ **Examples of accident in which the driver's/driver's and front passenger's SRS frontal airbag(s) will most likely deploy**

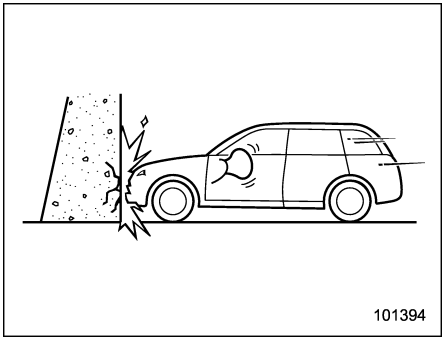

A head-on collision against a thick concrete wall at a vehicle speed of 12 to 19 mph (20 to 30 km/h) or higher activates only the driver's SRS frontal airbag or both driver's and front passenger's SRS frontal airbags. The airbag(s) will also be activated when the vehicle is exposed to a frontal impact similar in fashion and magnitude to the collision described above.

▽ **Examples of the types of accidents in which it is possible that the driver's/driver's and front passenger's SRS frontal airbag(s) will deploy**

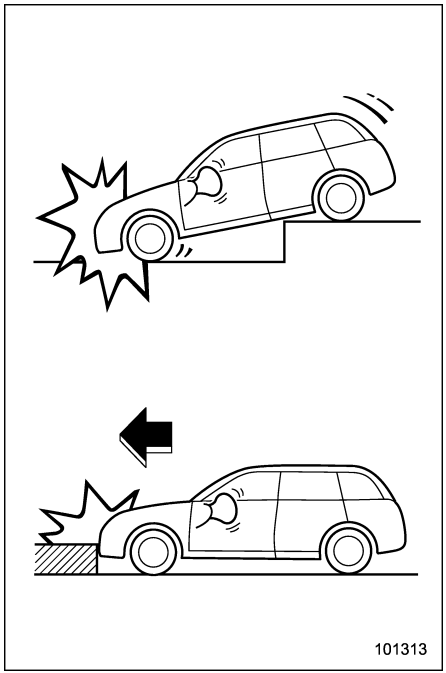

Only the driver's SRS frontal airbag or both driver's and front passenger's SRS frontal airbags may be activated when the vehicle sustains a hard impact in the undercarriage area from the road surface (such as when the vehicle plunges into a deep ditch, is severely impacted or knocked hard against an obstacle on the road such as a curb).

▽ **Examples of the types of accidents in which deployment of the driver's/driver's and front passenger's SRS frontal airbag(s) is unlikely to occur**

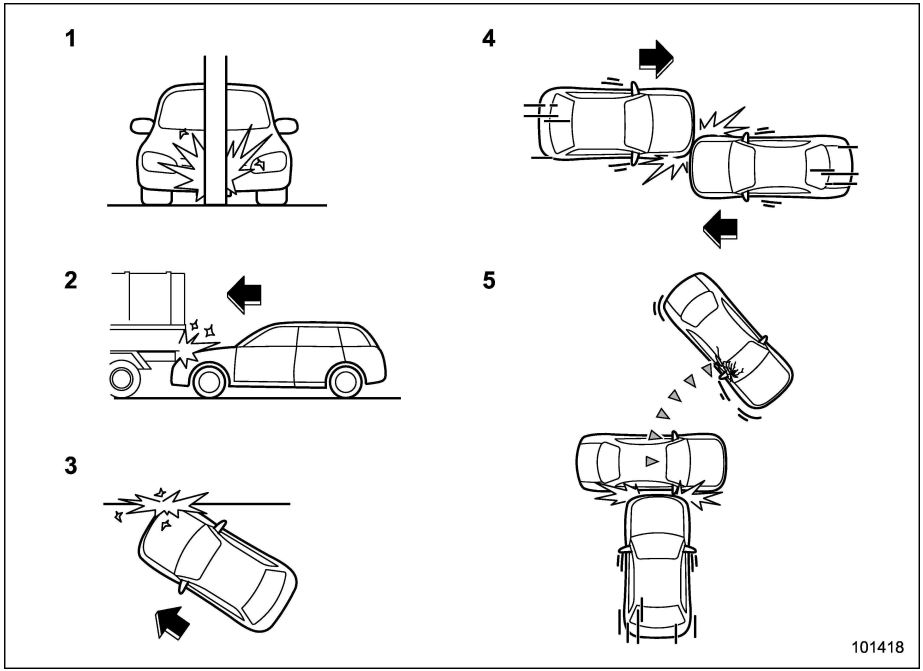

1) The vehicle strikes an object, such as a telephone pole or sign pole.
2) The vehicle slides under the load bed of a truck.
3) The vehicle sustains an oblique offset frontal impact.
4) The vehicle sustains an offset frontal collision.
5) The vehicle strikes an object that can move or deform, such as a parked vehicle.

There are many types of collisions which might not necessarily require deployment of driver's/driver's and front passenger's SRS frontal airbag(s). In the event of accidents like those illustrated, the driver's/driver's and front passenger's SRS frontal airbag(s) may not deploy depending on the level of accident forces involved.

– CONTINUED –

▽ **Examples of the types of accidents in which the driver's/driver's and front passenger's SRS frontal airbag(s) is not designed to deploy in most cases**

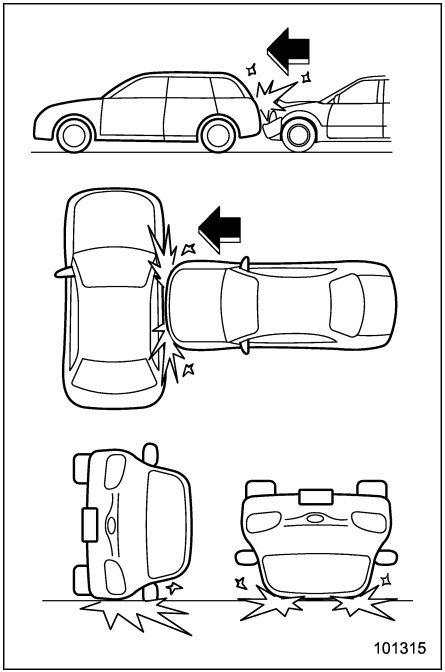

The driver's and front passenger's SRS frontal airbags are designed not to deploy in most cases if the vehicle is struck from the side or from behind, or if it rolls onto its side or roof, or if it is involved in a low-speed frontal collision.

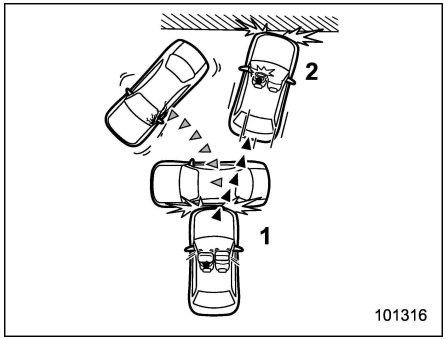

1) First impact
2) Second impact

In an accident where the vehicle is impacted more than once, the driver's and/or front passenger's SRS frontal airbag(s) will deploy only once on the first impact.

Example: In the case of a double collision, first with another vehicle, then against a concrete wall in immediate succession, once either or both of the driver's and front passenger's SRS frontal airbags is/are activated on the first impact, it/they will not be activated on the second impact.

⚠ WARNING

If the vehicle is damaged in an accident but the SRS frontal airbag does not deploy, contact your SUBARU dealer as soon as possible.

▼ SRS seat cushion airbag operation

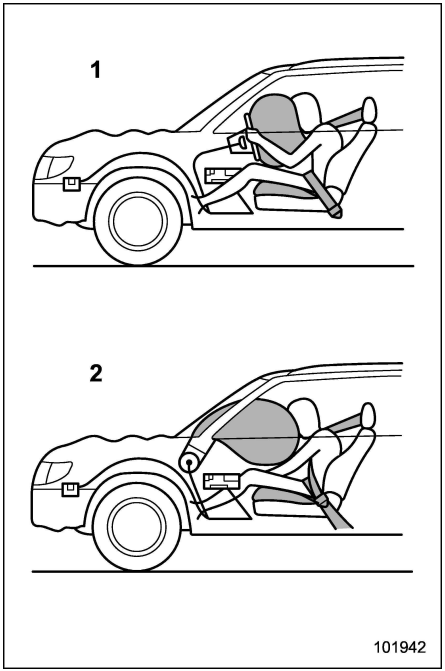

1) Driver's side
2) Passenger's side

⚠ WARNING

The SRS seat cushion airbag is designed not to deploy when the seatbelt for the corresponding seat is not fastened. For safety, all persons in the vehicle should fasten their seatbelts.

The SRS seat cushion airbags are designed to deploy simultaneously when the SRS frontal airbags deploy. For details about the operating conditions, refer to "SUBARU advanced frontal airbag operation" ☞1-57.

The front passenger's SRS seat cushion airbag is designed not to deploy in either of the following conditions.

- The front passenger's seatbelt is not fastened (even when the front passenger's frontal airbag ON indicator illuminates while the OFF indicator remains off).
- The front passenger's frontal airbag ON indicator is off while the OFF indicator illuminates.

NOTE

When the front passenger's SRS frontal airbag is deactivated by the occupant detection system, the front passenger's SRS seat cushion airbag is also deactivated.

▼ SRS side airbag and SRS curtain airbag operation

The following airbags deploy independently of each other because each has its own impact sensor.

- Driver's SRS side airbag
- Front passenger's SRS side airbag
- SRS curtain airbag (right-hand side)
- SRS curtain airbag (left-hand side)

Therefore, they may not both deploy in the same accident. Also, the SRS side airbag

– CONTINUED –

deploys independently of the driver's and front passenger's SRS frontal airbags in the steering wheel and instrument panel.

An impact sensor, which senses impact force, is located in each of the following locations.

- In the left and right front doors
- In the left and right center pillars
- In the left and right rear wheel houses
- In the airbag control module
- In the left and right front fenders (only SRS curtain airbags are designed to deploy when the front sub sensors sense a severe impact.)

A rollover sensor is also located inside the airbag control module.

If both of the following sensors together sense an impact force above a predetermined level in a side collision, the control module causes **both the SRS side airbag and curtain airbag on the impacted side** to inflate regardless of whether the rear wheel house impact sensor on the same side senses an impact.

- the impact sensor that is located in the airbag control module
- one of the center pillar impact sensors or front door impact sensors

If both of the following sensors together sense an impact force above a predetermined level in a side collision, the control module causes **only the SRS curtain airbag on the impacted side** to inflate.

- the impact sensor that is located in the airbag control module
- one of the rear wheel house impact sensors

Even if a frontal collision occurs, both right and left SRS curtain airbags will deploy when the front sensor and the control unit determine that the impact results from an offset frontal collision.

The SRS curtain airbags are designed to deploy under the following conditions.

- The driver's SRS frontal airbag deploys or the driver's and passenger's SRS frontal airbags deploy in a frontal collision.
- The system determines that the collision is an offset frontal collision.
- The vehicle is in an extremely inclined state such as during a rollover.

The SRS curtain airbags are basically not designed to deploy in the following cases.

- In a frontal collision when the SRS frontal airbags do not deploy or the system determines that the collision is other than an offset frontal collision
- In most lesser inclined states

If the rollover sensor detects rollover of the vehicle, the control module inflates the **SRS curtain airbags**. At this time, the driver's and front passenger's seatbelt pretensioners also operate at the same time.

After the deployment, the SRS side airbag immediately starts to deflate. The time required from detection of an impact to deflation of an SRS side airbag after deployment is shorter than the blink of an eye.

The SRS curtain airbag remains inflated for a while following deployment then slowly deflates.

The SRS side airbag and SRS curtain airbag deploy even when no one occupies the seat on the side on which an impact is applied.

The SRS side airbag and SRS curtain airbag are designed as follows:

- to deploy in the event of an accident involving a moderate to severe side impact collision
- to function on a one-time-only basis.

The SRS side airbag and SRS curtain airbag are not designed to deploy in the following cases:

- in most lesser side impacts

- in most rear impacts (because the SRS side airbag and SRS curtain airbag deployment would not protect the occupant in those situations)

The SRS side airbag and SRS curtain airbag deployment depend on the level of force experienced in the passenger compartment during a side impact collision. That level differs from one type of collision to another, and it may have no bearing on the visible damage done to the vehicle itself.

▽ **Example of the type of accident in which the SRS side airbag will most likely deploy**

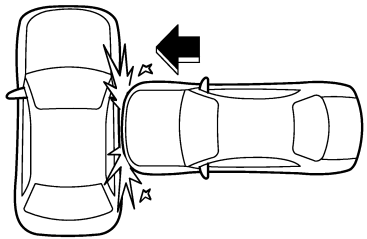

A severe side impact near the front seat or the rear seat.

– CONTINUED –

▽ **Examples of the types of accidents in which the SRS curtain airbag will most likely deploy**

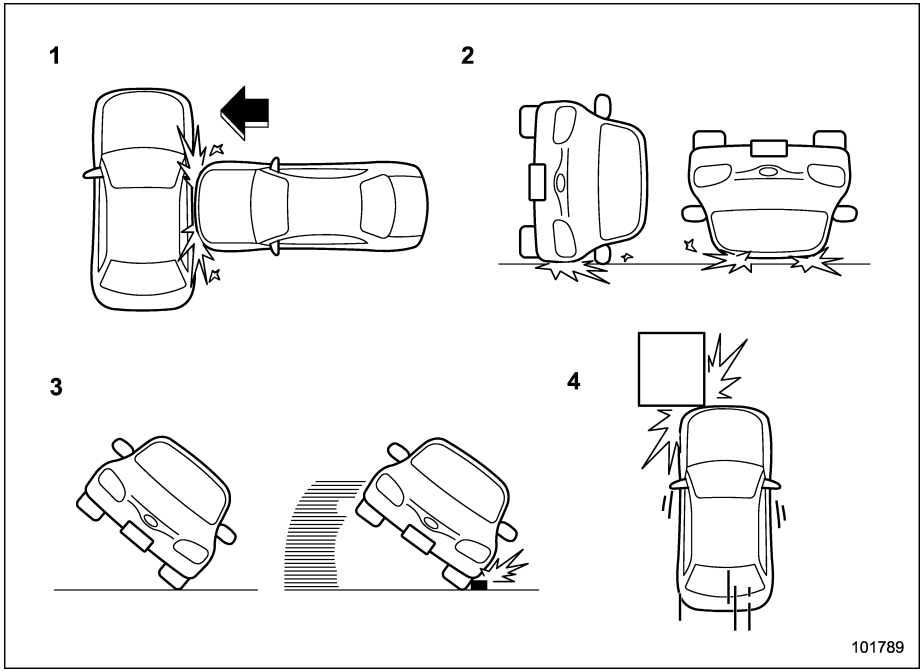

1) The vehicle is involved in a severe side impact near the front seat or the rear seat.
2) The vehicle rolls onto its side or the roof.
3) The angle of vehicle tip-up is marginal or the skidding vehicle's tires hit a curbstone laterally.
4) An offset frontal collision that is severe enough to deploy the front airbag.

▽ **Examples of the types of accidents in which it is possible that the SRS curtain airbag will deploy**

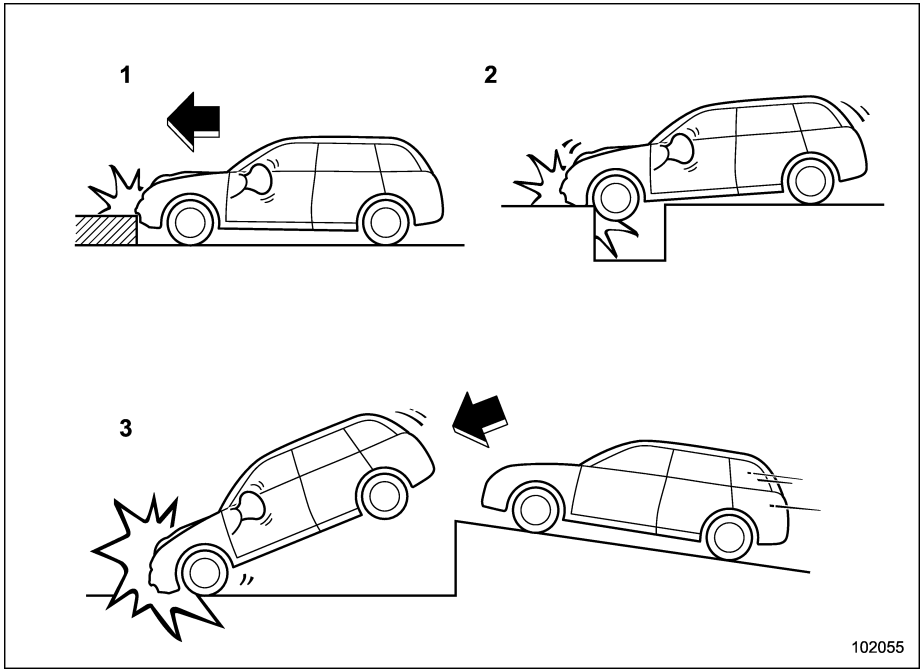

1) Hitting a curb, edge of pavement or hard surface
2) Falling into or jumping over a deep hole
3) Landing hard or vehicle falling

It is possible that the SRS curtain airbags will deploy if a serious impact occurs to the underside of your vehicle. Some examples are shown in the illustration.

– CONTINUED –

▽ **Examples of the types of accidents in which the SRS side airbag is unlikely to deploy**

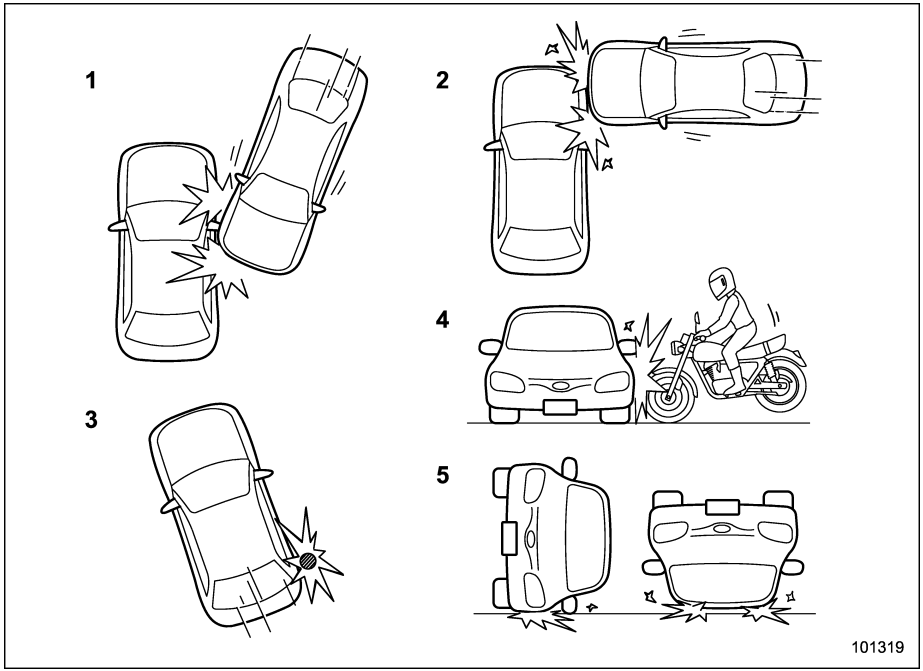

1) The vehicle is involved in an oblique side-on impact.
2) The vehicle is involved in a side-on impact in an area outside the vicinity of the passenger compartment.
3) The vehicle strikes a telephone pole or similar object.
4) The vehicle is involved in a side-on impact from a motorcycle.
5) The vehicle rolls onto its side or the roof.

There are many types of collisions which might not necessarily require SRS side airbag deployment. In the event of accidents like those illustrated, the SRS side airbag may not deploy depending on the level of accident forces involved.

▽ **Examples of the types of accidents in which the SRS curtain airbag is unlikely to deploy**

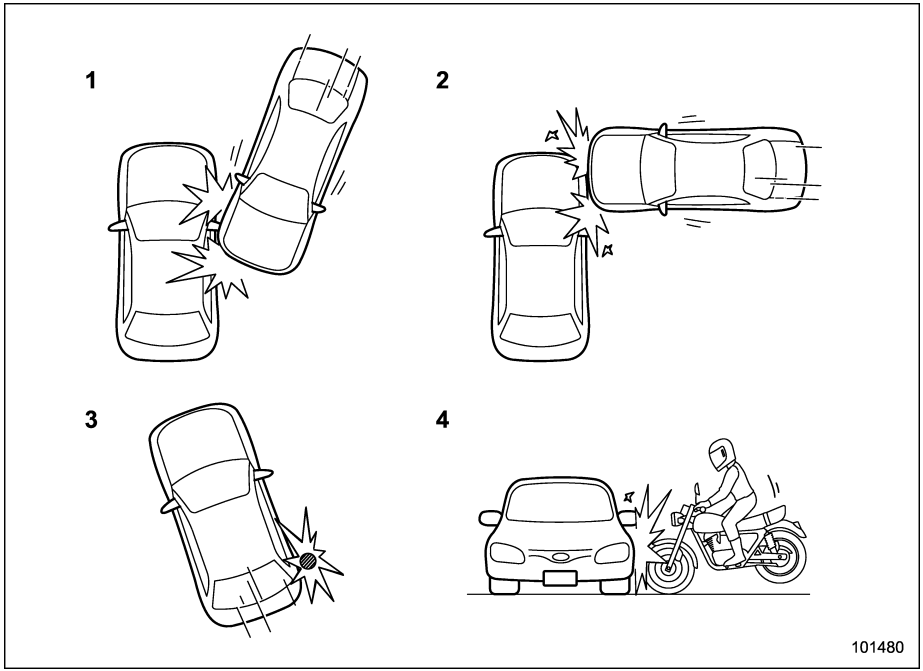

1) The vehicle is involved in an oblique side-on impact.
2) The vehicle is involved in a side-on impact in an area outside the vicinity of the passenger compartment.
3) The vehicle strikes a telephone pole or similar object.
4) The vehicle is involved in a side-on impact from a motorcycle.

There are many types of collisions which might not necessarily require SRS curtain airbag deployment. In the event of accidents like those illustrated, the SRS curtain airbag may not deploy depending on the level of accident forces involved.

– CONTINUED –

▽ **Examples of the types of accidents in which the SRS side airbag and SRS curtain airbag is not designed to deploy in most cases**

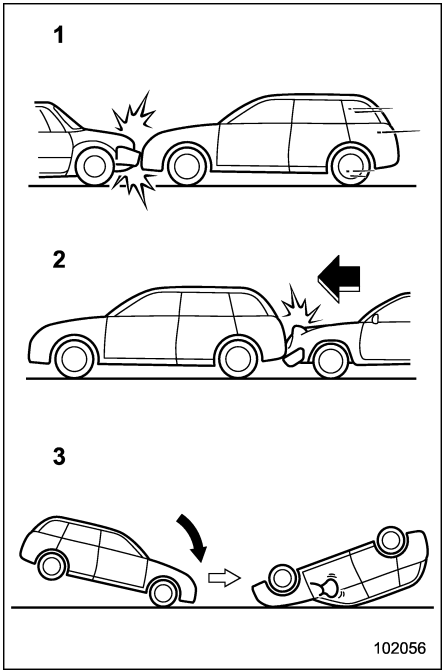

1) The vehicle is involved in frontal collision with another vehicle (moving or stationary). **(Only the SRS side airbag is designed not to deploy in most cases)**
2) The vehicle is struck from behind.
3) The vehicle pitches end over end.

In the event of accidents like those illustrated, the SRS side airbag and SRS curtain airbag are not designed to deploy in most cases.

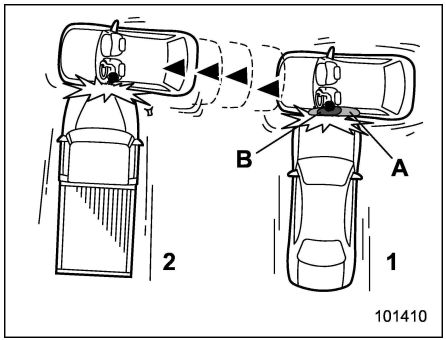

1) First impact
2) Second impact
A) SRS curtain airbag
B) SRS side airbag

In an accident where the vehicle is struck from the side more than once, the SRS side airbag and SRS curtain airbag deploy only once on the first impact.

Example: In the case of a double side impact collision, first with one vehicle and immediately followed by another from the same direction, once the SRS side airbag and SRS curtain airbag are activated on the first impact, they will not be activated on the second.

■ SRS airbag system monitors

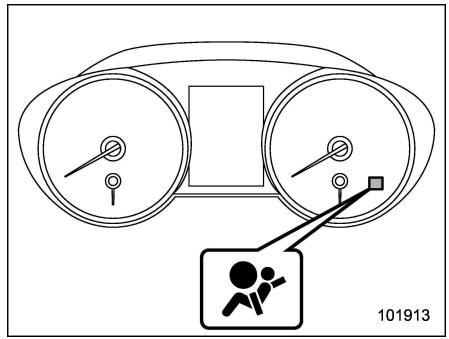

SRS airbag system warning light

A diagnostic system continually monitors the readiness of the SRS airbag system (including front seatbelt pretensioners) while the vehicle is being driven. The SRS airbag system warning light will show normal system operation by illuminating for approximately 6 seconds when the ignition switch is turned to the “ON” position.

The following components are monitored

by the indicator.

- Front sub sensor
  - Right-hand side
  - Left-hand side
- Airbag control module (including impact sensors and rollover sensors)
- Frontal airbag module
  - Driver's side
  - Front passenger's side
- Center pillar impact sensor
  - Right-hand side
  - Left-hand side
- Front door impact sensor
  - Right-hand side
  - Left-hand side
- Side airbag module
  - Driver's side
  - Front passenger's side
- Rear wheel house impact sensor
  - Right-hand side
  - Left-hand side
- Curtain airbag module
  - Right-hand side
  - Left-hand side
- Seat cushion airbag module
  - Driver's side
  - Front passenger's side
- Seatbelt pretensioner
  - Driver's side
  - Front passenger's side
- Seatbelt buckle switch
  - Driver's side
  - Front passenger's side
- Front passenger's occupant detection system sensor and control module
- Front passenger's seatbelt tension sensor
- Front passenger's frontal airbag ON and OFF indicator
- All related wiring

WARNING

If the warning light exhibits any of the following conditions, there may be a malfunction in the seatbelt pretensioners and/or SRS airbag system.

- **Flashing or flickering of the warning light**
- **No illumination of the warning light when the ignition switch is first turned to the "ON" position**
- **Continuous illumination of the warning light**
- **Illumination of the warning light while driving**

Immediately take your vehicle to your nearest SUBARU dealer to have the system checked. Unless checked and properly repaired, the seatbelt pretensioners and/or SRS airbags will operate improperly (e.g. SRS airbags may inflate in a very minor collision or not inflate in a severe collision), which may increase the risk of injury.

■ SRS airbag system servicing

WARNING

- **When discarding an airbag module or scrapping the entire vehicle damaged by a collision, consult your SUBARU dealer.**
- **The SRS airbag has no user-serviceable parts. Do not use electrical test equipment on any circuit related to the SRS airbag system. For required servicing of the SRS airbag, consult your nearest SUBARU dealer. Tampering with or disconnecting the system's wiring could result in accidental inflation of the SRS airbag or could make the system inoperative, which may result in serious injury.**

– CONTINUED –

CAUTION

If you need service or repair in areas indicated in the following list, have the work performed by an authorized SUBARU dealer. The SRS airbag control module, impact sensors and airbag modules are stored in these areas.

- Under the center console
- Inside each front fender
- Steering wheel and column and nearby areas
- Top of the dashboard on front passenger's side and nearby areas
- Each front seat and nearby area
- Inside each center pillar
- Inside each front door
- In each roof side (from the front pillar to a point over the rear seat)
- Between the rear seat cushion and rear wheel house on each side
- Under the rear center seat

In the event that the SRS airbag is deployed, replacement of the system should be performed only by an authorized SUBARU dealer. When the components of the SRS airbag system are replaced, use only genuine SUBARU parts.

NOTE

In the following cases, contact your SUBARU dealer as soon as possible.

- The front part of the vehicle was involved in an accident in which only the driver's SRS frontal airbag or both driver's and front passenger's SRS frontal airbags did not deploy.
- The pad of the steering wheel, the cover over the front passenger's SRS frontal airbag, or either roof side (from the front pillar to a point over the rear seat) is scratched, cracked, or otherwise damaged.
- The center pillar, front door, rear wheel house or rear sub frame, or an area near these parts, was involved in an accident in which the SRS side airbag and SRS curtain airbag did not deploy.
- The fabric or leather of either front seatback and seat cushion is cut, frayed, or otherwise damaged.
- The rear part of the vehicle was involved in an accident.

Precautions against vehicle modification

WARNING

- To avoid accidental activation of the system or rendering the system inoperative, which may result in serious injury, no modifications should be made to any components or wiring of the SRS airbag system.

  This includes the following modifications.

  – Installation of custom steering wheels
  – Attachment of additional trim materials to the dashboard
  – Installation of custom seats
  – Replacement of seat fabric or leather
  – Installation of additional fabric or leather on the front seat
  – Attachment of a hands-free microphone or any other accessory to a front pillar, a center pillar, a rear pillar, the windshield, a side window, an assist grip, or any other cabin surface that would be near a

deploying SRS curtain airbag

- **Installation of additional electrical/electronic equipment such as a mobile two-way radio on or near the SRS airbag system components and/or wiring**
- **Modifications on or inside the front door panels for the purpose of a speaker replacement or sound insulation**

- **The impact sensors, which detect the pressure of an impact, are located in the doors. Do not modify any components of the doors or door trims, such as the addition of door speakers for example. Any modifications to the doors create a risk of the airbag system becoming inoperative or unintended airbag deployment.**

CAUTION

Do not perform any of the following modifications. Such modifications can interfere with proper operation of the SRS airbag system.

- **Attachment of any equipment (bush bar, bullbar, winches, snow plow, skid/sump plate, etc.) other than genuine SUBARU accessory parts.**
- **Modification of the suspension system or front end structure.**
- **Installation of a tire of different size and construction from the tires specified on the vehicle placard attached to the driver's door pillar or specified for individual vehicle models in this Owner's Manual.**
- **Attachment of any equipment (side steps or side sill protectors, etc.) other than genuine SUBARU accessory parts to the side body.**

Always consult your SUBARU dealer if you want to install any accessory parts on your vehicle.

Keys 2-3
Key number plate 2-3
Immobilizer 2-4
Certification for immobilizer system 2-4
Security indicator light 2-5
Key replacement 2-5
Door locks 2-6
Locking and unlocking from the outside 2-6
Locking and unlocking from the inside 2-7
Automatic door locking/unlocking 2-8
Battery drainage prevention function 2-8
Power door locking switches 2-9
Key lock-in prevention function 2-9
Keyless access with push-button start system (if equipped) 2-10
Access key fob 2-10
Safety precautions 2-11
Locking and unlocking with “keyless access” entry function 2-14
Selecting audible signal operation 2-19
Selecting hazard warning flasher operation 2-19
Warning chimes and warning indicator 2-19
Disabling keyless access function 2-19
When access key fob does not operate properly 2-21
Replacing battery of access key fob 2-21
Replacing access key fob 2-21
Certification for keyless access with push-button start system 2-21
PIN Code Access (models with “keyless access with push-button start system”) 2-22
Registering a PIN code 2-23
Unlocking 2-24
Remote keyless entry system 2-25
Operating the access key fob 2-25
Operating the transmitter 2-27
Replacing the battery 2-28
Replacing lost transmitters 2-28
Certification for remote keyless entry system 2-28
Alarm system 2-29
System alarm operation 2-29
Activating and deactivating the alarm system 2-30
If you have accidentally triggered the alarm system 2-30
Arming the system 2-30
Disarming the system 2-33
Valet mode 2-33
Tripped sensor identification 2-34
Shock sensors (dealer option) 2-34
Child safety locks 2-34
Windows 2-35
Power window operation 2-35
Initialization of power window (windows with one-touch auto up/down function) 2-37
Trunk lid (Legacy) 2-38
To open and close the trunk lid from outside 2-38
To open the trunk lid from inside 2-39
Internal trunk lid release handle 2-39

Rear gate (Outback) **2-41**
Manual rear gate **2-41**
Power rear gate (if equipped) **2-42**

Moonroof (if equipped) **2-48**
Moonroof switches **2-49**
Sun shade **2-50**

Keys

NOTE

For models with “keyless access with push-button start system”, refer to “Keyless access with push-button start system” ☞2-10.

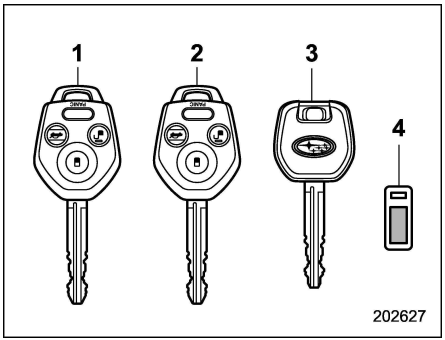

1) Master key
2) Submaster key
3) Valet key
4) Key number plate

Three types of keys are provided for your vehicle:
Master key, submaster key and valet key.

The master key and submaster key fit all locks on your vehicle.

- Ignition switch
- Driver’s door
- Glove box
- Trunk lid (Legacy)

The valet key fits only the ignition switch and door locks. You can keep the glove box locked when you leave your vehicle and valet key at a parking facility.

⚠ CAUTION

Do not attach a large key holder or key case to either key. If it bangs against your knees while you are driving, it could turn the ignition switch from the “ON” position to the “ACC” or “LOCK” position, thereby stopping the engine.

■ Key number plate

The key number is stamped on the key number plate attached to the key set. Write down the key number and keep it in another safe place, not in the vehicle. This number is needed to make a replacement key if you lose your key or lock it inside the vehicle.

Immobilizer

The immobilizer system is designed to prevent an unauthorized person from starting the engine. Only keys registered with your vehicle's immobilizer system can be used to operate your vehicle. This system, however, is not a 100% anti-theft guaranty.

For models with "keyless access with push-button start system":

If you press the push-button ignition switch when carrying an unregistered access key fob, the switch will not turn to the "ON" position and the engine will not start.

If the engine does not start, perform the procedure described in "Starting engine" ☞9-20.

For models without "keyless access with push-button start system":

Even if an unregistered key fits into the ignition switch and can be turned to the "START" position, the engine will automatically stop after several seconds.

If the engine does not start, pull out the key once before trying again. Refer to "Ignition switch (models without push-button start system)" ☞3-3.

⚠ CAUTION

- **Do not place the key under direct sunlight or anywhere it may become hot.**
- **Do not get the key wet. If the key gets wet, wipe it dry with a cloth immediately.**
- **Do not modify or remove the system. If modified or removed, the proper operation of the system cannot be guaranteed.**

NOTE

- **To protect your vehicle from theft, please pay close attention to the following security precautions:**
  - **– Never leave your vehicle unattended with its keys inside.**
  - **– Before leaving your vehicle, close all windows and the moonroof, and lock the doors (all models) and rear gate (Outback).**
  - **– Do not leave spare keys or any record of your key number in the vehicle.**
- **The vehicle has a maintenance-free type immobilizer system.**

■ Certification for immobilizer system

- **For models with "keyless access with push-button start system":**

Refer to "Certification for keyless access with push-button start system" ☞2-21.

- **For models without "keyless access with push-button start system":**
  - **– U.S.-spec. models**

FCC ID: MOZRI-38BFH

⚠ CAUTION

FCC WARNING
Changes or modifications not expressly approved by the party responsible for compliance could void the user's authority to operate the equipment.

This device complies with part 15 of the FCC Rules. Operation is subject to the following two conditions: (1) This device may not cause harmful interference, and (2) this device must accept any interference received, including interference that may cause undesired operation.

– **Canada-spec. models**

NOTE

This device complies with Industry Canada's licence-exempt RSSs. Operation is subject to the following two conditions: (1) This device may not cause interference; and (2) This device must accept any interference, including interference that may cause undesired operation of the device.

REMARQUE

Le présent appareil est conforme aux CNR d'Industrie Canada applicables aux appareils radio exempts de licence. L'exploitation est autorisée aux deux conditions suivantes: (1) l'appareil ne doit pas produire de brouillage; (2) l'utilisateur de l'appareil doit accepter tout brouillage radioélectrique subi, même si le brouillage est susceptible d'en compromettre le fonctionnement.

203226

– **Mexico-spec. models**

Este equipo opera a título secundario, consecuentemente, debe aceptar interferencias perjudiciales incluyendo equipos de la misma clase y puede no causar interferencias a sistemas operando a título primario.

500612

■ Security indicator light

Refer to "Security indicator light" ☞3-29.

■ Key replacement

Your key number plate will be required if you ever need a replacement key made. Any new key must be registered for use with your vehicle's immobilizer system before it can be used. The maximum number of keys that can be registered for use with one vehicle is as follows.

- Four (models without "keyless access with push-button start system")
- Seven (models with "keyless access with push-button start system")

One key that has already been registered is required in order to register a new key.

If you lose a key, the lost key's ID code still remains in the memory of the vehicle's immobilizer system. For security reasons, the lost key's ID code should be erased from the memory. To erase the lost key's ID code, all keys that will be used are required.

For details about new key registration and erasing the lost key's ID code, contact your SUBARU dealer.

Door locks

■ Locking and unlocking from the outside

NOTE

If you unlock the driver's door with a key (including an emergency key) and open the door while the alarm system is armed, the alarm system is triggered and the vehicle's horn sounds. In this case, perform any of the following operations:

Models with "keyless access with push-button start system":

- **Press any button on the access key fob (except when the access key fob battery is discharged).**
- **Turn the push-button ignition switch to the "ACC" position.**
- **Carry the access key fob and perform either of the following procedures.**
  - **Grip the front door handle**
  - **Press the rear gate opener button**

Models without "keyless access with push-button start system":

- **Press any button on the remote transmitter (except when the transmitter battery is discharged).**
- **Insert the key into the ignition switch and turn the ignition switch to the "ON" position.**

For details about the alarm system, refer to "Alarm system" ☞2-29.

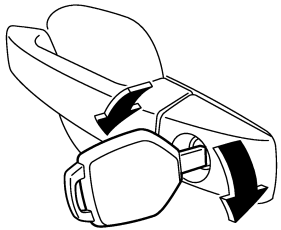

201877

To lock the driver's door from the outside with the key, turn the key toward the front.

To unlock the door, turn the key toward the rear. Pull the outside door handle to open an unlocked door.

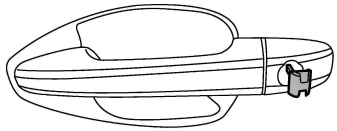

202628

NOTE

The emergency key is directional. If the key cannot be inserted, change the direction that the grooved side is facing and insert it again.

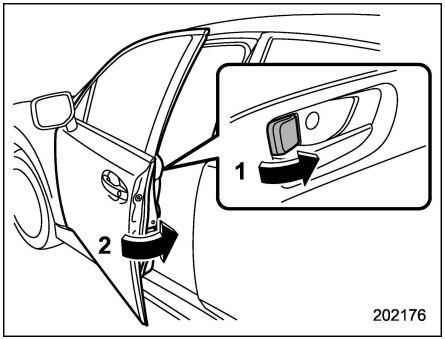

Locking without the key

1) Rotate the lock lever forward.
2) Close the door.

To lock the door from the outside without the key, rotate the lock lever forward and then close the door.

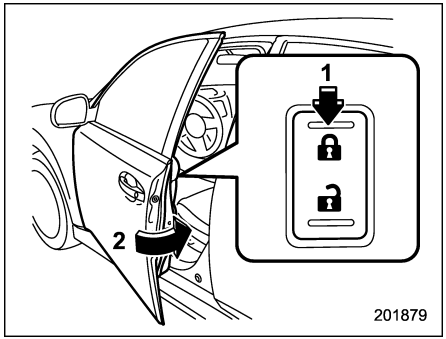

Locking without the key

1) Press the front side of the power door locking switch.
2) Close the door.

To lock the door from the outside using the power door locking switch, press the front side of the switch (“LOCK” side) and then close the door. In this case, all closed doors and the rear gate (Outback) are locked at the same time.

Always make sure that all doors and the rear gate are locked before leaving your vehicle.

NOTE

Make sure that you do not leave the key inside the vehicle before locking the doors from the outside without the key.

■ Locking and unlocking from the inside

⚠ WARNING

- **Keep all doors locked when you drive, especially when small children are in your vehicle.**

  Along with the proper use of seatbelts and child restraints, locking the doors reduces the chance of being thrown out of the vehicle in an accident.

  It also helps prevent passengers from falling out by preventing a door from being accidentally opened, and intruders from unexpectedly opening doors and entering your vehicle.
- **Do not pull the front door handle from inside while driving. The door could open even if it is locked.**

– CONTINUED –

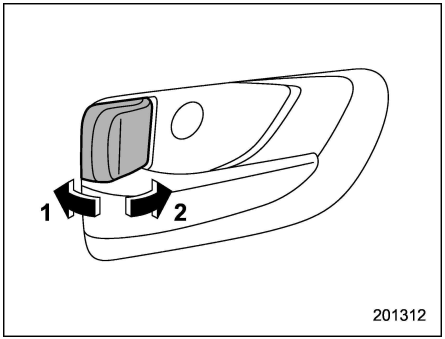

1) Unlock
2) Lock

To lock the door from the inside, rotate the lock lever forward. To unlock the door from the inside, rotate the lock lever rearward.

The red mark on the lock lever appears when the door is unlocked.

Pull the inside door handle to open an unlocked door.

Always make sure that all doors and the rear gate (Outback) are closed before starting to drive.

■ Automatic door locking/unlocking

All doors are automatically locked when the vehicle speed reaches more than 12 mph (20 km/h).

When the driver's door is opened, all doors, including the trunk or rear gate, are automatically unlocked.

NOTE

- **Perform the settings of the automatic door locking and unlocking on the combination meter. Refer to "Auto Door Lock and Unlock" ☞3-44. Also, the settings can be performed by using the navigation system. Refer to the separate navigation/audio Owner's Manual.**
- **If the system detects a strong enough impact to deploy the airbags, all doors may be automatically unlocked. For further details, refer to "Auto lock/unlock operation when involved in an accident" ☞9-24.**

■ Battery drainage prevention function

If a door or the rear gate (Outback) is not completely closed, the interior lights will remain illuminated as a result. However, several lights are automatically turned off by the battery drainage prevention function to prevent the battery from going dead. The following interior lights are affected by this function.

Item	Switch position	Automatically turning off
Map lights	DOOR	Approximately 20 minutes later
Dome light	DOOR	Approximately 20 minutes later
Ignition switch light	—	Approximately 20 minutes later
Cargo area light	DOOR	Approximately 20 minutes later

The operational/non-operational setting of this function can be changed by a SUBARU dealer. Contact the nearest SUBARU dealer if you would like to change the setting.

NOTE

- **The factory setting (default setting) for this function is set as "operational".**
- **When leaving the vehicle, please make sure that all doors and the rear gate (Outback) are completely closed.**
- **The battery drainage prevention function does not operate under the following condition.**
  - **While the push-button ignition switch is in "ACC" or "ON" (models**

with the push-button ignition switch)

– While the key is in the ignition switch (models without the push-button ignition switch)

- **Models with the push-button ignition switch are also equipped with the battery drainage prevention function for the push-button ignition switch. For details, refer to "Battery drainage prevention function" ☞3-7.**

Power door locking switches

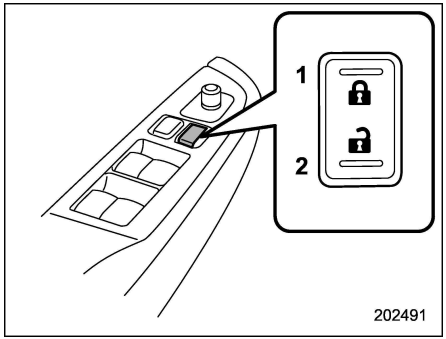

1) Lock
2) Unlock

All doors and the rear gate (Outback) can be locked and unlocked by the power door locking switches located at the driver's side and the front passenger's side doors.

To lock the doors, press the front side of the switch.
To unlock the doors, press the rear side of the switch.

When you close the doors after you set the door locks, the doors remain locked.

NOTE

Make sure that you do not leave the key inside the vehicle before locking the doors from the outside using the power door locking switches.

■ Key lock-in prevention function

This function prevents the doors from being locked under the following conditions.

- The key is still in the ignition switch (models without "keyless access with push-button start system")
- The ignition switch is in the "ON" position (models with "keyless access with push-button start system")

This function's operational/non-operational setting can be changed by a SUBARU dealer. Contact a SUBARU dealer for details.

NOTE

- **The factory setting (default setting) for this function is set as "operational".**
- **When leaving the vehicle, make sure you are holding the key before locking the doors.**

– CONTINUED –

▼ **Behavior with key lock-in prevention function operational**

With the driver's door open, the doors are automatically kept unlocked even if the front side of the power door locking switch is pressed.

▼ **Behavior with key lock-in prevention function non-operational**

- If the lock lever is turned to the rear ("LOCK") position with the driver's door open and the driver's door is then closed with the lock lever in that position, the driver's door is locked.
- If the spare key is used to lock the driver's door from the outside of the vehicle, the door is locked.

Keyless access with push-button start system (if equipped)

The keyless access with push-button start system allows you to perform the following functions when you are carrying the access key fob.

- Locking and unlocking of the doors and rear gate (Outback)
- Opening the trunk (Legacy)
- Starting and stopping the engine. For detailed information, refer to "Starting and stopping engine (models with push-button start system)" ☞7-11.
- Arming and disarming the alarm system. For detailed information, refer to "Alarm system" ☞2-29.

Locking and unlocking by the remote keyless entry system can also be controlled with the buttons on the access key fob. For detailed information, refer to "Remote keyless entry system" ☞2-25.

■ Access key fob

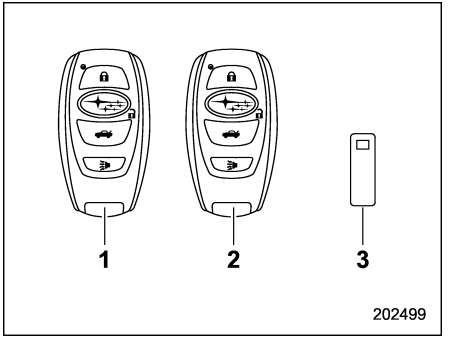

1) Access key fob (main)
2) Access key fob (sub)
3) Key number plate

The vehicle has two access key fobs and a key number plate. For details about the key number plate, refer to "Key number plate" ☞2-3.

An emergency key is attached to each access key fob. The emergency key is used for the following operations.

- Locking and unlocking the driver's door
- Locking and unlocking the glove box
- Unlocking the trunk lid (Legacy)

You cannot unlock the glove box without using the emergency key. You can keep the glove box locked when you leave your

vehicle and the access key fob (with the emergency key removed) at a parking facility.

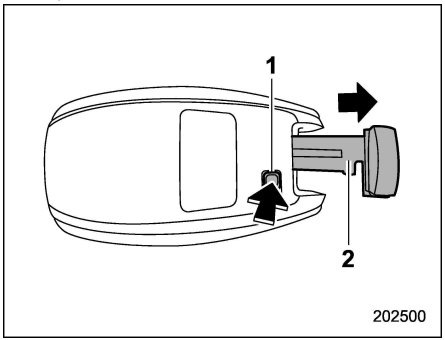

1) Release button
2) Emergency key

While pressing the release button of the access key fob, take out the emergency key.

■ Safety precautions

▼ Regarding radio wave

⚠ WARNING

If you wear an implanted pacemaker or an implanted defibrillator, stay at least 8.7 in (22 cm) away from the transmitting antennas installed on the vehicle.

The radio waves from the transmitting antennas on the vehicle could adversely affect the operation of implanted pacemakers and implanted defibrillators.

If you wear electric medical equipment other than an implanted pacemaker or an implanted defibrillator, before using the keyless access with push-button start system, refer to "Radio waves used for the keyless access with push-button start system" ☞2-13, and contact the electric medical equipment manufacturer for more information. The radio waves from the transmitting antennas on the vehicle could adversely affect the operation of the electric medical equipment.

⚠ CAUTION

When traveling an airplane, do not press the button of the access key fob. If any button of the access key fob is pressed, radio waves are emitted and may affect the operation of the airplane. When carrying the access key fob in a bag, take measures to prevent the buttons from being pressed accidentally.

NOTE

The status of the access key fob and environmental conditions may interfere with the communication between the access key fob and the vehicle under the following conditions.

- **When operating near a source of strong radio waves or other interference, such as a broadcast station or power transmission lines**
- **When products that transmit radio waves are used, such as an access key fob or a remote transmitter key of another vehicle**
- **When carrying the access key fob of your vehicle together with an access key fob or a remote transmitter of another vehicle**
- **When the access key fob is placed**

– CONTINUED –

near wireless communication equipment such as a cell phone, or near a metallic object
- When metallic accessories are attached to the access key fob
- When carrying the access key fob with electronic appliances such as a laptop computer
- When the battery of the access key fob is discharged

In such cases, it may not be possible to lock or unlock the doors or start the engine.

▼ Regarding malfunction

CAUTION

- Never leave or store the access key fob inside the vehicle or within 6.6 ft (2 m) around the vehicle (e.g., in the garage). The access key fob may be locked inside the vehicle, or the battery may discharge rapidly. Note that the push-button ignition switch may not turn on in some cases depending on the location of the access key fob.
- The access key fob contains electronic components. Observe the following precautions to prevent malfunctions or battery discharge.
  - It is recommended to have the access key battery replaced at an authorized SUBARU dealer to avoid the risk of damage.
  - Do not get the access key fob wet. If the access key fob gets wet, wipe it off immediately and let it dry completely.
  - Do not apply strong impacts to the access key fob.
  - Keep the access key fob away from magnetic sources.
  - Do not leave the access key fob near a personal computer or home electrical appliance.
  - Do not leave the access key fob near a battery charger or any electrical accessories.
  - Do not apply metallic window tint or attach metallic objects to the windows.
  - Do not fit non genuine accessories and parts.
  - Never leave the access key fob in direct sunlight or anywhere that may become hot, such as on the dashboard. It may damage the battery or cause circuit malfunctions.
  - Do not wash the access key fob in an ultrasonic washer.
  - Do not leave the access key fob in humid or dusty locations, or near personal computers or home electric appliances.

NOTE

After the vehicle battery is discharged or replaced, initialization of the steering lock system may be required to start the engine. In this case, perform the following procedure to initialize the steering lock.

1) Turn the push-button ignition switch to the “OFF” position. For details, refer to “Switching power status” ☞3-6.
2) Open and close the driver’s door.
3) Wait for approximately 10 seconds.

When the steering is locked, the initialization is completed.

▼ **Regarding access key fob**

⚠ CAUTION

If the access key fob is dropped, the integrated emergency key inside may become loose. Be careful not to lose the emergency key.

NOTE

- **The access key fob is always communicating with the vehicle and is continuously using the battery. Although the life of the battery varies depending on the operating conditions, it is approximately 1 to 2 years. If the battery becomes fully discharged, replace it with a new one.**
- **If an access key fob is lost, it is recommended that the access key fob be reregistered. For reregistration of an access key fob, contact a SUBARU dealer.**
- **Up to 7 access key fobs can be registered for one vehicle. For a spare access key fob, contact a SUBARU dealer.**
- **Carefully store the key number plate supplied with the access key fob. It is necessary for vehicle repair and additional registration of access key fobs.**
- **Do not leave the access key fob in the storage spaces inside the vehicle. Vibrations may damage the key or turn on the switch, possibly resulting in a lockout.**

▼ **Regarding setting**

NOTE

- **The operational/non-operational setting for the keyless access function can be changed. For the setting procedure, refer to "Disabling keyless access function" ☞2-19. The setting can also be changed by a SUBARU dealer. For more details, contact a SUBARU dealer.**
- **For detailed information about the operation method for the push-button ignition switch while the keyless access function is switched to the non-operational mode, refer to "Access key fob – if access key fob does not operate properly" ☞9-19.**

▼ **Radio waves used for the keyless access with push-button start system**

The keyless access with push-button start system uses radio waves of 134 kHz, in addition to the radio waves used for the remote keyless entry system. The radio waves are periodically output from the antennas installed on the vehicle as shown in the following illustrations.

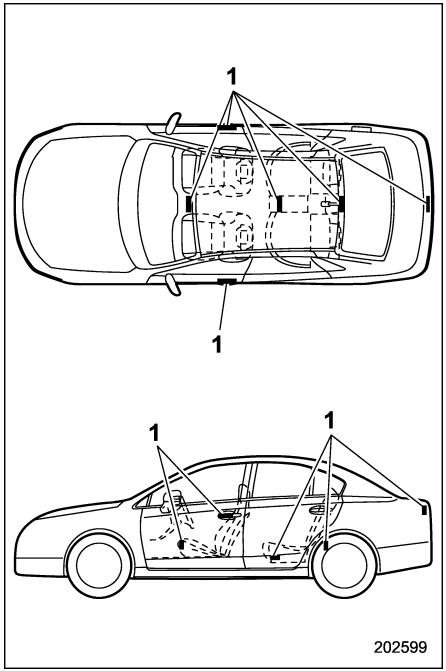

Legacy
1) Antenna

– CONTINUED –

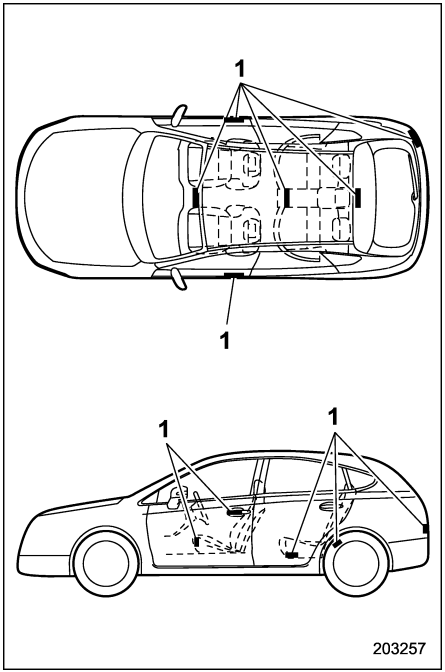

Outback
1) Antenna

■ Locking and unlocking with “keyless access” entry function

▼ Operating ranges

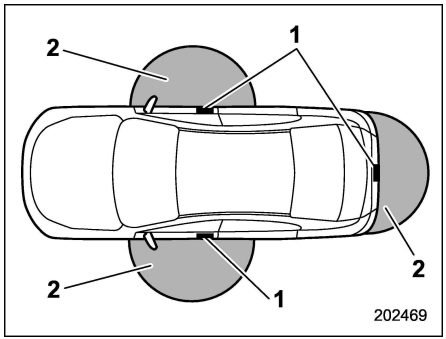

Legacy
1) Antenna
2) Operating range

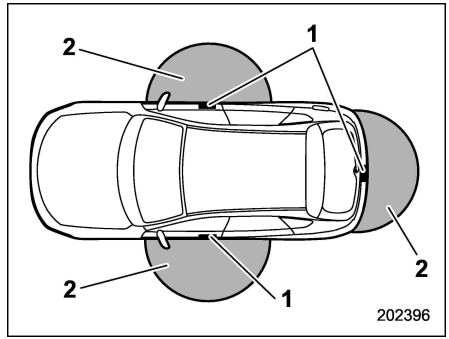

Outback
1) Antenna
2) Operating range

- The operating range of the door locking/unlocking function is approximately 16 to 32 in (40 to 80 cm) from the respective door handle.
- **For Legacy,** the operating range of the trunk opening function is approximately 16 to 32 in (40 to 80 cm) from the trunk opener button.
- **For Outback,** the operating range of the rear gate locking/unlocking function is approximately 16 to 32 in (40 to 80 cm) from the rear gate ornament.

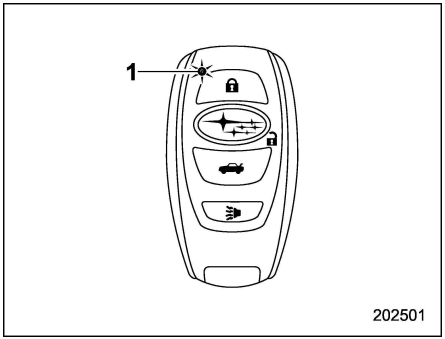

1) LED indicator

When the access key fob is within either of the operating ranges of the front doors, the LED indicator on the access key fob flashes. When the keyless access functions are disabled, the LED indicator does not flash unless a button on the access key fob is pressed.

▽ **Operating range tips**

Regarding malfunction:

The keyless access function may not operate properly due to the following reasons.

- The access key fob is placed too close to the vehicle body (in this case, repeat the operation from further away).
- The access key fob is placed near the ground or in an elevated location from the ground, even if it is in the indicated operating range.
- The status of the access key fob and the radio wave conditions around the vehicle (in this case, perform the procedure described in “Locking and unlocking” ☞9-19.

Precautions:

- When the access key fob is within the operating range, it is possible for anyone, even someone who is not carrying the access key fob, to operate the keyless access function. Please note that the keyless access function is only available for the following items when the access key fob is detected within operating range.
  - Door handle
  - Door lock sensor
  - Rear gate opener button (Outback)
  - Trunk opener button (Legacy)
  - Rear lock button (Outback)
- It is not possible to lock the doors and rear gate using the keyless access function when the access key fob is inside the vehicle. However, depending on the status of the access key fob and the environmental conditions, the access key fob may be locked inside the vehicle. Before locking, make sure that you have the access key fob.
- The operating ranges may be reduced, or the keyless access function may not operate in the following cases:
  - When the battery of the access key fob is discharged
  - When the access key fob is in a location with strong radio waves or noise (e.g., near a radio tower, power plant, broadcast station or an area where wireless equipment is used)
  - While talking on a cell phone

  In such a case, perform the procedure described in “Locking and unlocking” ☞9-19.
- When an access key fob is in the operating range, if the door handle becomes wet due to exposure to a significant amount of water when the vehicle is washed or during heavy rain, the doors may be locked or unlocked.

▼ **How to use keyless access functions**

▽ **Keyless access function tips**

- Turn off the push-button ignition switch before locking the doors (including rear gate) using the keyless access function. It is not possible to lock the doors (including the rear gate) using the keyless access function when the push-button ignition switch is on the “ACC” or “ON” position.

– CONTINUED –

For details about turning off the push-button ignition switch, refer to “Switching power status” ☞3-6.

- If the door handle is gripped with a gloved hand, the door lock may not be released.
- If the door lock sensor is touched three times or more repeatedly, the system will ignore the sensor operation.
- When performing the locking procedure too quickly, locking may not have been completed. After locking the doors, it is recommended to pull the REAR door handles to confirm that the doors have been locked.
- It is possible to lock the doors even when one of the doors is open. After performing the locking procedure, close the opened door or rear gate to lock it.
- Within 3 seconds after locking the doors and the rear gate by using the keyless access function, it is not possible to unlock doors and/or the rear gate by using the keyless access function.
- When locking, be sure to carry the access key fob to prevent locking the access key fob in the vehicle.

▽ Unlocking

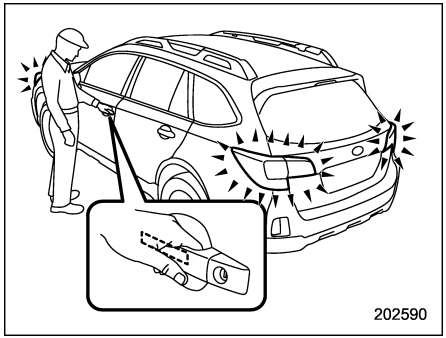

Carry the access key fob, and grip the door handle.

- When the driver’s door handle is gripped, only the driver’s door will be unlocked.
- When the front passenger’s door handle is gripped, all doors (for Outback, including the rear gate) will be unlocked.

Also, an electronic chirp will sound twice and the hazard warning flashers will flash twice.

▽ Opening rear gate (Outback)

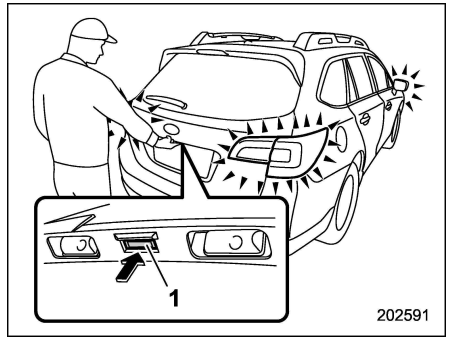

1) Rear gate opener button

Carry the access key fob, and press the rear gate opener button. Only the rear gate will be unlocked and opened. Also, an electronic chirp will sound twice and the hazard warning flashers will flash twice.

▽ **Opening trunk (Legacy)**

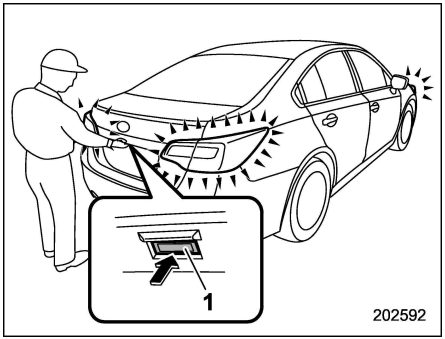

1) Trunk opener button

Carry the access key fob, and press the trunk opener button. The trunk will open.

An electronic chirp will sound twice and the hazard warning flashers will flash twice.

NOTE

Under the following conditions, the trunk can be opened without the key fob.

- **The trunk lock/unlock setting is set to on.**
- **All doors are unlocked.**

The trunk lock/unlock setting can be changed by a SUBARU dealer. Contact your SUBARU dealer to change the setting.

▽ **Locking with the door lock sensor**

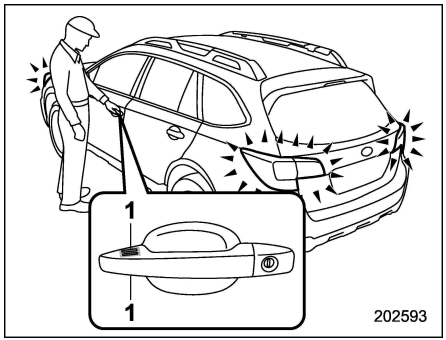

1) Door lock sensor

Carry the access key fob, close all doors (for Outback, including the rear gate) and touch the door lock sensor on the door handle. All doors including the rear gate will be locked. Also, an electronic chirp will sound once and the hazard warning flashers will flash once.

NOTE

After touching the door lock sensor to lock all of the doors (including the rear gate), if you touch the door lock sensor once more to attempt the lock operation without first unlocking the doors, nothing will happen, even if the door lock sensor is touched. In this case, perform the unlocking operation once first. You can then touch the door lock sensor to lock the doors.

▽ **Locking with the rear lock button (Outback)**

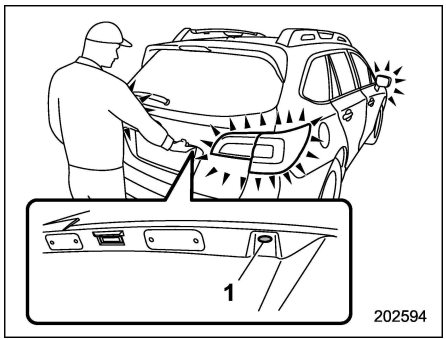

1) Rear lock button

Carry the access key fob, close all doors including the rear gate and press the rear lock button. The rear gate and all doors will be locked. Also, an electronic chirp will sound once and the hazard warning flashers will flash once.

– CONTINUED –

▼ Power saving function

To protect the access key battery and the vehicle battery, the keyless access function will be disabled as follows.

- When the keyless access function and the remote keyless entry system have not been used:
  (1) 5 days after the push-button ignition switch has been turned off, communication between the antennas and the access key fob will be stopped.
  (2) 9 days after step (1), the sensors (both lock sensor and unlock sensor) on the front passenger's door will be disabled.
- When the access key fob has been left in the operating range for 10 minutes or longer while all doors are locked, the keyless access function will be disabled.

▽ Recovery from power saving mode

When one of the following operations is performed, the keyless access function will be recovered.

- Unlock by gripping the door handle (only when the sensors on the front passenger's door are not disabled) or pressing the rear gate opener button on the rear gate (Outback)/trunk opener button on the trunk lid (Legacy)
- Lock or unlock by the remote keyless entry system
- Open a door and then close it
- Turn the push-button ignition switch to the "ON" position

▼ Power saving function of access key fob

This function stops the access key fob from receiving signals and helps minimize the battery consumption of the access key fob.

1. Press the "🔓" button twice while holding the "🔒" button.

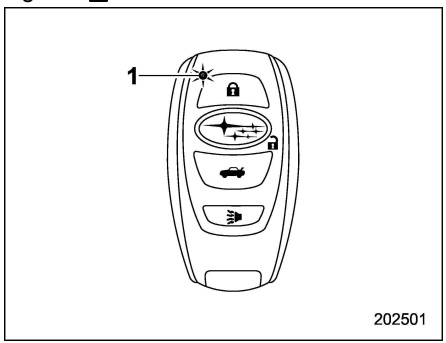

1) LED indicator

2. Confirm that the LED indicator blinks 4 times to notify that the setting is complete.

When the access key fob is in the power save mode, the keyless access function and push-button start system will not be available.

To cancel the power save mode, press one of the buttons on the access key fob.

▼ Door unlock selection function

The door unlock selection function makes the following operations possible.

- Unlocking the driver's door without unlocking any other doors (including the rear gate) when gripping the driver's door handle
- For Outback, opening the rear gate without unlocking any doors when pressing the rear gate opener button

The operational/non-operational setting for this function can be changed by operating the multi information display. For details, refer to "Keyless Entry System" ☞3-44. The setting can also be changed by a SUBARU dealer. Consult your SUBARU dealer for details.

Operational:

- Only the driver's door will be unlocked when the driver's door handle is gripped.
- For Outback, the rear gate will open, but the other doors will remain locked when the rear gate opener button is pressed.

Non-operational:

- All doors and the rear gate will be unlocked when the driver's door handle is gripped.
- For Outback, the rear gate will open and all doors will be unlocked when the rear gate opener button is pressed.

The factory setting (default setting) is set as "operational".

■ Selecting audible signal operation

Using an electronic chirp, the system will give you an audible signal when the doors are locked or unlocked. If desired, you can turn the audible signal off by operating the multi information display. For details, refer to "Keyless Entry System" ☞3-44.

Furthermore, the volume setting of the audible signal can also be changed by a SUBARU dealer. Consult your SUBARU dealer for details.

■ Selecting hazard warning flasher operation

Using the hazard warning flasher, the system will give you a visible signal when the doors are locked or unlocked. If desired, you can turn the hazard warning flashers off by operating the multi information display. For details, refer to "Keyless Entry System" ☞3-44. The setting can also be changed by a SUBARU dealer. Consult your SUBARU dealer for details.

■ Warning chimes and warning indicator

The keyless access with push-button start system is equipped with a warning chime and the access key warning indicator in order to minimize improper operations and help protect your vehicle from theft.

For details, refer to "Warning chimes and warning indicator of the keyless access with push-button start system" ☞3-24.

■ Disabling keyless access function

When the vehicle is not going to be used for a long time, or when you choose not to use the keyless access function, the keyless access function can be disabled.

⚠ WARNING

If you have an implanted pacemaker or an implanted defibrillator, perform the procedure "By operating the driver's door" ☞2-20 to disable the keyless access function. If you perform the procedure "By operating the access key fob" ☞2-20, the operation of an implanted pacemaker or implanted defibrillator may be affected by the radio waves from the transmitter antenna.

NOTE

- **The locking and unlocking function by the remote keyless entry system is not disabled.**
- **The setting can also be changed at SUBARU dealers. For more details, contact a SUBARU dealer.**
- **To start the engine while the functions are disabled, perform the procedure described in "Starting engine" ☞9-20.**
- **We recommend that you disable the keyless access functions under the following conditions.**
  - **When the vehicle is not going to be used for an extended period of time**

– CONTINUED –

– When the keyless access functions are not going to be used

▼ Disabling functions

▽ By operating the access key fob

If you have registered a PIN code for PIN Code Access, you can disable the keyless access function by operating the access key fob. For details about registering a PIN code, refer to “Registering a PIN code” ☞2-23.

1. Open the driver’s door.

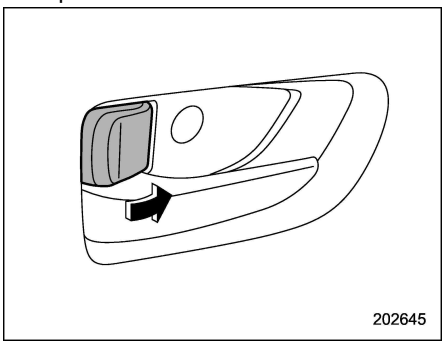

2. Rotate the lock lever forward.

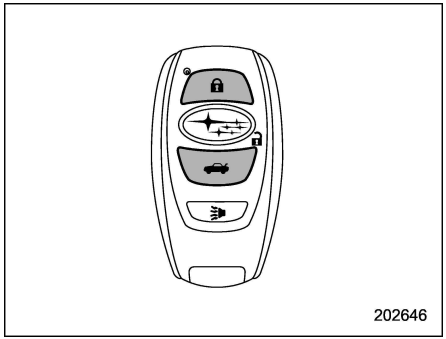

3. Press and hold the “🔒” button and “🚗” button on the access key fob simultaneously for more than 5 seconds.

A chirp sound will be heard, and the function will be disabled.

▽ By operating the driver’s door

1. Sit in the driver’s seat, and close the door.

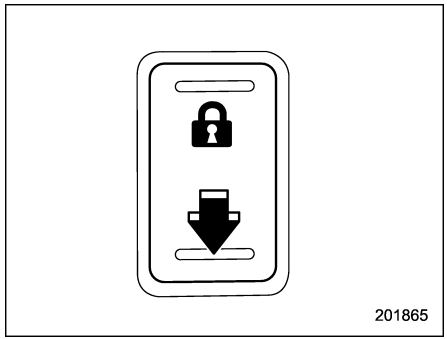

2. Push the rear side (unlock side) of the power door locking switch.
3. Within 5 seconds after step 2 is performed, open the driver’s door.
4. Within 5 seconds after step 3 is performed, push the rear side (unlock side) of the power door locking switch twice while the door is open.
5. Within 10 seconds after step 4 is performed, close and open the driver’s door twice.
6. Within 10 seconds after step 5 is performed, push the rear side (unlock side) of the power door locking switch twice while the door is open.

7. Within 10 seconds after step 6 is performed, close and open the driver's door once.
8. Within 5 seconds after step 7 is performed, close the door.

A chirp sound will be heard, and the functions will be disabled.

NOTE

In steps 4 and 6, press the power door locking switch firmly. If the switch is not pressed firmly, the functions may not be disabled.

▼ Enabling functions

When the procedure to disable the functions is performed again, a chirp sound will be heard, and the functions are enabled.

NOTE

- **The keyless access function will be enabled only if you perform the procedure in the same manner you disabled the function (for example, when disabling by operating the driver's door, the function will not be enabled even if you operate the access key fob).**
- **Press the push-button ignition switch if you do not know the procedure in which the keyless access function was disabled.**
  - **When disabling by operating the driver's door: a chirp will not be heard**
  - **When disabling by operating the access key fob: a chirp will be heard**

■ When access key fob does not operate properly

Refer to "Access key fob – if access key fob does not operate properly" ☞9-19.

■ Replacing battery of access key fob

Refer to "Replacing battery of access key fob" ☞11-48.

■ Replacing access key fob

Access key fobs can be replaced at SUBARU dealers. For more details, contact a SUBARU dealer.

■ Certification for keyless access with push-button start system

- **U.S.-spec. models**

FCC ID: HYQ14AHK
FCC ID: Y8PFJ17–1
FCC ID: Y8PSSPIMB02

⚠ CAUTION

FCC WARNING

Changes or modifications not expressly approved by the party responsible for compliance could void the user's authority to operate the equipment.

This device complies with part 15 of the FCC Rules. Operation is subject to the following two conditions: (1) This device may not cause harmful interference, and (2) this device must accept any interference received, including interference that may cause undesired operation.

– CONTINUED –

- **Canada-spec. models**

NOTE

This device complies with Industry Canada’s licence-exempt RSSs. Operation is subject to the following two conditions: (1) This device may not cause interference; and (2) This device must accept any interference, including interference that may cause undesired operation of the device.

REMARQUE

Le présent appareil est conforme aux CNR d’Industrie Canada applicables aux appareils radio exempts de licence. L’exploitation est autorisée aux deux conditions suivantes: (1) l’appareil ne doit pas produire de brouillage; (2) l’utilisateur de l’appareil doit accepter tout brouillage radioélectrique subi, même si le brouillage est susceptible d’en compromettre le fonctionnement.

203226

- **Mexico-spec. models**

Este equipo opera a título secundario, consecuentemente, debe aceptar interferencias perjudiciales incluyendo equipos de la misma clase y puede no causar interferencias a sistemas operando a título primario.

500612

IFT
RLVDE1415-1661
14AHK
DENSO

PIN Code Access (models with “keyless access with push-button start system”)

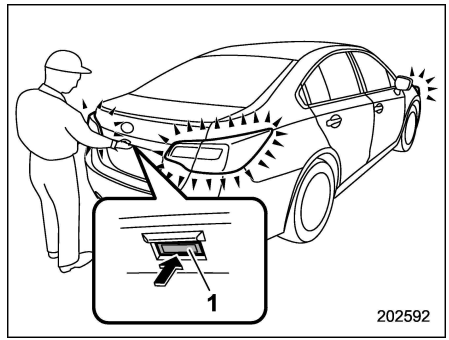

1) Trunk opener button (Legacy)

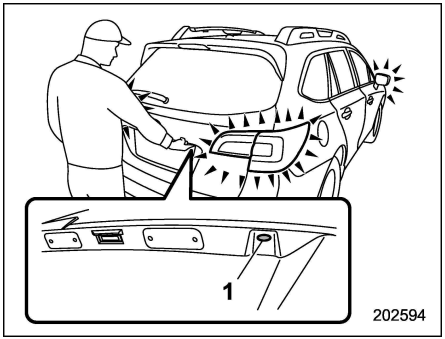

1) Rear lock button (Outback)

While all doors (for Outback, including the rear gate) are locked, you can unlock the doors (including rear gate) without a key by performing the following procedure.

- Legacy: press the trunk opener button
- Outback: press the rear lock button

NOTE

PIN Code Access will be helpful if the key is accidentally left in the vehicle. It is recommended that a 5-digit security code (PIN code) is registered.

■ Registering a PIN code

▼ Preparation

1. Turn off the ignition switch.
2. Close all doors (including trunk/rear gate).
3. Press and hold the “🔒” button on the access key fob. Then all doors (including rear gate) will be locked.
4. Keep the “🔒” button pressed, and press the following button within 5 seconds after step 3.
   - Legacy: the trunk opener button
   - Outback: the rear lock button
5. Press and hold the above button for more than 5 seconds. Then a chirp will sound.
6. Press the “🔓” button on the access key fob while the chirp sounds.

Then the chirp will stop and the preparation is complete.

NOTE

If you do not press the “🔓” button on the access key fob, the chirp will sound for 30 seconds. In this case, the preparation for registering a PIN code does not complete even if the chirp stops.

▼ Registration

For example, to register “32468” as the PIN code, perform the following procedure.

Legacy:

1. Press the trunk opener button three times.
2. After a buzzer (ding) sounds once, press the trunk opener button twice.
3. After a buzzer (ding) sounds once, press the trunk opener button four times.
4. After a buzzer (ding) sounds once, press the trunk opener button six times.
5. After a buzzer (ding) sounds once, press the trunk opener button eight times.
6. Perform steps 1 to 5 again within approximately 30 seconds after the buzzer starts sounding intermittently.
7. All doors will be unlocked and locked. Then the PIN code will be registered.

Outback:

1. Press the rear lock button three times.
2. After a buzzer (ding) sounds once, press the rear lock button twice.
3. After a buzzer (ding) sounds once, press the rear lock button four times.
4. After a buzzer (ding) sounds once, press the rear lock button six times.
5. After a buzzer (ding) sounds once,

– CONTINUED –

press the rear lock button eight times.

6. Perform steps 1 to 5 again within approximately 30 seconds after the buzzer starts sounding intermittently.

7. All doors (including rear gate) will be unlocked and locked. Then the PIN code will be registered.

NOTE

- **Press the trunk opener button/rear lock button ten times to enter “0”.**
- **Change the PIN code frequently to protect your vehicle from theft.**
- **If you have lent your vehicle to another person, confirm that the PIN code has not been changed or deleted. If the PIN code has been changed or deleted, reregister a new PIN code.**
- **If you make an error during the registration procedure, press the “🔒” or “🚗” button on the access key fob. Then, start over from the procedure described in “Preparation”.**
- **To protect your vehicle from theft, you cannot register “00000” to “99999” or “12345” as a PIN code.**
- **Do not register your vehicle license plate number or simple numbers such as “11122” or “12121” as a PIN code. Doing so will increase the risk of vehicle theft.**
- **When you try to register “22222”, the registered PIN code will be deleted. You cannot unlock the doors by PIN Code Access until a new code is registered.**
- **After registering a new PIN code, make sure that you can unlock the doors using the PIN code.**
- **The PIN code cannot be deleted while the keyless access function is disabled by operating the access key fob.**
- **Reregister the PIN code in the following case.**
  - **when you forget the PIN code**
  - **when you want to change the PIN code**

■ Unlocking

Perform steps 1 to 5 described in “Registration”.

NOTE

- **You cannot unlock by PIN Code Access in the following cases.**
  - **when the access key fob is within the operating ranges**
  - **when the ignition switch is in the “ACC” or “ON” position**
- **If you make an operation error during the unlocking procedure, start over with the unlocking procedure after waiting for 5 seconds or longer.**
- **To protect your vehicle from theft, a buzzer will sound if incorrect PIN codes are entered five times continuously. If this occurs, you cannot unlock the doors by PIN Code Access for 5 minutes.**

Remote keyless entry system

⚠ CAUTION

- **Do not expose the remote transmitter to severe shocks, such as those experienced as a result of dropping or throwing.**
- **Do not take the remote transmitter apart except when replacing the battery.**
- **Do not get the remote transmitter wet. If it gets wet, wipe it dry with a cloth immediately.**
- **When you carry the remote transmitter on an airplane, do not press the button of the remote transmitter while in the airplane. When any button of the remote transmitter is pressed, radio waves are sent and may affect the operation of the airplane. When you carry the remote transmitter in a bag on an airplane, take measures to prevent the buttons of the remote transmitter from being pressed.**

For models with “keyless access with push-button start system”, the access key is used as the transmitter for the remote keyless entry system. For models without “keyless access with push-button start system”, the transmitter for the remote keyless entry system is located inside the key head.

The remote keyless entry system has the following functions.

- Locking and unlocking the doors (and rear gate for Outback) without a key
- Opening the trunk lid (Legacy) without key
- Sounding a panic alarm
- Arming and disarming the alarm system. For detailed information, refer to “Alarm system” ☞2-29.

The operable distance of the remote keyless entry system is approximately 30 feet (10 meters). However, this distance will vary depending on environmental conditions. The system’s operable distance will be shorter in areas near a facility or electronic equipment emitting strong radio waves such as a power plant, broadcast station, TV tower, or remote controller of home electronic appliances.

■ Operating the access key fob

NOTE

The remote keyless entry system will not be activated when the push-button ignition switch is in any position other than the “OFF” position.

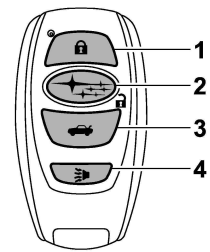

202502

Access key fob
1) Lock/arm button
2) Unlock/disarm button
3) Trunk lid opener/rear gate unlock button
4) PANIC button

▼ Locking the doors

Press the lock/arm button to lock all doors and rear gate (Outback). When the doors (including the rear gate) are locked, an electronic chirp will sound once and the hazard warning flashers will flash once.

– CONTINUED –

If any of the doors (or the rear gate/trunk lid) is not fully closed, the following will occur to alert you that the doors (or the rear gate/trunk lid) are not properly closed.

- an electronic chirp sounds five times.
- the hazard warning flashers flash five times.

When you close the door, it will automatically lock and then the following will occur.

- an electronic chirp sounds once.
- the hazard warning flashers flash once.

▼ Unlocking the doors

Press the unlock/disarm button to unlock the driver's door. An electronic chirp will sound twice and the hazard warning flashers will flash twice. To unlock all doors and the rear gate (Outback), briefly press the unlock/disarm button a second time within 5 seconds.

NOTE

If the interval between the first and second presses of the unlock/disarm button (for unlocking of all of the doors and the rear gate) is extremely short, the system may not respond.

▼ Opening the trunk lid (Legacy)

Press and hold the trunk lid opener button to open the trunk lid. An electronic chirp will sound twice and the hazard warning flashers will flash twice.

▼ Unlocking the rear gate (Outback)

Press the rear gate unlock button to unlock the rear gate. An electronic chirp will sound twice and the hazard warning flashers will flash twice.

▼ Selecting audible signal operation

Using an electronic chirp, the system will give you an audible signal when the doors are locked or unlocked. If desired, you can turn the audible signal off by operating the multi information display. For details, refer to "Keyless Entry System" ☞3-44.

Furthermore, the volume setting of the audible signal can also be changed by a SUBARU dealer. Consult your SUBARU dealer for details.

▼ Selecting hazard warning flasher operation

Using the hazard warning flasher, the system will give you a visible signal when the doors are locked or unlocked. If desired, you can turn the hazard warning flashers off by operating the multi information display. For details, refer to "Keyless Entry System" ☞3-44. The setting can also be changed by a SUBARU dealer. Consult your SUBARU dealer for details.

▼ Vehicle finder function

Use this function to find your vehicle parked among many vehicles in a large parking lot. Provided you are within 30 feet (10 meters) of the vehicle, pressing the lock/arm button three times in a 5-second period will cause your vehicle's horn to sound once and its hazard warning flashers to flash three times.

NOTE

If the interval between presses is too short when you press the lock/arm button three times, the system may not respond to the signals from the remote transmitter.

▼ Sounding a panic alarm

To activate the alarm, press the "PANIC" button once.

The horn will sound and the hazard warning flashers will flash.

To deactivate the panic alarm, press any button on the remote transmitter. If a button on the remote transmitter is not pressed, the alarm will be deactivated after approximately 30 seconds.

■ Operating the transmitter

NOTE

The remote keyless entry system will not be activated when the key is inserted in the ignition switch.

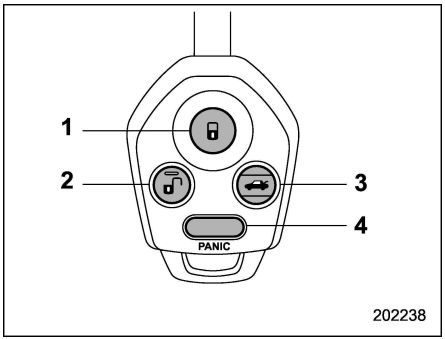

Transmitter
1) Lock/arm button
2) Unlock/disarm button
3) Trunk lid opener/rear gate unlock button
4) PANIC button

▼ Locking the doors

Press the lock/arm button to lock all doors and rear gate (Outback). When the doors (including the rear gate) are locked, an electronic chirp will sound once and the hazard warning flashers will flash once.

If any of the doors (or the rear gate/trunk lid) is not fully closed, the following will occur to alert you that the doors (or the rear gate/trunk lid) are not properly closed.

- an electronic chirp sounds five times.
- the hazard warning flashers flash five times.

When you close the door, it will automatically lock and then the following will occur.

- an electronic chirp sounds once.
- the hazard warning flashers flash once.

▼ Unlocking the doors

Press the unlock/disarm button to unlock the driver's door. An electronic chirp will sound twice and the hazard warning flashers will flash twice. To unlock all doors and the rear gate (Outback), briefly press the unlock/disarm button a second time within 5 seconds.

NOTE

If the interval between the first and second presses of the unlock/disarm button (for unlocking of all of the doors and the rear gate) is extremely short, the system may not respond.

▼ Opening the trunk lid (Legacy)

Press and hold the trunk lid opener button to open the trunk lid. An electronic chirp will sound twice and the hazard warning flashers will flash twice.

▼ Unlocking the rear gate (Outback)

Press the rear gate unlock button to unlock the rear gate. An electronic chirp will sound twice and the hazard warning flashers will flash twice.

▼ Selecting audible signal operation

Using an electronic chirp, the system will give you an audible signal when the doors are locked or unlocked.

If desired, the audible signal ON/OFF setting and the audible signal volume can be customized by a SUBARU dealer. Consult your SUBARU dealer for details.

▼ Selecting hazard warning flasher operation

Using the hazard warning flasher, the system will give you a visible signal when the doors are locked or unlocked. If desired, you can turn the hazard warning flashers off by operating the multi information display. For details, refer to "Keyless Entry System" ☞3-44. The setting can also be changed by a SUBARU dealer. Consult your SUBARU dealer for details.

– CONTINUED –

▼ **Vehicle finder function**

Use this function to find your vehicle parked among many vehicles in a large parking lot. Provided you are within 30 feet (10 meters) of the vehicle, pressing the lock/arm button three times in a 5-second period will cause your vehicle's horn to sound once and its hazard warning flashers to flash three times.

NOTE

If the interval between presses is too short when you press the lock/arm button three times, the system may not respond to the signals from the remote transmitter.

▼ **Sounding a panic alarm**

To activate the alarm, press the "PANIC" button once.

The horn will sound and the hazard warning flashers will flash.

To deactivate the panic alarm, press any button on the remote transmitter. If a button on the remote transmitter is not pressed, the alarm will be deactivated after approximately 30 seconds.

■ Replacing the battery

Refer to "Replacing battery" ☞11-47.

■ Replacing lost transmitters

If you lose a transmitter or want to purchase additional transmitters (up to four can be programmed), you should reprogram all of your transmitters for security reasons. For details, contact your SUBARU dealer and have the transmitters programmed into the remote keyless entry system.

■ Certification for remote keyless entry system

- **U.S.-spec. models**

FCC ID: CWTB1G077

FCC ID: CWTD1G049

⚠ CAUTION

FCC CAUTION

Changes or modifications not expressly approved by the party responsible for compliance could void the user's authority to operate the equipment.

This device complies with part 15 of the FCC Rules. Operation is subject to the following two conditions: (1) This device may not cause harmful interference, and (2) this device must accept any interference received, including interference that may cause undesired operation.

- **Canada-spec. models**

NOTE

This device complies with Industry Canada's licence-exempt RSSs. Operation is subject to the following two conditions: (1) This device may not cause interference; and (2) This device must accept any interference, including interference that may cause undesired operation of the device.

REMARQUE

Le présent appareil est conforme aux CNR d'Industrie Canada applicables aux appareils radio exempts de licence. L'exploitation est autorisée aux deux conditions suivantes: (1) l'appareil ne doit pas produire de brouillage; (2) l'utilisateur de l'appareil doit accepter tout brouillage radioélectrique subi, même si le brouillage est susceptible d'en compromettre le fonctionnement.

203226

- **Mexico-spec. models**

La operación de este equipo está sujeta a las siguientes dos condiciones:
(1) es posible que este equipo o dispositivo no cause interferencia perjudicial y
(2) este equipo o dispositivo debe aceptar cualquier interferencia, incluyendo la que pueda causar su operación no deseada.

202642

IFETEL RLVSUTB15-1814
SUBARU
MODEL: TB1G077

IFETEL RLVSUTD15-1815
SUBARU
MODEL: TD1G049

Alarm system

The alarm system helps to protect your vehicle and valuables from theft. The horn sounds and the hazard warning flashers flash if someone attempts to break into your vehicle.

For models with “keyless access with push-button start system”:
The system can be armed or disarmed with the keyless access function or access key fob.
The system will not be activated when the push-button ignition switch is in the “ACC” or “ON” position.

For models without “keyless access with push-button start system”:
The system can be armed and disarmed with the remote transmitter.
The system will not be activated when the key is inserted into the ignition switch.

Your vehicle’s alarm system has been set for activation at the time of shipment from the factory. You can set the system for deactivation yourself or have it done by your SUBARU dealer.

■ System alarm operation

The alarm system will give the following alarms when triggered.
- The vehicle’s horn will sound for 30 seconds.
- The hazard warning flashers will flash for 30 seconds.

If any of the doors (or the rear gate/trunk lid) remains open after the 30-second period, the horn will continue to sound for a maximum of 3 minutes. If the door (or the rear gate/trunk lid) is closed while the horn is sounding, the horn will stop sounding with a delay of up to 30 seconds.

The alarm is triggered by:
- Opening any of the doors, rear gate or the trunk lid
- Physical impact to the vehicle, such as forced entry (only models with shock sensors (dealer option))

NOTE

The alarm system can be set to trigger the illumination of the following interior lights.
- **Map lights**
- **Dome light (illuminates only when the dome light switch is in the “DOOR” position)**
- **Cargo area light (Outback)**

– CONTINUED –

The notifications regarding the map lights, dome light and cargo area light (Outback) are deactivated as the factory setting. A SUBARU dealer can activate the system. Contact your SUBARU dealer for details.

■ Activating and deactivating the alarm system

To change the setting of your vehicle's alarm system for activation or deactivation, do the following.

1. Disarm the alarm system. Refer to "Disarming the system" ☞2-33.
2. Sit in the driver's seat and shut all doors (and the rear gate (Outback)).
3. Turn the ignition switch to the "ON" position.
4. Hold down the REAR (UNLOCK) side of the driver's power door locking switch, open the driver's door within the following 1 second, and wait 10 seconds without releasing the switch. The setting will then be changed as follows:

If the system was previously activated:
The odometer screen displays "ALOF" and the horn sounds twice, indicating that the system is now deactivated.

If the system was previously deactivated:
The odometer screen displays "ALON" and the horn sounds once, indicating that the system is now activated.

NOTE

You may have the above setting change done by your SUBARU dealer.

■ If you have accidentally triggered the alarm system

▼ To stop the alarm

Perform any of the following operations.

- Press any button on the access key fob/remote transmitter.
- Turn the ignition switch to the "ON" position (models without "keyless access with push-button start system").
- Turn the push-button ignition switch to the "ACC" position (models with "keyless access with push-button start system").

NOTE

Only registered keys will stop the alarm. If the key is not registered, the alarm will not stop.

■ Arming the system

NOTE

- **The system can be armed even if the engine hood, the windows and/or moonroof are open. Always make sure that they are fully closed before arming the system.**
- **When arming the system, if any of the doors or the rear gate/trunk lid is not fully closed, an electronic chirp sounds five times, the hazard warning flashers flash five times to alert you that the doors (or the rear gate/trunk lid) are not properly closed. When you close the door, doors will automatically lock and the system will automatically arm in 30 seconds.**
- **The 30-second standby time can be eliminated if you prefer. Have it performed by your SUBARU dealer.**
- **For Legacy, if you open the trunk using the access key fob/remote transmitter's "🚗" button in the surveillance state (or the standby state), the system will be temporarily placed in a standby state. The system will go back to the surveillance state in 30 seconds upon locking the trunk.**
- **The system is in the standby state for a 30-second period before arming the system. The security indicator light will flash at short intervals during this**

period.

● If any of the following actions is done during the standby period, the system will not switch to the surveillance state.

– Doors (including the rear gate/trunk lid) are unlocked using the access key fob/remote transmitter.

– Doors (including the rear gate/trunk lid) are unlocked using the keyless access function (models with "keyless access with push-button start system").

– Any door (including the rear gate/trunk lid) is opened.

– The ignition switch is turned to the "ON" position (models without "keyless access with push-button start system").

– Push-button ignition switch is turned to the "ACC" position (models with "keyless access with push-button start system").

▼ To arm the system using the access key fob/remote transmitter

1. Close all windows and the moonroof (if equipped).
2. Remove the key from the ignition switch (models without "keyless access with push-button start system")/turn the push-button ignition switch to the "OFF" position (models with "keyless access with push-button start system").
3. Open the doors and get out of the vehicle.
4. Make sure that the engine hood is locked.
5. Close all doors and the rear gate/trunk lid.

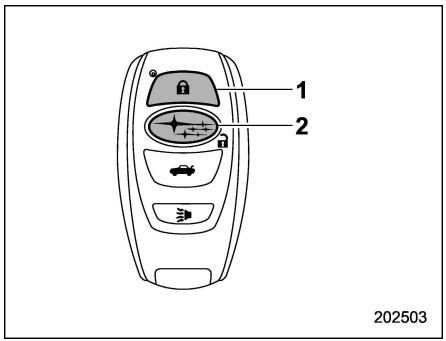

Access key fob

1) Arm button: Press to arm the system
2) Disarm button: Press to disarm the system

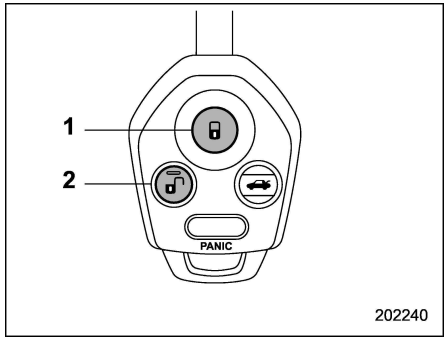

Transmitter

1) Arm button: Press to arm the system
2) Disarm button: Press to disarm the system

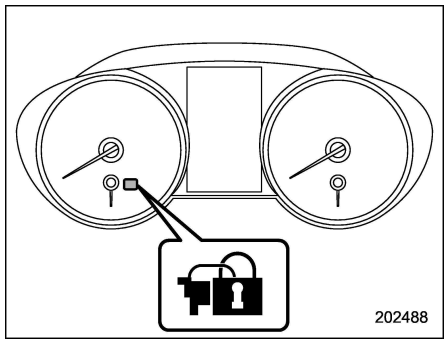

Security indicator light

6. Briefly press the arm button (for less

– CONTINUED –

than 2 seconds). All doors (and the rear gate (Outback)) will lock, an electronic chirp will sound once, the hazard warning flashers will flash once, and the security indicator light will start flashing rapidly. After rapid flashing for 30 seconds (stand-by time), the security indicator light will then flash slowly (twice approximately every 2 seconds), indicating that the system has been armed for surveillance.

If any of the doors (rear gate or trunk lid) is not fully closed, an electronic chirp sounds five times, the hazard warning flashers flash five times to alert you that the doors (or the rear gate/trunk lid) are not properly closed. When you close the door, the system will automatically arm and doors will automatically lock.

▼ To arm the system using power door locking switch

1. Close all windows and the moonroof (if equipped).
2. Remove the key from the ignition switch (models without keyless access function)/make sure the push-button ignition switch is turned off (models with keyless access function).
3. Open the doors and get out of the vehicle.
4. Make sure that the engine hood (and the trunk lid (Legacy)) are locked.
5. Close the doors (and the rear gate (Outback)) but leave only the driver's door or the front passenger's door open.

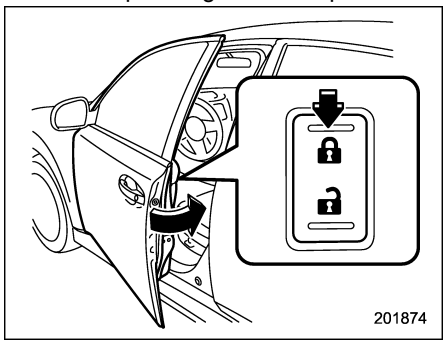

6. Press the front side ("LOCK" side) of the power door locking switch to set the door locks.
7. Close the door. An electronic chirp will sound once, the hazard warning flashers will flash once and the security indicator light will start flashing rapidly. After rapid flashing for 30 seconds (standby time), the security indicator light will then flash slowly (twice approximately every 2 seconds), indicating that the system has been armed for surveillance.

▼ To arm the system using the keyless access function (if equipped)

1. Close all windows and the moonroof (if equipped)
2. Turn the push-button ignition switch to the "OFF" position.
3. Open the doors and get out of the vehicle.
4. Make sure that the engine hood is locked.
5. Close all doors and the rear gate/trunk lid.

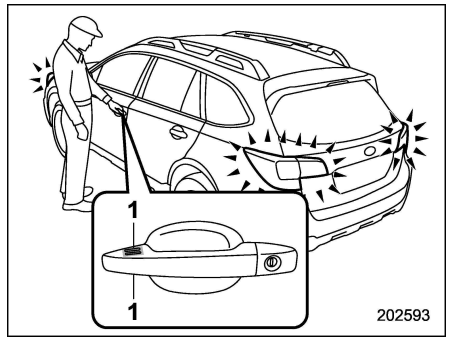

1) Door lock sensor

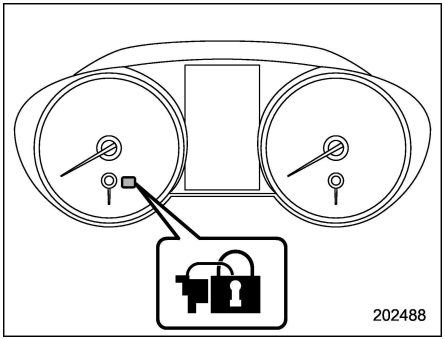

Security indicator light

6. Carry the access key fob and touch the door lock sensor. All doors (for Outback, including the rear gate) will lock, an electronic chirp will sound once, the hazard warning flashers will flash once, and the security indicator light will start flashing rapidly. After rapid flashing for 30 seconds (standby time), the security indicator light will then flash slowly (twice approximately every 2 seconds), indicating that the system has been armed for surveillance.

If any of the doors or the rear gate is not fully closed, an electronic chirp sounds five times, the hazard warning flashers flash five times to alert you that the doors (or the rear gate/trunk lid) are not properly closed. When you close the door, the system will automatically arm and doors will automatically lock.

■ Disarming the system

Perform either of the following procedures.

- Briefly press the disarm button (for less than 2 seconds) on the access key fob/remote transmitter.
- Carry the access key fob and perform either of the following procedures (models with “keyless access with push-button start system”).
  - Grip the front door handle.
  - Press the rear gate opener button.

The flashing of the security indicator light will then change slowly (once approximately every 3 seconds from twice approximately every 2 seconds), indicating that the alarm system has been disarmed.

▼ Emergency disarming

If you cannot disarm the system using the transmitter (i.e. the transmitter is lost, broken or the transmitter battery is too weak), you can disarm the system without using the transmitter.

The system can be disarmed if you turn the ignition switch from the “LOCK”/“OFF” to the “ON” position with a registered key/access key fob.

NOTE

For models with “keyless access with push-button start system”, if the access key battery is discharged, perform the procedure described in “Switching power status” ☞9-19. In such a case, replace the battery immediately. Refer to “Replacing battery of access key fob” ☞11-48.

■ Valet mode

When you choose the valet mode, the alarm system does not operate. In valet mode, the access key fob/remote transmitter is used only for locking and unlocking the doors and rear gate (Outback) and panic activation.

To enter the valet mode, change the setting of your vehicle’s alarm system for deactivation mode. Refer to “Activating and deactivating the alarm system” ☞2-30. The security indicator light will continue to flash once every 3 seconds indicating that the system is in the valet mode.

To exit valet mode, change the setting of your vehicle’s alarm system for activation mode. Refer to “Activating and deactivating the alarm system” ☞2-30.

– CONTINUED –

■ Tripped sensor identification

The security indicator light flashes when the alarm system has been triggered. Also, the number of flashes indicates the location of unauthorized intrusion or the severity of impact on the vehicle.

When the ignition switch is turned to the "ON" position, the indicator light will illuminate for 1 second and then flash as follows:

- When a door or rear gate (Outback) was opened: 5 times
- When the trunk (Legacy) was opened: 4 times
- When a strong impact or multiple impacts were sensed: twice (only models with shock sensors (dealer option))
- When a light impact was sensed: once (only models with shock sensors (dealer option))

■ Shock sensors (dealer option)

The shock sensors trigger the alarm system when they sense impacts applied to the vehicle and when any of their electric wires is cut. The alarm system causes the horn to sound and the hazard warning flashers to flash for a short time when the sensed impact is weak, but it warns of a strong impact or multiple impacts by sounding the horn and flashing the hazard warning flashers, both lasting approximately 30 seconds.

If you desire, your SUBARU dealer can connect them and set them for activation or deactivation.

NOTE

- **The shock sensors are not always able to sense impacts caused by breaking in, and cannot sense an impact that does not cause vibration (such as breaking the glass using a rescue hammer).**
- **The shock sensors may sense vibration like those shown in the following examples and trigger the alarm system. Select the settings of the alarm system and shock sensors appropriately depending on where you usually park your vehicle.**

Examples:

- **Vibration from construction site**
- **Vibration in multistory car park**
- **Vibration from trains**

- **You can have the sensitivity of the shock sensors adjusted to your preference by your SUBARU dealer.**

Child safety locks

⚠ WARNING

Always turn the child safety locks to the "LOCK" position when children sit on the rear seat. Serious injury could result if a child accidentally opens the door and falls out.

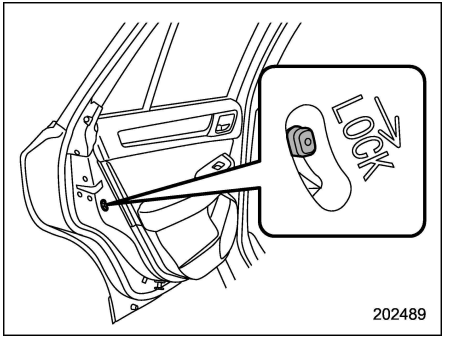

Each rear door has a child safety lock. When the child safety lock lever is in the "LOCK" position, the door cannot be opened from inside. The door can only be opened from the outside.

Windows

⚠ WARNING

To avoid serious personal injury caused by entrapment, always conform to the following instructions without exception.

- **When operating the power windows, be extremely careful to prevent anyone's fingers, arms, neck, head or other objects from being caught in the window.**
- **Always lock the passengers' windows using the lock switch when children are riding in the vehicle.**
- **For safety reasons, always carry the key with you when leaving the vehicle and never allow an unattended child to remain in the vehicle. Failure to follow this procedure could result in injury to a child operating the power window.**

The power windows operate only when the ignition switch is in the "ON" position.

■ Power window operation

▼ Power window switches

Driver's side power window switches:

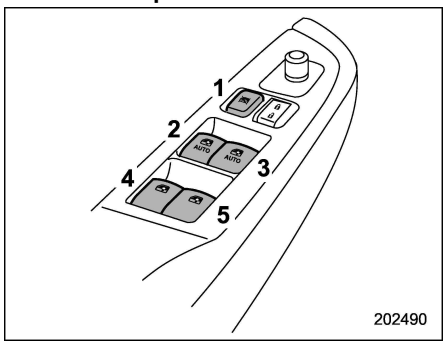

1) Lock switch
2) For driver's window
3) For front passenger's window
4) For rear left passenger's window
5) For rear right passenger's window

All door windows can be controlled by the power window switch cluster at the driver side door.

Passenger's side power window switches:

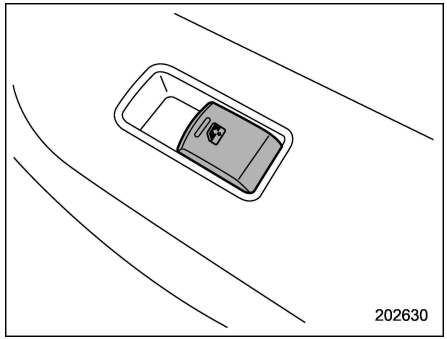

Each passenger's window can be controlled by the power window switch located on the door.

– CONTINUED –

▼ Operating the window

With one-touch auto up and down feature:

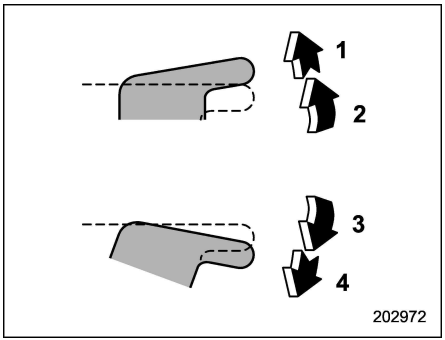

1) Automatically close*
2) Close
3) Open
4) Automatically open*

*: To stop the window halfway, operate the switch to opposite side.

NOTE

- **If you continue to hold the AUTO switch in the down position after the window has been fully opened, the circuit breaker may activate for a short time and the window may not operate. Allow several seconds for the system to reset without touching the switch, and the window will begin to operate normally on its own.**
- **If you continue to hold the AUTO switch in the up position after the window has fully closed, the circuit breaker may open and the system may not operate. After several seconds, the window will be able to be opened by holding the switch down until it is fully opened. The AUTO function will not operate. The window can be raised by pulling up on the switch several times until the window is fully closed.**

To reset to normal operation, initialize the power window to reactivate the one-touch auto up/down function. Refer to "Initialization of power window (windows with one-touch auto up/down function)" ☞2-37.

- **If the vehicle's battery is disconnected due to situations such as battery or fuse replacement, the one-touch auto up/down function will be deactivated. Initialize the power window to reactivate the one-touch auto up/down function. Refer to "Initialization of power window (windows with one-touch auto up/down function)" ☞2-37.**

Without one-touch auto up and down feature:

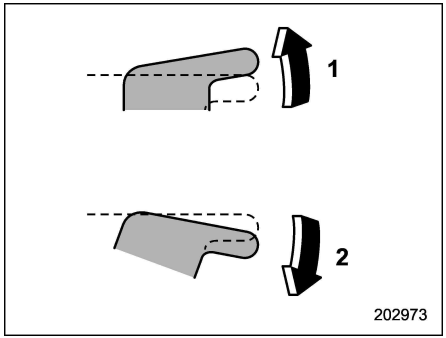

1) Close
2) Open

To open:
Press the appropriate switch down and hold it until the window reaches the desired position.

To close:
Pull the switch up and hold it until the window reaches the desired position.

▽ **Anti-entrapment function (windows with one-touch auto up/down function)**

⚠ CAUTION

- **Never attempt to test this function using fingers, hands or other parts of your body.**
- **The anti-entrapment function may not operate properly if some object gets trapped just before the window fully closes.**

NOTE

- **If a window detects an impact similar to that caused by trapping an object (for example, when the vehicle encounters a deep pothole), the anti-entrapment function may operate.**
- **The window cannot be operated for a few seconds after the anti-entrapment function operates.**
- **If the vehicle's battery is disconnected due to situations such as battery or fuse replacement, the anti-entrapment function will be deactivated. Initialize the power window to reactivate the anti-entrapment function. Refer to "Initialization of power window (windows with one-touch auto up/down function)" ☞2-37.**

While closing with the one-touch auto up function, if the window senses a substantial enough object trapped between the window and the window frame, it automatically moves down slightly and stops.

▼ **Off delay function (windows with one-touch auto up/down function)**

The windows can be operated for approximately 42 seconds even after the ignition switch is turned to the "ACC" or "OFF" position. If a front door is opened within 42 seconds, the off delay function is canceled.

▼ **Locking the passengers' windows**

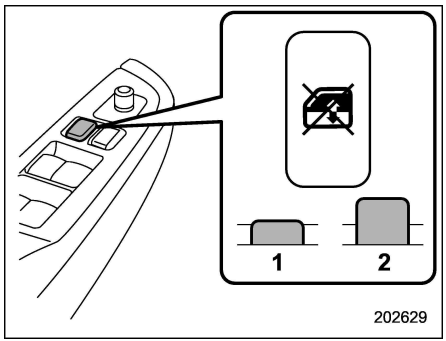

1) Lock
2) Unlock

To lock:
Press the lock switch. When the lock switch is in the lock position, the rear passenger's window switches at the driver side door and the passengers' window switches cannot be operated.

To unlock:
Press the lock switch again.

■ Initialization of power window (windows with one-touch auto up/down function)

If the vehicle's battery is disconnected due to situations such as battery or fuse replacement, the following functions are deactivated.

- One-touch auto up/down function
- Anti-entrapment function

Operate each window according to the following procedure in order to initialize the power window system.

1. Close the driver's door.
2. Turn the ignition switch to the "ON" position.
3. Open the driver's side window halfway by pushing down the power window switch.
4. Pull up the power window switch and close the window completely. Continue pulling up the switch for approximately 1

– CONTINUED –

second after the window is closed completely.

Trunk lid (Legacy)

WARNING

- **To prevent dangerous exhaust gas from entering the vehicle, always keep the trunk lid closed while the engine is running.**
- **Help prevent children, adults or animals from locking themselves in the trunk. On hot or sunny days, the temperature in the trunk could quickly become high enough to cause death or serious heat-related injuries including brain damage to anyone locked inside, particularly for small children.**
- **When leaving the vehicle, close all windows and lock all doors. Also make certain that the trunk is closed.**

■ To open and close the trunk lid from outside

The trunk lid can be opened using the keyless access function or remote keyless entry system. For details, refer to the following section.

- For models with “keyless access with push-button start system”, refer to “Opening trunk (Legacy)” ☞2-17, “Opening the trunk lid (Legacy)” ☞2-26 or “Opening the trunk lid (Legacy)” ☞2-27.
- For models without “keyless access with push-button start system”, refer to “Opening the trunk lid (Legacy)” ☞2-26 or “Opening the trunk lid (Legacy)” ☞2-27.

To close the trunk lid, lightly press the trunk lid down until the latch engages.

NOTE

- **The trunk lid can also be opened using the key. Refer to “Trunk lid (Legacy) – if the trunk lid cannot be opened” ☞9-20.**
- **Do not leave your valuables in the trunk when you leave your vehicle.**
- **Even when the trunk lid cannot be opened using the remote keyless entry system, you can open the trunk lid by using the key. Refer to “Trunk lid (Legacy) – if the trunk lid cannot be opened” ☞9-20.**

- **Under the following conditions, the trunk can be opened without the access key fob.**
  - **The trunk lock/unlock setting is set to on.**
  - **All doors are unlocked.**

The trunk lock/unlock setting can be changed by a SUBARU dealer. Contact your SUBARU dealer to change the setting.

■ To open the trunk lid from inside

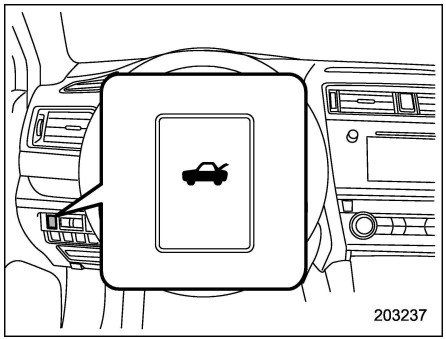

Press and hold the trunk lid opener switch for more than 1 second.

■ Internal trunk lid release handle

The internal trunk lid release handle is a device designed to open the trunk lid from inside the trunk. In the event children or adults become locked inside the trunk, the handle allows them to open the lid. The handle is located on the inside of the trunk lid.

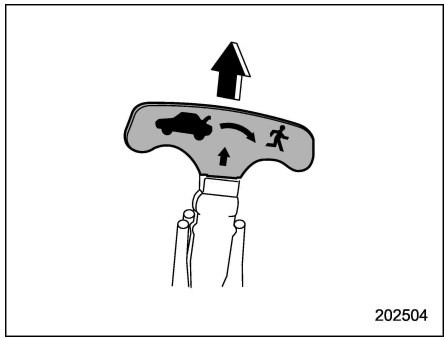

To open the trunk lid from inside the trunk, pull the yellow handle as indicated by the arrow on the handle. This operation unlocks the trunk lid. Then, push up the lid.

The handle is made of material that remains luminescent for approximately an hour in the dark trunk space after it is exposed to ambient light even for a short time.

– CONTINUED –

⚠ WARNING

Never allow any child to get in the trunk and play with the release handle. If the driver starts the vehicle without knowing that a child is inside the trunk and the child opens the lid using the release handle, the child could fall out and be killed or seriously injured.

⚠ CAUTION

- **Do not close the lid while gripping the release handle. The handle may be damaged.**
- **Do not use the handle as a hook to fasten straps or ropes to secure your cargo in the trunk. Such use may result in damage of the handle.**
- **Load the trunk so that cargo cannot strike the release handle. If the cargo hits the handle while the vehicle is being driven, the handle may be pulled and the trunk lid may open. That may cause cargo to fall out of the trunk, which could create a traffic safety hazard.**

▼ Inspection

Perform the following steps at least twice a year to check the release handle for correct operation.

1. Open the trunk lid.

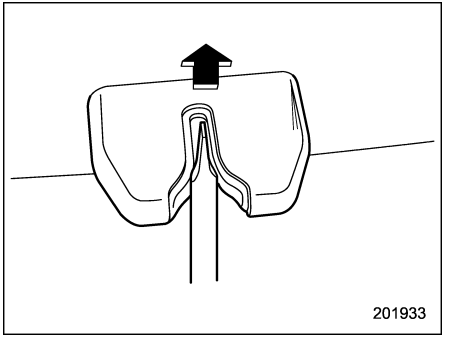

2. Use a flat-head screwdriver with a thin blade. Slide the flat-head screwdriver blade from the slit aperture of the lock assembly fully to the end until you hear a click.

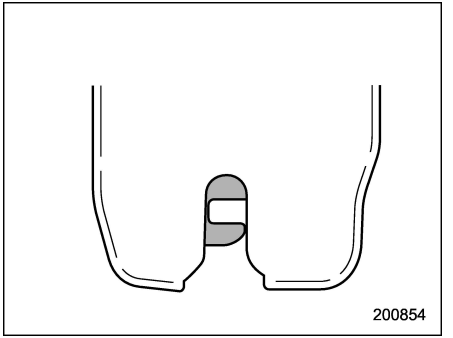

This places the latch in the locked position.

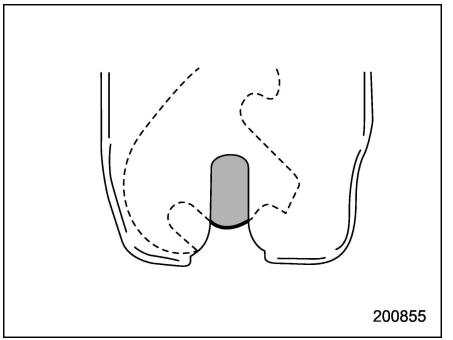

3. Move the release handle, from outside the vehicle, in the direction of the arrow to check if the latch is released.

If the latch is not released, contact your

SUBARU dealer.

In that case, use the key to release the latch, then close the trunk lid.

Also, if the movement of the release handle feels restricted or not entirely smooth during operation, or the handle and/or handle base is cracked, contact your SUBARU dealer.

Rear gate (Outback)

■ Manual rear gate

The rear gate can be locked and unlocked using any of the following systems.

- Power door locking switch: Refer to "Power door locking switches" ☞2-9.
- Keyless access with the push-button start system (if equipped): Refer to "Keyless access with push-button start system" ☞2-10.
- Remote keyless entry system: Refer to "Remote keyless entry system" ☞2-25.

To open:

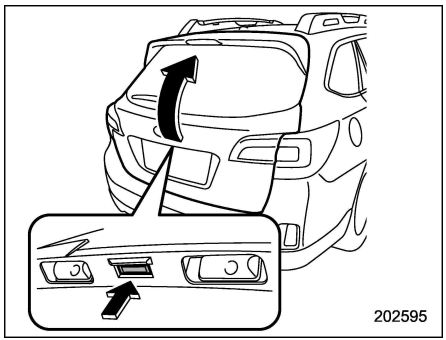

Rear gate opener button

1. Unlock the rear gate.
2. Press and hold the rear gate opener button. The rear gate will open slightly.
3. Hold the rear gate and lift it up slowly.

NOTE

If the rear gate cannot be opened due to a discharged vehicle battery, a malfunction in the door locking/unlocking system or other causes, you can unlock it by manually operating the rear gate lock release lever. For the procedure, refer to "Rear gate (Outback) – if the rear gate cannot be opened" ☞9-21.

To close:

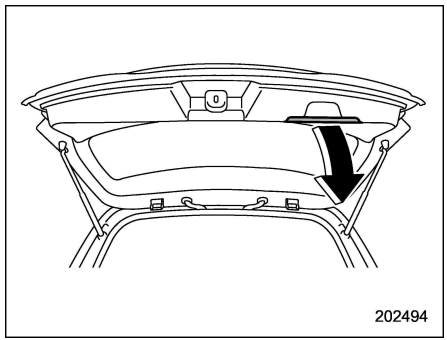

Lower the rear gate slowly and push down firmly until the latch engages.

The rear gate can be lowered easily if you pull it down holding the handle.

– CONTINUED –

WARNING

- To prevent dangerous exhaust gas from entering the vehicle, always keep the rear gate closed while the engine is running.
- Do not attempt to shut the rear gate while holding the recessed grip. Also do not close the rear gate by pulling the handle from inside the cargo space. There is a danger of your hand being caught and injured.

CAUTION

- Do not jam a plastic bag in or place cellophane tape on the rear gate stays or scratch the stays while loading or unloading cargo. That could cause leakage of gas from the stays, which may result in their inability to hold the rear gate open.
- Be careful not to hit your head or face on the rear gate when opening or closing the rear gate and when loading or unloading cargo.

■ Power rear gate (if equipped)

WARNING

- When operating the power rear gate, observe the following precautions. Ignoring the precautions may result in an injury (e. g., anyone's body is hit against the rear gate or is caught in the rear gate, etc.)
  - Make sure there are no people around the rear gate.
  - Never let anyone get close to the rear gate.
- When closing the rear gate, be extremely careful to prevent anyone's fingers, arms, neck, head or other objects from being caught in the rear gate. Otherwise, serious personal injury may be caused by entrapment.
- After opening the rear gate on a slope by using the power rear gate feature, the rear gate may close. Make sure that the rear gate has stopped completely after opening it.
- When leaving the vehicle, always carry the key for safety and never allow an unattended child to remain in the vehicle. Failure to follow this procedure could result in injury to a child operating the power rear gate.
- The driver should be aware of and pay careful attention to his/her responsibilities.
- Use the power rear gate only when the area around the rear gate is clearly visible and when you have checked that there is no danger of people being caught in the gate.

CAUTION

- When closing the rear gate after opening it, make sure to use the power rear gate. If you close the rear gate manually with extra force, the power rear gate may be damaged.
- Do not install any accessories other than genuine SUBARU parts on the rear gate. If the weight of rear gate increases excessively, the rear gate stay cannot support the rear gate sufficiently when opening the rear gate. Also, the power rear gate may not function properly or

may malfunction.

- **Do not touch the driving rod. Doing so may result in injury or damage.**

The power rear gate operates only when all of the following conditions are satisfied.

- The vehicle is stopped completely.
- The outside temperature is within a range from −22°F to 140°F (from −30°C to 60°C).
- The ignition switch is in the "LOCK"/ "OFF" or "ACC" position. Or, the ignition switch is in the "ON" position and the select lever is in the "P" position.

We recommend using the power rear gate function in most circumstances instead of manual operation.

NOTE

- **Do not press the power rear gate button repeatedly while the power rear gate is operating. Otherwise, the system may ignore the button operation in order to avoid being damaged.**
- **It is not possible to stop the rear gate temporarily while opening between the completely closed position and approximately 2 in (5 cm) open. If you press one of the power rear gate buttons briefly during this range, the rear gate will be closed.**
- **If the vehicle starts to move while the power rear gate is operating, the system sounds a buzzer and closes the rear gate automatically. At this time, if the system detects jamming, it will deactivate the power rear gate and the rear gate will not be closed. If this occurs, close the rear gate manually. For details, refer to "Manual rear gate" ☞2-41.**
- **If you try to open the rear gate using the power rear gate function immediately after closing the rear gate using the power rear gate function, an electronic chirp will sound and the rear gate will not open. Wait for a while before trying to open the rear gate via the power rear gate function.**
- **If either of the operating conditions has not been satisfied while operating the power rear gate, an electronic chirp will sound and the power rear gate will be deactivated. In this case, the rear gate may stop opening or closing suddenly.**

▼ Operation

NOTE

- **The rear gate will remain unlocked even after closing it. Always lock the rear gate when leaving the vehicle.**
- **If you cannot open/close the rear gate by performing the operation described here, a short electronic chirp will sound three times (beep, beep, beep).**

▽ By the power rear gate button (other than the buttons on the rear gate)

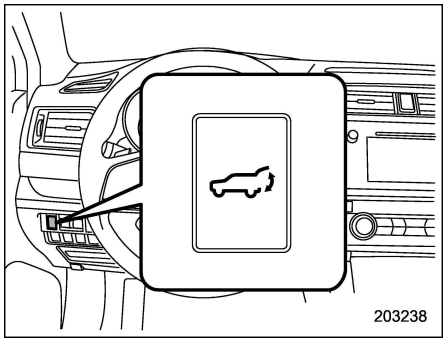

Power rear gate button on the instrument panel

– CONTINUED –

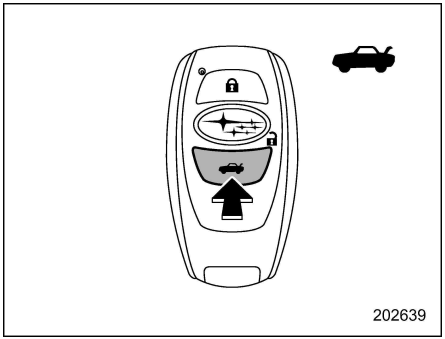

Power rear gate button on the access key fob

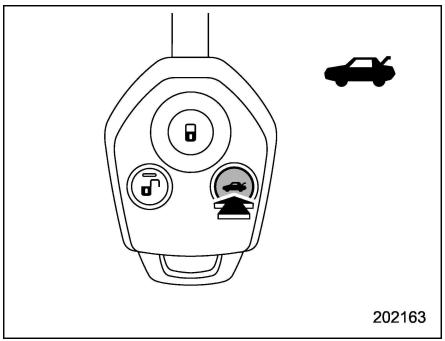

Power rear gate button on the transmitter

To open the rear gate:

Press and hold the power rear gate button when the rear gate is closed. The rear gate will open automatically. Then an electronic chirp and the hazard warning flashers will operate as follows:

- When operating the power rear gate button on the instrument panel/transmitter: sounds and flashes twice.
- When operating the power rear gate button on the access key fob: sounds and flashes four times.

NOTE

While the rear gate is locked, you cannot open the rear gate by operating the power rear gate button on the instrument panel. In such a case, unlock the rear gate before operating the power rear gate button.

To stop the rear gate midway:

Briefly press the power rear gate button while the rear gate is being opened. Then an electronic chirp will sound twice and the hazard warning flashers will flash twice.

If you press the power rear gate button again, the rear gate will close.

You can open the rear gate by pressing the power rear gate button briefly while the rear gate is being closed.

To close the rear gate:

Press and hold the power rear gate button. Then an electronic chirp will sound twice and the hazard warning flashers will flash twice. If you briefly press the power rear gate button again, the rear gate will open.

▽ By the buttons on the rear gate

NOTE

After performing the following procedures, an electronic chirp will sound twice and the hazard warning flashers will flash twice.

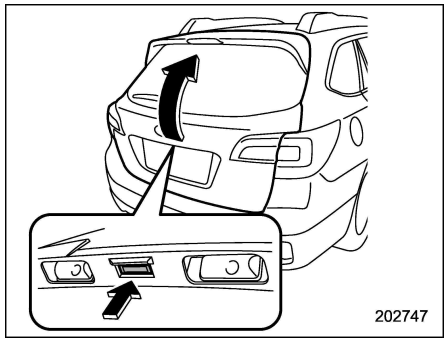

Rear gate opener button

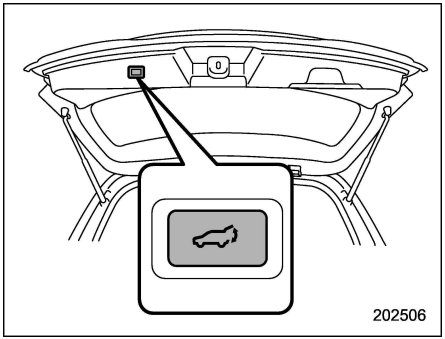

Power rear gate button on the inside edge of the rear gate

To open the rear gate:

1. For models with “keyless access with push-button start system”, carry the access key fob. For models without “keyless access with push-button start system”, unlock the rear gate.
2. Briefly press the rear gate opener button when the rear gate is closed.

The rear gate will open automatically.

To stop the rear gate midway:

Briefly press either of the following buttons while the rear gate is being opened.

- rear gate opener button
- power rear gate button on the inside edge of the rear gate

If you press the power rear gate button again, the rear gate will close. You can open the rear gate by pressing the power rear gate button briefly while the rear gate is being closed.

To close the rear gate:

Briefly press either of the following buttons.

- rear gate opener button
- power rear gate button on the inside edge of the rear gate

If you press the power rear gate button again, the rear gate will open.

▼ Manual operation

NOTE

Using the power rear gate operation is recommended. Manual operation will require physical effort.

The power rear gate can be closed manually. Refer to “Manual rear gate” ☞2-41.

▼ Memory function

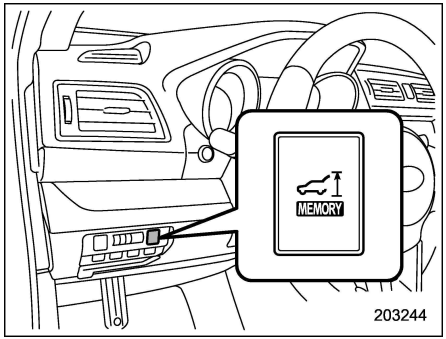

Memory switch

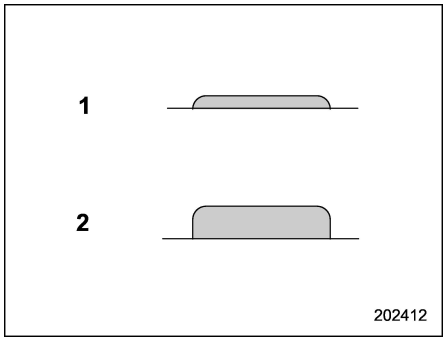

Memory switch status
1) ON status
2) OFF status

Your desired rear gate height can be

– CONTINUED –

registered.

Registration of the rear gate height:

To register the rear gate height, perform the following procedures while the ignition switch is in the “LOCK”/“OFF” position.

1. Open the rear gate by using the power rear gate function.
2. With the rear gate at the desired height, stop it by using the power rear gate function.
3. Press the memory switch to select the “ON” status.

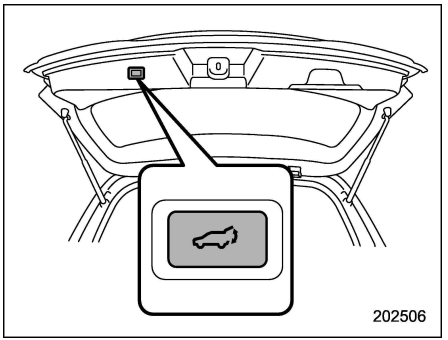

Power rear gate button on the inside edge of the rear gate

4. With the rear gate at the desired height, press and hold the power rear gate button on the inside edge of the rear gate until an electronic chirp is heard and the hazard warning flashers flash three times. The electronic chirp and the flashing hazard warning flashers confirm the selected rear gate height has been registered.

NOTE

- **To change the registered height, press the memory switch to select the “OFF” status and perform the registering procedure again.**
- **It is possible to register the height from approximately 2 in (5 cm) or more from the completely closed position.**

Retrieval of the rear gate height:

To open the rear gate and stop it at the registered height, perform the following procedure.

1. Press the memory switch to select the ON status.
2. Press and hold any of the power rear gate switches.

Even if any of the power rear gate switches are pressed and held while the memory switch is in the OFF status, you can stop it at the registered height by pressing the memory switch to select the ON status before the rear gate reaches the registered height.

NOTE

The rear gate will open to the position that is stored in the memory function even if the rear gate is opened by the reverse function.

▼ **Reverse function**

⚠ WARNING

- **Do not let parts of your body get caught when operating the reverse function. If the reverse function does not operate for some reason, this may lead to serious injury or accidents.**
- **The reverse function may not operate if foreign objects are caught in the rear gate just before it closes completely. Be careful not to catch your fingers and other body parts.**
- **The reverse function may not operate depending on the object shape and the manner in which it was caught. Be careful not to catch your fingers and other body parts.**

CAUTION

- **If the reverse function is operated 3 times consecutively, automatic opening and closing of the power rear gate function will be canceled and the rear gate will stop opening or closing suddenly. However, the rear gate may open or close depending on the rear gate height when automatic operation is ceased. Be careful that the rear gate does not hit anyone's head or face, etc. and that fingers and baggage, etc. are not caught in it.**
- **Take care not to damage the touch sensors. Otherwise, the reverse function may cease to operate.**

If, while opening or closing using power rear gate, the rear gate catches persons or baggage or hits an obstacle, an electronic chirp will sound 3 times and the rear gate will operate as follows.

When opening the rear gate: The rear gate will automatically close.

When closing the rear gate: The rear gate will automatically open.

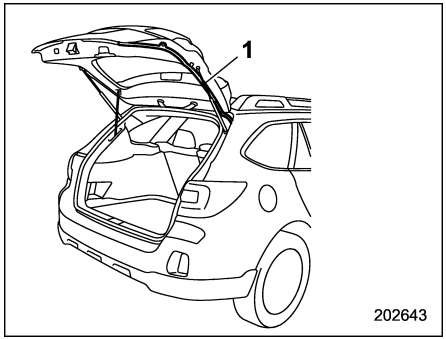

1) Touch sensor

Touch sensors are attached on the left and right edges of the rear gate. If the touch sensors detect fingers, baggage, etc. while closing by the power rear gate function, an electronic chirp will sounds 3 times and the rear gate will open automatically.

NOTE

When the rear gate is opened using the reverse function, it will be opened fully or to the height registered in the memory function.

▼ Rear gate drop prevention function

If, while fully opened via the power rear gate function, the rear gate is lowered by the weight of snow and such, an electronic chirp will sound and the rear gate drop prevention function will apply braking to the rear gate so that it prevents a rapid closure of the rear gate.

NOTE

- **If there is snow on the rear gate, only use the power rear gate function after removing the snow.**
- **If you close the rear gate manually just after the rear gate is fully opened using the power rear gate function, the rear gate drop prevention function will detect a rapid closure of the rear gate and apply braking to the rear gate. In this case, this is not a malfunction.**

▼ Selecting audible signal operation

Using an electronic chirp, the power rear gate will give you an audible signal before starting its operation. If desired, the audible signal can be turned off by a SUBARU dealer. Consult your SUBARU dealer for details.

For models with "keyless access with push-button start system", you can turn the audible signal off by operating the multi information display. For details, refer to

– CONTINUED –

“Keyless Entry System” ☞3-44.

The ON/OFF setting of the audible signal also works as the audible signal settings for the “remote keyless entry system” and the “keyless access with push-button start system”. However, for the warning chime such as that caused by “Reverse function” ☞2-46 or “Rear gate drop prevention function” ☞2-47, it cannot be set as non-operational.

Moonroof (if equipped)

⚠ WARNING

Never let anyone’s hands, arms, head or any objects protrude from the moonroof. A person could be seriously injured if the vehicle stops suddenly or turns sharply or if the vehicle is involved in an accident.

To avoid serious personal injury caused by entrapment, you must conform to the following instructions without exception.

- **Before closing the moonroof, make sure that no one’s hands, arms, head or other objects will be accidentally caught in the moonroof.**
- **Before leaving the vehicle, always remove the key from the ignition switch for safety (models without “keyless access with push-button start system”) and never allow an unattended child to remain in the vehicle. Failure to follow this procedure could result in injury to a child operating the moonroof.**
- **Never try to check the anti-entrapment function by deliberately placing part of your body in the moonroof.**

⚠ CAUTION

- **Do not sit on the edge of the open moonroof.**
- **Do not operate the moonroof if falling snow or extremely cold conditions have caused it to freeze shut.**
- **The anti-entrapment function does not operate when the moonroof is being tilted down. Be sure to confirm that it is safe to do so before tilting the moonroof down.**
- **If the moonroof does not close, we recommend that you have the system checked by a SUBARU dealer.**

The moonroof has both tilting and sliding functions.

The moonroof operates only when the ignition switch is in the “ON” position.

■ Moonroof switches

▼ Tilting moonroof

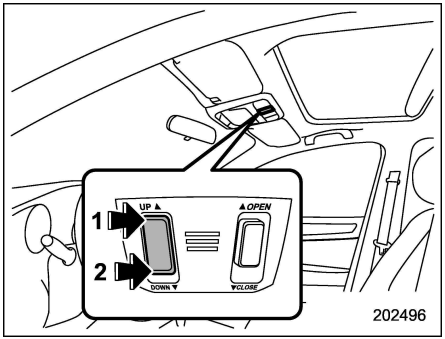

"UP/DOWN" switch
1) Tilting up
2) Laying down

The tilting up function will only operate when the moonroof is fully closed. The laying down function will only operate when the moonroof is tilted.

Press the rear side of the "UP/DOWN" switch to tilt up the moonroof.

Press the front side of the "UP/DOWN" switch to lay down the moonroof.

Release the switch after the moonroof has been tilted or has been laid down completely. Pressing the switch continuously may cause damage to the moonroof.

NOTE

One-touch operation does not take place when the moonroof is lowered. Press the switch continuously to lower the moonroof.

▼ Sliding moonroof

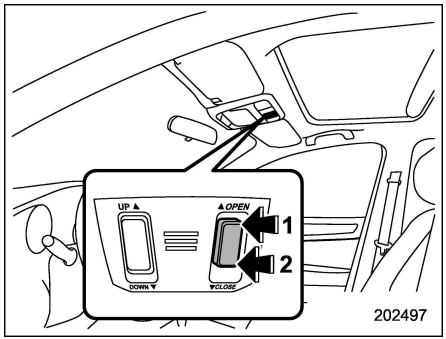

"OPEN/CLOSE" switch
1) Open
2) Close

Press the rear side of the "OPEN/CLOSE" switch to open the moonroof. The sun shade will also be opened together with the moonroof. The moonroof will stop at a position approximately 3 in (8 cm) away from the fully opened position. Press the switch again to open the moonroof completely.

Press the front side of the "OPEN/CLOSE" switch to close the moonroof.

To stop the moonroof at a selected midway position while opening or closing it, momentarily press the front side or rear side of the switch.

After washing the vehicle or after it rains, wipe away water on the roof prior to opening the moonroof to prevent drops of water from falling into the passenger compartment.

NOTE

For the sake of safety, it is recommended that you avoid driving with the moonroof fully opened.

▼ Anti-entrapment function

When the moonroof senses a substantial enough object trapped between its glass and the vehicle's roof during closure, it automatically moves back to the fully open position and stops there. The anti-entrapment function may also be activated by a strong shock on the moonroof even when there is nothing trapped.

⚠ CAUTION

Never attempt to test this function using fingers, hands or other parts of your body.

– CONTINUED –

■ Sun shade

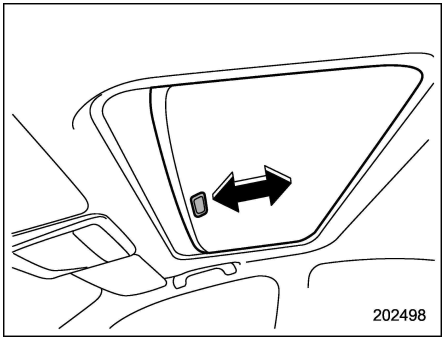

The sun shade can be slid forward or backward by hand while the moonroof is closed.

If the moonroof is opened, the sun shade also moves back.

Ignition switch (models without push-button start system) 3-3
LOCK 3-3
ACC 3-4
ON 3-4
START 3-4
Key reminder chime 3-4
Ignition switch light 3-4
Push-button ignition switch (models with push-button start system) 3-5
Safety precautions 3-5
Operating range for push-button start system 3-5
Switching power status 3-6
When access key fob does not operate properly 3-7
Hazard warning flasher 3-7
Meters and gauges 3-7
Combination meter illumination 3-7
Canceling the function for meter/gauge needle movement upon turning on the ignition switch 3-8
Speedometer 3-8
Odometer 3-8
Double trip meter 3-9
Tachometer 3-9
Fuel gauge 3-10
Temperature gauge 3-11
ECO gauge 3-11
Warning and indicator lights 3-12
Seatbelt warning light and chime 3-12
SRS airbag system warning light 3-14
Front passenger's frontal airbag ON and OFF indicators 3-14
CHECK ENGINE warning light/Malfunction indicator light 3-15
Charge warning light 3-15
Oil pressure warning light 3-15
Engine low oil level warning indicator 3-16
AT OIL TEMP warning light 3-16
Low tire pressure warning light (U.S. spec. models) 3-16
ABS warning light 3-18
Brake system warning light 3-18
Electronic parking brake indicator light 3-20
Hill Holder indicator light 3-21
Low fuel warning light 3-21
Door open indicator 3-21
Windshield washer fluid warning indicator 3-22
All-Wheel Drive warning light 3-22
Power steering warning light 3-22
Vehicle Dynamics Control warning light/Vehicle Dynamics Control operation indicator light 3-23
Vehicle Dynamics Control OFF indicator light 3-24
Warning chimes and warning indicator of the keyless access with push-button start system (if equipped) 3-24
Security indicator light 3-29
Select lever/gear position indicator 3-30
Turn signal indicator lights 3-30
High beam indicator light 3-30
High beam assist indicator (green) (if equipped) 3-30
High beam assist warning indicator (yellow) (if equipped) 3-30
Cruise control indicator 3-30
Cruise control set indicator 3-31

Automatic headlight beam leveler warning light (models with LED headlights) 3-31
LED headlight warning light (models with LED headlights) 3-31
Steering Responsive Headlight warning light/ Steering Responsive Headlight OFF indicator light (if equipped) 3-31
Headlight indicator light 3-31
Front fog light indicator light (if equipped) 3-31
X-mode indicator (if equipped) 3-31
Hill descent control indicator (if equipped) 3-31
BSD/RCTA warning indicator (if equipped) 3-31
BSD/RCTA OFF indicator (if equipped) 3-31
Icy road surface warning indicator 3-32
RAB warning indicator (if equipped) 3-32
RAB OFF indicator (if equipped) 3-32
Sonar audible alarm OFF indicator (if equipped) 3-32
Information display 3-32
Clock 3-33
Climate control mode indicators 3-33
Outside temperature indicator 3-34
Multi information display 3-34
Basic operation 3-35
Welcome screen and Good-bye screen 3-35
Warning screen 3-36
Basic screens 3-36
Telltale screen 3-39
Menu screens 3-40
Light control switch 3-45
Headlights 3-46
High/low beam change (dimmer) 3-48
High beam assist function (if equipped) 3-48
Headlight flasher 3-53
Daytime running light system 3-53
Steering Responsive Headlight (SRH) (if equipped) 3-54
Headlight beam leveler (models with LED headlights) 3-55
Turn signal lever 3-55
One-touch lane changer 3-56
Illumination brightness control 3-56
Auto dimmer cancel function 3-56
Front fog light switch (if equipped) 3-57
Wiper and washer 3-57
Windshield wiper and washer switches 3-59
Rear window wiper and washer switch (Outback) 3-60
Defogger and deicer 3-61
Mirrors 3-63
Inside mirror (without auto-dimming function) (if equipped) 3-63
Auto-dimming mirror/compass with HomeLink® (U.S.-spec. models without EyeSight system - if equipped) 3-63
Auto-dimming mirror with HomeLink® (except U.S.-spec. models - if equipped) 3-69
Auto-dimming mirror/compass with HomeLink® (models with EyeSight system) 3-74
Outside mirrors 3-81
Tilt/telescopic steering wheel 3-82
Horn 3-83
Heated Steering Wheel system (if equipped) 3-83

Ignition switch (models without push-button start system)

WARNING

- **Never turn the ignition switch to "LOCK" while the vehicle is being driven or towed because that will lock the steering wheel, preventing steering control. And when the engine is turned off, it takes a much greater effort than usual to steer.**
- **Before leaving the vehicle, always remove the key from the ignition switch for safety and never allow an unattended child to remain in the vehicle. Failure to follow this procedure could result in injury to a child or others. Children could operate the power windows, the moonroof or other controls or even make the vehicle move.**

CAUTION

Do not attach a large key holder or key case to either key. If it banged against your knees or hands while you are driving, it could turn the ignition switch from the "ON" position to the "ACC" or "LOCK" position, thereby stopping the engine. Also, if the key is attached to a keyholder or to a large bunch of other keys, centrifugal force may act on it as the vehicle moves, resulting in unwanted turning of the ignition switch.

The ignition switch has four positions: LOCK, ACC, ON and START.

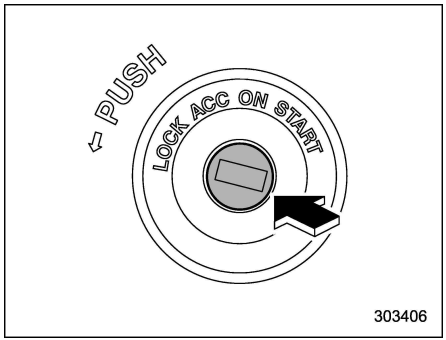

NOTE

- **Keep the ignition switch in the "LOCK" position when the engine is not running.**
- **Using electrical accessories for a long time with the ignition switch in the "ON" or "ACC" position can cause the battery to go dead.**
- **If the ignition switch will not move from the "LOCK" position to the "ACC" position, turn the steering wheel slightly to the left and right as you turn the ignition switch.**

■ LOCK

The key can only be inserted or removed in this position. The ignition switch will lock the steering wheel when you remove the key.

If turning the key is difficult, turn the steering wheel slightly to the right and left as you turn the key.

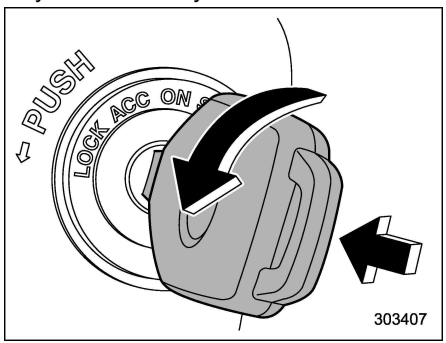

The key can be turned from "ACC" to "LOCK" only when the key is pushed in while turning it (all models) and the select lever is in the "P" position.

– CONTINUED –

■ ACC

In this position the electrical accessories (radio, accessory power outlet, etc.) can be used.

■ ON

This is the normal operating position after the engine is started.

■ START

⚠ CAUTION

Do not turn the ignition switch to the "START" position while the engine is running.

The engine is started in this position. The starter cranks the engine to start it. When the key is released (after the engine has started), the key automatically returns to the "ON" position.

If the engine does not start with your registered key, pull out the key once (at this time, the security indicator light will blink), reinsert the key in the ignition switch and then try to start the engine again.

NOTE

The engine may not start in the following cases:

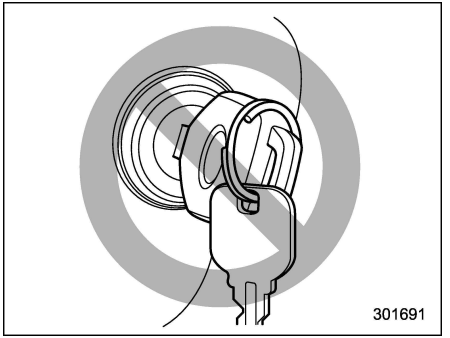

- **The key grip is touching another key or a metallic key holder.**

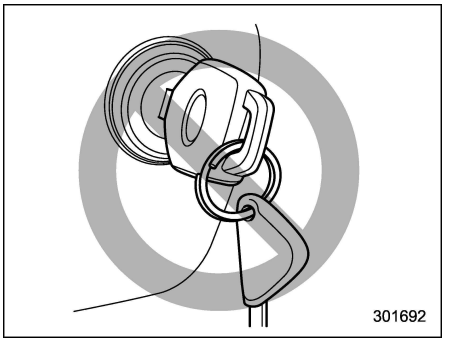

- **The key is near another key that contains an immobilizer transponder.**
- **The key is near or touching another transmitter.**

■ Key reminder chime

The reminder chime sounds when the driver's door opens and the key is in the "LOCK" or "ACC" positions. The chime stops when the ignition switch is turned to the "ON" position or the key is removed from the ignition switch.

■ Ignition switch light

For easy access to the ignition switch in the dark, the ignition switch light illuminates when driver's door is opened or when the driver's door is unlocked using the remote keyless entry transmitter.

The light remains illuminated for approximately 30 seconds and gradually turns off under the following conditions.

- When the driver's door is closed
- When the doors are unlocked using the remote keyless entry transmitter

The light gradually turns off under the following conditions.

- When the ignition switch is turned to the "ON" position
- When the doors are locked using the remote keyless entry transmitter

Push-button ignition switch (models with push-button start system)

■ Safety precautions

Refer to “Safety precautions” ☞2-11.

■ Operating range for push-button start system

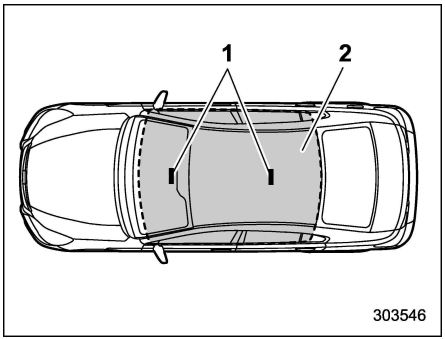

Legacy
1) Antenna
2) Operating range

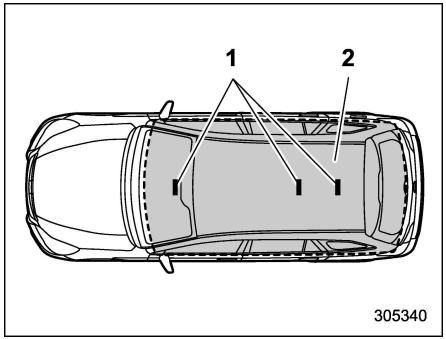

Outback
1) Antenna
2) Operating range

NOTE

● If the access key fob is not detected within the operating range of the antennas inside the vehicle, the push-button ignition switch and the engine start cannot be operated.

● Even when the access key fob is outside the vehicle, if it is placed too close to the glass, it may be possible to switch the power or to start the engine.

● Do not leave the access key fob in the following places. It may become impossible to operate the push-button ignition switch and the engine start.

– On the instrument panel
– On the floor
– Inside the glove box
– Inside the door trim pocket
– On the rear seat
– On the rear shelf (Legacy)
– Inside the trunk (Legacy)
– At the corner of the cargo area (Outback)

● When operating the push-button ignition switch or starting the engine, if the access key battery is discharged, perform the procedure described in “Access key fob – if access key fob does not operate properly” ☞9-19. In such a case, replace the battery immediately. Refer to “Replacing battery of access key fob” ☞11-48.

– CONTINUED –

■ Switching power status

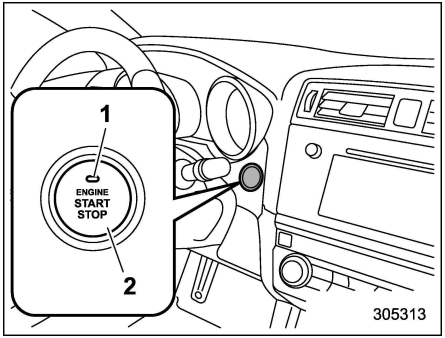

1) Operation indicator
2) Push-button ignition switch

The power status is switched every time the push-button ignition switch is pressed.

1. Carry the access key fob, and sit in the driver's seat.
2. Shift the select lever into the "P" position.
3. Press the push-button ignition switch without depressing the brake pedal. Every time the button is pressed, the power is switched in the sequence of "OFF", "ACC", "ON" and "OFF". When the engine is stopped and the push-button ignition switch is in "ACC" or "ON", the operation indicator on the push-button ignition switch illuminates in orange.

Power status	Indicator color	Operation
OFF	Turned off	Power is turned off.
ACC	Orange	The following systems can be used: audio and accessory power outlet.
ON	Orange (while engine is stopped)	All electrical systems can be used.
	Turned off (while engine is running)	

⚠ CAUTION

- **To prevent the vehicle battery from discharging, do not leave the push-button ignition switch in the "ON" or "ACC" position for a long time.**
- **To avoid a malfunction, observe the following precautions.**
  - **Do not spill drinks or other liquids on the push-button ignition switch.**
  - **Do not touch the push-button ignition switch with a hand that is soiled with oil or other contaminants.**
- **If the push-button ignition switch does not operate smoothly, stop the operation. Contact a SUBARU dealer immediately.**
- **If the push-button ignition switch does not illuminate even when the instrument panel illumination is turned on, have the vehicle inspected at a SUBARU dealer.**
- **If the vehicle was left in the hot sun for a long time, the surface of the push-button ignition switch may get hot. Be careful not to burn yourself.**

NOTE

- **When operating the push-button ignition switch, firmly press it all the way.**
- **If the push-button ignition switch is pressed quickly, the power may not turn on or off.**
- **If the indicator light on the push-button ignition switch flashes in green when the push-button ignition switch is pressed, steering is locked. When this occurs, press the push-button ignition switch while turning the steering wheel left and right.**

▼ **Battery drainage prevention function**

When the push-button ignition switch is left in the “ACC” or “ON” position for approximately 1 hour, the push-button ignition switch will be automatically switched to “OFF” to prevent the battery from going dead. This function is activated when the select lever is in the “P” position.

■ When access key fob does not operate properly

Refer to “Access key fob – if access key fob does not operate properly” ☞9-19.

Hazard warning flasher

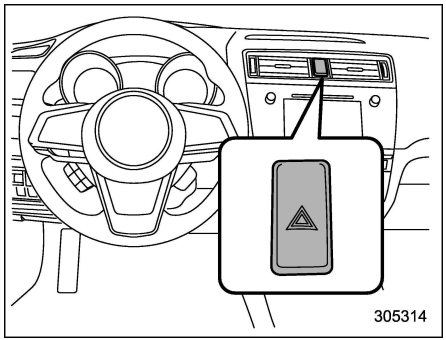

The hazard warning flasher is used to warn other drivers when you have to park your vehicle under emergency conditions. The hazard warning flasher works with the ignition switch in any position.

To turn on the hazard warning flasher, press the hazard warning button on the instrument panel. All the turn signal lights and the turn signal indicator lights will flash. To turn off the flasher, press the button again.

NOTE

When the hazard warning flasher is on, the turn signals do not work.

Meters and gauges

NOTE

Liquid crystal displays are used in some of the meters and gauges in the combination meter. You will find their indications hard to see if you wear polarized glasses.

■ Combination meter illumination

When the ignition switch is turned to the “ON” position, the various parts of the combination meter are illuminated in the following sequence.

1. Warning lights, indicator lights, meter needles, gauge needles and liquid crystal display illuminate.
2. The meter and gauge needles sweep one time.
3. Dials and indicators in meters and gauges light up.
4. Regular illumination (for driving) begins.

– CONTINUED –

NOTE

This sequence of operations may not take place if you quickly turn the ignition switch to start the engine. This is not a malfunction.

■ Canceling the function for meter/gauge needle movement upon turning on the ignition switch

It is possible to activate or deactivate the movement of the meter needles and gauge needles that takes place when the ignition switch is turned to the “ON” position. For details, perform the procedures described in “Gauge Initial Movement” ☞3-43.

■ Speedometer

The speedometer shows the vehicle speed.

■ Odometer

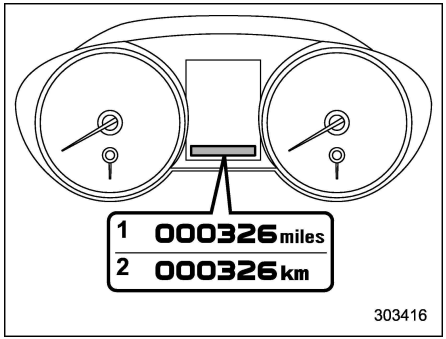

1) U.S. spec. models
2) Except U.S. spec. models

This meter displays the odometer when the ignition switch is in the “ON” position.

The odometer shows the total distance that the vehicle has been driven.

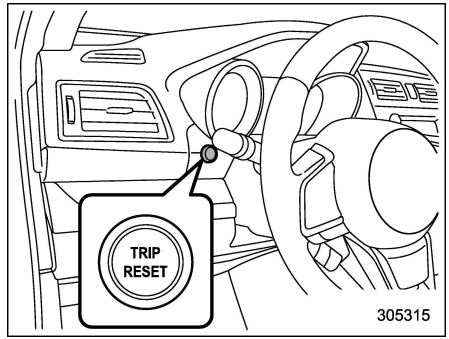

Trip reset switch

If you press the trip reset switch when the ignition switch is in the “LOCK”/“OFF” or “ACC” position, the odometer/trip meter will light up. If you do not press the trip reset switch within 10 seconds of illumination of the odometer/trip meter, the odometer/trip meter will turn off.

Also, if you open and close the driver’s door within 10 seconds of illumination of the odometer/trip meter, the odometer/trip meter will turn off.

■ Double trip meter

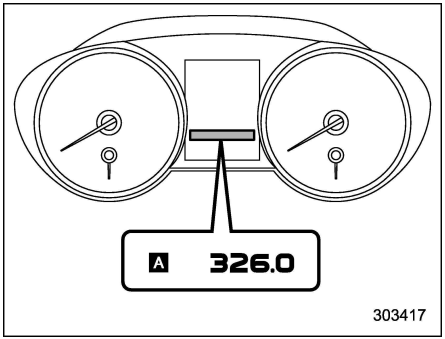

This meter displays the two trip meters when the ignition switch is in the “ON” position.

The trip meter shows the distance that the vehicle has been driven since you last set it to zero.

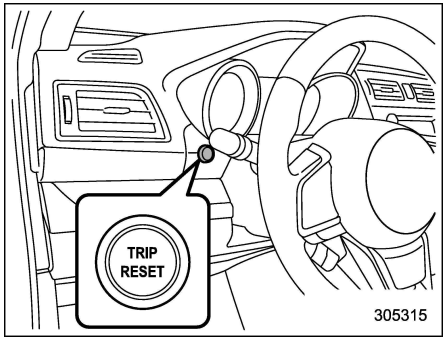

Trip reset switch

If you press the trip reset switch when the ignition switch is in the “LOCK”/“OFF” or “ACC” position, the odometer/trip meter will light up. It is possible to switch between the A trip meter and B trip meter indications while the odometer/trip meter is lit up. If you do not press the trip reset switch within 10 seconds of illumination of the odometer/trip meter, the odometer/trip meter will turn off.

Also, if you open and close the driver’s door within 10 seconds of illumination of the odometer/trip meter, the odometer/trip meter will turn off.

The display can be switched as shown in the following illustration by pressing the trip reset switch.

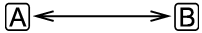

To set the trip meter to zero, select the A trip or B trip meter by pressing the trip reset switch and keep the switch pressed for more than 2 seconds.

⚠ CAUTION

To ensure safety, do not attempt to change the function of the indicator during driving, as an accident could result.

NOTE

If the connection between the combination meter and battery is broken for any reason such as vehicle maintenance or fuse replacement, the data recorded on the trip meter will be lost.

■ Tachometer

The tachometer shows the engine speed in thousands of revolutions per minute.

⚠ CAUTION

Do not operate the engine with the pointer of the tachometer in the red zone. In this range, fuel injection will be cut by the engine control module

– CONTINUED –

to protect the engine from overreving. The engine will resume running normally after the engine speed is reduced below the red zone.

■ Fuel gauge

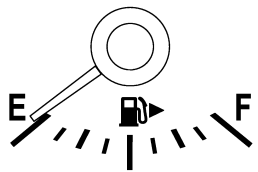

303409

The fuel gauge shows the approximate amount of fuel remaining in the tank.

When the ignition switch is in the “LOCK”/“OFF” or “ACC” position, the fuel gauge shows “E” even if the fuel tank contains fuel.

The gauge may move slightly due to fuel level movement in the tank (e.g., during braking, turning or acceleration).

If you press the trip reset switch while the ignition switch is in the “LOCK”/“OFF” or “ACC” position, the fuel gauge’s dial will light up and the needle will indicate the amount of fuel remaining in the tank.

If, while the fuel gauge needle is indicating the amount of fuel remaining in the tank, you (a) do not press the trip reset switch for 10 seconds or (b) open and close the driver’s door, the fuel gauge needle will drop to the “E” position and the dial and needle will turn off.

NOTE

200253

You will see the “⛽▶” sign in the fuel gauge.

This indicates that the fuel filler door (lid) is located on the right side of the vehicle.

■ Temperature gauge

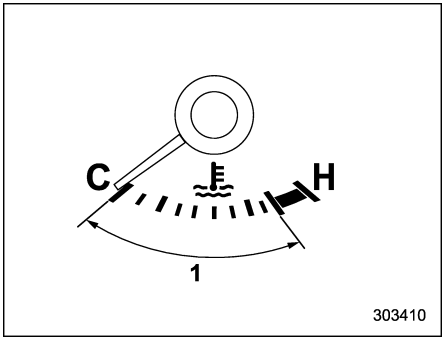

1) Normal operating range

The temperature gauge shows engine coolant temperature when the ignition switch is in the “ON” position.

The coolant temperature will vary in accordance with the outside temperature and driving conditions.

We recommend that you drive moderately until the pointer of the temperature gauge reaches near the middle of the range. Engine operation is optimum with the engine coolant at this temperature range and high revving operation when the engine is not warmed up enough should be avoided.

⚠ CAUTION

If the pointer exceeds the normal operating range, safely stop the vehicle as soon as possible.

Refer to “Engine overheating” ☞9-14.

■ ECO gauge

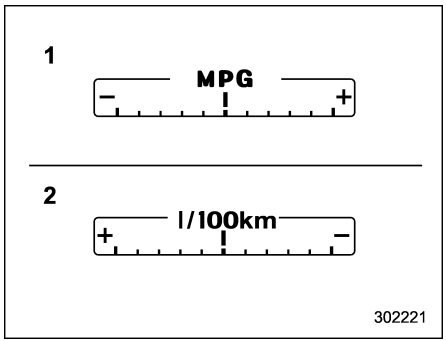

1) U.S. spec. models
2) Except U.S. spec. models

The ECO gauge shows the difference between the average rate of fuel consumption since the trip meter was last reset and the current rate of fuel consumption.

The ECO gauge indicates the current fuel efficiency as shown in the following chart.

Displayed unit	Needle position	
	“+” side	“-” side
MPG	Better	Poorer
l/100km	Poorer	Better

NOTE

- **The ECO gauge shows only an approximate indication.**
- **After resetting the trip meter, the average rate of fuel consumption is not shown until driving 0.6 mile (1 km). Until that time, the ECO gauge does not operate.**

Warning and indicator lights

Several of the warning and indicator lights illuminate momentarily and then go out when the ignition switch is initially turned to the “ON” position. This permits checking the operation of the bulbs.

Apply the parking brake and turn the ignition switch to the “ON” position. For the system check, the following lights illuminate and turn off after several seconds or after the engine has started:

: Seatbelt warning light
(The seatbelt warning light turns off only when the driver fastens the seatbelt.)

: Front passenger’s seatbelt warning light
(The seatbelt warning light turns off only when the front seat passenger fastens the seatbelt.)

: SRS airbag system warning light

ON / : Front passenger’s frontal airbag ON indicator light

OFF / : Front passenger’s frontal airbag OFF indicator light

CHECK ENGINE / : CHECK ENGINE warning light/ Malfunction indicator light

: Charge warning light

: Oil pressure warning light

AT OIL TEMP: AT OIL TEMP warning light

ABS / (ABS): ABS warning light

: Vehicle Dynamics Control warning light/ Vehicle Dynamics Control operation indicator light

OFF: Vehicle Dynamics Control OFF indicator light

BRAKE / (!): Brake system warning light

: Hill Holder indicator light

AWD: All-Wheel Drive warning light

: Power steering warning light

(!): Low tire pressure warning light (U.S. spec. models)

: Low fuel warning light

: Hill descent control indicator (if equipped)

: Automatic headlight beam leveler warning light (if equipped)

If any lights fail to illuminate, it indicates a burned-out bulb or a malfunction of the corresponding system.

Consult your authorized SUBARU dealer for repair.

■ Seatbelt warning light and chime

Your vehicle is equipped with a seatbelt warning device at the driver’s and front passenger’s seat, as required by current safety standards.

With the ignition switch turned to the “ON” position, this device reminds the driver and front passenger to fasten their seatbelts by the warning lights in the locations indicated in the following illustration and a chime.

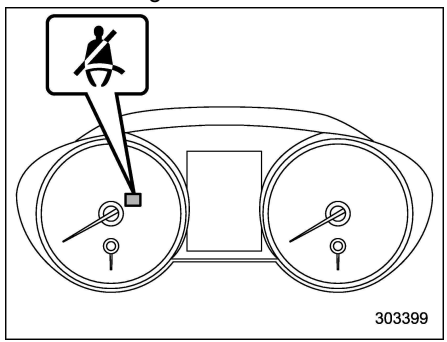

Driver’s warning light

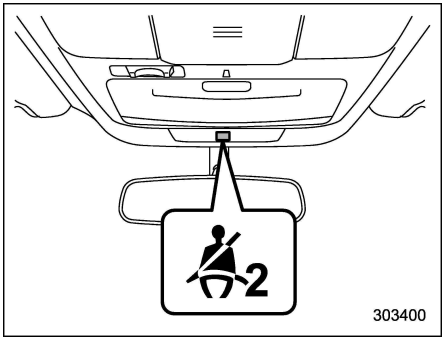

Front passenger's warning light

▼ Operation

If the driver and/or front passenger have/has not yet fastened the seatbelt(s) when the ignition switch is turned to the "ON" position, the seatbelt warning light(s) will flash for 6 seconds, to warn that the seatbelt(s) is/are unfastened. If the driver's seatbelt is not fastened, a chime will also sound simultaneously.

NOTE

- **If the driver's and/or front passenger's seatbelt(s) are/is still not fastened 6 seconds later, the seatbelt warning device operates as follows according to the vehicle speed.**
  - **– At speeds lower than approximately 9 mph (15 km/h)**
    The warning light(s) for unfastened seatbelt(s) will alternate between steady illumination and flashing at 15-second intervals. The chime will not sound.
  - **– At speeds higher than approximately 9 mph (15 km/h)**
    The warning light(s) for unfastened seatbelt(s) will alternate between flashing and steady illumination at 15-second intervals and the chime will sound while the warning light(s) is/are flashing.

If there is no passenger on the front passenger's seat, the seatbelt warning device for the front passenger's seat will be deactivated. The front passenger's occupant detection system monitors whether or not there is a passenger on the front passenger's seat.

Observe the following precautions. Failure to do so may prevent the device from functioning correctly or cause the device to fail.

- Do not install any accessory such as a table or TV onto the seatback.
- Do not store a heavy load in the seatback pocket.
- Do not allow the rear seat occupant to place his/her hands or legs on the front passenger's seatback, or allow him/her to pull the seatback.
- Do not use front seats with their backward-forward position and seatback not being locked into place securely. If any of them are not locked securely, adjust them again. For adjusting procedure, refer to "Manual seat" ☞1-4 (models equipped with manual seats only).

If the seatbelt warning device for the front passenger's seat does not function correctly (e.g., it is activated even when the front passenger's seat is empty or it is deactivated even when the front passenger has not fastened his/her seatbelt), take the following actions.

- Ensure that no article is placed on the seat other than a child restraint system and its child occupant.
- Ensure that there is no article left in the seatback pocket.
- Ensure that the backward-forward position and seatback of front passenger's seat are locked into place securely by moving the seat back and forth. (Models equipped with manual seats only)

If still the seatbelt warning device for front passenger's seat does not function correctly after taking relevant corrective actions described above, immediately contact your SUBARU dealer for an inspection.

– CONTINUED –

■ SRS airbag system warning light

⚠ WARNING

If the warning light exhibits any of the following conditions, there may be a malfunction in the seatbelt pretensioners and/or SRS airbag system.

- **Flashing or flickering of the warning light**
- **No illumination of the warning light when the ignition switch is first turned to the "ON" position**
- **Continuous illumination of the warning light**
- **Illumination of the warning light while driving**

Immediately take your vehicle to your nearest SUBARU dealer to have the system checked. Unless checked and properly repaired, the seatbelt pretensioners and/or SRS airbags will operate improperly (e.g. SRS airbags may inflate in a very minor collision or not inflate in a severe collision), which may increase the risk of injury.

For details about the components monitored by the warning light, refer to "SRS airbag system monitors" ☞1-68.

■ Front passenger's frontal airbag ON and OFF indicators

NOTE

For details about the operating conditions of SRS seat cushion airbag, refer to "SRS seat cushion airbag operation" ☞1-61.

ON / : Front passenger's frontal airbag ON indicator

OFF / : Front passenger's frontal airbag OFF indicator

The front passenger's frontal airbag ON and OFF indicators show you the status of the front passenger's SRS frontal airbag.

The indicators are located as shown in the illustration.

When the ignition switch is turned to the "ON" position, both the ON and OFF indicators illuminate for 6 seconds during which time the system is checked. Following the system check, both indicators turn off for 2 seconds. After that, one of the indicators illuminates depending on the status of the front passenger's SRS frontal airbag determined by the SUBARU advanced frontal airbag system monitoring.

If the front passenger's SRS frontal airbag is activated, the passenger's frontal airbag ON indicator will illuminate while the OFF indicator will remain off.

If the front passenger's SRS frontal airbag is deactivated, the passenger's frontal airbag ON indicator will remain off while the OFF indicator will illuminate.

With the ignition switch turned to the "ON" position, if both the ON and OFF indicators remain illuminated or off simultaneously even after the system check period, the system is malfunctioning. Contact your SUBARU dealer immediately for an inspection.

■ CHECK ENGINE warning light/Malfunction indicator light

⚠ CAUTION

If the CHECK ENGINE warning light/malfunction indicator light illuminates while you are driving, have your vehicle checked/repaired by your SUBARU dealer as soon as possible. Continued vehicle operation without having the emission control system checked and repaired as necessary could cause serious damage, which may not be covered by your vehicle's warranty.

If this light illuminates steadily or blinks while the engine is running, it may indicate that there is at least one problem or potential problem somewhere in the emission control system.

▼ If the light illuminates constantly

If the light illuminates constantly while driving or does not turn off after the engine starts, an emission control system malfunction has been detected.

You should have your vehicle checked by an authorized SUBARU dealer immediately.

NOTE

This light also illuminates when the fuel filler cap is not tightened until it clicks.

If you have recently refueled your vehicle, the cause of the CHECK ENGINE warning light/malfunction indicator light coming on could be a loose or missing fuel filler cap. Remove the cap and retighten it until it clicks. Make sure nothing is interfering with the sealing of the cap. Tightening the cap will not make the CHECK ENGINE warning light/malfunction indicator light turn off immediately. It may take several driving trips. If the light does not turn off, take your vehicle to your authorized SUBARU dealer immediately.

▼ If the light is blinking

If the light is blinking while driving, an engine misfire condition has been detected which may damage the emission control system.

To prevent serious damage to the emission control system, you should conform to the following instructions.

- Reduce vehicle speed.
- Avoid hard acceleration.
- Avoid steep uphill grades.
- Reduce the amount of cargo, if possible.
- Stop towing a trailer as soon as possible (Outback).

The CHECK ENGINE warning light/malfunction indicator light may stop blinking and illuminate steadily after several driving trips. You should have your vehicle checked by an authorized SUBARU dealer immediately.

■ Charge warning light

If this light illuminates when the engine is running, it may indicate that the charging system is not working properly.

If the light illuminates while driving or does not turn off after the engine starts, stop the engine at the first safe opportunity and check the alternator belt. If the belt is loose, broken or if the belt is in good condition but the light remains illuminated, contact your nearest SUBARU dealer immediately.

■ Oil pressure warning light

⚠ CAUTION

Do not operate the engine with the oil pressure warning light on. This may cause serious engine damage.

If this light illuminates when the engine is running, it may indicate that the engine oil pressure is low and the lubricating system

– CONTINUED –

is not working properly.

If the light illuminates while driving or does not turn off after the engine starts, stop the engine at the first safe opportunity and check the engine oil level. If the oil level is low, add oil immediately. If the engine oil is at the proper level but the light remains illuminated, contact your nearest SUBARU dealer immediately.

■ Engine low oil level warning indicator

This indicator appears when the engine oil level decreases to the lower limit.

If the engine low oil level warning indicator appears while driving, park the vehicle at a safe and level location, and then check the engine oil level. When the engine oil level is not within the normal range, refill with engine oil. Refer to “Engine oil” ☞11-11.

If the warning indicator does not disappear after refilling with engine oil or the warning indicator appears even though the engine oil level is within the normal range, have the system checked by a SUBARU dealer.

NOTE

- **After replacing or adding the engine oil, if the engine oil level is within the normal range when restarting the engine on a level surface, the warning indicator will be off.**
- **The warning indicator may appear temporarily in the following conditions because a low oil level may be detected as a result of significant oil movement in the engine.**
  - **– when the vehicle is considerably inclined on an uphill or steep slope**
  - **– when the vehicle has continuously accelerated and decelerated**
  - **– when the vehicle is continuously turned**
  - **– when the vehicle is driven on a road that alternates continuously between uphill and downhill**

■ AT OIL TEMP warning light

AT OIL TEMP

If this light illuminates when the engine is running, it may indicate that the transmission fluid temperature is too hot.

If the light illuminates while driving, immediately stop the vehicle in a safe place and let the engine idle until the warning light turns off.

▼ Transmission control system warning

If the “AT OIL TEMP” warning light flashes after the engine has started, it may indicate that the transmission control system is not working properly. Contact your nearest SUBARU dealer for service immediately.

■ Low tire pressure warning light (U.S. spec. models)

When the ignition switch is turned to the “ON” position, the low tire pressure warning light will illuminate for approximately 2 seconds to check that the tire pressure monitoring system (TPMS) is functioning properly. If there is no problem and all tires are properly inflated, the light will go out.

Each tire, including the spare (if provided), should be checked monthly when cold and inflated to the inflation pressure recommended by the vehicle manufacturer on the vehicle placard or tire inflation pressure label. (If your vehicle has tires of a different size than the size indicated on the vehicle placard or tire inflation pressure label, you should determine the proper tire inflation pressure for those tires.)

As an added safety feature, your vehicle has been equipped with a tire pressure monitoring system (TPMS) that illuminates a low tire pressure telltale when one or more of your tires is significantly underinflated. Accordingly, when the low tire pressure telltale illuminates, you should stop and check your tires as soon as

possible, and inflate them to the proper pressure. Driving on a significantly under-inflated tire causes the tire to overheat and can lead to tire failure. Under-inflation also reduces fuel efficiency and tire tread life, and may affect the vehicle's handling and stopping ability.

Please note that the TPMS is not a substitute for proper tire maintenance, and it is the driver's responsibility to maintain correct tire pressure, even if under-inflation has not reached the level to trigger illumination of the TPMS low tire pressure telltale.

Your vehicle has also been equipped with a TPMS malfunction indicator to indicate when the system is not operating properly. The TPMS malfunction indicator is combined with the low tire pressure telltale. When the system detects a malfunction, the telltale will flash for approximately one minute and then remain continuously illuminated. This sequence will continue upon subsequent vehicle start-ups as long as the malfunction exists. When the malfunction indicator is illuminated, the system may not be able to detect or signal low tire pressure as intended. TPMS malfunctions may occur for a variety of reasons, including the installation of replacement or alternate tires or wheels on the vehicle that prevent the TPMS from functioning properly. Always check the TPMS malfunction telltale after replacing one or more tires or wheels on your vehicle to ensure that the replacement or alternate tires and wheels allow the TPMS to continue to function properly.

Should the warning light illuminate steadily after blinking for approximately one minute, have the system inspected by your nearest SUBARU dealer as soon as possible.

WARNING

If this light does not illuminate briefly after the ignition switch is turned ON or the light illuminates steadily after blinking for approximately one minute, you should have your Tire Pressure Monitoring System checked at a SUBARU dealer as soon as possible.

If this light illuminates while driving, never brake suddenly. Instead, perform the following procedure. Otherwise an accident involving serious vehicle damage and serious personal injury could occur.

1) **Keep driving straight ahead while gradually reducing speed.**
2) **Slowly pull off the road to a safe place.**

If this light still illuminates while driving after adjusting the tire pressure, a tire may have significant damage and a fast leak that causes the tire to lose air rapidly. If you have a flat tire, replace it with a spare tire as soon as possible.

When a spare tire is mounted or a wheel rim is replaced without the original pressure sensor/transmitter being transferred, the Low tire pressure warning light will illuminate steadily after blinking for approximately one minute. This indicates the TPMS is unable to monitor all four road wheels. Contact your SUBARU dealer as soon as possible for tire and sensor replacement and/or system resetting. If the light illuminates steadily after blinking for approximately one minute, promptly contact a SUBARU dealer to have the system inspected.

CAUTION

The tire pressure monitoring system is NOT a substitute for manually checking tire pressure. The tire pressure should be checked periodically (at least monthly) using a tire gauge. After any change to tire

– CONTINUED –

pressure(s), the tire pressure monitoring system will not re-check tire inflation pressures until the vehicle is first driven more than 20 mph (32 km/h). After adjusting the tire pressures, increase the vehicle speed to at least 20 mph (32 km/h) to start the TPMS re-checking of the tire inflation pressures. If the tire pressures are now above the severe low pressure threshold, the low tire pressure warning light should turn off a few minutes later. Therefore, be sure to install the specified size for the front and rear tires.

■ ABS warning light ABS / (ABS)

⚠ CAUTION

- **If any of the following conditions occur, we recommend that you have the ABS repaired at the first available opportunity by your SUBARU dealer.**
  - **The warning light does not illuminate when the ignition switch is turned to the "ON" position.**
  - **The warning light illuminates when the ignition switch is turned to the "ON" position, but it does not turn off even after starting the vehicle.**
  - **The warning light illuminates during driving.**
- **When the warning light is on (and brake system warning light is off), the ABS function shuts down; however, the conventional brake system continues to operate normally.**

The ABS warning light illuminates together with the brake system warning light if the EBD system malfunctions. For further details of the EBD system malfunction warning, refer to "Brake system warning light" ☞3-18.

NOTE

If the warning light behavior is as described in the following conditions, the ABS may be considered normal.

- **The warning light illuminates right after the engine is started but turns off immediately, remaining off.**
- **The warning light remains illuminated after the engine has been started, but it turns off while driving.**
- **The warning light illuminates during driving, but it turns off immediately and remains off.**

When driving with an insufficient battery voltage such as when the engine is jump started, the ABS warning light may illuminate. This is due to the low battery voltage and does not indicate a malfunction. When the battery becomes fully charged, the light will turn off.

■ Brake system warning light BRAKE / (!)

⚠ WARNING

- **Driving with the brake system warning light on is dangerous. This indicates your brake system may not be working properly. If the light remains illuminated, have the brakes inspected by a SUBARU dealer immediately.**
- **If at all in doubt about whether the brakes are operating properly, do not drive the vehicle. Have your vehicle towed to the nearest SUBARU dealer for repair.**
- **If the brake system warning light illuminates, the electronic parking brake system may be malfunctioning. Immediately stop your vehicle in a safe location, use tire stops under the tires to prevent the vehicle from moving**

and contact your SUBARU dealer. For details, refer to "Electronic parking brake" ☞7-40.

NOTE

- **Even if the brake system warning light illuminates, if the warning light behavior is as described in the following examples, the electronic parking brake system is not malfunctioning.**
  - **The warning light turns off when the electronic parking brake is applied or released.**
  - **The warning light turns off when the ignition switch is turned to the "ON" position again.**
- **The brake system warning light may illuminate immediately after the engine is started. However, it is not malfunctioning if the warning light turns off after the electronic parking brake is released.**
- **The brake system warning light may illuminate after the electronic parking brake is frequently applied and released. However, the electronic parking brake system is not malfunctioning if the light turns off after a short period of time.**
- **When the engine is started while the electronic parking brake is applied/released, the system may judge an abnormal situation and the warning light may illuminate. If the warning light illuminates, turn the ignition switch once to the "LOCK"/"OFF" position and then restart the engine. Then, apply/release the electronic parking brake. If the warning light turns off, the system will be restored.**

This light has the following functions.

▼ Brake fluid level warning

This light illuminates when the brake fluid level has dropped to near the "MIN" level of the brake fluid reservoir with the ignition switch in the "ON" position and with the parking brake fully released.

If the brake system warning light should illuminate while driving (with the parking brake fully released and with the ignition switch positioned in "ON"), it could be an indication of leaking of brake fluid or worn brake pads. If this occurs, immediately stop the vehicle at the nearest safe place and check the brake fluid level. If the fluid level is below the "MIN" mark in the reservoir, do not drive the vehicle. Have the vehicle towed to the nearest SUBARU dealer for repair.

▼ Electronic Brake Force Distribution (EBD) system warning

The brake system warning light also illuminates if a malfunction occurs in the EBD system. In that event, it illuminates together with the ABS warning light.

The EBD system may be malfunctioning if the brake system warning light and ABS warning light illuminate simultaneously during driving.

Even if the EBD system fails, the conventional braking system will still function. However, the rear wheels will be more prone to locking when the brakes are applied harder than usual and the vehicle's motion may therefore become somewhat harder to control.

If the brake system warning light and ABS warning light illuminate simultaneously, take the following steps.

1. Stop the vehicle in the nearest safe, flat place.
2. Shut down the engine, apply the parking brake and then restart it.
3. Release the parking brake. If both warning lights turn off, the EBD system may be malfunctioning. Drive carefully to the nearest SUBARU dealer and have the system inspected.
4. If both warning lights illuminate again

– CONTINUED –

and remain illuminated after the engine has been restarted, shut down the engine again, apply the parking brake, and check the brake fluid level.

5. If the brake fluid level is not below the "MIN" mark, the EBD system may be malfunctioning. Drive carefully to the nearest SUBARU dealer and have the system inspected.

6. If the brake fluid level is below the "MIN" mark, DO NOT drive the vehicle. Instead, have the vehicle towed to the nearest SUBARU dealer for repair.

▼ Electronic parking brake system warning

The brake system warning light illuminates when the electronic parking brake system is malfunctioning. If the warning light illuminates, promptly park in a safe location as soon as possible and contact your SUBARU dealer.

The brake system warning light remains illuminated when the parking brake cannot be released even if the parking brake switch is pushed. For details, refer to "Electronic parking brake" ☞7-40.

▽ Frequent operation warning

The brake system warning light illuminates and a chirp sound will be heard if the parking brake switch is operated too frequently. In this case, the operation of the parking brake switch is restricted to protect the electronic parking brake system.

■ Electronic parking brake indicator light PARK / Ⓟ

▼ Parking brake indicator

The light illuminates with the parking brake applied while the ignition switch is in the "ON" position. It turns off when the parking brake is fully released.

▼ Electronic parking brake system warning

⚠ WARNING

- **When you release the electronic parking brake while the engine is running, the electronic parking brake indicator light will turn off. However, if the light still illuminates, stop the vehicle in a safe location immediately and have the system inspected by a SUBARU dealer.**
- **If at all in doubt about whether the brakes are operating properly, do not drive the vehicle. Have your vehicle towed to the nearest SUBARU dealer for repair.**
- **If the electronic parking brake indicator light flashes, the electronic parking brake system may be malfunctioning. Immediately stop your vehicle in a safe location, use tire stops under the tires to prevent the vehicle from moving and contact your SUBARU dealer. For details, refer to "Electronic parking brake" ☞7-40.**

NOTE

- **When the ignition switch is turned to the "LOCK"/"OFF" position with the electronic parking brake applied, the electronic parking brake indicator light remains illuminated for approximately 30 seconds and then turns off.**
- **When the electronic parking brake switch is pulled to apply the electronic parking brake while the ignition switch is in the "LOCK"/"OFF" position, the electronic parking brake indicator light illuminates, remains illuminated for approximately 30 seconds and then turns off.**
- **Even if the electronic parking brake indicator light flashes, if the warning light behavior is as described in the following examples, the electronic parking brake system is not malfunctioning.**

– The indicator light turns off when the electronic parking brake is released.

- **The electronic parking brake indicator light may flash immediately after the engine is started. However, it is not malfunctioning if the indicator light turns off after the electronic parking brake is released.**
- **The electronic parking brake indicator light may flash after the electronic parking brake is frequently applied and released. However, the electronic parking brake system is not malfunctioning if the light turns off after a short period of time.**

The electronic parking brake indicator light flashes when the electronic parking brake system is malfunctioning. If the indicator light flashes, promptly park in a safe location as soon as possible and contact your SUBARU dealer.

The electronic parking brake indicator light remains illuminated when the parking brake cannot be released even if the parking brake switch is pushed. For details, refer to “Electronic parking brake” ☞7-40.

▽ Parking brake apply inhibit warning

The electronic parking brake indicator light flashes for 10 seconds and a chirp sound will be heard if the parking brake switch is operated when the parking brake cannot be applied.

▽ Frequent operation warning

The electronic parking brake indicator light flashes for 10 seconds and a chirp sound will be heard if the parking brake switch is operated too frequently. In this case, the operation of the parking brake switch is restricted to protect the electronic parking brake system.

NOTE

Wait until the indicator light turns off.

■ Hill Holder indicator light

⚠ WARNING

If the Hill Holder indicator light does not illuminate even when the Hill Holder switch is pressed to activate the Hill Holder function, the electronic parking brake system may be malfunctioning. Immediately stop the vehicle in a safe location and contact your SUBARU dealer.

The light illuminates when the Hill Holder switch is pressed to activate the Hill Holder function. For details about the Hill Holder function, “Hill Holder function” ☞7-43.

■ Low fuel warning light

The low fuel warning light illuminates when the tank is nearly empty approximately 2.6 US gal (10.0 liters, or 2.2 Imp gal). It only operates when the ignition switch is in the “ON” position.

⚠ CAUTION

Promptly put fuel in the tank whenever the low fuel warning light illuminates. Engine misfires as a result of an empty tank could cause damage to the engine.

■ Door open indicator

When any of the doors, the rear gate (Outback) or the trunk lid (Legacy) is not fully closed, the door open indicator appears. This function is effective even if the ignition switch is in the “LOCK”/“OFF” or “ACC” position (all models) or the key is removed from the ignition switch (models without “keyless access with push-button start system”).

The open door is indicated by the corresponding part of the door open indicator.

– CONTINUED –

Always make sure this indicator does not appear before you start to drive.

■ Windshield washer fluid warning indicator

This indicator appears when the fluid level in the windshield washer fluid tank decreases to the lower limit (approximately 0.6 US qt, 0.6 liter, 0.5 Imp qt).

■ All-Wheel Drive warning light AWD

⚠ WARNING

Continued driving with the AWD warning light flashing can lead to powertrain damage. If the AWD warning light flashes, promptly park in a safe location and then check whether all four tires are the same diameter and whether any of the tires has a puncture or has lost air pressure for some other reason.

NOTE

If the temporary spare tire is used, the AWD warning light may flash. Use of the temporary spare tire should therefore be restricted to the minimum time necessary. Replace the temporary spare tire with a conventional tire as soon as possible.

This light flashes if the vehicle is driven with tires of different diameters fitted on its wheels or with the air pressure excessively low in any of its tires.

■ Power steering warning light

While the engine is running, this warning light illuminates when a malfunction has been detected in the electric power steering system.

⚠ CAUTION

When the power steering warning light is illuminated, there may be more resistance when the steering wheel is operated. Drive carefully to the nearest SUBARU dealer and have the vehicle inspected immediately.

NOTE

If the steering wheel is operated in the following ways, the power steering control system may temporarily limit the power assist in order to prevent the system components, such as the control computer and drive motor, from overheating.

- **The steering wheel is operated frequently and turned sharply while the vehicle is maneuvered at extremely low speeds, such as while frequently turning the steering wheel during parallel parking.**

• The steering wheel remains in the fully turned position for a long period of time.

At this time, there will be more resistance when steering. However this is not a malfunction. Normal steering force will be restored after the steering wheel is not operated for a while and the power steering control system has an opportunity to cool down. However, if the power steering is operated in a non-standard way which causes power assist limitation to occur too frequently, that may result in a malfunction of the power steering control system.

■ Vehicle Dynamics Control warning light/Vehicle Dynamics Control operation indicator light

▼ Vehicle Dynamics Control warning light

⚠ CAUTION

The Vehicle Dynamics Control system provides its ABS control through the electrical circuit of the ABS. Accordingly, if the ABS is inoperative, the Vehicle Dynamics Control system becomes unable to provide ABS control. As a result, the Vehicle Dynamics Control system becomes inoperative, causing the warning light to illuminate. Although both the Vehicle Dynamics Control and ABS are inoperative in this case, the ordinary functions of the brake system are still available. You will be safe while driving in this condition, but drive carefully and have your vehicle checked at a SUBARU dealer as soon as possible.

NOTE

• If the electrical circuit of the Vehicle Dynamics Control system itself malfunctions, the warning light only illuminates. At this time, the ABS (Anti-lock Brake System) remains fully operational.

• The warning light illuminates when the electronic control system of the ABS/Vehicle Dynamics Control system malfunctions.

The Vehicle Dynamics Control system is probably inoperative under any of the following conditions. Have your vehicle checked at a SUBARU dealer immediately.

- The warning light does not illuminate when the ignition switch is turned to the “ON” position.
- The warning light illuminates while the vehicle is running.

NOTE

If the warning light behavior is as described in the following examples, the Vehicle Dynamics Control system may be considered normal.

• The warning light illuminates right after the engine is started but turns off immediately and remains off.

• The warning light illuminates after the engine has started and turns off while the vehicle is subsequently being driven.

• The warning light illuminates during driving, but turns off immediately and remains off.

▼ Vehicle Dynamics Control operation indicator light

The indicator light flashes during activation of the skid suppression function and during activation of the traction control function.

– CONTINUED –

NOTE

- **The light may remain illuminated for a short period of time after the engine has been started, especially in cold weather. This does not indicate the existence of a problem. The light should turn off as soon as the engine has warmed up.**
- **The indicator light illuminates when the engine has developed a problem and the CHECK ENGINE warning light/ malfunction indicator light is on.**

The Vehicle Dynamics Control system is probably malfunctioning under the following condition. Have your vehicle checked at a SUBARU dealer as soon as possible.

- The light does not turn off even after the lapse of several minutes (the engine has warmed up) after the engine has started.

■ Vehicle Dynamics Control OFF indicator light

The light illuminates when the Vehicle Dynamics Control OFF switch is pressed to deactivate the Vehicle Dynamics Control system.

The Vehicle Dynamics Control system is probably malfunctioning under any of the following conditions. Have your vehicle checked at a SUBARU dealer immediately.

- The light does not illuminate when the ignition switch is turned to the “ON” position.
- The light does not turn off even after a period of approximately 2 seconds after the ignition switch has been turned to the “ON” position.

■ Warning chimes and warning indicator of the keyless access with push-button start system (if equipped)

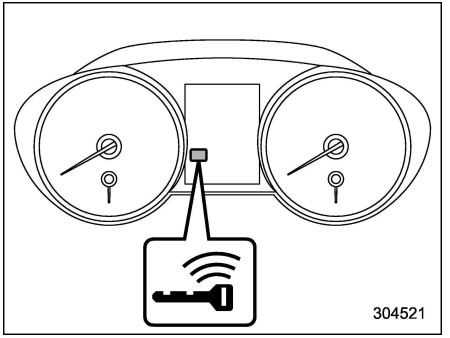

Access key warning indicator

The keyless access with push-button start system is equipped with a warning chime and the access key warning indicator in order to minimize improper operations and help protect your vehicle from theft.

When the warning chime sounds and/or the warning indicator appears, take the appropriate action.

You cannot turn the warning chimes off. However, the volume setting of the outside warning chime can be changed by a SUBARU dealer. Consult your SUBARU dealer for details.

WARNING

Never drive the vehicle if the indicator on the push-button ignition switch is flashing in green when starting the engine. This indicates the status that the steering wheel is not released and could result in an accident involving serious injury or death.

CAUTION

- **When starting the engine again after the operation indicator on the push-button ignition switch flashes in green, if the operation indicator is still flashing in green, there could be a steering lock malfunction. Contact your SUBARU dealer as soon as possible.**

- When the operation indicator on the push-button ignition switch flashes in orange, contact a SUBARU dealer immediately.

NOTE

- Even when the access key fob is within the operating ranges inside the vehicle, the access key warning for engine start may be provided depending on the status of the access key fob and the environmental conditions.
- When the access key fob is taken out of the vehicle through an open window, the access key takeout warning or passenger access key takeout warning will not be provided.

▼ List of warnings

CAUTION

When any of the following warnings occurs even if the access key warning indicator does not appear, take the appropriate action.

– CONTINUED –

Inside warning chime	Outside warning chime	Operation indicator on push-button ignition switch	Status	Action
Ding, ding ... (intermittent)	—	—	The driver's door is opened while the push-button ignition switch is "ACC" and the select lever is in the "P" position.	Switch the push-button ignition switch to "OFF", or close the driver's door. *When exiting the vehicle, be sure to switch the push-button ignition switch to "OFF".
			The push-button ignition switch is switched to "OFF" while the driver's door is open.	Close the driver's door.
Ding	Short beep (2 seconds)	—	**Lockout warning:** An attempt is made to lock all doors while the access key fob is left inside the vehicle.	Take out the access key fob from the vehicle, and lock the doors. *The doors cannot be locked while the access key fob is inside the vehicle. *A chirp sound will be heard, and all doors will be unlocked.
—	Short beep (2 seconds)	—	**Access key lock-in warning:** The door lock sensor is touched while the push-button ignition switch is "OFF" and the access key fob is inside the vehicle.	Take out the access key fob from the vehicle, and lock the doors. *If the access key fob is inside the vehicle, the doors cannot be locked.
—	Beep, beep, beep, beep, beep (5 times)	—	**Door ajar warning:** The door lock sensor is touched while the ignition switch is in the "OFF" position and one of the doors including the rear gate is opened.	Close the doors securely and lock them. *If one of the doors including the rear gate is opened, the doors cannot be locked.
Ding	Long beep (60 seconds max.)	—	**Power warning:** The door lock sensor is touched while you are carrying the access key fob, the push-button ignition switch is in a position other than "OFF" and the select lever is in the "P" position.	Return the access key fob inside the vehicle, or switch the push-button ignition switch to "OFF". *If the push-button ignition switch is not switched to "OFF", the doors cannot be locked.
Ding, ding ... (7 seconds)	—	—	**Access key warning:** The vehicle is driven while the access key fob is not inside the vehicle.	Carry the access key fob, and drive the vehicle.

Inside warning chime	Outside warning chime	Operation indicator on push-button ignition switch	Status	Action
Ding	—	—	**Access key warning for engine start:** The push-button ignition switch is pressed while the access key fob is not inside the vehicle.	Carry the access key fob, and press the push-button ignition switch.
Ding	Beep, beep, beep (3 times)	—	**Access key takeout warning:** The driver exits the vehicle with the access key fob and closes the driver's door while the push-button ignition switch is in a position other than "OFF" and the select lever is in the "P" position.	Switch the push-button ignition switch to "OFF", and get out of the vehicle.
Ding	Beep, beep, beep (3 times)	—	**Passenger access key takeout warning:** A fellow passenger exits the vehicle with the access key fob and closes a door other than the driver's door while the push-button ignition switch is in a position other than "OFF".	Return the access key fob to inside the vehicle, or switch the push-button ignition switch to "OFF".
Long beep (continuous)	Long beep (continuous)	—	**Access key takeout without "P" position warning:** The driver exits the vehicle with the access key fob and closes the driver's door while the push-button ignition switch is in a position other than "OFF" and the select lever is in a position other than the "P" position.	Shift the select lever to the "P" position, switch the push-button ignition switch to "OFF" and exit the vehicle.
Long beep (continuous)	—	—	**Select lever position warning:** ● Case 1: The engine is turned off by pressing the push-button ignition switch while the select lever is in a position other than the "P" position. ● Case 2: The driver's door is opened while the push-button ignition switch is in a position other than "OFF" and the select lever is in a position other than the "P" position.	● Case 1: Start the engine, shift the select lever to the "P" position, switch the push-button ignition switch to "OFF" and exit the vehicle. ● Case 2: Shift the select lever to the "P" position, switch the push-button ignition switch to "OFF" and exit the vehicle.

– CONTINUED –

Inside warning chime	Outside warning chime	Operation indicator on push-button ignition switch	Status	Action
Ding	—	—	The battery of the access key fob is low.	Replace the battery of the access key.
Ding	—	Flashes in green (15 seconds max.)	**Steering lock warning:** The engine start procedure is performed, but the steering is still locked.	While turning the steering wheel right and left lightly, depress the brake pedal and press the push-button ignition switch.
Ding	—	Flashes in orange	**System malfunction warning:** A malfunction is detected in the power system or steering lock.	Contact a SUBARU dealer immediately and have the vehicle inspected.

■ Security indicator light

This indicator light shows the status of the alarm system. It also indicates operation of the immobilizer system.

▼ Alarm system

It blinks to show the driver the operational status of the alarm system. For detailed information, refer to “Alarm system” ☞2-29.

▼ Immobilizer system

The security indicator light starts blinking in the following conditions.

For models with “keyless access with push-button start system”:

- Immediately after the push-button ignition switch is turned to the “OFF” position.
- Immediately after the driver’s door is opened or closed when all of the following conditions are met.
  - The push-button ignition switch is in the “ON” or “ACC” position.
  - The access key fob is outside the vehicle.
  - The engine is not running.
  - In the event that an unauthorized key is used (for example, the key is unregistered or the ID code does not match), the power is not switched to “ON” and the security indicator light continues blinking.

For models without “keyless access with push-button start system”:

- Approximately 60 seconds after the ignition switch is turned from the “ON” position to the “ACC” or “LOCK” position.
- Immediately after the key is pulled out.

If the indicator light does not blink in the above conditions, it may indicate that immobilizer system may be malfunctioning. Contact your nearest SUBARU dealer immediately.

In the event that an unauthorized key (for example, an unauthorized duplicate) is used, the security indicator light illuminates. For details about the immobilizer system, refer to “Immobilizer” ☞2-4.

NOTE

- **The security indicator light remains off in the following conditions. It means that the matching of the ID code is completed and the immobilizer system is deactivated, and it does not indicate a malfunction.**

  Models with “keyless access with push-button start system”:
  - **while the engine is running**
  - **the push-button ignition switch has been turned to the “ON” or “ACC” position and the driver’s door has not been opened or closed**

  Models without “keyless access with push-button start system”:
  - **while the engine is running**
  - **for approximately 60 seconds after the ignition switch is turned from the “ON” position to the “ACC” or “LOCK” position**
  - **when the ignition switch is in the “ON” position.**

- **Even if a malfunction occurs, such as the security indicator light flashes irregularly, it will not affect the functionality of the immobilizer system.**

– CONTINUED –

■ Select lever/gear position indicator

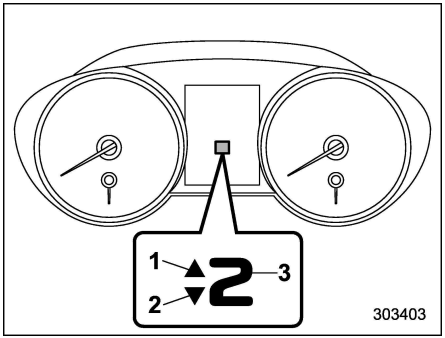

1) Upshift indicator
2) Downshift indicator
3) Select lever/gear position indicator

The select lever position is displayed on the indicator.

▼ Upshift/downshift indicator

When the manual mode is selected, the gear position indicator (which shows the current gear selection) and the upshift/downshift indicator light up. Refer to "Selection of manual mode" ☞7-27.

■ Turn signal indicator lights

These lights show the operation of the turn signal or lane change signal.

If the indicator lights do not blink or blink rapidly, the turn signal bulb may be burned out. Replace the bulb as soon as possible. Refer to "Replacing bulbs" ☞11-38.

■ High beam indicator light

This light shows that the headlights are in the high beam mode.

This indicator light also illuminates when operating the headlight flasher.

■ High beam assist indicator (green) (if equipped)

This indicator appears when the high beam assist function is activated. For details about the high beam assist function, refer to "High beam assist function" ☞3-48.

■ High beam assist warning indicator (yellow) (if equipped)

This warning indicator appears when the high beam assist function malfunctions. When this warning indicator appears, have your vehicle inspected by your SUBARU dealer.

■ Cruise control indicator

This indicator appears when the cruise control main button is pressed to activate the cruise control function. For details, refer to "To set cruise control" ☞7-46.

If this light blinks, do not use the cruise control. In addition, if it blinks frequently, contact your SUBARU dealer for an inspection.

⚠ CAUTION

If the CHECK ENGINE warning light/malfunction indicator light illuminates, the cruise control indicator flashes at the same time. At this time, do not drive at high speed and have your vehicle inspected at a SUBARU dealer as soon as possible.

■ Cruise control set indicator

This indicator appears when vehicle speed has been set to use the cruise control function.

■ Automatic headlight beam leveler warning light (models with LED headlights)

This light illuminates when the automatic headlight beam leveler does not operate normally.

If this light illuminates while driving or does not turn off approximately 3 seconds after turning the ignition switch to the “ON” position, have your vehicle inspected at your SUBARU dealer.

■ LED headlight warning light (models with LED headlights)

This light illuminates if the LED headlights malfunction. Have your vehicle inspected at a SUBARU dealer as soon as possible.

■ Steering Responsive Headlight warning light/ Steering Responsive Headlight OFF indicator light (if equipped)

This light illuminates when the Steering Responsive Headlight function is off. Also, the light flashes when a malfunction occurs in the Steering Responsive Headlight. Refer to “Steering Responsive Headlight (SRH)” ☞3-54.

■ Headlight indicator light

This indicator light illuminates under the following conditions.

- when the light switch is turned to the “” or “” position
- when the light switch is in the “AUTO” position and the headlights illuminate automatically

■ Front fog light indicator light (if equipped)

This indicator light illuminates while the front fog lights are illuminated.

■ X-mode indicator (if equipped)

This indicator appears while the X-mode is activated. It will disappear when the X-mode is deactivated.

■ Hill descent control indicator (if equipped)

This indicator appears while the hill descent control function is in standby. It will flash while the hill descent control function is operating. It will disappear when the hill descent control function is not available.

■ BSD/RCTA warning indicator (if equipped)

This warning indicator appears on the multi information display when the BSD (Blind Spot Detection) or RCTA (Rear Cross Traffic Alert) is not functioning for any reason. For further details, refer to “BSD/RCTA warning indicator” ☞7-54. If this indicator remains displayed, have your vehicle inspected by your SUBARU dealer as soon as possible.

■ BSD/RCTA OFF indicator (if equipped)

This indicator appears on the multi information display when the BSD/RCTA OFF

– CONTINUED –

switch is pressed to deactivate the BSD (Blind Spot Detection) and RCTA (Rear Cross Traffic Alert). For details, refer to "BSD/RCTA OFF switch" ☞7-55.

■ Icy road surface warning indicator

When the outside temperature is 37°F (3°C) or less, the icy road surface warning indicator will illuminate to inform the driver that the road surface may be frozen.

NOTE

- **The outside temperature indicator shows the temperature in the area around the sensor. Therefore, the temperature indication may differ from the actual outside air temperature.**
- **The icy road surface warning indicator should be treated only as a guide. Be sure to check the condition of the road surface before driving.**
- **Once the icy road surface warning indicator appears, it will not disappear unless the outside temperature has increased to 41°F (5°C) or higher.**

■ RAB warning indicator (if equipped)

RAB

This indicator illuminates if the Reverse Automatic Braking System malfunctions. Refer to "Reverse Automatic Braking System" ☞7-58.

■ RAB OFF indicator (if equipped)

RAB OFF

This indicator illuminates when the Reverse Automatic Braking System is turned OFF, or when the Reverse Automatic Braking System is suspended temporarily. Refer to "Reverse Automatic Braking System" ☞7-58.

■ Sonar audible alarm OFF indicator (if equipped)

This indicator illuminates when the sonar audible alarm is turned OFF. For the setting procedure, refer to "Sonar Audible Alarm" ☞3-43.

Information display

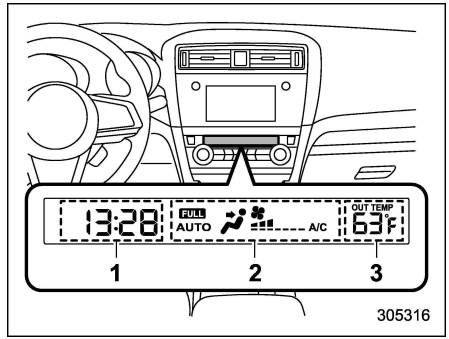

1) Clock
2) Climate control mode indicators
3) Outside temperature indicator

With the ignition switch in the "ACC" position, the clock appears on the display.

With the ignition switch in the "ON" position, the outside temperature indicator, climate control mode indicators and clock appear on the display.

■ Clock

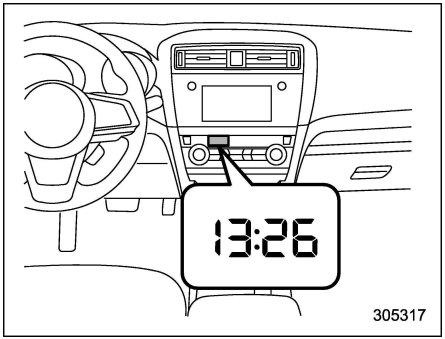

The clock shows the time while the ignition switch is in the “ACC” or “ON” position.

The clock settings can be changed by using the combination meter display. Refer to “Clock” ☞3-43.

NOTE

● For models with the genuine SUBARU navigation system, the time of the clock is automatically adjusted by the GPS (Global Positioning System). This feature can be turned on or off using the navigation system.

● Depending on the model of smartphone, the settings of the connected smartphone, the phone settings may need to be changed in order to interact properly with the vehicle. (ex: For iOS or other models, notification settings may need to be activated.)

■ Climate control mode indicators

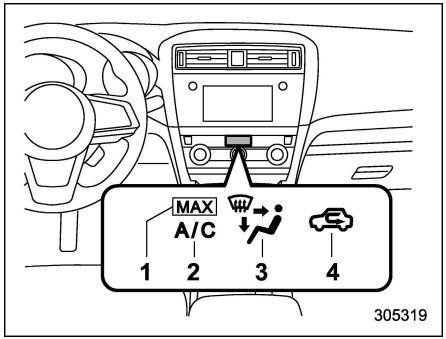

Models with manual climate control system

1) Maximum air conditioner ON indicator
2) Air conditioner ON indicator
3) Airflow mode indicator
4) Air inlet selection ON indicator

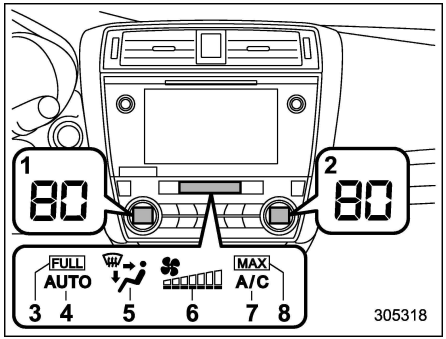

Models with automatic climate control system

1) Set temperature indicator (driver’s side)
2) Set temperature indicator (front passenger’s side)
3) FULL AUTO indicator
4) Auto indicator
5) Airflow mode indicator
6) Fan speed indicator
7) Air conditioner ON indicator
8) Maximum air conditioner ON indicator

– CONTINUED –

■ Outside temperature indicator

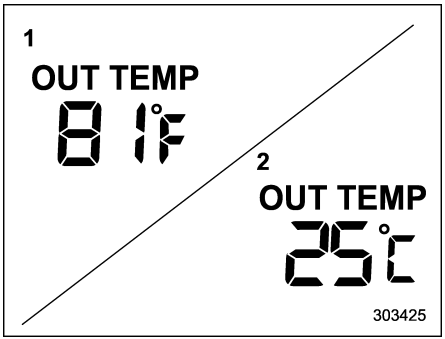

1) U.S. spec. models
2) Except U.S. spec. models

The outside temperature indicator shows the outside temperature in a range from −22 to 122°F (−30 to 50°C).

The indicator can give a false reading under any of the following conditions:

- When there is too much sun.
- During idling; while running at low speeds in a traffic jam; when the engine is restarted immediately following a shutdown.
- When the actual outside temperature falls outside the specified indicator range.

Multi information display

⚠ WARNING

Always pay adequate attention to safe driving when operating the multi information display while the vehicle is in motion. When operation of the multi information display interferes with your ability to concentrate on driving, stop the vehicle before performing operations on the screen. Also, do not concentrate on the display while driving. Doing so may cause you to look away from the road and could result in an accident.

Various information will be shown on the multi information display. Also, a warning message will appear on the display if a malfunction, etc. is detected. In addition, several settings for the displayed content can be performed.

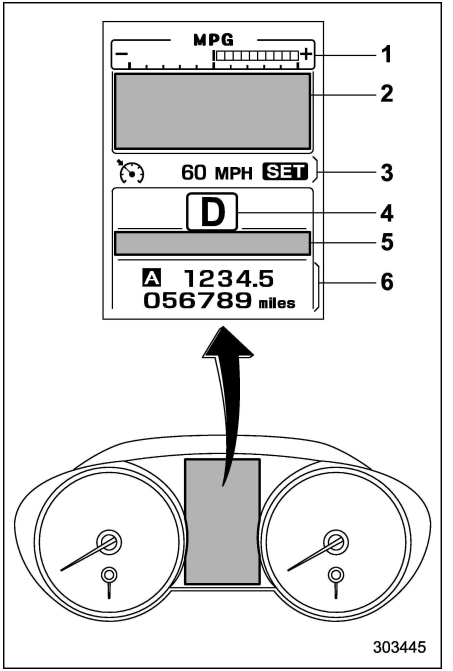

Multi information display

1) ECO gauge (refer to “ECO gauge” ☞3-11.)
2) Basic screen/Warning screen (refer to “Basic screens” ☞3-36 and “Warning screen” ☞3-36.)
3) Cruise control information display
4) Select lever/gear position indicator (refer

to “Select lever/gear position indicator” ☞3-30.)

5) Telltale screen (refer to “Telltale screen” ☞3-39.)
6) Odometer (refer to “Odometer” ☞3-8.)/ double trip meter (refer to “Double trip meter” ☞3-9.)

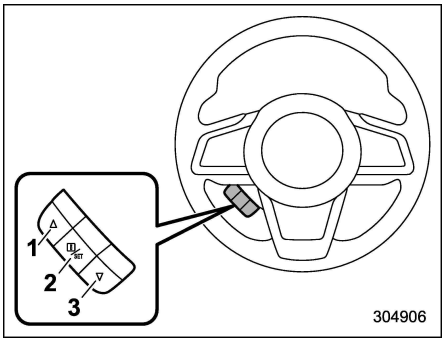

Control switch
1) Up (select)
2) Set (enter)
3) Down (select)

■ Basic operation

By operating “▲” or “▼” of the control switch, the screens and selection items can be switched. When the “i/SET” switch is pulled toward you, the item can be selected and set.

If there are some useful messages, such as vehicle information, warning information, etc., they will interrupt the current screen, and appear on the display accompanied by a beep. If such a screen is displayed, take proper action according to the message shown on the screen.

The warning screen will return to the original screen after a few seconds. While the “i” information reminder is shown on the display, it may be possible to display the warning screen again. To recall the message marked with “i” on the display, pull the “i/SET” switch on the steering wheel toward you.

■ Welcome screen and Good-bye screen

When the driver’s door is opened and closed after unlocking the door, the welcome screen will appear on the multi information display for approximately 20 seconds.

When the ignition switch is turned to the “LOCK”/“OFF” position, the multi information display gradually turns off (Good-bye screen).

NOTE

- **The basic screen will be shown when the ignition switch is turned to the “ON” position while the welcome screen is displayed.**
- **Once the welcome screen appears, it takes a certain period of time to display it again.**
- **If the ignition switch is operated after unlocking the driver’s door, the welcome screen will not appear even when the driver’s door is opened and closed.**
- **The welcome screen will disappear when you lock the driver’s door by using the remote keyless entry system (all models) or the keyless access function (if equipped) while the welcome screen is displayed.**
- **If any of the doors (including the rear gate) is opened while the welcome screen is displayed, the door ajar warning will appear.**
- **The welcome screen can be set to on or off. For details, refer to “Welcome Screen” ☞3-43.**
- **The Good-bye screen can be set to on or off. For details, refer to “Good-bye Screen” ☞3-43.**

– CONTINUED –

■ Warning screen

Example of warning

If there is a warning message or a maintenance notification, it will appear for approximately 5 seconds. Take the appropriate actions based on the messages indicated.

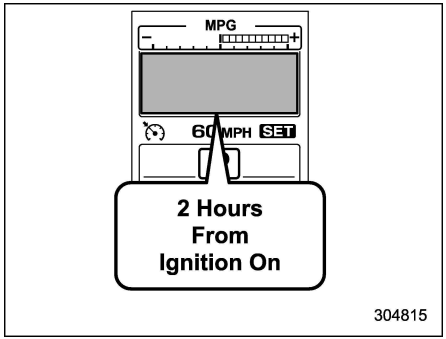

Journey time alert screen

NOTE

The journey time alert screen will appear 2 hours after the ignition switch is turned on. When you see this screen, it is recommended that you take a rest from driving.

■ Basic screens

By operating the "▲" or "▼" switch on the steering wheel, you can change the screen that is always displayed.

Default screen:

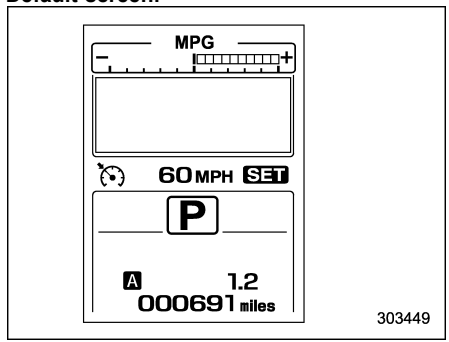

Clock and outside temperature screen:

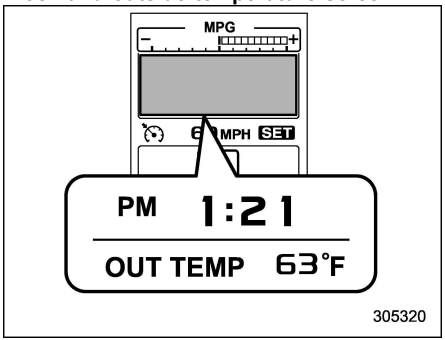

This screen displays the clock and the outside temperature.

Average fuel consumption screen:

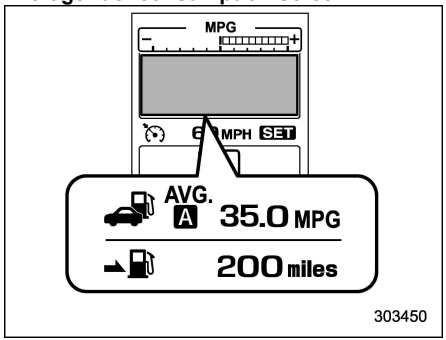

: Fuel consumption
: Driving range on remaining fuel

This screen displays the average rate of fuel consumption since the trip meter was last reset.

NOTE

The driving range on remaining fuel is only a guide. The indicated value may differ from the actual driving range on remaining fuel, so you must immediately fill the tank when the low fuel warning light illuminates.

Current fuel consumption screen:

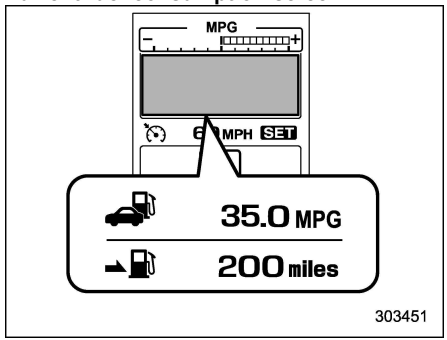

: Fuel consumption
: Driving range on remaining fuel

This screen displays the rate of fuel consumption at the present moment.

NOTE

The driving range on remaining fuel is only a guide. The indicated value may differ from the actual driving range on remaining fuel, so you must immediately fill the tank when the low fuel warning light illuminates.

– CONTINUED –

Driving information screen:

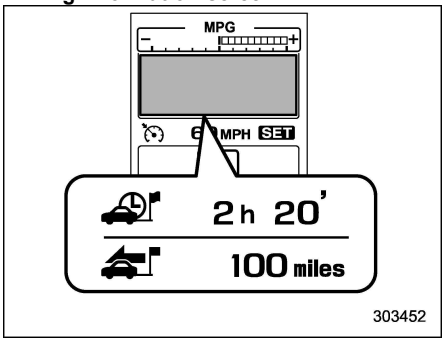

: Journey time
: Journey distance

This screen displays the journey time (the time that has elapsed since the ignition switch was turned to the “ON” position) and journey distance (the distance that has been driven since the ignition switch was turned to the “ON” position).

Digital speed screen:

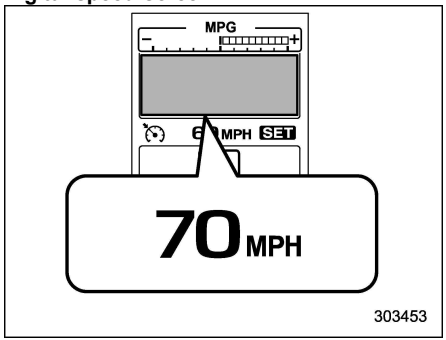

This screen displays the current vehicle speed.

TPMS screen (if equipped):

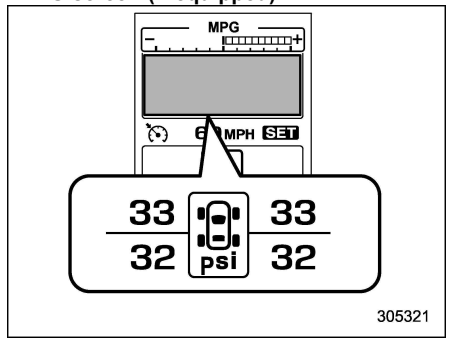

This screen displays each tire pressure.

When a tire is deflated, the deflated tire and the tire pressure will be displayed on the screen in yellow.

NOTE

The tire pressure values are displayed several minutes after driving.

Multi Media Link screen:

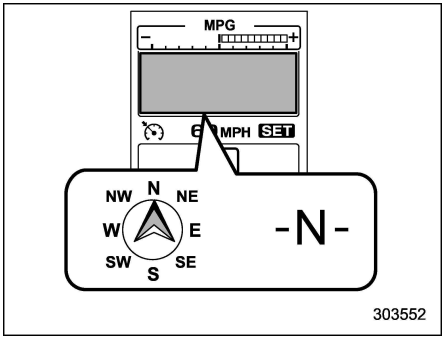

Example

This screen shows the audio, navigation, compass, and other information (if available for navigation and compass).

Menu screen entering screen:

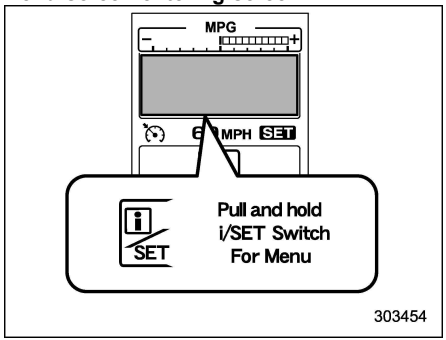

While this screen is selected, pull and hold the "i/SET" switch to enter the menu screen.

■ Telltale screen

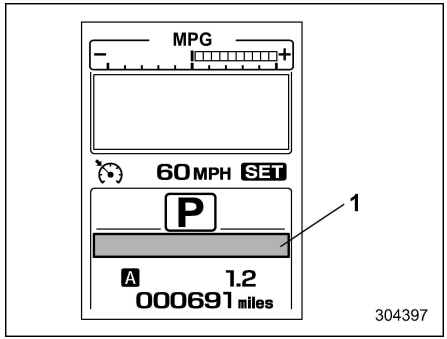

1) Telltale screen

When the corresponding situation occurs, the following telltales will be displayed on the telltale screen.

– CONTINUED –

Mark	Name	Page
	Door open indicator	3-21
	LED headlight warning indicator (if equipped)	3-31
	High beam assist indicator (green) (if equipped)	3-30
	Engine low oil level warning indicator	3-16
	BSD/RCTA warning indicator (if equipped)	3-31
OFF	BSD/RCTA OFF indicator (if equipped)	3-31
SRH OFF	Steering Responsive Headlight warning light (if equipped)	3-31
	High beam assist warning indicator (yellow) (if equipped)	3-30
	Windshield washer fluid warning indicator	3-22, 3-59, 11-30
	Hill descent control indicator (if equipped)	3-31

Mark	Name	Page
	Icy road surface warning indicator	3-32
	Access key warning indicator (if equipped)	3-24
RAB	RAB warning indicator (if equipped)	3-32
RAB OFF	RAB OFF indicator (if equipped)	3-32
P OFF	Sonar audible alarm OFF indicator (if equipped)	3-32

■ Menu screens

Pull and hold the "i/SET" switch to enter the menu screens when all of the following conditions are satisfied.

- The vehicle has been completely stopped.
- The select lever is in the "P" position.
- The menu screen entering screen is selected.

By operating the "▲" or "▼" switch on the steering wheel, you can select the menu. Pull the "i/SET" switch to enter the selected menu.

NOTE

If you enter the "Go Back" menu, the system will return to the previous screen.

The menu list is as follows.

First menu	Second menu	Third menu	Settings
Clock	Display Format	—	12-hour/24-hour
	Adjust Time (if not set automatically)	—	3-43
Screen Settings	Welcome Screen	—	● ON (with sound) ● ON (without sound) ● OFF
	Good-bye Screen	—	ON/OFF
	Gauge Initial Movement	—	ON/OFF
	Units	—	● km, km/h, Liter ● miles, MPH, Gallon
	Tire Pressure Units	—	kPa/psi
	Languages	—	● English ● Spanish ● French
SRH (if equipped)	—	—	OFF/ON
Combination Meter Illumination (if equipped)	Meter Ring Illumination	—	ON/OFF
EyeSight (models with EyeSight system)	Warning Volume	—	Max/Mid/Min
	Lead Vehicle Acquisition Sound	—	ON/OFF
	Lead Vehicle Moving Monitor Function	—	ON/OFF
	Vehicle Icon	—	ON/OFF
BSD/RCTA (if equipped)	Warning Volume	—	Max/Mid/Min
RAB (if equipped)	Warning Volume	—	Max/Mid/Min
	Sonar Audible Alarm	—	ON/OFF

– CONTINUED –

First menu	Second menu	Third menu	Settings
Vehicle Setting	Keyless Entry System	Audible Signal*1	ON/OFF
		Hazard Warning Flasher	ON/OFF
		Driver Door Unlock*1 *2	Driver Door Only, All
		Rear Gate/Trunk Unlock*1 *2 *3	Rear Gate Only, All
	Defogger	—	15 minutes/Continuous
	Interior Light	—	10 seconds – 30 seconds, OFF
	Auto Door Lock and Unlock	Auto Door Lock	Off/Vehicle Speed/Shift Into or Out of PARK
		Auto Door Unlock	Off/Shift Into or Out of PARK/Ignition OFF/Driver Door Open
	Auto Headlights	Light Sensitivity	Max/Mid/Low/Min
		Wiper Link	ON/OFF
	Welcome Lighting	Approaching Time Set	30 seconds – 90 seconds, OFF
		Leaving Time Set	30 seconds – 90 seconds, OFF
Default Settings	OK To Reset?	—	Yes/No

*1: The setting menu is available only for models with “keyless access with push-button start system”.
*2: The setting can only be changed for the “keyless access” entry function. For details, refer to “Door unlock selection function” ☞2-18.
*3: For Outback only

▼ **Clock**

This menu can be used to set the clock settings.

▽ **Display Format**

Set to 12-hour or 24-hour display.

▽ **Adjust Time (if not set automatically)**

Set the time.

▼ **Screen Settings**

After entering the “Screen Settings” menu, select one of the following menus.

▽ **Welcome Screen**

The welcome screen can be activated or deactivated. Select “On (with Sound)” to activate the screen and sound. Select “On (without Sound)” to activate the screen and deactivate the sound. Select “Off” to deactivate the screen.

▽ **Good-bye Screen**

The Good-bye screen can be activated or deactivated. Select “On” to activate the screen. Select “Off” to deactivate the screen.

▽ **Gauge Initial Movement**

The movement of the meter needles and gauge needles that occurs when the ignition switch is turned to the “ON” position can be activated or deactivated. Select “On” to activate. Select “Off” to deactivate.

▽ **Units**

You can select the displayed units of the distance, vehicle speed and volume. Operate the “▲” or “▼” switch on the steering wheel to display the preferred units. Then pull the “i/SET” switch to select the displayed units.

▽ **Tire Pressure Unit (if equipped)**

Change the units displayed in the Tire Pressure Monitoring system.

▽ **Languages**

Operate the “▲” or “▼” switch on the steering wheel to display the preferred language. Then pull the “i/SET” switch to select the displayed language.

▼ **SRH (if equipped)**

The Steering Responsive Headlight (SRH) can be set to on or off.

▼ **EyeSight (models with EyeSight system)**

NOTE

For models with the EyeSight system, refer to the Owner’s Manual supplement for the EyeSight system.

▼ **BSD/RCTA (if equipped)**

After entering the “BSD/RCTA” menu, select the “Warning Volume” menu. You can set the volume of the warning buzzer for RCTA (Rear Cross Traffic Alert). You can select “Max”, “Mid” or “Min”.

▼ **RAB (if equipped)**

After entering the “RAB” menu, select one of the following menus.

NOTE

For models with RAB (Reverse Automatic Braking) system, refer to “Reverse Automatic Braking System” ☞7-58.

▽ **Warning Volume**

The volume of the warning buzzer that sounds when the RAB (Reverse Automatic Braking) system is in operation can be set in 3 stages (“Max”, “Mid” and “Min”).

▽ **Sonar Audible Alarm**

When the RAB (Reverse Automatic Braking) system is in operation, the buzzer that sounds if an obstacle is detected in the rear or if detection is not possible can be activated or deactivated. Select “On” to activate the buzzer. Select “Off” to deactivate the buzzer.

– CONTINUED –

▼ Vehicle Setting

After entering the “Vehicle Setting” menu, select one of the following menus.

▽ Keyless Entry System

After entering the “Keyless Entry System” menu, select one of the following menus.

- **Audible Signal (models with “keyless access with push-button start system”):**

The audible signal can be activated or deactivated. Select “On” to activate. Select “Off” to deactivate.

- **Hazard Warning Flasher:**

The hazard warning flasher operation can be activated or deactivated. Select “On” to activate. Select “Off” to deactivate.

- **Driver Door Unlock (models with “keyless access with push-button start system”):**

The door unlock selection function is available for the “keyless access” entry function. For details, refer to “Door unlock selection function” ☞2-18. On this setting menu, the door unlock selection function for the driver’s door can be customized. Select “Driver Door Only” to set as “Operational”. Select “All” to set as “Non-operational”.

- **Rear Gate Unlock (Outback with “keyless access with push-button start system”):**

The door unlock selection function is available for the “keyless access” entry function. For details, refer to “Door unlock selection function” ☞2-18. On this setting menu, the door unlock selection function for the rear gate can be customized. Select “Rear Gate/Trunk Only” to set as “Operational”. Select “All” to set as “Non-operational”.

▽ Defogger

The defogger and deicer system can be set for the continuous operation mode or automatic shut-off mode. Select “Continuous” to select the continuous operation mode. Select “15 minutes” to select the automatic shut-off mode.

▽ Interior Light

The setting for the period of time in which the interior lights remain on (OFF delay timer) after closing the doors and/or the rear gate can be set or customized. Select the preferred seconds to customize the operation period. Select “Off” to deactivate the OFF delay timer.

▽ Auto Door Lock and Unlock

Setting conditions for Auto Door Lock and Unlock

- Auto Door Lock:

Set the condition of the following items to lock the door automatically.

– Vehicle Speed: When the vehicle speed reaches more than 12 mph (20 km/h).
– Shift Into or Out of PARK: When the select lever is shifted into a position other than the “P” position.
– Off: When the function is set to OFF.

- Auto Door Unlock:

Set the conditions of the following items to unlock the door automatically.

– Shift Into or Out of PARK: When the select lever is shifted into the “P” position.
– Ignition OFF: When the ignition switch is turned to OFF.
– Driver Door Open: When the driver’s door is open.
– Off: When the function is set to OFF.

▽ **Auto Headlights**

- **Light Sensitivity:**

The operational sensitivity of the auto on/off headlights can be set. You can select “Max”, “Mid”, “Low” or “Min”.

- **Wiper Link:**

The automatic headlight turn on function that is linked with the wiper operation can be activated or deactivated. Select “On” to activate. Select “Off” to deactivate.

▽ **Welcome Lighting**

After entering the “Welcome Lighting” menu, select either of the following menus.

- **Approaching Time Set:**

The setting for the period of time in which the low beam headlights remain on when approaching the vehicle can be set or customized. Select the preferred seconds to customize the operation period. Select “Off” to deactivate the welcome lighting function when approaching.

- **Leaving Time Set:**

The setting for the period of time in which the low beam headlights remain on when exiting the vehicle can be set or customized. Select the preferred seconds to customize the operation period. Select “Off” to deactivate the welcome lighting function when exiting.

▼ **Default Settings**

Select “Yes” to use the menu screen to restore customized settings to the factory default settings. Select “No” to return to the previous screen without restoring to the factory default settings.

Light control switch

⚠ CAUTION

- **Use of any lights for a long period of time while the engine is not running can cause the battery to discharge.**
- **Before leaving the vehicle, make sure that the light control switch is turned to the off position. If the vehicle is left unattended for a long time with the light control switch set to a position other than the off position, the battery may be discharged.**

Models with “keyless access with push-button start system”:

The light control switch operates when the push-button ignition switch is in the “ACC” or “ON” position.

Regardless of the position of the light control switch, the illuminated lights are turned off when the push-button ignition switch is turned off.

Models without “keyless access with push-button start system”:

The light control switch operates when the key is inserted in the ignition switch.

– CONTINUED –

Regardless of the position of the light control switch, the illuminated lights are turned off when the key is removed from the ignition switch.

NOTE

The light control switch can be operated (except auto on/off headlights), even under the following conditions.

- **when the push-button ignition switch is turned off (models with "keyless access with push-button start system")**
- **when the key is not inserted into the ignition switch (models without "keyless access with push-button start system")**

If the driver's door is opened while the headlights are illuminated under such conditions, a chirp sound will inform the driver that the lights are illuminated.

■ Headlights

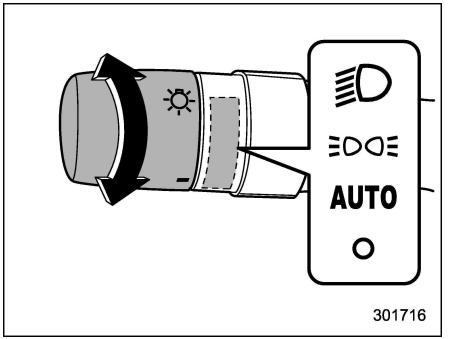

To turn on the headlights, turn the knob on the end of the turn signal lever.

"O" position:
The headlights are all off.

"≣D" position:
Instrument panel illumination, headlights, parking lights, front side marker lights, rear side marker lights, tail lights and license plate lights are on.

"≣DC≣" position:
Instrument panel illumination, parking lights, front side marker lights, rear side marker lights, tail lights and license plate lights are on.

"AUTO" position: auto on/off headlights
When the ignition switch is in the "ON" position, the instrument panel illumination, headlights, parking lights, front side marker lights, rear side marker lights, tail lights and license plate lights are **automatically on or off** depending on the level of the ambient light.

The light sensitivity of the auto on/off headlights can be changed by operating the multi information display. For details, refer to "Auto Headlights" ☞3-45. Also, the setting can be changed by a SUBARU dealer. Consult your SUBARU dealer for details.

▼ Auto-on/off wiper-linked headlights

While the light control switch is in the "AUTO" position, the headlights will automatically turn on when the windshield wipers operate several times. The headlights will automatically turn off when the wipers stop.

The ON/OFF setting of this function can be changed by operating the multi information display. For details, refer to "Auto Headlights" ☞3-45. Also, the setting can be changed by a SUBARU dealer. Consult your SUBARU dealer for details.

▼ Welcome lighting function

The welcome lighting function turns on the low beam headlight for smooth approaching to or exiting from the vehicle at night or in a dark place.

The function is activated while all of the following conditions are met.

- The light control switch is in the “AUTO” position
- It is dark enough to turn on the auto on/off headlights

When approaching:

While the welcome lighting function is activated, the low beam headlights will automatically illuminate when unlocking the doors (for Outback, including the rear gate) by using the remote keyless entry system.

The low beam headlights will remain illuminated for 30 seconds*1 and then turn off. However, if any of the following operations is done, the low beam headlights will turn off.

- The doors are locked.
- The light control switch is turned to a position other than “AUTO”.
- The ignition switch is turned to the “ON” position.

When exiting:

While the welcome lighting function is activated, the low beam headlights will remain illuminated even when either of the following operation is done.

- The push-button ignition switch is turned to the “OFF” status (models with “keyless access with push-button start system”)
- The key is pulled out from the ignition switch (models without “keyless access with push-button start system”)

The low beam headlights will turn off under any of the following conditions.

- 3 minutes have passed since the low beam headlights were illuminated by the welcome lighting function.
- 30 seconds have passed since the door is opened and closed.*1
- The light control switch is turned to a position other than “AUTO”.
- The locking procedure is performed twice. When performing the unlocking procedure after performing the locking procedure, perform the locking procedure twice again.

*1: The setting for the period of time in which the low beam headlights remain on by the welcome lighting function can be changed by a SUBARU dealer. Contact your SUBARU dealer for details. Also, you can change the setting by operating the multi information display. For details, refer to “Welcome Lighting” ☞3-45. For models with the genuine SUBARU navigation system, you can change the setting by using the navigation system. For details, refer to the Owner’s Manual supplement for the navigation system.

– CONTINUED –

▼ Sensor for the auto on/off headlights

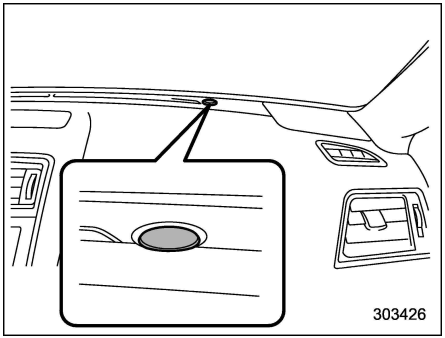

The sensor is on the instrument panel as shown in the illustration.

⚠ CAUTION

If any object is placed on or near the sensor, the sensor may not detect the level of the ambient light correctly and the auto on/off headlights may not operate properly.

■ High/low beam change (dimmer)

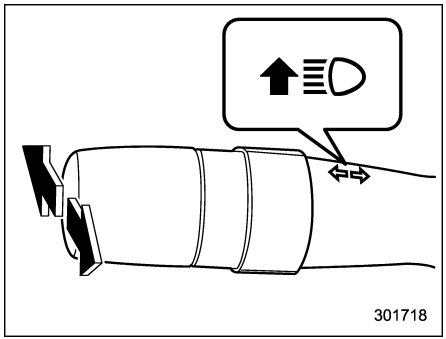

To change from low beam to high beam, push the turn signal lever forward. When the headlights are on high beam, the high beam indicator light "" on the combination meter is also on.

To switch back to low beam, pull the lever back to the center position.

■ High beam assist function (if equipped)

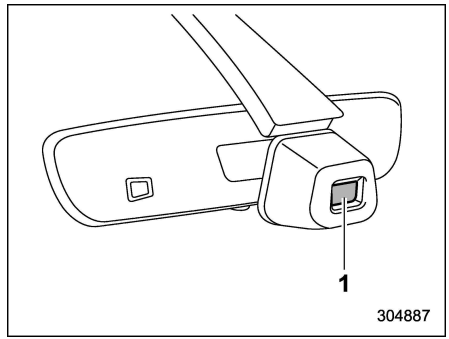

Type A

1) Camera for high beam assist function

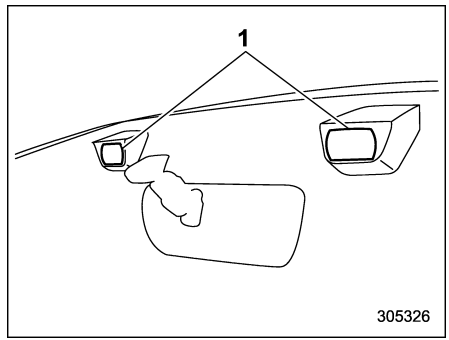

Type B

1) Stereo camera for high beam assist

The high beam assist function automatically changes the headlight between high beam and low beam. When all of the following conditions are met, the headlight will change to high beam.

- When the vehicle speed increases to or above 20 mph (32 km/h).
- There is no preceding vehicle.
- The forward area of the vehicle is dark.
- The road does not have a sharp curve.

When any of the following conditions is met, the headlight will change to low beam.

- When the vehicle speed decreases to or below 10 mph (16 km/h).
- When the forward area of the vehicle is bright.
- When there is a preceding or oncoming vehicle.
- When the EyeSight system is malfunctioning or is temporarily stopped (Type B).

NOTE

- The factory setting (default setting) for this function is set as "operational". This setting can be changed to OFF (non-operation) at SUBARU dealers. For more details, contact a SUBARU dealer.

- Do not overestimate the capacity of the high beam assist function. The driver always has the responsibility to understand the surrounding situation, to drive safely, and to change the headlight mode manually if necessary.

Type A:

- Observe the following points in order to operate the high beam assist function properly.

– Do not touch the camera or the lens.

– Do not apply any strong impact to the camera or the inside mirror.

– Do not disassemble the camera or inside mirror.

– Do not spill liquid on the inside mirror and camera.

– Do not place any objects over the dashboard.

– Do not carry excessive luggage.

– Do not modify the vehicle.

– When replacing the windshield glass, use the genuine SUBARU parts (or equivalent products).

Type B:

- The high beam assist function utilizes the stereo camera installed at the position of the front map lights.

- For details on how to handle the stereo camera, refer to the Owner's Manual supplement for the EyeSight system.

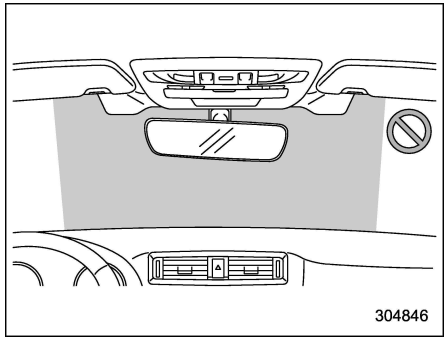

NOTE

Observe the following points in order to operate the high beam assist function properly.

Type A:

- Do not attach labels or stickers to the windshield glass near the camera.

- Do not attach any accessories near the inside mirror and camera.

If it is necessary to attach a label, sticker or accessory in the position shown above, consult your SUBARU dealer.

Type B:

For details, refer to the Owner's Manual supplement for the EyeSight system.

– CONTINUED –

▼ How to use the high beam assist function

The high beam assist function will be activated when all the following conditions are met.

- The light control switch is in the “AUTO” position and the low beam headlights are on automatically.
- The turn signal lever is pushed forward.

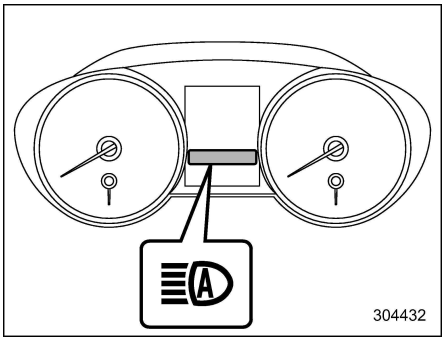

High beam assist indicator (green)

When the high beam assist function is activated, the high beam assist indicator on the combination meter will illuminate.

▼ Malfunction of the high beam assist function

If the high beam assist function is malfunctioning or is temporarily stopped, the headlight will be fixed at low beam.

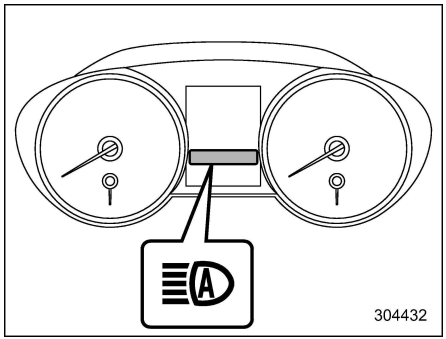

High beam assist warning indicator (yellow)

When the high beam assist function malfunctions, the high beam assist warning indicator on the combination meter will appear. In this case, have your vehicle inspected by your SUBARU dealer.

▼ Temporary stop of high beam assist function

If the high beam assist function stops temporarily due to poor visibility or abnormal temperature, the message appears on the combination meter. Once the conditions have been remedied, drive the vehicle for a while to restore the system.

NOTE

Even when the operation conditions of the high beam assist function are met, there may be a case in which the high beam assist indicator does not illuminate.

Type A:

In this case, turn the ignition switch to the “LOCK”/“OFF” position and then to the “ON” position again. Check if the high beam assist indicator illuminates. If the indicator does not illuminate, have the vehicle inspected at a SUBARU dealer.

Type B:

For details, refer to the Owner’s Manual supplement for the EyeSight system.

▼ How to temporarily lower the sensitivity of the high beam assist function

The sensitivity of the high beam assist function can be lowered by using the following operations.

Type A:

1. Turn the ignition switch to the “ON” position.

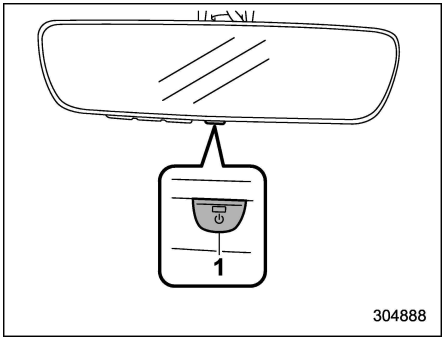

1) Automatic dimming on/off button

2. Press and hold the automatic dimming on/off button for 15 to 20 seconds.

When the sensitivity of the high beam assist function is lowered, the LED indicator on the automatic dimming on/off button will flash.

NOTE

- **The sensitivity of the high beam assist function cannot be lowered while driving.**
- **You can resume the sensitivity of the high beam assist function by using either of the following operations.**
  - **– Turn the ignition switch to the "LOCK"/"OFF" position and then start the engine.**
  - **– Press and hold the automatic dimming on/off button for 15 to 20 seconds again.**

Type B:

1. Before turning the ignition switch to the "ON" position, set the light control switch to the "AUTO" position and push the signal lever forward (high beam position).
2. Turn the ignition switch to the "ON" position and within approximately 15 seconds, press the "/ / " (following distance setting) switch more than 10 times consecutively.

When the sensitivity of the high beam assist function is lowered, the high beam assist indicator light "" (yellow) on the combination meter will flash.

NOTE

- **The sensitivity of the high beam assist function cannot be lowered in the following conditions.**
  - **– Cruise control or Adaptive Cruise Control is in operation**
  - **– The EyeSight warning indicator (yellow) is illuminated**
- **The sensitivity of the high beam assist function returns to normal level the next time the ignition switch is turned to the "LOCK"/"OFF" position and the engine is restarted.**

▼ How to change the headlight mode manually

Change to the low beam:

When you return the turn signal lever to the center position, the high beam assist function will turn off and the high beam assist indicator will turn off.

Change to the high beam:

When you turn the light control switch to the "" position, the headlight mode will be changed to the high beam.

At this time, the high beam assist function will turn off, the high beam assist indicator will turn off and the high beam indicator light will turn on.

NOTE

- **After manually changing the headlight mode to the high beam, if you turn on the high beam assist function, return the light control switch to the "AUTO" position.**
- **When manually changing the headlight mode to the high beam, if you turn the light control switch to the "" position, the parking lights, front side**

– CONTINUED –

marker lights, rear side marker lights, tail lights and license plate lights will turn on.

▼ Tips for the high beam assist system

- The high beam assist function recognizes the condition surrounding the vehicle based on the brightness of illumination ahead of your vehicle, etc. Therefore, the headlight mode may switch in some situations that do not match to the driver's sense.
- A bicycle or cargo cycle may not be detected.
- Under the following situations, the brightness of ambient illumination may not be detected correctly and the high beam assist function may not work properly. As a result, the glare of the high beam may disturb the oncoming vehicle or vehicle ahead. Also, the low beam mode may continue although there are no oncoming vehicles and vehicles ahead. In the such cases, change the headlight mode manually.
  - In bad weather (fog, snow, sand storm, heavy rain, etc.).
  - When the windshield glass is dirty or fogged.
  - When the windshield is cracked or damaged.
  - If there are lights similar to the headlights or the tail lights in the surrounding area.
  - When an oncoming vehicle or vehicle ahead is driven without its headlights and tail lights on.
  - If the headlights of an oncoming vehicle or the tail lights of a vehicle ahead are dirty or discolored, or if the light beams are not aimed correctly.
  - When a rapid change of brightness continues while driving.
  - When driving on a road with many ups and downs or uneven surfaces.
  - When driving on a road with many curves.
  - When there are some objects that reflect light strongly, such as a road sign or a mirror in vehicle ahead.
  - When the rear part of the vehicle ahead, such as a container, reflects light strongly.
  - When the headlights of your vehicle are damaged or dirty.
  - When your vehicle is tilted, such as in case the vehicle has a flat tire or is being towed.
  - When the inside mirror or the camera is deformed or dirty (Type A).
  - When the stereo camera is deformed or the stereo camera lenses are dirty (Type B).
  - Immediately after the engine has started (Type B).
- In the following conditions, the headlight mode will not be automatically changed from the high beam to the low beam.
  - When your vehicle passes an oncoming vehicle suddenly in a blind curve.
  - When another vehicle passes in front of your vehicle.
  - When an oncoming vehicle or vehicle ahead comes in and out of view because of continuous curves, median strips, roadside trees, etc.
- If the camera (Type A)/stereo camera (Type B) detects the light of the front fog lights of an oncoming vehicle, the headlight mode may change from the high beam to the low beam automatically.
- The headlight mode may change from the high beam to the low beam, or the low beam mode may continue, when affected by a street light, traffic signal, illumination of an advertisement board, or a reflective object such as a road sign and signboard.
- The timing of the change of headlight mode may differ due to the following factors.

  Type A:
  - the vehicle condition (e.g., number of passengers or weight of loaded cargo).

– surrounding situation (e.g., movement and direction of an oncoming vehicle or vehicle ahead).
– detection limitations of the camera angle.

Type B:

– Color or brightness of the headlights of an oncoming vehicle or the tail lights of a vehicle ahead.
– The headlights of the oncoming vehicle or the tail lights of the vehicle ahead are covered with mud, snow, etc.
– Movement and direction of an oncoming vehicle or a vehicle ahead.
– When the headlights of an oncoming vehicle or the tail lights of a vehicle ahead illuminate on only one side.
– When the oncoming vehicle or vehicle ahead is a motorcycle.
– Conditions of a road (slope, curve, road surface, etc.).
– Number of passengers and weight of loaded cargo.
– Limitation of the detection ability of the stereo camera.

■ Headlight flasher

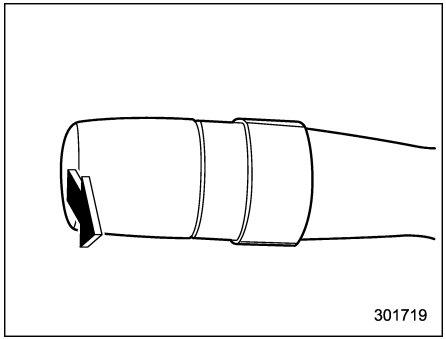

⚠ CAUTION

Do not hold the lever in the flashing position for more than just a few seconds.

To flash the headlights, pull the lever toward you and then release it. The high beam will stay on for as long as you hold the lever. The headlight flasher works even though the lighting switch is in the off position.

When the headlights are on high beam, the high beam indicator light "" on the combination meter also illuminates.

■ Daytime running light system

⚠ WARNING

The brightness of the illumination of the high beam headlights is reduced by the daytime running light system. The light switch must always be turned to the "" position when it is dark outside.

The high beam headlights will automatically illuminate at reduced brightness when the engine has started, under the following conditions.

- The parking brake is fully released.
- The light switch is in the off or "" position.
- The light switch is in the "AUTO" position and the headlights do not turn on automatically.
- The select lever is in a position other than the "P" position.

NOTE

- **When the light switch is in the "" position, the front side marker lights, tail lights and license plate lights are illuminated.**
- **While the turn signal is flashing, the high beam headlight on the side which the turn signal is flashing turns off.**

– CONTINUED –

- **While the hazard warning flasher is on, the high beam headlights turn off.**

Steering Responsive Headlight (SRH) (if equipped)

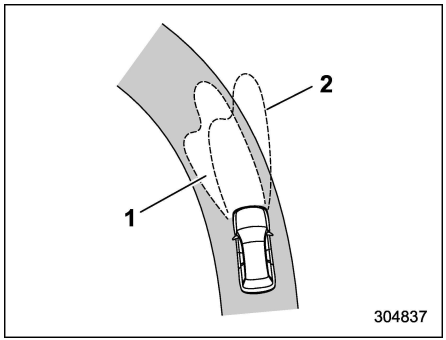

1) The target area of illumination when SRH is activated
2) The target area of illumination when SRH is not activated

SRH is a function that automatically moves the headlight beam to the left or right in accordance with the steering angle. This function helps to improve the visibility at night by illuminating the road ahead at corners and intersections.

You can turn the SRH function on or off. The settings can be changed by using the combination meter display. For details, refer to “SRH” ☞3-43.

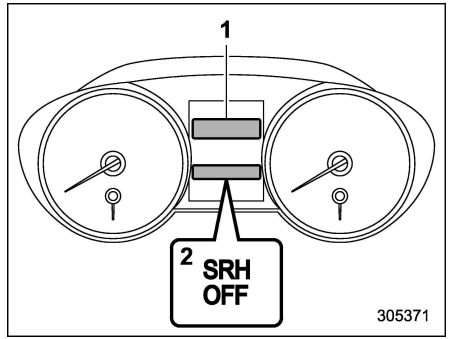

1) Warning screen
2) SRH OFF indicator

The SRH OFF indicator on the combination meter turns off when SRH is turned on.

The SRH OFF indicator on the combination meter illuminates when SRH is turned off.

If SRH is malfunctioning, the SRH OFF indicator on the combination meter blinks and a message appears on the warning screen when the ignition switch is in the “ON” position. It indicates that SRH has been deactivated. Contact a SUBARU dealer for an inspection.

NOTE

- **If you turn the ignition switch to the “OFF” position with SRH turned off and**

then start the engine again, SRH will automatically turn on.

- **When you turn the ignition switch to the "ON" position, the SRH OFF indicator will illuminate and turn off after several seconds.**
- **SRH only activates when the vehicle is traveling forward at the speed of approximately 5 mph (8 km/h) or more.**

Headlight beam leveler (models with LED headlights)

The LED headlights generate more light than conventional halogen headlights.

Therefore a driver of an oncoming vehicle may experience too much glare when your headlight beam height adjustment is high due to the vehicle carrying heavy load.

The automatic headlight beam leveler adjusts the headlight beam height automatically and optimally according to the load being carried by the vehicle.

Turn signal lever

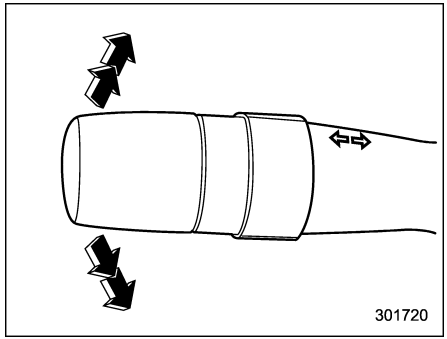

To activate the right turn signal, push the turn signal lever up. To activate the left turn signal, push the turn signal lever down. When the turn is finished, the lever will return automatically. If the lever does not return after cornering, return the lever to the neutral position by hand.

To signal a lane change, push the turn signal lever up or down slightly and hold it during the lane change. The turn signal indicator lights will flash in the direction of the turn or lane change. The lever will return automatically to the neutral position when you release it.

– CONTINUED –

■ One-touch lane changer

To flash the turn signal and turn signal indicator light three times, push the turn signal lever up or down slightly and immediately release it.

The operational/non-operational setting of the one-touch lane changer's can be changed by a SUBARU dealer. Contact the nearest SUBARU dealer for details.

Illumination brightness control

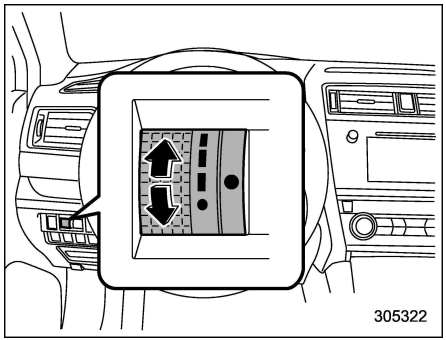

The illumination brightness of the instrument panel dims under the following conditions.

- when the light switch is in the "≡DC≡" or "≡D" position
- when the light switch is in the "AUTO" position and the headlights illuminate automatically

You can adjust the illumination brightness for better visibility.

To brighten, turn the control dial upward.

To darken, turn the control dial downward.

NOTE

- **When the control dial is turned fully upward, the illumination brightness becomes the maximum and the automatic dimming function does not work at all.**
- **The brightness setting is not canceled even when the ignition switch is turned to the "LOCK"/"OFF" position.**

■ Auto dimmer cancel function

When the ambient light is bright, the illumination brightness is set to the maximum regardless of the position of the control dial. In this case, you cannot adjust the illumination brightness by using the control dial. When the ambient light is dark, you can dim the illumination brightness as described above.

The operational/non-operational setting and sensitivity of the auto dimmer cancel function can be changed by your SUBARU dealer. Contact your SUBARU dealer for details.

Front fog light switch (if equipped)

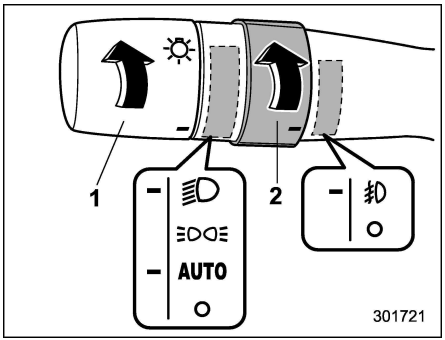

1) Headlight switch
2) Fog light switch

To turn on the front fog lights:

Turn the fog light switch to the "" position while the headlights are in either of the following conditions.

- while the headlight switch is in the "" position with the low beam mode selected
- while the headlight switch is in the "AUTO" position and the low beam headlights turn on automatically

To turn off the front fog lights:

Turn the fog light switch back down to the "O" position.

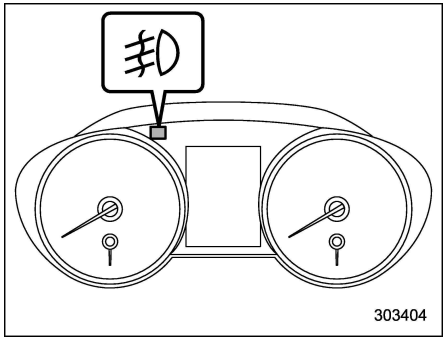

Indicator light

The indicator light located on the combination meter will illuminate when the front fog lights are on.

Wiper and washer

WARNING

In freezing weather, do not use the windshield washer until the windshield is sufficiently warmed by the defroster.

Otherwise the washer fluid can freeze on the windshield, blocking your view.

CAUTION

- **Do not operate the washer continuously for more than 10 seconds, or when the washer fluid tank is empty. This may cause overheating of the washer motor. Check the washer fluid level frequently, such as at fuel stops.**
- **Do not operate the wipers when the windshield or rear window is dry. This may scratch the glass, damage the blade rubbers and might cause the wiper motor to fail. Before operating the wiper on a dry windshield or rear window, always use the windshield washer.**

– CONTINUED –

- In freezing weather, be sure that the blade rubbers are not frozen to the windshield or rear window before switching on the wipers. Attempting to operate the wiper with the blade rubbers frozen to the window glass could cause not only the blade rubbers to be damaged but also might cause the wiper motor to fail. If the blade rubbers are frozen to the window glass, be sure to operate the defroster, windshield wiper deicer (if equipped) or rear window defogger before turning on the wiper.
- If the wipers stop during operation because of ice or some other obstruction on the window, this might cause the wiper motor to fail even if the wiper switch is turned off. If this occurs, promptly stop the vehicle in a safe location, turn the ignition switch to the "LOCK"/"OFF" position and clean the window glass to allow proper wiper operation.
- Use clean water if windshield washer fluid is unavailable. In areas where water freezes in winter, use SUBARU Windshield Washer Fluid or the equivalent. Refer to "Windshield washer fluid" ☞11-30.

  Also, when driving the vehicle when there are freezing temperatures, use non-freezing type wiper blades.
- Do not clean the wiper blades with gasoline or a solvent, such as paint thinner or benzine. This will cause deterioration of the wiper blades.

NOTE

- The windshield wiper motor is protected against overloads by a circuit breaker. If the motor operates continuously under an unusually heavy load, the circuit breaker may trip to stop the motor temporarily. If this happens, park your vehicle in a safe location, turn off the wiper switch, and wait for approximately 10 minutes. The circuit breaker will reset itself, and the wipers will again operate normally.
- Clean your blade rubbers and window glass periodically with a washer solution to prevent streaking, and to remove accumulations of road salt or road film. Operate the windshield washer for at least 1 second so that washer solution will be sprinkled all over the windshield or rear window.
- Grease, wax, insects or other material on the windshield or the blade rubbers results in jerky wiper operation and streaking on the glass. If you cannot remove those streaks after operating the washer or if the wiper operation is jerky, clean the outer surface of the windshield or rear window and the blade rubbers using a sponge or soft cloth with a neutral detergent or mild abrasive cleaner. After cleaning, rinse the window glass and blade rubbers with clean water. The glass is clean if no beads form on the glass when you rinse with water.
- If you cannot eliminate the streaking even after following this procedure, replace the wiper blades (or blade rubbers) with new ones. For replacement instructions, refer to "Replacement of wiper blades" ☞11-31.

■ Windshield wiper and washer switches

The wiper operates only when the ignition switch is in the “ON” position.

▼ Windshield wipers

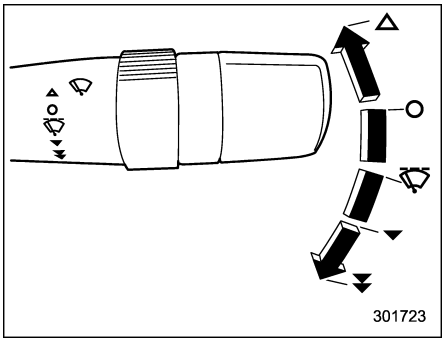

△ : Mist (for a single wipe)
○ : Off
: Intermittent
▼ : Low speed
▼▼ : High speed

To turn the wipers on, push the wiper control lever down.

To turn the wipers off, return the lever to the “○” position.

For a single wipe of the wipers, push the lever up. The wipers operate until you release the lever.

▼ Wiper intermittent time control

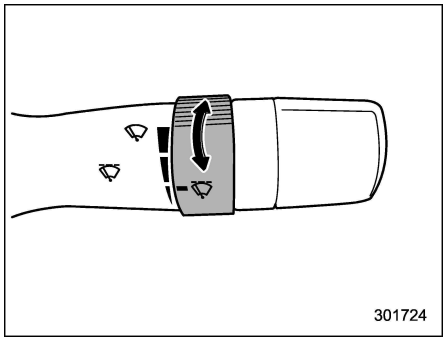

When the wiper switch is in the “” position, turn the dial to adjust the operating interval of the wiper. The operating interval can be adjusted in several steps from the shortest interval to the longest.

▼ Windshield washer

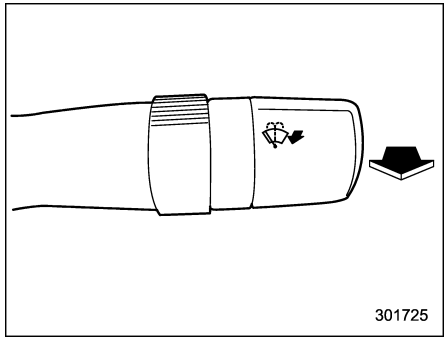

To wash the windshield, pull the wiper control lever toward you. The washer fluid sprays until you release the lever. The wipers operate while you pull the lever.

– CONTINUED –

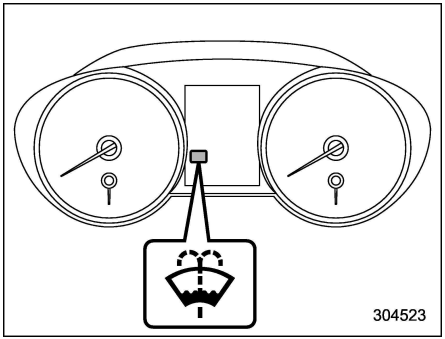

Windshield washer fluid warning indicator

NOTE

The windshield washer fluid warning indicator appears when the washer fluid level in the tank has dropped to the lower limit. If the warning indicator appears, refill the tank with fluid. For the tank refilling method, refer to "Windshield washer fluid" ☞11-30.

■ Rear window wiper and washer switch (Outback)

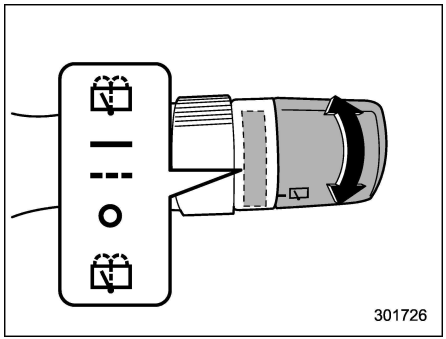

- : Washer (accompanied by wiper operation)
- — : Continuous
- - - - : Intermittent
- O : Off
- : Washer (accompanied by wiper operation)

▼ Rear wiper

To turn the rear wiper on, turn the knob switch upward.

To turn the wiper off, return the knob switch to the "O" position.

With the switch turned to the "- - -" position, the rear wiper will operate intermittently at intervals corresponding to the vehicle speed. In this position, when you move the select lever to the "R" position, the rear wiper will switch to continuous operation. When you move the select lever from the "R" (reverse) position to another position, the rear wiper will return to intermittent operation.

Reverse gear interlocked rear wiper:

Even if the rear wiper switch is in the off "O" position, if the front windshield wiper is operating continuously, the rear wiper will operate intermittently when you move the select lever to the "R" (reverse) position.

The factory setting (default setting) of the reverse gear interlocked rear wiper is as follows.

- U.S.-spec. models: Non-operational
- Other models: Operational

This setting can be changed by a SUBARU dealer. Consult your SUBARU dealer for details.

⚠ CAUTION

Do not attach anything that disturbs the rear wiper operation on the rear gate. Doing so may damage the rear wiper when it operates.

▼ **Washer**

To wash the rear window while the rear wiper is operating, turn the knob switch upward to the "" position. The washer fluid sprays until you release the knob.

To wash the rear window when the rear wiper is not in use, turn the knob switch downward to the "" position. The washer fluid sprays and the wiper operates until you release the knob.

NOTE

When the amount of washer fluid is getting low, the rear washer fluid will first be stopped. This means that the amount of washer fluid is low, and it should be added immediately.

Defogger and deicer

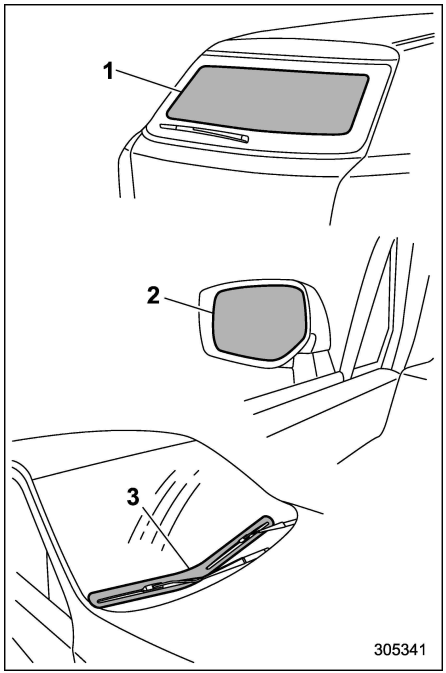

1) Rear window defogger
2) Outside mirror defogger (if equipped)
3) Windshield wiper deicer (if equipped)

The defogger and deicer system is activated only when the ignition switch is in the "ON" position.

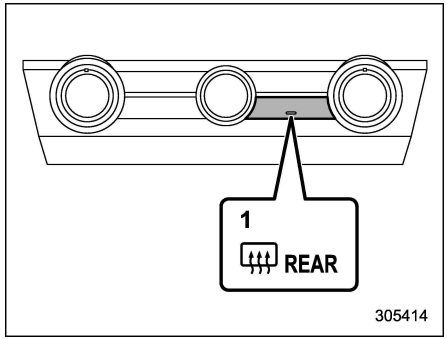

Control switch (type A)

1) Rear window defogger button

– CONTINUED –

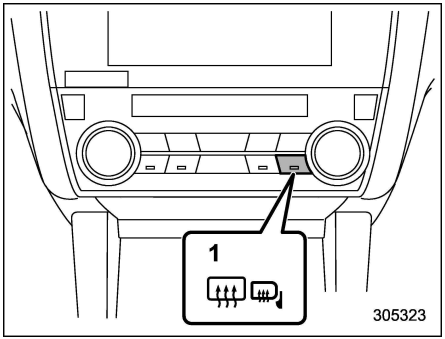

Control switch (type B)

1) Rear window and outside mirror defogger button

To activate the defogger and deicer system, press the control switch. The rear window defogger, outside mirror defogger and windshield wiper deicer are activated simultaneously. The indicator light on the control switch illuminates while the defogger and deicer system is activated.

To turn them off, press the control switch again. They also turn off when the ignition switch is turned to the “ACC” or “LOCK”/ “OFF” position.

The defogger and deicer system will automatically shut off after approximately 15 minutes. If the rear window and outside mirrors have been cleared and the windshield wiper blade rubbers have been deiced completely before that time, press the control switch to turn them off. If defrosting, defogging or deicing is not complete, you have to press the control switch to turn them on again.

It is possible to set the defogger and deicer system for the continuous operation mode by operating the multi information display. For details, refer to “Defogger” ☞3-44.

⚠ CAUTION

- **To prevent the battery from being discharged, do not operate the defogger and deicer system continuously for any longer than necessary.**
- **Do not use sharp instruments or window cleaner containing abrasives to clean the inner surface of the rear window. They may damage the conductors printed on the window.**

NOTE

- **Turn on the defogger and deicer system if the wipers are frozen to the windshield.**
- **If the windshield is covered with snow, remove the snow so that the windshield wiper deicer works effectively.**
- **While the defogger and deicer system is in the continuous operation mode:**
  - **If the vehicle speed remains at 9 mph (15 km/h) or lower for 15 minutes, the windshield wiper deicer system automatically stops operating. However, the rear window defogger system and outside mirror defogger system maintain continuous operation in this condition.**
  - **If the vehicle battery voltage drops below the permissible level, continuous operation of the defogger system and deicer system is canceled and the system stops operating.**

Mirrors

Always check that the inside and outside mirrors are properly adjusted before you start driving.

■ Inside mirror (without auto-dimming function) (if equipped)

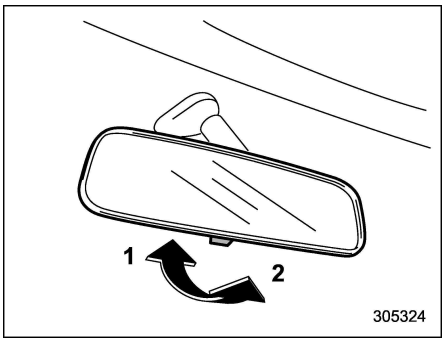

1) Normal position
2) Anti-glare position

Push the tab on the mirror for normal use. To reduce glare from the headlights of the vehicle behind you, pull the tab to the anti-glare position.

■ Auto-dimming mirror/compass with HomeLink® (U.S.-spec. models without EyeSight system - if equipped)

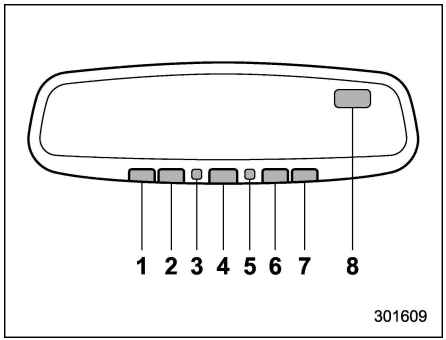

1) HomeLink® button 1
2) HomeLink® button 2
3) LED
4) HomeLink® button 3
5) Sensor
6) Automatic dimming on/off button
7) Compass display button
8) Compass display

The auto-dimming mirror has an anti-glare feature which automatically reduces glare coming from headlights of vehicles behind you. It also contains a built-in compass and HomeLink® wireless control system.

- By pressing the automatic dimming on/off button, the automatic dimming function is toggled on or off. When the automatic dimming function is on, the LED indicator will illuminate.

Even with the mirror in the automatic dimming mode, the mirror surface turns bright if the transmission is shifted into reverse. This is to ensure good rearward visibility during reversing.

- By pressing the compass display button, the compass display is toggled on or off. When the compass is on, an illuminated compass reading will appear in the upper right corner of the mirror.

When cleaning the mirror, use a paper towel or similar material dampened with glass cleaner. Do not spray glass cleaner directly on the mirror as that may cause the liquid cleaner to enter the mirror housing and damage the mirror.

– CONTINUED –

▼ Photosensors

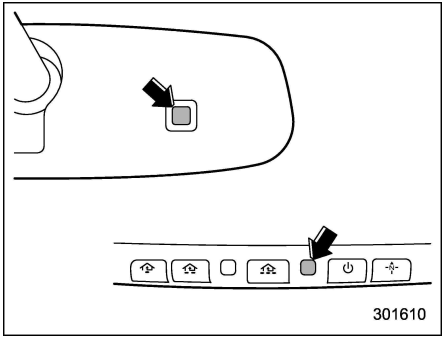

The mirror has a photosensor attached on both the front and back sides. During nighttime driving, these sensors detect distracting glare from vehicle headlights behind you and automatically dim the mirror to eliminate glare and preserve your vision. For this reason, use care not to cover the sensors with stickers, or other similar items. Periodically wipe the sensors clean using a piece of dry soft cotton cloth or an applicator.

▼ Compass zone adjustment

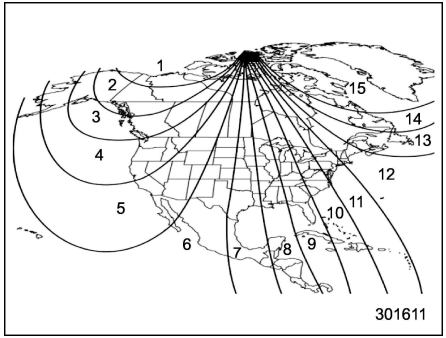

Compass calibration zones

1. Refer to the “Compass calibration zones” map shown above to verify that the compass zone setting is correct for your geographical location.
2. Press and hold the compass display button for 3 seconds until the zone selection comes up (a number will be displayed in the mirror compass window).
3. Press the compass display button repeatedly until the correct zone setting for your location is displayed.
4. Releasing the button for 5 seconds will exit the zone setting mode.

▼ Compass calibration

1. If a “C” is displayed in the compass window, the compass needs to be calibrated.
2. Drive the vehicle in a circle at 5 mph (8 km/h) or less until the display reads a direction.
3. You can also calibrate the compass by driving your vehicle on your everyday routine. The compass will be calibrated once it has tracked a complete circle.
4. To recalibrate your compass, push and hold the compass display button for 9 seconds until a “C” appears in the compass window.
5. Calibrate the compass according to step 2 or step 3.

▼ HomeLink® Wireless Control System

The HomeLink® Wireless Control System can be used to activate remote control devices such as gate operators, garage door openers, door locks, home lighting and security systems.

There are three HomeLink® buttons on the mirror, each of which can be programmed for operation of one desired device. For details on the device types which can be operated by this system, consult the HomeLink® website at:

www.homelink.com or call 1-800-355-3515.

- **U.S.-spec. models**

CAUTION

FCC WARNING

Changes or modifications not expressly approved by the party responsible for compliance could void the user's authority to operate the equipment.

This device complies with part 15 of the FCC Rules. Operation is subject to the following two conditions: (1) This device may not cause harmful interference, and (2) this device must accept any interference received, including interference that may cause undesired operation.

- **Canada-spec. models**

NOTE

This device complies with Industry Canada's licence-exempt RSSs. Operation is subject to the following two conditions: (1) This device may not cause interference; and (2) This device must accept any interference, including interference that may cause undesired operation of the device.

REMARQUE

Le présent appareil est conforme aux CNR d'Industrie Canada applicables aux appareils radio exempts de licence. L'exploitation est autorisée aux deux conditions suivantes: (1) l'appareil ne doit pas produire de brouillage; (2) l'utilisateur de l'appareil doit accepter tout brouillage radioélectrique subi, même si le brouillage est susceptible d'en compromettre le fonctionnement.

203226

HomeLink® and the HomeLink® house are registered trademarks of Gentex Corporation.

WARNING

- **When programming the HomeLink® Wireless Control System, you may be operating a garage door opener or other device. Make sure that people and objects are out of the way of the garage door or other device to prevent potential harm or damage.**
- **Do not use the HomeLink® Wireless Control System with a garage door opener that lacks the safety stop and reverse feature as required by applicable safety standards. A garage door opener which cannot detect an object, signaling the door to stop and reverse, does not meet these safety standards. Using a garage door opener without these features increases risk of serious injury or death. For more information, consult the HomeLink® website at www.homelink.com or call 1-800-355-3515.**

– CONTINUED –

⚠ CAUTION

When programming the HomeLink® Wireless Control System to operate a garage door opener or an entrance gate, unplug the device's motor from the outlet during programming to prevent motor burnout.

NOTE

- **After programming your HomeLink® Wireless Control System for the desired devices, retain the hand-held transmitters for further programming or device testing in the event of a problem.**
- **It is recommended that you insert a new battery in the hand-held transmitter of a device to ensure correct programming.**

▽ **Garage door opener programming in the U.S.A.**

NOTE

When programming the HomeLink® Wireless Control System for a garage door opener, it is suggested that you park the vehicle outside the garage.

1. Unplug the motor of the garage door opener from the outlet.

NOTE

If any of the HomeLink® buttons are already programmed for other devices, skip step 2 because it clears the memory of all three buttons.

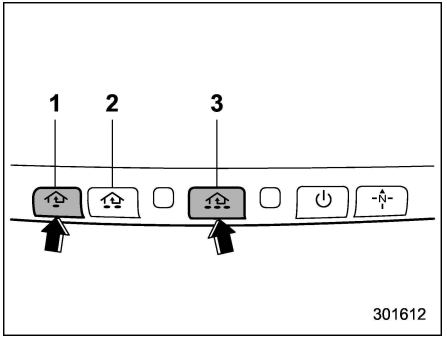

1) HomeLink® button 1
2) HomeLink® button 2
3) HomeLink® button 3

2. Press and hold the two outer HomeLink® buttons (button 1 and button 3) until the indicator light begins to flash (after approximately 10 seconds). Then release both buttons.
3. Hold the end of the garage door opener's hand-held transmitter between 1 and 3 inches (25 and 76 mm) away from the HomeLink® button you wish to program.
4. Simultaneously press and hold both the hand-held transmitter button and the desired HomeLink® button. DO NOT release the buttons until step 5 has been completed.

NOTE

Some gate operators and garage door openers may require you to replace this programming step 4 with procedures in "Programming for entrance gates and garage door openers in Canada" ☞3-67.

5. Hold down both buttons until the HomeLink® indicator light flashes, first slowly then rapidly. When the indicator light flashes rapidly, both buttons may be released. (The rapidly flashing light indicates successful programming of the new frequency signal.)
6. Press and hold the programmed button and check the HomeLink® indicator light. If the indicator light stays on continuously, your garage door should activate and the programming is completed.

If the indicator light flashes rapidly for 2 seconds and then stays on continuously, your garage door opener may be protected by a rolling code feature. In this case you need to perform the additional steps that are described in "Programming rolling-code-protected garage door openers in

the U.S.A.” ☞3-67.

▽ **Programming rolling-code-protected garage door openers in the U.S.A.**

If your garage door opener has a rolling code feature, program the HomeLink® Wireless Control System for it by following steps 1 through 5 in “Garage door opener programming in the U.S.A.” ☞3-66. Then continue with the following steps.

NOTE

The assistance of a second person may make the programming quicker and easier.

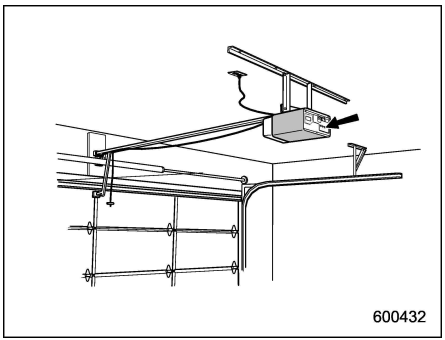

1. Locate the training button on the garage door opener motor head unit. The exact location and color of the button may vary by brand of garage door opener. If it is difficult to locate the training button, refer to your garage door opener’s instruction manual.

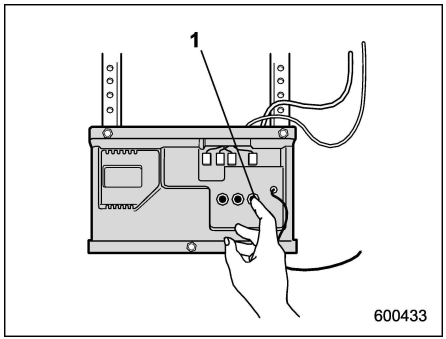

1) Training button

2. Press the training button on the garage door opener motor head unit (which activates the “training light” on the unit). Proceed to step 3 within 30 seconds.

3. Inside the vehicle, firmly press, hold for 2 seconds and release the HomeLink® button that was programmed in the previous section. Press and release the button a second time to complete the programming procedure.

NOTE

Some garage door openers may require you to do the above press-hold-release sequence a third time to complete the programming.

4. The garage door opener should now recognize the HomeLink® Wireless Control System and your garage door opener should activate when the HomeLink® button is pressed.

▽ **Programming for entrance gates and garage door openers in Canada**

1. Unplug the motor of the entrance gate or garage door opener from the outlet.

NOTE

If any of the HomeLink® buttons are already programmed for other devices, skip step 2 because it clears the memory of all three buttons.

– CONTINUED –

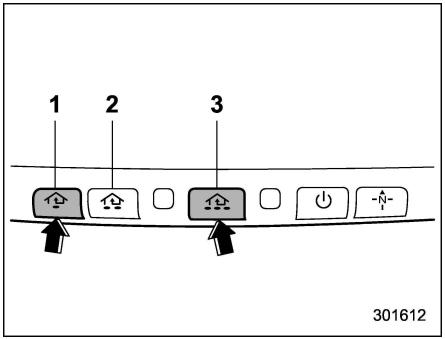

1) HomeLink® button 1
2) HomeLink® button 2
3) HomeLink® button 3

2. Press and hold the two outer HomeLink® buttons (button 1 and button 3) until the HomeLink® indicator light begins to flash (after approximately 10 seconds). Then release both buttons.

3. Hold the end of the entrance gate's/garage door opener's hand-held transmitter between 1 and 3 inches (25 and 76 mm) away from the HomeLink® button you wish to program.

4. Press and hold the desired HomeLink® button.

5. Press and release ("cycle") the hand-held transmitter button every 2 seconds until step 6 is complete.

6. When the indicator light flashes slowly and then rapidly after several seconds, release both buttons.

7. Plug the motor of the entrance gate/garage door opener to the outlet.

8. Test your entrance gate/garage door opener by pressing the programmed HomeLink® button.

▽ Operating the HomeLink® Wireless Control System

Once programmed, the HomeLink® Wireless Control System can be used to remote-control the devices to which its buttons are programmed. To activate a device, simply press the appropriate button. The indicator light illuminates, indicating that the signal is being transmitted.

▽ Programming other devices

To program other devices such as door locks, home lighting and security systems, contact HomeLink® at www.homelink.com or call 1-800-355-3515.

▽ Reprogramming a single HomeLink® button

1. Press and hold the HomeLink® button you wish to reprogram. DO NOT release the button until step 4 has been completed.

2. When the HomeLink® indicator light begins to flash slowly (after approximately 20 seconds), position the hand-held transmitter of the device between 1 to 3 inches (25 to 76 mm) away from the HomeLink® button you wish to program.

3. Press and hold the hand-held transmitter button. The HomeLink® indicator light will flash, first slowly and then rapidly.

4. When the indicator light begins to flash rapidly, release both buttons.

The programming for the previous device is now erased and the new device can be operated by pressing the HomeLink® button.

▽ Erasing HomeLink® button memory

NOTE

- **Performing this procedure erases the memory of all the preprogrammed buttons simultaneously. The memory of individual buttons cannot be erased.**
- **It is recommended that upon the sale of the vehicle, the memory of all programmed HomeLink® buttons be erased for security purposes.**

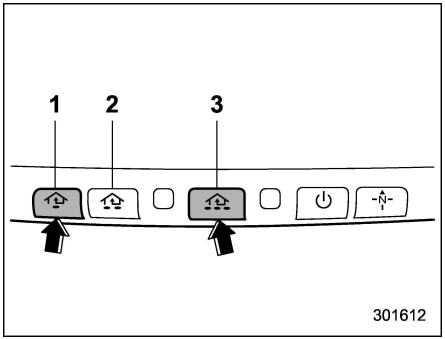

1) HomeLink® button 1
2) HomeLink® button 2
3) HomeLink® button 3

1. Press and hold the two outer buttons (button 1 and button 3) until the indicator light begins to flash (after approximately 20 seconds).
2. Release both buttons.

▽ In case a problem occurs

If you cannot activate a device using the corresponding HomeLink® button after programming, contact HomeLink® at www.homelink.com or call 1-800-355-3515 for assistance.

■ Auto-dimming mirror with HomeLink® (except U.S.-spec. models - if equipped)

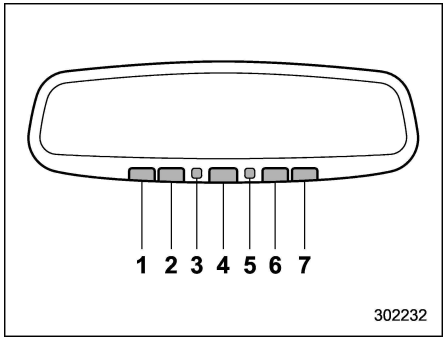

1) HomeLink® button 1
2) HomeLink® button 2
3) LED
4) HomeLink® button 3
5) Sensor
6) Automatic dimming on button
7) Automatic dimming off button

The auto-dimming mirror has an anti-glare feature which automatically reduces glare coming from headlights of vehicles behind you. It also contains a HomeLink® wireless control system.

By pressing the automatic dimming on/off button, the automatic dimming function is turned on or off. When the automatic dimming function is on, the LED indicator will illuminate.

Even with the mirror in the automatic dimming mode, the mirror surface turns bright if the select lever is shifted into the “R” (reverse) position. This is to ensure good rearward visibility during reversing.

When cleaning the mirror, use a paper towel or similar material dampened with glass cleaner. Do not spray glass cleaner directly on the mirror as that may cause the liquid cleaner to enter the mirror housing and damage the mirror.

▼ Photosensors

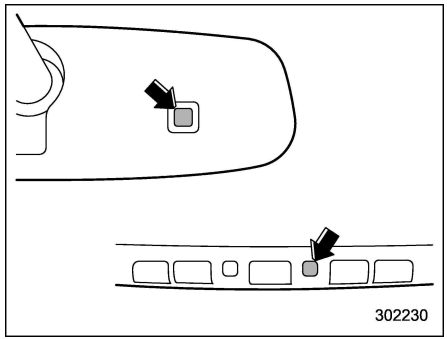

The mirror has a photosensor attached on both the front and back sides. During nighttime driving, these sensors detect distracting glare from vehicle headlights

– CONTINUED –

behind you and automatically dim the mirror to eliminate glare and preserve your vision. For this reason, use care not to cover the sensors with stickers, or other similar items. Periodically wipe the sensors clean using a piece of dry soft cotton cloth or an applicator.

▼ HomeLink® Wireless Control System

The HomeLink® Wireless Control System can be used to activate remote control devices such as gate operators, garage door openers, door locks, home lighting and security systems.

There are three HomeLink® buttons on the mirror, each of which can be programmed for operation of one desired device. For details on the device types which can be operated by this system, consult the HomeLink® website at:
www.homelink.com or call 1-800-355-3515.

- **U.S.-spec. models**

⚠ CAUTION

FCC WARNING

Changes or modifications not expressly approved by the party responsible for compliance could void the user's authority to operate the equipment.

This device complies with part 15 of the FCC Rules. Operation is subject to the following two conditions: (1) This device may not cause harmful interference, and (2) this device must accept any interference received, including interference that may cause undesired operation.

- **Canada-spec. models**

NOTE

This device complies with Industry Canada's licence-exempt RSSs. Operation is subject to the following two conditions: (1) This device may not cause interference; and (2) This device must accept any interference, including interference that may cause undesired operation of the device.

REMARQUE

Le présent appareil est conforme aux CNR d'Industrie Canada applicables aux appareils radio exempts de licence. L'exploitation est autorisée aux deux conditions suivantes: (1) l'appareil ne doit pas produire de brouillage; (2) l'utilisateur de l'appareil doit accepter tout brouillage radioélectrique subi, même si le brouillage est susceptible d'en compromettre le fonctionnement.

203226

HomeLink® and the HomeLink® house are registered trademarks of Gentex Corporation.

⚠ WARNING

- **When programming the HomeLink® Wireless Control System, you may be operating a garage door opener or other device. Make sure that people and objects are out of the way of the garage door or other device to prevent potential harm or damage.**
- **Do not use the HomeLink® Wireless Control System with a garage door opener that lacks the safety stop and reverse feature as required by applicable safety standards. A garage door opener which cannot detect an object, signaling the door to stop and reverse, does not meet these safety standards. Using a garage door opener without these features increases risk of serious injury or death. For more information, consult the HomeLink® website at www.homelink.com or call 1-800-355-3515.**

⚠ CAUTION

When programming the HomeLink® Wireless Control System to operate a garage door opener or an entrance gate, unplug the device's motor from the outlet during programming to prevent motor burnout.

NOTE

- **After programming your HomeLink® Wireless Control System for the desired devices, retain the hand-held transmitters for further programming or device testing in the event of a problem.**
- **It is recommended that you insert a new battery in the hand-held transmitter of a device to ensure correct programming.**

▽ **Garage door opener programming in the U.S.A.**

NOTE

When programming the HomeLink® Wireless Control System for a garage door opener, it is suggested that you park the vehicle outside the garage.

1. Unplug the motor of the garage door opener from the outlet.

NOTE

If any of the HomeLink® buttons are already programmed for other devices, skip step 2 because it clears the memory of all three buttons.

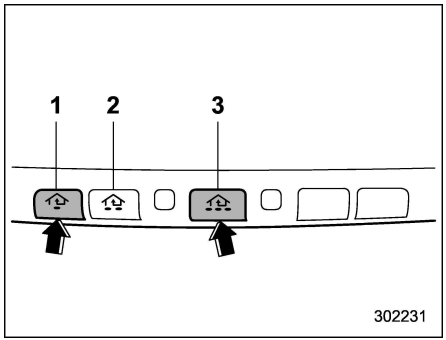

1) HomeLink® button 1
2) HomeLink® button 2
3) HomeLink® button 3

2. Press and hold the two outer HomeLink® buttons (button 1 and button 3) until the indicator light begins to flash (after approximately 20 seconds). Then release both buttons.
3. Hold the end of the garage door opener's hand-held transmitter between 1 and 3 inches (25 and 76 mm) away from the HomeLink® button you wish to program.
4. Simultaneously press and hold both

– CONTINUED –

the hand-held transmitter button and the desired HomeLink® button. DO NOT release the buttons until step 5 has been completed.

NOTE

Some gate operators and garage door openers may require you to replace this programming step 4 with procedures in "Programming for entrance gates and garage door openers in Canada" ☞3-73.

5. Hold down both buttons until the HomeLink® indicator light flashes, first slowly then rapidly. When the indicator light flashes rapidly, both buttons may be released. (The rapidly flashing light indicates successful programming of the new frequency signal.)
6. Press and hold the programmed button and check the HomeLink® indicator light. If the indicator light stays on continuously, your garage door should activate and the programming is completed.

If the indicator light flashes rapidly for 2 seconds and then stays on continuously, your garage door opener may be protected by a rolling code feature. In this case you need to perform the additional steps that are described in "Programming rolling-code-protected garage door openers in the U.S.A." ☞3-72.

▽ Programming rolling-code-protected garage door openers in the U.S.A.

If your garage door opener has a rolling code feature, program the HomeLink® Wireless Control System for it by following steps 1 through 5 in "Garage door opener programming in the U.S.A." ☞3-71. Then continue with the following steps.

NOTE

The assistance of a second person may make the programming quicker and easier.

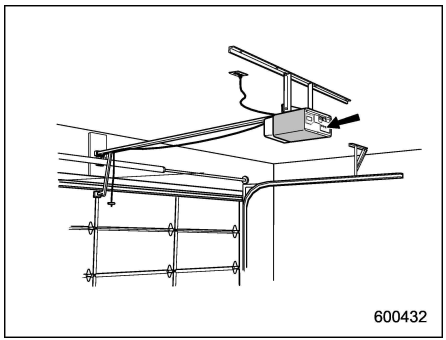

1. Locate the training button on the garage door opener motor head unit. The exact location and color of the button may vary by brand of garage door opener. If it is difficult to locate the training button, refer to your garage door opener's instruction manual.

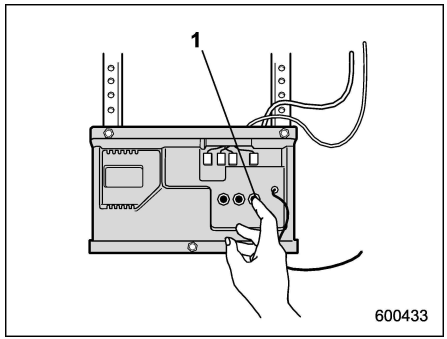

1) Training button

2. Press the training button on the garage door opener motor head unit (which activates the "training light" on the unit). Proceed to step 3 within 30 seconds.
3. Inside the vehicle, firmly press, hold for 2 seconds and release the HomeLink® button that was programmed in the previous section. Press and release the button a second time to complete the programming procedure.

NOTE

Some garage door openers may require you to do the above press-hold-release sequence a third time to complete the programming.

4. The garage door opener should now recognize the HomeLink® Wireless Control System and your garage door opener should activate when the HomeLink® button is pressed.

▽ Programming for entrance gates and garage door openers in Canada

1. Unplug the motor of the entrance gate or garage door opener from the outlet.

NOTE

If any of the HomeLink® buttons are already programmed for other devices, skip step 2 because it clears the memory of all three buttons.

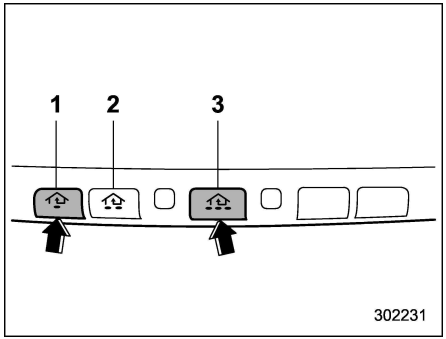

1) HomeLink® button 1
2) HomeLink® button 2
3) HomeLink® button 3

2. Press and hold the two outer HomeLink® buttons (button 1 and button 3) until the HomeLink® indicator light begins to flash (after approximately 20 seconds). Then release both buttons.

3. Hold the end of the entrance gate's/garage door opener's hand-held transmitter between 1 and 3 inches (25 and 76 mm) away from the HomeLink® button you wish to program.

4. Press and hold the desired HomeLink® button.

5. Press and release ("cycle") the hand-held transmitter button every 2 seconds until step 6 is complete.

6. When the indicator light flashes slowly and then rapidly after several seconds, release both buttons.

7. Plug the motor of the entrance gate/garage door opener to the outlet.

8. Test your entrance gate/garage door opener by pressing the programmed HomeLink® button.

▽ Operating the HomeLink® Wireless Control System

Once programmed, the HomeLink® Wireless Control System can be used to remote-control the devices to which its buttons are programmed. To activate a device, simply press the appropriate button. The indicator light illuminates, indicating that the signal is being transmitted.

▽ Programming other devices

To program other devices such as door locks, home lighting and security systems, contact HomeLink® at www.homelink.com or call 1-800-355-3515.

▽ Reprogramming a single HomeLink® button

1. Press and hold the HomeLink® button you wish to reprogram. DO NOT release the button until step 4 has been completed.

2. When the HomeLink® indicator light begins to flash slowly (after approximately

– CONTINUED –

20 seconds), position the hand-held transmitter of the device between 1 to 3 inches (25 to 76 mm) away from the HomeLink® button you wish to program.

3. Press and hold the hand-held transmitter button. The HomeLink® indicator light will flash, first slowly and then rapidly.

4. When the indicator light begins to flash rapidly, release both buttons.

The programming for the previous device is now erased and the new device can be operated by pressing the HomeLink® button.

▽ **Erasing HomeLink® button memory**

NOTE

- **Performing this procedure erases the memory of all the preprogrammed buttons simultaneously. The memory of individual buttons cannot be erased.**
- **It is recommended that upon the sale of the vehicle, the memory of all programmed HomeLink® buttons be erased for security purposes.**

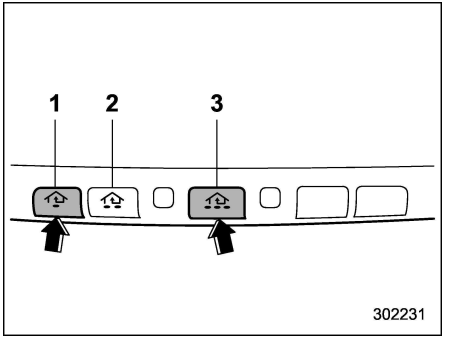

1) HomeLink® button 1
2) HomeLink® button 2
3) HomeLink® button 3

1. Press and hold the two outer buttons (button 1 and button 3) until the indicator light begins to flash (after approximately 20 seconds).
2. Release both buttons.

▽ **In case a problem occurs**

If you cannot activate a device using the corresponding HomeLink® button after programming, contact HomeLink® at www.homelink.com or call 1-800-355-3515 for assistance.

■ Auto-dimming mirror/compass with HomeLink® (models with EyeSight system)

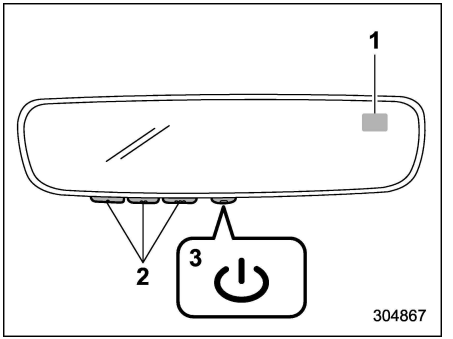

1) Display
2) HomeLink® buttons
3) Switch

During nighttime driving, the auto-dimming feature senses distracting glare from vehicle headlights behind you and automatically dims to eliminate the glare and help preserve your vision.

▼ To Operate the Auto-Dimming Feature

Press the "⏻" switch to turn the auto-dimming feature on/off. The auto-dimming feature is enabled when the switch's green LED indicator is on. The auto-dimming feature will default to on with each ignition cycle.

▼ To Operate the Compass Feature

1. To turn the compass feature on/off, press and hold the "⏻" switch for more than 3 seconds or until the display turns on/off. The compass feature will default to on with each ignition cycle.
2. If the display reads "C", slowly drive the vehicle in circles until compass is calibrated.

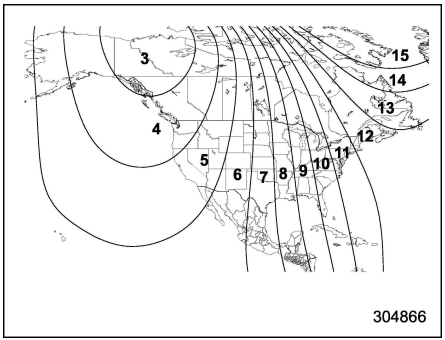

Compass calibration zones

3. To adjust for compass zone variance:
   (1) Find your current location and zone number on the map.
   (2) Press and hold the "⏻" switch for more than 6 seconds or until a zone number appears in the display.
   (3) Once the zone number appears in the display, toggle the "⏻" switch again until your current location zone number appears. After you stop pressing the switch, your new zone number will be saved. Within a few seconds, the display will show a compass direction.
4. If the vehicle's magnetics have changed or if the compass appears inaccurate, recalibrate the compass. Press and hold the "⏻" switch for more than 9 seconds or until a "C" appears in the display. Once a "C" appears in the display, slowly drive the vehicle in circles until compass is calibrated.

▼ HomeLink® Wireless Control System

The HomeLink® Wireless Control System provides a convenient way to replace up to three hand-held radiofrequency remotes used to activate devices such as gate operators, garage door openers, entry door locks, security systems, even home lighting. The below steps are generic programming instructions; for Genie and Sommer garage door openers please go directly to the HomeLink® website. Additional information and programming videos can be found at www.HomeLink.com and www.youtube.com/HomeLinkGentex.

⚠ CAUTION

- **Before programming HomeLink® to a garage door opener or gate operator, make sure that people and objects are out of the way of the device to prevent potential harm or damage.**
- **When programming a garage door opener, it is advised to park outside of the garage.**
- **Do not use HomeLink® with any garage door opener that lacks safety stop and reverse features as required by U.S. federal safety standards (this includes any garage door opener model manufactured before April 1, 1982). A garage door that cannot detect an object signaling the door to stop and reverse does not meet current U.S. federal safety standards.**
- **It is also recommended that a new**

– CONTINUED –

battery be placed in the hand-held remote (garage door opener remote) of the device for quicker and more accurate training.

- **Turn the ignition switch to the "ON" or "ACC" position before programming and/or operating HomeLink®.**
- **Keep the hand-held remote (garage door opener remote) of the device you are programming for use in other vehicles as well as for future HomeLink® programming. It is also suggested that upon the sale of the vehicle, the programmed HomeLink® buttons be erased for security purposes. Refer to "Erasing HomeLink® buttons" ☞3-79.**

▽ Programming a New HomeLink® button

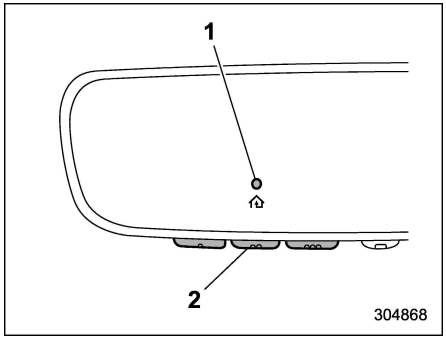

1) Indicator Light
2) HomeLink® buttons

1. Press and release the HomeLink® button that you would like to program. The HomeLink® indicator light will flash orange slowly (if not, refer to "Erasing HomeLink® buttons" ☞3-79.

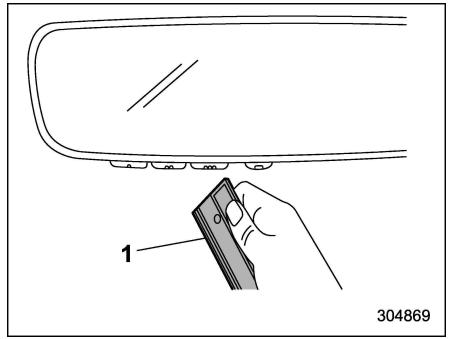

1) Garage door opener remote

2. Position the hand-held remote (garage door opener remote) 1 to 3 inches (2 to 8 cm) away from the HomeLink® button that you would like to program.

NOTE

Some hand-held remotes (garage door opener remotes) may actually train better at a distance of 6 to 12 inches (15 to 20 cm). Keep this in mind if you have difficulty with the programming process.

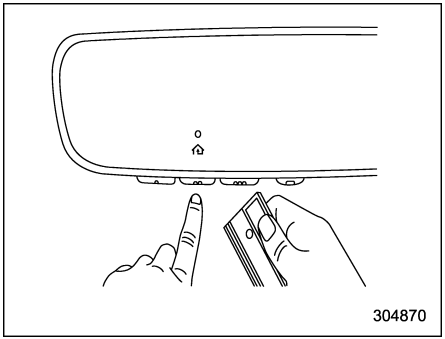

3. While the HomeLink® indicator light is flashing orange, press and hold the hand-held remote button. Continue pressing the hand-held remote button until the HomeLink® indicator light changes from orange to green. You may now release the hand-held remote button.

NOTE

Some devices may require you to replace this "Programming a New HomeLink® button" step 3 with procedures noted in the "Gate Operator / Canadian Programming" section. Refer to "Gate Operator / Canadian Programming" ☞3-78.

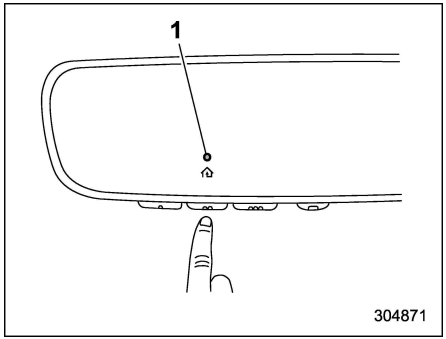

1) Indicator Light

4. Press the HomeLink® button that you would like to program and observe the indicator light.

- If the indicator light remains constant green, your device should operate when the HomeLink® button is pressed. At this point, if your device operates, programming is complete.
- If the indicator light rapidly flashes green, firmly press, hold for two seconds and release the HomeLink® button up to three times to complete the programming process. At this point if your device operates, programming is complete. If the device does not operate, continue with the next step of the programming instructions.

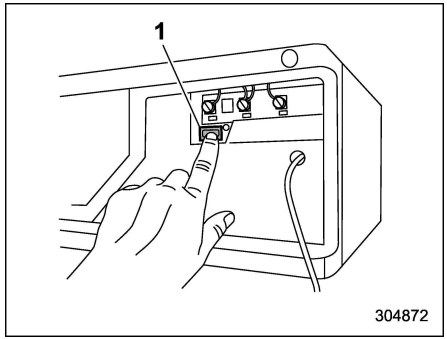

1) "Learn" button

5. At the garage door opener motor, (security gate motor, etc...) locate the "Learn", "Smart", or "Program" button. This can usually be found where the hanging antenna wire is attached to the motor-head unit (see the device's manual to identify this button). The name and color of the button may vary by manufacturer.

NOTE

A ladder and/or second person may simplify the following steps.

6. Firmly press and release the "Learn", "Smart", or "Program" button. You now have 30 seconds in which to complete step 7.

– CONTINUED –

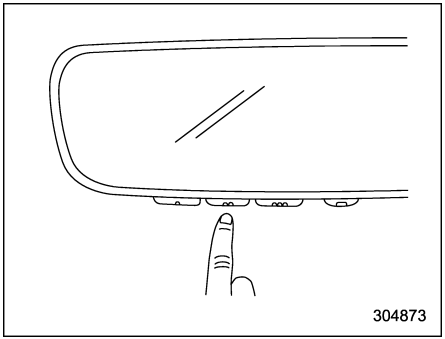

7. Return to the vehicle and firmly press, hold for 2 seconds and release the HomeLink® button up to three times. At this point programming is complete and your device should operate when the HomeLink® button is pressed and released.

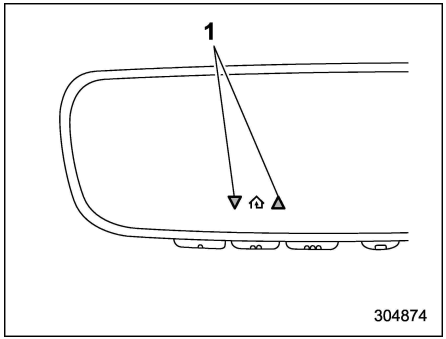

1) Status Indicators

8. If status indicator arrows appear next to the indicator light, please refer to "Garage Door Two-Way Communication" ☞3-79.

In the event that there are still programming difficulties or questions, additional HomeLink® information and programming videos can be found at www.HomeLink.com and www.youtube.com/HomeLinkGentex. For Genie and Sommer garage door openers please go directly to the HomeLink® website.

▽ Gate Operator / Canadian Programming

Canadian radio-frequency laws require transmitter remote signals to "time-out" (or quit) after several seconds of transmission, which may not be long enough for HomeLink® to pick up the signal during programming. Similar to this Canadian law, some U.S. gate operators are designed to "time-out" in the same manner. The indicator LED on the hand-held remote will go off when the device times out, indicating that it has finished transmitting.

If you live in Canada or you are having difficulties programming a gate operator or garage door opener by using the programming procedures, replace "Programming a New HomeLink® button" step 3 with the following:

While the HomeLink® indicator light is flashing orange, press and release ("cycle") your device's hand-held remote every two seconds until the HomeLink® indicator light changes from orange to green. You may now release the hand-held remote button.

NOTE

If programming a garage door opener or gate operator, it is advised to unplug

the device during the "cycling" process to prevent possible overheating.

Proceed with "Programming a New HomeLink® button" step 4 to complete.

▽ Using HomeLink®

To operate, simply press and release the programmed HomeLink® button. Activation will now occur for the trained device (i.e. garage door opener, gate operator, security system, entry door lock, home/office lighting, etc.). For convenience, the hand-held remote of the device may also be used at any time.

▽ Erasing HomeLink® buttons

To erase programming from the three buttons (individual buttons cannot be erased but can be "reprogrammed" as outlined below), follow the step noted:

Press and hold the two outer HomeLink® buttons for at least 10 seconds. The LED indicator will change from continuously lit to rapidly flashing. Release both buttons. Do not hold for longer than 20 seconds. HomeLink® is now ready to be programmed at any time beginning with "Programming a New HomeLink® button" - step 1.

▽ Reprogramming a Single HomeLink® button

To program a previously trained button, follow these steps:

1. Press and hold the desired HomeLink® button. DO NOT release the button.
2. The indicator light will begin to slowly flash orange after 20 seconds. The HomeLink® button can be released at this point. Proceed with "Programming a New HomeLink® button" - step 3.
3. If you do not complete the programming of a new device to the button, it will revert to the previously stored programming.

▽ Garage Door Two-Way Communication

HomeLink® has the capability of communicating with your garage door opener. HomeLink® can receive and display "closing" or "opening" status messages from compatible garage door opener systems. At any time, HomeLink® can also recall and display the last recorded status communicated by the garage door opener to indicate your garage door being "closed" or "opened".

HomeLink® has the capability of receiving this communication from the garage door opener at a range up to 820 feet (250 m). Range may be reduced by obstacles such as houses or trees. You may have to slow your vehicle speed to successfully receive the garage door opener communication.

▽ Programming Two-Way Communication

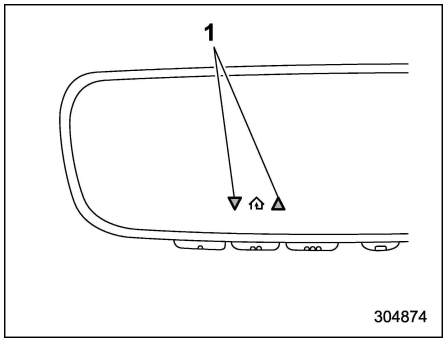

1) Status Indicators

Within 5 seconds after programming a new HomeLink® button, both of HomeLink's garage door status indicators will flash rapidly green indicating that the garage door two-way communication has been enabled. If your garage door status indicators flashed, two-way communication programming is complete.

If the garage door status indicators do not flash, additional HomeLink® information and programming videos can be found

– CONTINUED –

online at www.HomeLink.com and www.youtube.com/HomeLinkGentex.

▽ Using Two-Way Communication

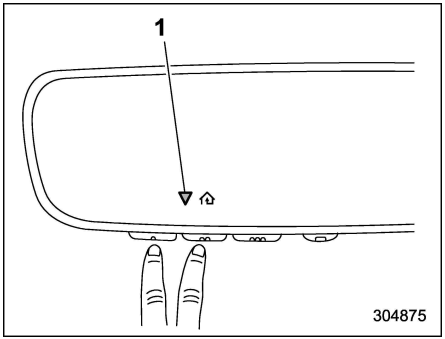

1) Status Indicator

Recall and display (at any time) the last recorded garage door status message communicated to HomeLink® by simultaneously pressing HomeLink® buttons 1 and 2 for 2 seconds. HomeLink® will display the last recorded status for 3 seconds.

If two-way communication programming is successful, HomeLink® will display the status of your garage door opener with arrow indicators (see below).

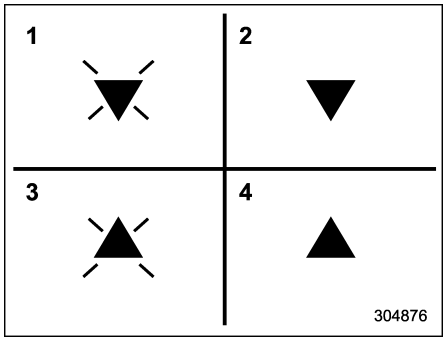

1) Garage Door Opener CLOSING (Blinking Orange)
2) Garage Door Opener CLOSED (Solid Green)
3) Garage Door Opener OPENING (Blinking Orange)
4) Garage Door Opener OPENED (Solid Green)

▽ Certification

In the event that there are still programming difficulties or questions, additional HomeLink® information and programming videos can be found at www.HomeLink.com, www.youtube.com/HomeLinkGentex, or by calling the toll-free HomeLink-hotline at 1-800-355-3515.

- **U.S.-spec. models**

⚠ CAUTION

FCC WARNING

Changes or modifications not expressly approved by the party responsible for compliance could void the user's authority to operate the equipment.

This device complies with part 15 of the FCC Rules. Operation is subject to the following two conditions: (1) This device may not cause harmful interference, and (2) this device must accept any interference received, including interference that may cause undesired operation.

- **Canada-spec. models**

NOTE

This device complies with Industry Canada's licence-exempt RSSs. Operation is subject to the following two conditions: (1) This device may not cause interference; and (2) This device must accept any interference, including interference that may cause undesired operation of the device.

REMARQUE

Le présent appareil est conforme aux CNR d'Industrie Canada applicables aux appareils radio exempts de licence. L'exploitation est autorisée aux deux conditions suivantes: (1) l'appareil ne doit pas produire de brouillage; (2) l'utilisateur de l'appareil doit accepter tout brouillage radioélectrique subi, même si le brouillage est susceptible d'en compromettre le fonctionnement.

203226

HomeLink® and the HomeLink® house are registered trademarks of Gentex Corporation.

WARNING

- **When programming the HomeLink® Wireless Control System, you may be operating a garage door opener or other device. Make sure that people and objects are out of the way of the garage door or other device to prevent potential harm or damage.**
- **Do not use the HomeLink® Wireless Control System with a garage door opener that lacks the safety stop and reverse feature as required by applicable safety standards. A garage door opener which cannot detect an object, signaling the door to stop and reverse, does not meet these safety standards. Using a garage door opener without these features increases risk of serious injury or death. For more information, consult the HomeLink® website at www.homelink.com or call 1-800-355-3515.**

■ Outside mirrors

▼ Convex mirror (passenger side)

WARNING

Objects look smaller in a convex mirror and farther away than when viewed in a flat mirror. Do not use the convex mirror to judge the distance of vehicles behind you when changing lanes. Use the inside mirror (or glance backwards) to determine the actual size and distance of objects that you view in convex mirror.

– CONTINUED –

▼ **Remote control mirror switch**

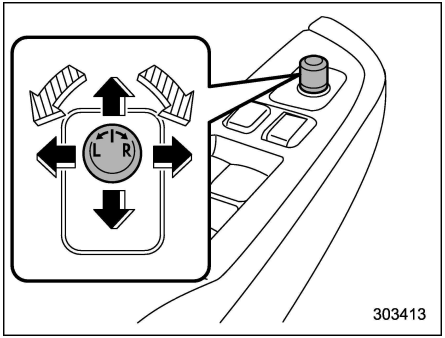

: Select side to adjust

: Direction control

The remote control mirrors operate only when the ignition switch is in the “ON” or “ACC” position.

1. Turn the control switch to the side that you want to adjust. “L” is for the left mirror, “R” is for the right mirror.
2. Move the control switch in the direction you want to move the mirror.
3. Return the control switch to the neutral position to prevent unintentional operation.

The mirrors can also be adjusted manually.

Tilt/telescopic steering wheel

⚠ WARNING

- **Do not adjust the steering wheel tilt/telescopic position while driving. This may cause loss of vehicle control and result in personal injury.**
- **If the lever cannot be raised to the fixed position, adjust the steering wheel again. It is dangerous to drive without locking the steering wheel. This may cause loss of vehicle control and result in personal injury.**

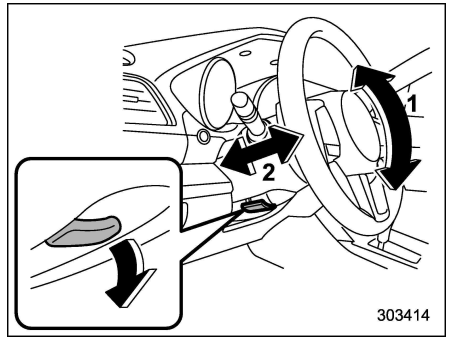

1) Tilt adjustment
2) Telescopic adjustment

1. Adjust the seat position. Refer to “Front seats” ☞1-2.
2. Pull the tilt/telescopic lock lever down.
3. Move the steering wheel to the desired level.
4. Pull the lever up to lock the steering wheel in place.
5. Make sure that the steering wheel is securely locked by moving it up and down, and forward and backward.

Horn

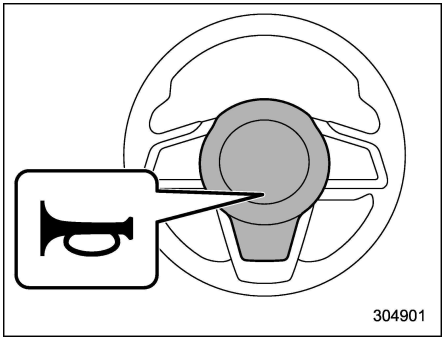

To sound the horn, push the horn pad.

Heated Steering Wheel system (if equipped)

The Heated Steering Wheel system warms the steering wheel at a constant temperature.

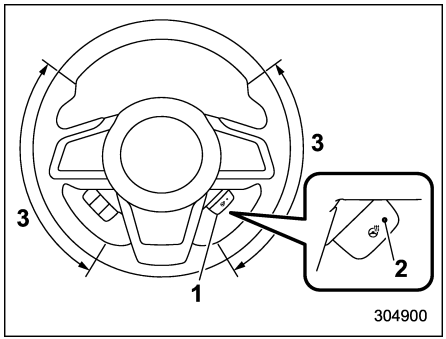

1) Heated Steering Wheel switch
2) Indicator light
3) Heated area

To turn on the Heated Steering Wheel system, pull the Heated Steering Wheel switch when the ignition switch is in the "ON" position. Then the steering wheel will be warmed and the indicator light on the switch will illuminate. To turn off the Heated Steering Wheel system, pull the switch again. Then the indicator light will turn off.

CAUTION

- **Use the Heated Steering Wheel system with the engine running. Otherwise, the battery voltage may drop below the permissible level and it may not be possible to start the engine.**
- **People with delicate skin may suffer slight burns even at low temperatures if they use the Heated Steering Wheel for a long period of time. When using the Heated Steering Wheel, always be sure to warn the persons concerned.**
- **Do not cover the Heated Steering Wheel with an object such as a steering wheel cover. Doing so may cause the Heated Steering Wheel to overheat.**

NOTE

- **If the surface temperature of the steering wheel is approximately above 104°F (40°C) when the Heated Steering Wheel system is turned on, the system will not heat the steering wheel. Then, the indicator light will continue to illuminate.**
- **The Heated Steering Wheel system**

– CONTINUED –

will automatically turn off approximately 30 minutes after the system has been turned on.

Ventilator control 4-2
Center ventilators 4-2
Side ventilators 4-2
Rear ventilators (if equipped) 4-2
Climate control panel 4-3
Type A 4-3
Type B 4-4
Automatic climate control system (type B) 4-5
Sensors 4-5
Manual climate control 4-6
Airflow mode selection 4-6
Temperature control 4-7
Fan speed control 4-8
Air conditioner control 4-8
Air inlet selection 4-8
Defrosting 4-9
Operating tips for heater and air conditioner 4-9
Cleaning ventilator grille 4-9
Efficient cooling after parking in direct sunlight 4-9
Lubrication oil circulation in the refrigerant circuit 4-9
Checking air conditioning system before summer season 4-9
Cooling and dehumidifying in high humidity and low temperature weather condition 4-9
Air conditioner compressor shut-off when engine is heavily loaded 4-10
Refrigerant for your climate control system 4-10
Air filtration system 4-10
Replacing the cabin air filter 4-10

Ventilator control

■ Center ventilators

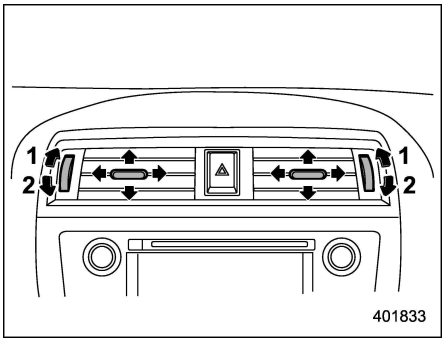

1) Open
2) Close

Move the tab to adjust the flow direction.

To open the ventilator, turn the center grille open/close wheel upward to the "≋" position.

To close it, turn the wheel downward to the "⊠" position.

■ Side ventilators

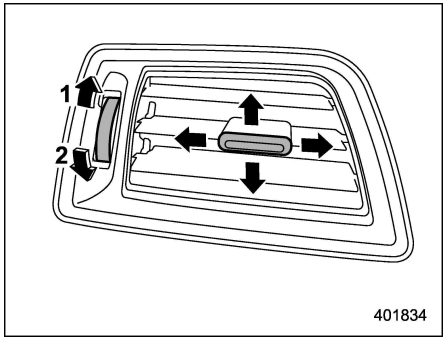

1) Open
2) Close

Move the tab to adjust the flow direction.

To open the ventilator, turn the side grille open/close wheel upward to the "≋" position.

To close it, turn the wheel downward to the "⊠" position.

■ Rear ventilators (if equipped)

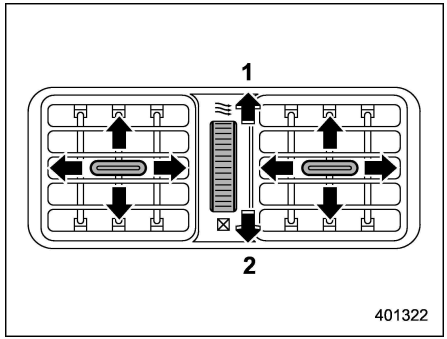

1) Open
2) Close

Move the tab to adjust the flow direction.

To open the ventilator, turn the rear grille open/close wheel upward to the "≋" position.

To close it, turn the wheel downward to the "⊠" position.

Climate control panel

■ Type A

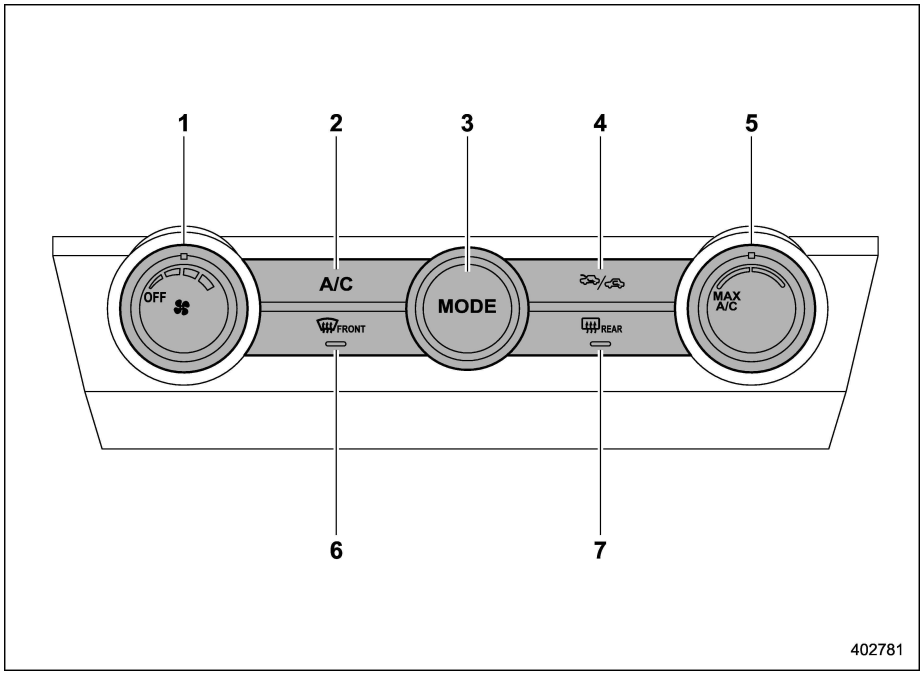

1) Fan speed control dial (Refer to “Fan speed control” ☞4-8.)
2) “A/C” button (Refer to “Air conditioner control” ☞4-8.)
3) Airflow mode selection button (Refer to “Airflow mode selection” ☞4-6.)
4) Air inlet selection button (Refer to “Air inlet selection” ☞4-8.)
5) Temperature control dial (Refer to “Temperature control” ☞4-7 and “MAX A/C mode” ☞4-7.)
6) Defroster button (Refer to “Airflow mode selection” ☞4-6 and “Defrosting” ☞4-9.)
7) Rear window defogger button (Refer to “Defogger and deicer” ☞3-61.)

– CONTINUED –

■ Type B

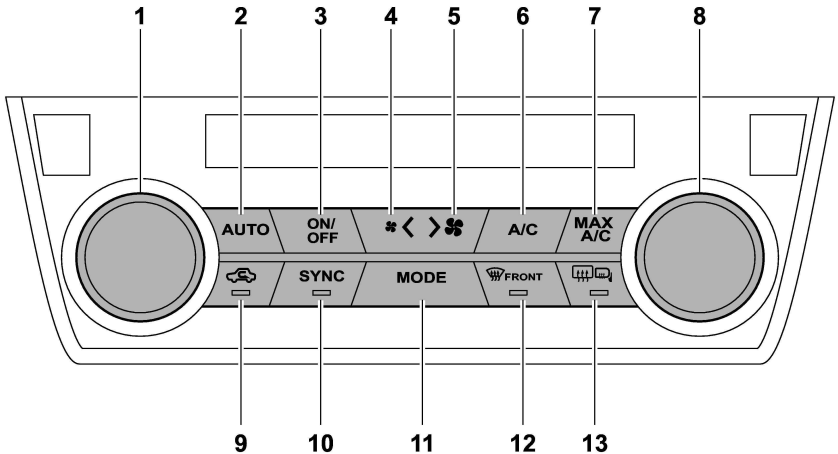

402718

1) Temperature control dial (Refer to “Temperature control” ☞4-7.)
2) “AUTO” button (Refer to “Automatic climate control system (type B)” ☞4-5.)
3) “ON/OFF” button (Refer to “Automatic climate control system (type B)” ☞4-5.)
4) Fan speed control button (for decreasing the fan speed) (Refer to “Fan speed control” ☞4-8.)
5) Fan speed control button (for increasing the fan speed) (Refer to “Fan speed control” ☞4-8.)
6) “A/C” button (Refer to “Air conditioner control” ☞4-8.)
7) “MAX A/C” button (Refer to “MAX A/C mode” ☞4-7.)
8) Temperature control dial (Refer to “Temperature control” ☞4-7.)
9) Air inlet selection button (Refer to “Air inlet selection” ☞4-8.)
10) “SYNC” button (Refer to “SYNC mode (type B)” ☞4-8.)
11) Airflow mode selection button (Refer to “Airflow mode selection” ☞4-6.)
12) Defroster button (Refer to “Airflow mode selection” ☞4-6 and “Defrosting” ☞4-9.)
13) Rear window and outside mirror defogger button (Refer to “Defogger and deicer” ☞3-61.)

Automatic climate control system (type B)

NOTE

- **Operate the automatic climate control system when the engine is running.**
- **The blower fan rotates at a low speed when the engine coolant temperature is low.**
- **For efficient defogging or dehumidifying in cold weather, press the "A/C" button.**

When the automatic climate control mode is selected, the following items are automatically controlled.

- Outlet air temperature
- Fan speed
- Airflow distribution
- Air inlet control
- Air conditioner compressor operation

To activate this mode, perform the following procedure.

1. Set the preferred temperature using the temperature control dials.
2. Press the "AUTO" button. The FULL AUTO mode is selected and the "FULL AUTO" indicator light on the display illuminates.

NOTE

If you operate any of the buttons on the control panel other than the "ON/OFF" button, rear window and outside mirror defogger button or temperature control dials during FULL AUTO mode operation, the "FULL" indicator light on the control panel will turn off and the "AUTO" indicator light will remain illuminated. You can then manually control the system as desired. To change the system back to the FULL AUTO mode, press the "AUTO" button.

To turn off the climate control system, press the "ON/OFF" button. The air inlet selection is then automatically switched to the outside air mode.

■ Sensors

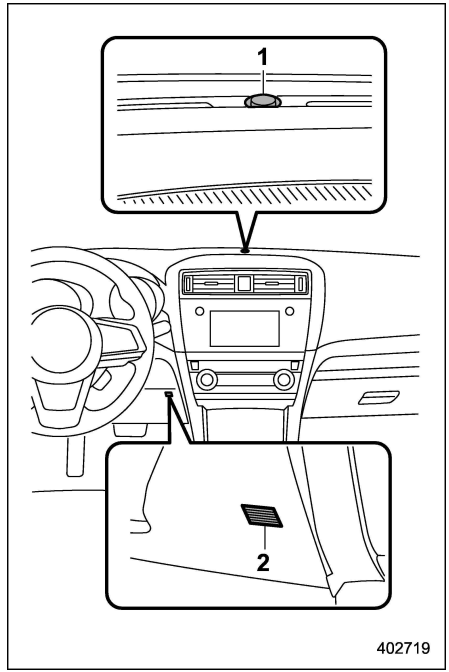

1) Solar sensor
2) Interior air temperature sensor

The automatic climate control system employs several sensors. These sensors are delicate. If they are treated incorrectly

– CONTINUED –

and become damaged, the system may not be able to control the interior temperature correctly. To avoid damaging the sensors, observe the following precautions:

– Do not subject the sensors to impact.
– Keep water away from the sensors.
– Do not cover the sensors.

The sensors are located as follows:

– Solar sensor: beside the speaker grille on the dashboard
– Interior air temperature sensor: on the side of the driver-side part of the center panel
– Outside temperature sensor: behind front grille.

Manual climate control

■ Airflow mode selection

Select the preferred airflow mode by pressing the airflow mode selection button or defroster button.

Airflow modes are as follows.

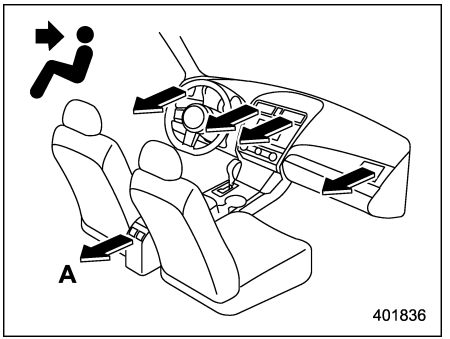

A) Models with rear ventilators

Ventilation: Instrument panel outlets

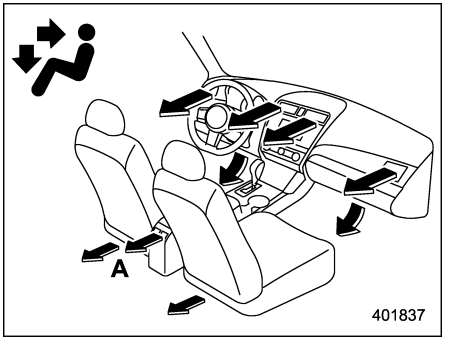

A) Models with rear ventilators

Bi-level: Instrument panel outlets and the foot outlets

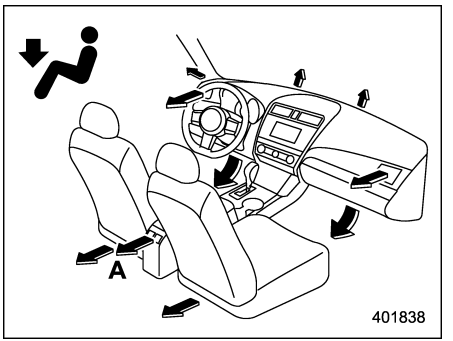

A) Models with rear ventilators

Heat: Foot outlets, both side outlets of the

instrument panel and some through windshield defroster outlets (A small amount of air flows to the windshield and both side windows to prevent fogging.)

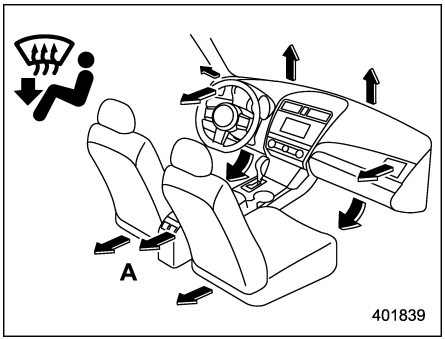

A) Models with rear ventilators

Heat-def: Windshield defroster outlets, foot outlets and both side outlets of the instrument panel

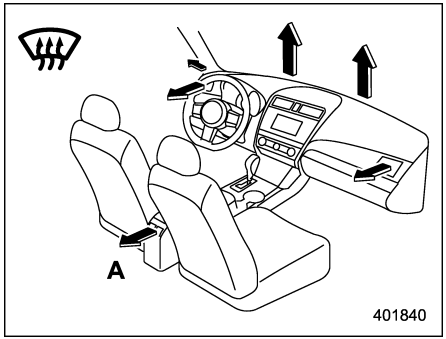

A) Models with rear ventilators

Defrost: Windshield defroster outlets and both side outlets of the instrument panel

NOTE

- **When the "" mode or "" mode is selected, the air conditioner compressor automatically operates to more quickly defog the windshield. At the same time, the air inlet selection is automatically set to the outside air mode.**

In this state:

– The air conditioner indicator light does not illuminate.

– You cannot stop the air conditioner compressor by pressing the air conditioner button.

■ Temperature control

Turn the temperature control dial over a range from the blue side (cool) to red side (warm) to regulate the temperature of airflow from the air outlets.

▼ MAX A/C mode

Perform the following operation to select the MAX A/C mode.

- Turn the temperature control dial to the "MAX A/C" position (models with type A climate control system).
- Press the "MAX A/C" button (models with type B climate control system).

When this mode is selected, some of the settings will be changed as follows.

Type A climate control system:

- The air inlet selection mode will be changed to the ON position (recirculation).
- The air conditioner will turn on.

Type B climate control system:

- The temperature setting will be changed to the maximum cooling mode.
- The fan speed setting will be changed to the maximum speed.
- The airflow mode setting will be changed to the " " (ventilation) mode.
- The air inlet selection mode will be changed to the ON position (recirculation).

– CONTINUED –

- The air conditioner will turn on.

While the MAX A/C mode is selected, performing the following operation returns the system to the setting that had been selected before the MAX A/C mode is selected.

- Turn the temperature control dial to a position other than “MAX A/C” position (models with type A climate control system).
- Press the “MAX A/C” button again (models with type B climate control system).

▼ SYNC mode (type B)

When the SYNC mode is turned on, both the driver’s and passenger’s side temperatures are synchronized using the driver’s side temperature control dial.

Press the SYNC button to turn on the SYNC mode. The SYNC button indicator will illuminate.

Press the SYNC button again or turn the passenger’s side temperature control dial to cancel the SYNC mode. The SYNC button indicator will not illuminate. In this case, temperature control on the driver’s side and passenger’s side is separated. The temperature will be controlled individually using the driver’s and passenger’s temperature control dials.

■ Fan speed control

The fan operates only when the ignition switch is in the “ON” position. Select the preferred fan speed by turning the fan speed control dial (type A), or by pressing the fan speed control buttons (type B).

■ Air conditioner control

The air conditioner operates only when the engine is running.

Press the air conditioner button while the fan is in operation to turn on the air conditioner. When the air conditioner is on, the “A/C” indicator light illuminates.

To turn off the air conditioner, press the button again. The indicator light will turn off.

NOTE

For efficient defogging or dehumidifying in cold weather, turn on the air conditioner. However, if the ambient temperature decreases to approximately 32°F (0°C), the air conditioner and dehumidification system may not work properly.

■ Air inlet selection

Select the air inlet by pressing the air inlet selection button.

ON position (recirculation): Interior air is recirculated inside the vehicle. Press the air inlet selection button to the ON position for fast cooling with the air conditioner or when driving on a dusty road. When the ON position is selected, the “” indicator light on the information display (type A)/the indicator light on the air inlet selection button (type B) illuminates.

OFF position (outside air): Outside air is drawn into the passenger compartment. Press the air inlet selection button to the OFF position when the interior has cooled to a comfortable temperature and the road is no longer dusty. The indicator light will turn off.

⚠ WARNING

Continued operation in the ON position may fog up the windows. Switch to the OFF position as soon as the outside dusty condition clears.

Defrosting

Select the desired "" mode or "" mode to defrost or dehumidify the windshield and front door windows by performing the following procedures.

- To select the "" mode, press the defroster button.
- To select the "" mode, press the airflow mode selection button and select the "" mode.

NOTE

- **When the "" mode or "" mode is selected, the air conditioner compressor automatically operates to more quickly defog the windshield. (The air conditioner indicator light does not illuminate in this case.) At the same time, the air inlet selection is automatically set to the outside air mode. For details, refer to "Airflow mode selection" ☞4-6.**
- **If the defroster button is pressed while the "" mode is selected, it will return to the previous mode before selecting the "" mode.**

Operating tips for heater and air conditioner

■ Cleaning ventilator grille

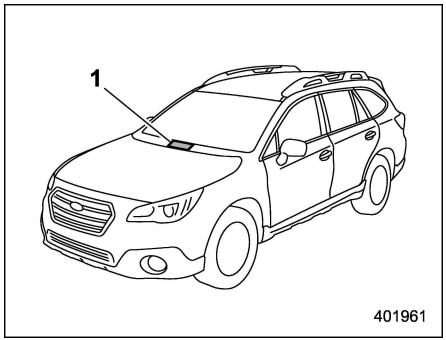

1) Front ventilator inlet grille

Always keep the front ventilator inlet grille free of snow, leaves, or other obstructions to ensure efficient heating and defrosting. Since the condenser is located in front of the radiator, this area should be kept clean because cooling performance is impaired by any accumulation of insects and leaves on the condenser.

■ Efficient cooling after parking in direct sunlight

After parking in direct sunlight, drive with the windows open for a few minutes to allow outside air to circulate into the heated interior. This results in quicker cooling by the air conditioner. Keep the windows closed during the operation of the air conditioner for maximum cooling efficiency.

■ Lubrication oil circulation in the refrigerant circuit

Operate the air conditioner compressor at a low engine speed (at idle or low driving speeds) a few minutes each month during the off-season to circulate its oil.

■ Checking air conditioning system before summer season

Check the air conditioner unit for refrigerant leaks, hose conditions, and proper operation each spring. Have the air conditioning system checked by your SUBARU dealer.

■ Cooling and dehumidifying in high humidity and low temperature weather condition

Under certain weather conditions (high relative humidity, low temperatures, etc.) a small amount of water vapor emission from the air outlets may be noticed. This condition is normal and does not indicate

– CONTINUED –

any problem with the air conditioning system.

■ Air conditioner compressor shut-off when engine is heavily loaded

To improve acceleration and gas mileage, the air conditioner compressor is designed to temporarily shut off during air conditioner operation whenever the accelerator is fully depressed such as during rapid acceleration or when driving on a steep upgrade.

■ Refrigerant for your climate control system

Your air conditioner uses ozone friendly refrigerant HFO-1234yf. Therefore, the method of adding, changing or checking the refrigerant is different from the method for CFC12 (freon) or HFC134a. Consult your SUBARU dealer for service. Repairs needed as a result of using the wrong refrigerant are not covered under warranty.

Air filtration system

Your vehicle's air conditioning system is equipped with an air filtration system. Replace the cabin air filter according to the replacement schedule found in the "Warranty and Maintenance Booklet". This schedule should be followed to maintain the filter's dust collection ability. Under extremely dusty conditions, the filter should be replaced more frequently. Have your filter checked or replaced by your SUBARU dealer. For replacement, use only a genuine SUBARU air filter kit.

⚠ CAUTION

Contact your SUBARU dealer if the following occurs, even if it is not yet time to change the filter.

- **Reduction of the airflow through the vents.**
- **Windshield gets easily fogged or misted.**

NOTE

The filter can influence the air conditioning, heating and defroster performance if not properly maintained.

■ Replacing the cabin air filter

1. Remove the glove box.
   (1) Open the glove box.

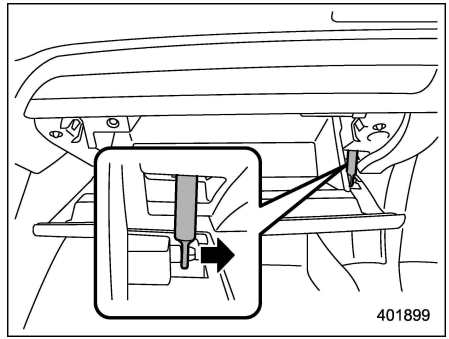

   (2) Remove the damper shaft from the glove box.

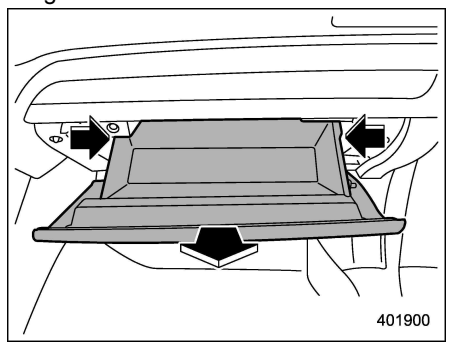

(3) Push both sides of the glove box inward to unlock the stoppers and then pull down the glove box as far as it will go.

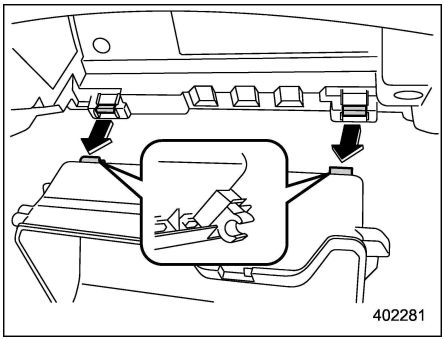

(4) Pull out the glove box horizontally and remove the hinge portion. When doing this, be careful not to damage the hinge.

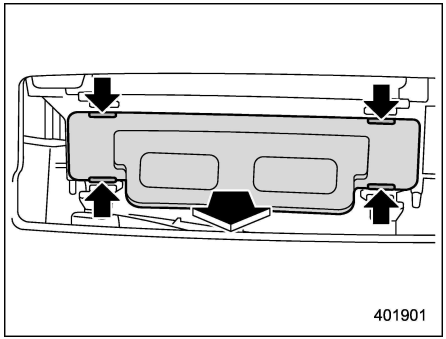

2. Remove the cover of the cabin air filter.

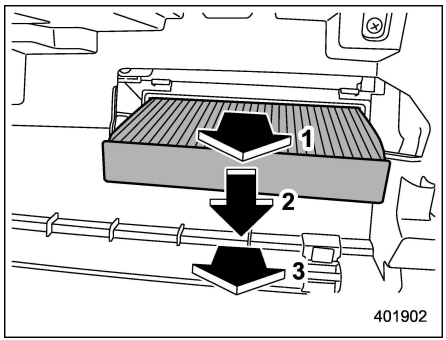

3. Remove the cabin air filter according to the following procedure in order to prevent dust on the air cleaner from falling to the inside of its housing.
   (1) Pull the air filter approximately 3.9 inches (10 cm) first.
   (2) Gently push the near side of the air filter down.
   (3) Pull out the air filter.

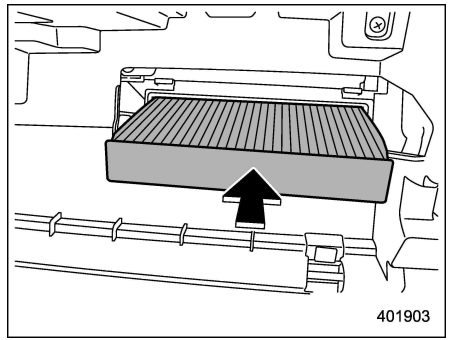

4. Replace the filter with a new one.
5. Reinstall the cover.

⚠ CAUTION

The arrow mark on the filter must point UP.

– CONTINUED –

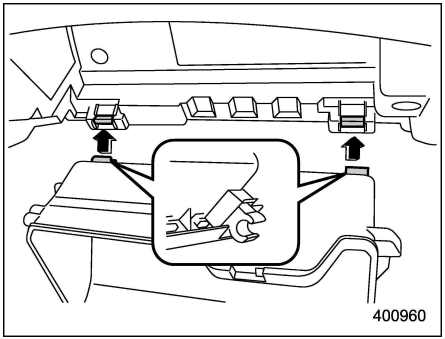

6. Reinstall the glove box, and connect the damper shaft.
7. Close the glove box.

Antenna 5-2
Printed antenna 5-2
Roof antenna (if equipped) 5-2

Audio set 5-2

Antenna

■ Printed antenna

⚠ CAUTION

Do not use sharp instruments or window cleaner containing abrasives to clean the inner surface of the window on which the antenna is printed. Doing so may damage the antenna printed on the window.

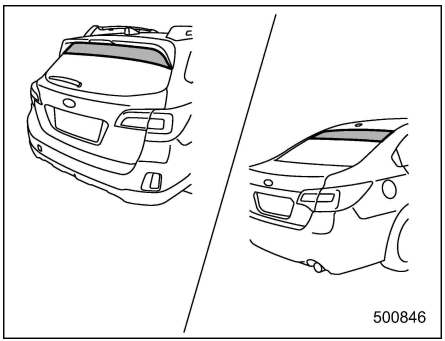

The antenna is printed on the inner surface of the rear window glass.

NOTE

Antenna performance will deteriorate significantly if you apply tinting film or any other material over the antenna portion of the rear window glass.

■ Roof antenna (if equipped)

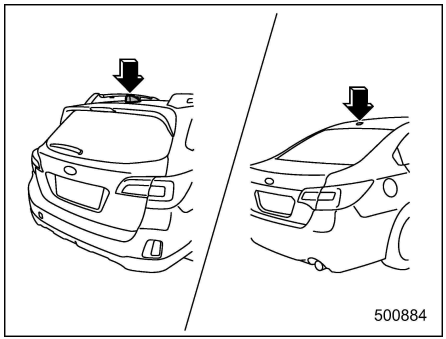

The satellite radio antenna and telematics antenna (if equipped) are installed in the center of the roof at the rear.

Audio set

If your vehicle is equipped with a genuine SUBARU navigation system or audio system, refer to the separate navigation/audio Owner's Manual for details.

Interior light 6-2
Dome light 6-2
Map light 6-2
Cargo area light (Outback) 6-3
OFF delay timer 6-4
Sun visors 6-4
Vanity mirror with light 6-5
Storage compartment 6-6
Glove box 6-6
Center console 6-6
Overhead console 6-7
Pocket 6-7
Cup holder 6-8
Front passenger's cup holder 6-8
Rear passenger's cup holder 6-8
Bottle holders 6-9
Accessory power outlets 6-9
USB power supply (if equipped) 6-11
Ashtray (if equipped) 6-13
Coat hook 6-13
Shopping bag hook 6-14
Legacy 6-14
Outback 6-15
Convenient grip (Outback) 6-15
Floor mat 6-16
Cargo area cover (Outback – if equipped) 6-16
Using the cover 6-16
To install the front cover 6-17
To remove the front cover 6-18
To remove the cover housing 6-18
Stowage of the cargo area cover 6-18
To take out the stowed cover housing 6-19
To install the cover housing 6-20
Convenient tie-down hooks (Outback) 6-20
Under-floor storage compartment 6-21

Interior light

⚠ CAUTION

When leaving your vehicle, make sure the lights are turned off to avoid battery discharge.

■ Dome light

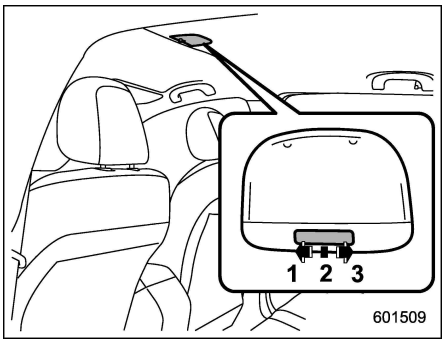

1) ON
2) DOOR
3) OFF

The dome light switch has the following positions:

ON: The light remains on continuously.
OFF: The light remains off.

DOOR: The dome light illuminates automatically when any of the doors (for Outback, including the rear gate) is opened. Several seconds after all of the doors (including the rear gate) are closed, the dome light gradually turns off. For details, refer to “OFF delay timer” ☞6-4.

■ Map light

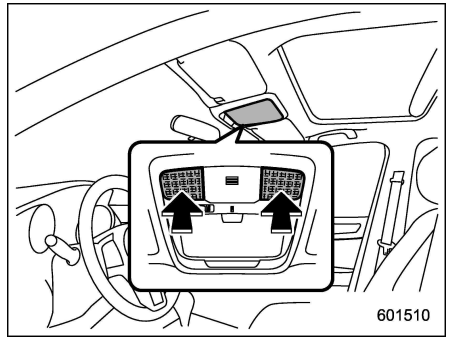

To turn on the map light, press the lens.
To turn it off, press the lens again.

▼ Door interlock switch

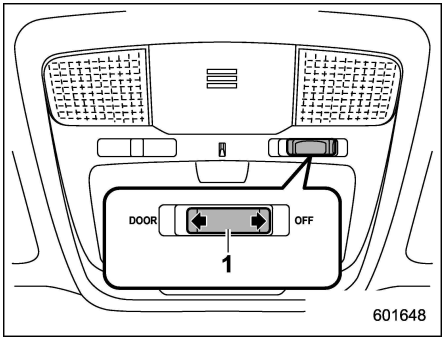

Models with SUBARU STARLINK*
1) Door interlock switch

*: For details about the SUBARU STARLINK (U.S.-spec. models only, if equipped), refer to the Owner's Manual supplement for the SUBARU STARLINK.

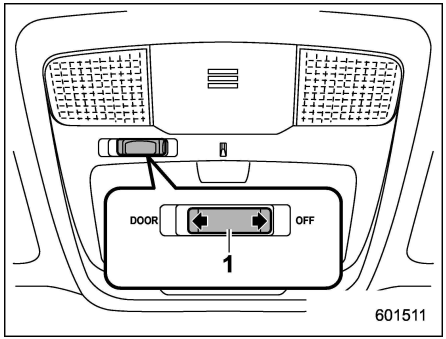

Models without SUBARU STARLINK
1) Door interlock switch

The door interlock switch has the following positions.

OFF: The map lights do not illuminate automatically in conjunction with a door opening. But, the lights can be turned on manually by pressing the map light switches.

DOOR: The map lights illuminate automatically when any of the doors (other than the rear gate or trunk lid) is opened even while the map light switches are in the OFF position. Several seconds after all of the doors (other than the rear gate or trunk lid) are closed, the map lights gradually turn off. For details, refer to "OFF delay timer" ☞6-4.

■ Cargo area light (Outback)

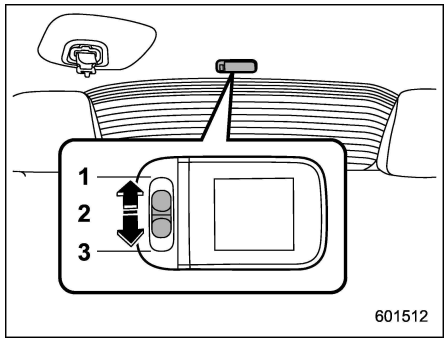

1) DOOR
2) OFF
3) ON

The cargo area light switch has the following positions.

DOOR: The light illuminates only when the rear gate is opened. The light gradually turns off several seconds after the rear gate is closed. For derails, refer to "OFF delay timer" ☞6-4.

OFF: The light remains off.

ON: The light remains on continuously.

– CONTINUED –

■ OFF delay timer

The following lights have an automatic illumination function.

- dome light
- map light
- Trunk light (Legacy)
- cargo area light (Outback)

After being illuminated automatically, these lights remain on for a certain period of time and then gradually turn off under the following conditions.

- after the ignition switch is turned to the “LOCK”/“OFF” position
- after any doors or the rear gate (Outback) is closed (dome light)
- after all doors are closed (map light)
- after the rear gate is closed (cargo area light)
- after the doors are unlocked using the keyless access function (if equipped) (dome light and map light)
- after the doors are unlocked using the remote keyless entry system (dome light and map light)
- when approaching with the access key fob (if equipped) (dome light and map light)

While the lights are illuminated, if any of the following operations is performed, the lights turn off immediately.

- The ignition switch is turned from the “LOCK”/“OFF” position to the “ACC” or “ON” position.
- All doors and the rear gate (Outback) are locked using the keyless access function (if equipped).
- All doors and the rear gate (Outback) are locked using the remote keyless entry system.

The setting for the period of time in which the lights remain on (OFF delay timer) can be changed by a SUBARU dealer. Contact your SUBARU dealer for details. Also, the setting can be changed by operating the multi information display. For details, refer to“Interior Light” ☞3-44.

Sun visors

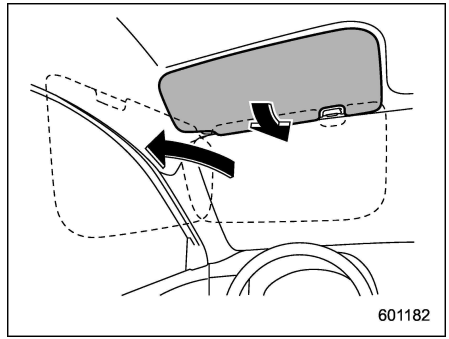

To block out glare, swing down the visors.

To use the sun visor at a side window, swing it down and move it sideways.

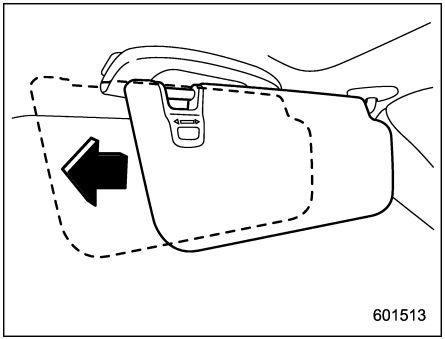

With the sun visor positioned over the side window, you can slide the sun visor toward the rear to prevent glare through the gap between the sun visor and center pillar. To slide the sun visor, pull it toward the rear of the vehicle. When you have finished sliding it, push it toward the front of the vehicle.

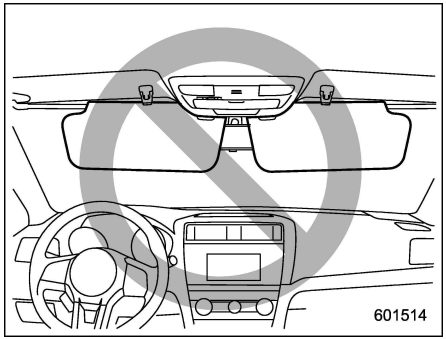

CAUTION

Do not slide the sun visor over the windshield. The slided sun visor would obstruct your view of the rearview mirror.

■ Vanity mirror with light

CAUTION

Keep the vanity mirror cover closed while the car is being driven to avoid being blinded by glare.

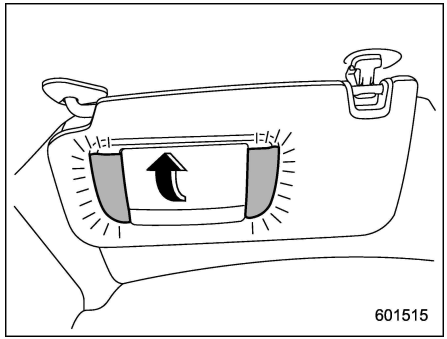

To use the vanity mirror, swing down the sun visor and open the vanity mirror cover. The lights beside the vanity mirror illuminate when the mirror cover is opened.

NOTE

Use of the vanity mirror light for a long period of time while the engine is not running can cause battery discharge.

Storage compartment

⚠ CAUTION

- **Always keep the storage compartment closed while driving to reduce the risk of injury in the event of sudden stops or an accident.**
- **Do not store the following items in the storage compartment. Otherwise, it may cause a fire or accident.**
  - **Spray cans, containers with flammable or corrosive liquids or any other dangerous items.**
  - **Plastic or other heat-vulnerable or flammable articles such as a lighter.**

■ Glove box

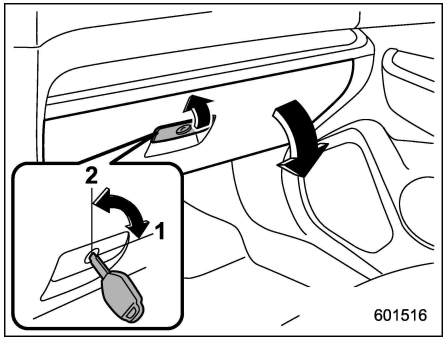

1) Lock
2) Unlock

To open the glove box, pull the handle. To close it, push the lid firmly upward.

To lock the glove box, insert the key and turn it clockwise. To unlock the glove box, insert the key and turn it counterclockwise.

For models with “keyless access with push-button start system”, use the emergency key to lock or unlock the glove box.

NOTE

The emergency key is directional. If the key cannot be inserted, change the direction that the grooved side is facing and insert it again.

■ Center console

The center console box provides a storage space.

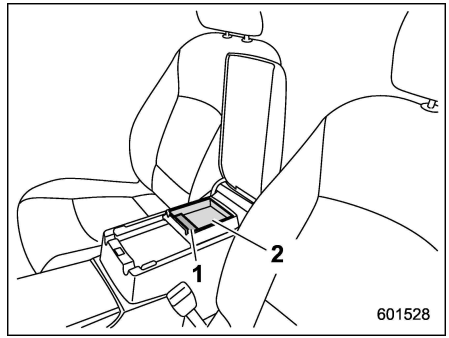

1) Coin tray
2) Accessory tray

The lid located inside the center console can be used as a coin tray or an accessory tray for small items.

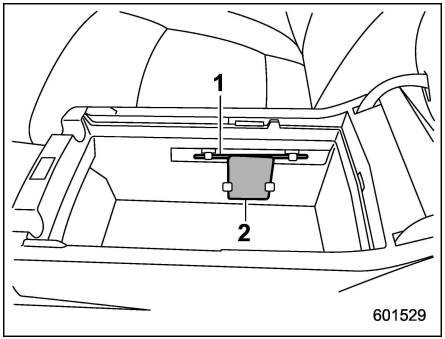

1) Pen holder
2) Card holder

When the lid inside the center console is removed, you can use the center console as a pen holder or a card holder.

The top of the console can be used as an armrest.

■ Overhead console

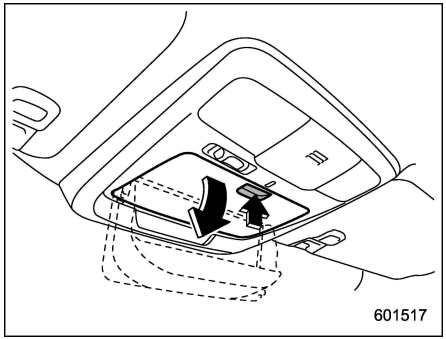

To open the console, push on the lid lightly and it will automatically open.

⚠ CAUTION

Before operating this vehicle, ensure that the overhead console is closed.

■ Pocket

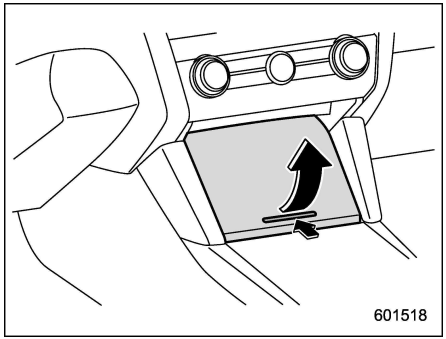

⚠ CAUTION

Do not use the pocket as an ashtray or leave a lighted cigarette in the pocket. This could cause a fire.

To use the pocket, push on the lid lightly and it will automatically open.

Cup holder

CAUTION

Take care to avoid spills. Beverages, if hot, might burn you and/or your passengers. Spilled beverages may also damage upholstery, carpets or audio equipment.

■ Front passenger's cup holder

CAUTION

- **Do not pick up a cup from the cup holder or put a cup in the holder while you are driving, as this may distract you and lead to an accident.**
- **Take care not to spill a beverage on the select lever or any switch(es) in the adjacent area. If the beverage is spilled, it may cause a malfunction of the select lever and/or switch(es).**

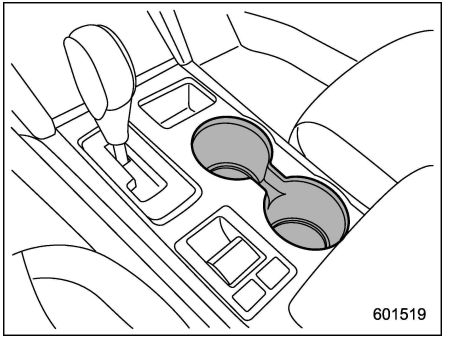

The dual cup holder is built into the center console.

■ Rear passenger's cup holder

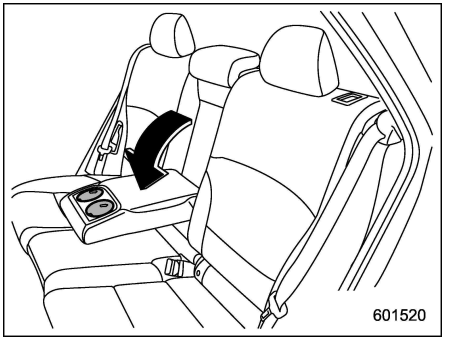

A dual cup holder is built into the armrest.

CAUTION

When a cup containing a beverage is in the cup holder, do not fold down or recline any seat. Otherwise, the beverage could spill while driving and, if the beverage is hot, it could burn you and/or your passengers.

Bottle holders

CAUTION

- **Do not pick up a bottle from the bottle holder or put a bottle in the holder while you are driving, as this may distract you and lead to an accident.**
- **When placing a beverage in a bottle holder, make sure it is capped. Otherwise, the beverage could spill when opening/closing the door or while driving and, if the beverage is hot, it could burn you and/or your passengers.**

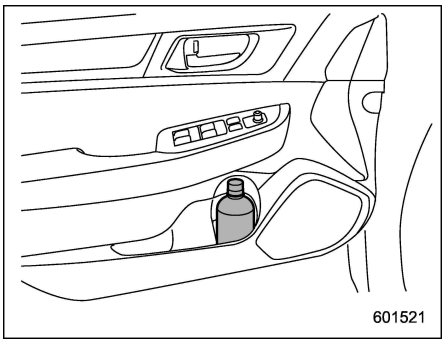

The bottle holder equipped on each door trim can be used to hold beverage bottles and other items.

Accessory power outlets

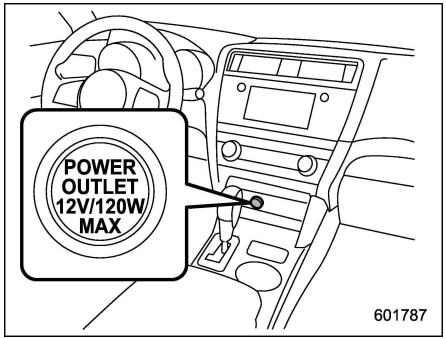

Power outlet below the climate control

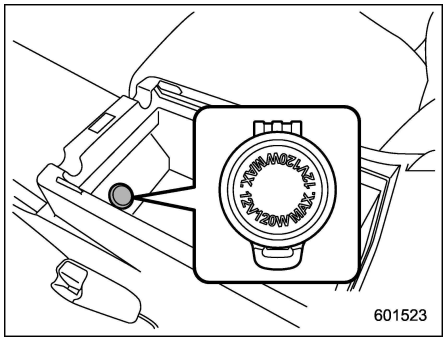

Power outlet in the center console (if equipped)

– CONTINUED –

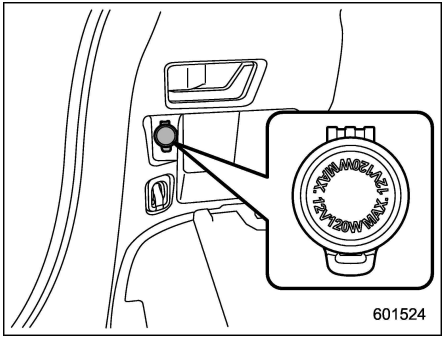

Power outlet in the cargo area (Outback)

Accessory power outlets are provided below the climate control, in the center console and in the cargo area. Electrical power (12V DC) from the battery is available at any of the outlets when the ignition switch is in either the “ACC” or “ON” position.

You can use an in-vehicle electrical appliance by connecting it to an outlet.

The maximum power rating of an appliance that can be connected is **120W**. Do not use an appliance which exceeds the indicated wattage for each outlet.

When using appliances connected to two or more outlets simultaneously, the total power consumed by them must not exceed 120W.

CAUTION

- **Do not attempt to use a cigarette lighter in the accessory power outlet.**
- **Do not place any foreign objects, especially metal ones such as coins or aluminum foil, into the accessory power outlet. That could cause a short circuit. Always put the cap on the accessory power outlet when it is not in use.**
- **Use only electrical appliances which are designed for 12V DC.**

  The maximum power rating of an appliance that can be connected is 120W. Do not use an appliance which exceeds the indicated wattage for each outlet.

  When using appliances connected to two or more outlets simultaneously, the total power consumed by them must not exceed 120W. Overloading the accessory power outlet can cause a short circuit. Do not use double adapters or more than one electrical appliance.
- **If the plug on your electric appliance is either too loose or too tight for the accessory power outlet, this can result in a poor contact or cause the plug to get stuck. Only use plugs that fit properly.**
- **Use of an electric appliance in the accessory power outlet for a long period of time while the engine is not running can cause battery discharge.**
- **Before driving your vehicle, make sure that the plug and the cord on your electrical appliance will not interfere with your shifting gears and operating the accelerator and brake pedals. If they do, do not use the electrical appliance while driving.**

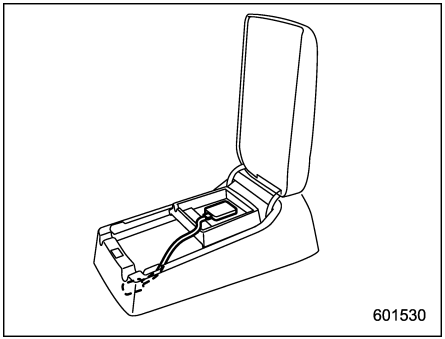

Upper compartment

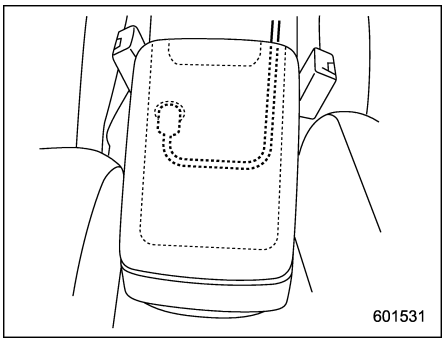

Lower compartment

NOTE

When the lid of the center console is closed, a gap remains between the center console and the lid to allow the power outlet in the center console to be used. Pass the cord of the electrical appliance through this gap.

USB power supply (if equipped)

⚠ CAUTION

- **The specification of a USB terminal that can be used is the A-type. If a different specification of terminal is connected, power supply or charging may not be possible, or the device may malfunction.**
- **There is no guarantee even when a connected device malfunctions or data is damaged. The connection of a device shall be performed at your responsibility.**
- **To avoid an electric shock or a malfunction, observe the following precautions.**
  - **Do not connect a USB hub.**
  - **Do not insert any metal or other foreign object into the USB terminal.**
  - **Do not spill water or other liquid on the USB terminal.**
- **When you have connected a cable, pay attention not to pull on the connected cable with your legs. Otherwise, it may result in**

– CONTINUED –

injury to you by falling over, or a malfunction of the connected device.

- If a device is connected for a long time when the engine is not running, doing so may cause the risk of a discharged battery. Even when the engine is running, we recommend that you do not connect a device for an unnecessarily long time.
- Do not connect a malfunctioning device. Doing so may cause the risk of smoke and fire.

NOTE

- The USB power supply is designed to supply a maximum rated power of 5.25V/1A. Before connecting a device, be sure to read the instruction manual of the device and check whether or not this specification of the output is supported by the device. If a device that requires power exceeding the maximum rating is connected, power supply or charging may not be possible. Even if charging could be completed, the time required for charging may be longer than when the genuine charger for that device is used.
- Depending on the device, charging may be possible only when a special cable is used. In this case, be sure to connect the device using the special cable.
- When a device that communicates with a PC is connected, power supply or charging may not be possible.
- When connect a device for charging, disconnect the device promptly after charging is completed.

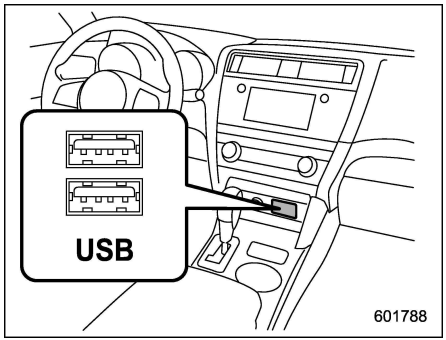

Front seat USB power supply (An audio device can be connected and used)

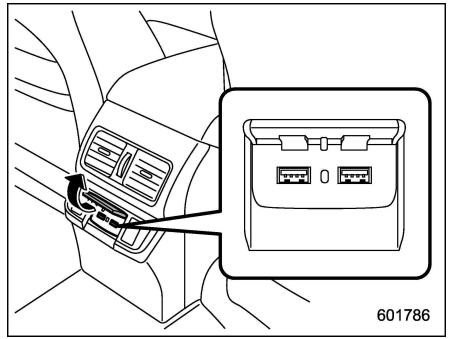

Console USB power supply (power supply function only) (if equipped)

When the ignition switch is in the “ACC” or “ON” position and a USB electronic device is connected to the USB terminal, 5V DC power can be supplied to the device. Use the USB terminal to use or charge an electronic device.

When using the terminal, open the USB power supply cover. After use, close the USB power supply cover.

Ashtray (if equipped)

CAUTION

Observe the following precautions. Not doing so could result in a fire.

- **Always extinguish matches and cigarettes before putting them into the ashtray, and then close the ashtray securely.**
- **Do not put flammable material in the ashtray.**
- **Do not leave a lighted cigarette in the ashtray.**
- **Do not leave a lot of cigarette butts in the ashtray.**

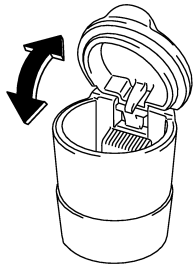

The portable ashtray can be installed in each cup holder. For the locations of the cup holders, refer to “Cup holder” ☞6-8. When using the ashtray, open the lid of the ashtray. When removing the ashtray from a cup holder, pull the ashtray upwards.

Fully close the lid after using the ashtray to help reduce residual smoke.

NOTE

Particles of ash and tobacco will accumulate around the hinges of the ashtray’s inner lid. Clean them off using a toothbrush or another narrow-ended implement.

Coat hook

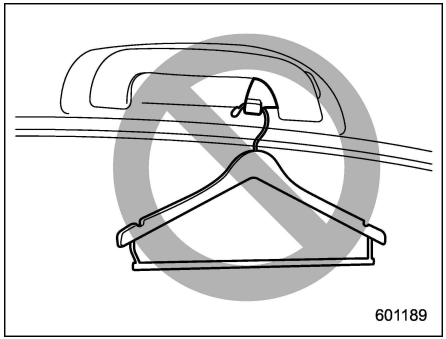

– CONTINUED –

⚠ WARNING

Obey the following instructions.

- **Do not hang coat hangers or other hard or pointed objects on the coat hooks. Hang clothing directly on the coat hooks without using hangers.**
- **Before hanging clothing on the coat hooks, make sure there are no pointed objects in the pockets.**

If these instructions are ignored, the following may occur in sudden stops or in a collision.

- **serious injuries by the items thrown through the cabin.**
- **incorrect SRS curtain airbag deployment**

⚠ CAUTION

Never hang anything on the coat hook that might obstruct the driver's view or that could cause injury in sudden stops or in a collision. And do not hang items on the coat hook that weigh 11 lbs (5 kg) or more.

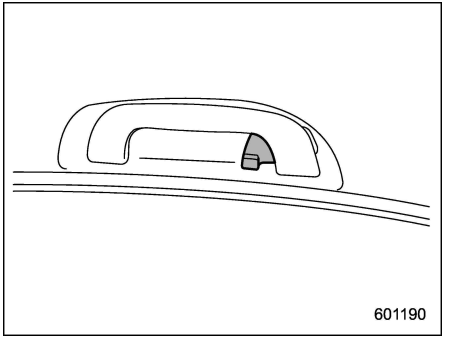

The coat hook is attached to each rear passenger's hand grip.

Shopping bag hook

⚠ CAUTION

Do not hang items on the shopping bag hook that weigh 11 lbs (5 kg) or more.

■ Legacy

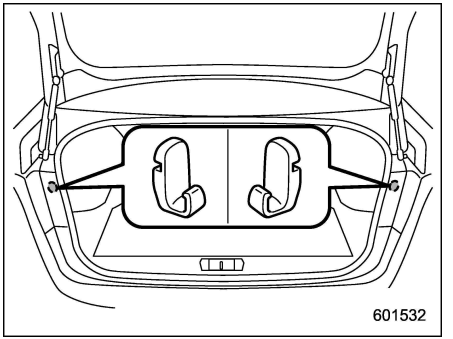

A shopping bag hook is attached to each inner side wall of the trunk near the trunk lid opening.

■ Outback

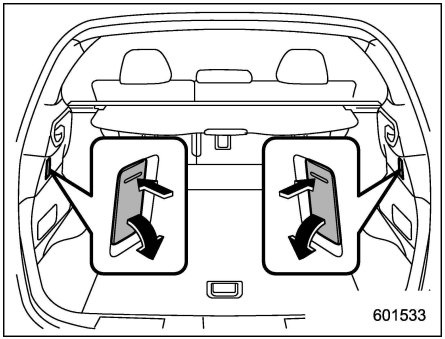

A shopping bag hook is attached to each side of the cargo area.

To use the hook, push the upper portion and the shopping bag hook will appear.

Store the hook after using it.

Convenient grip (Outback)

⚠ CAUTION

- **Do not hang items on the convenient grip that weigh 6 lbs (3 kg) or more. Depending on the conditions of use (for example, in low temperatures, etc.), the rear gate may lower even with lighter loads. However, this is not a malfunction. Be careful not to hit your head or other body parts.**
- **When using the convenient grip, do not try to close the rear gate. Doing so may cause the item on the grip to be jammed in the rear gate and damaged. Remove the item from the grip before closing the rear gate.**

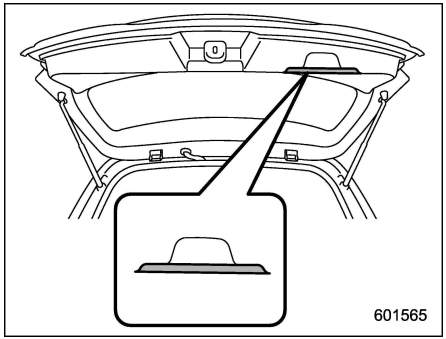

A convenient grip is attached to the rear gate trim. When the rear gate is open, you can hang a candle lantern, wet suit, etc. on the grip.

Floor mat

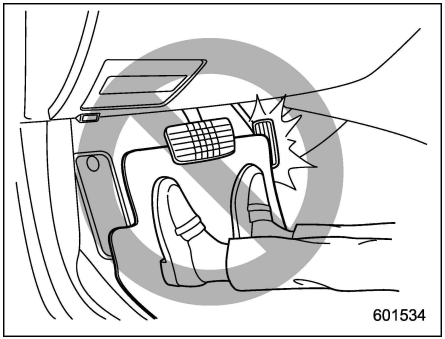

⚠ CAUTION

If the floor mat slips forward and interferes with the movement of the pedals during driving, it could cause an accident. Observe the following precautions to prevent the floor mat from slipping forward.

- **Be sure to use a genuine SUBARU floor mat designed with grommets in the correct locations.**
- **Make sure that the driver's floor mat is placed back in its proper location and is correctly secured on its retaining pins.**
- **Do not use more than one floor mat.**

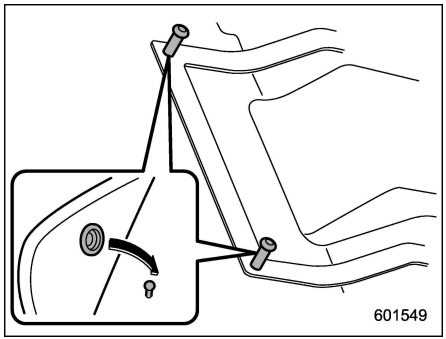

Retaining pins are located on the driver's side floor.

The floor mat should be properly secured using the built-in grommets, by placing the grommets over the pins and pushing them downward.

Cargo area cover (Outback – if equipped)

The cargo area cover is provided for covering the cargo area and to protect its contents from direct sunlight. This cover is detachable to make room for additional cargo.

■ Using the cover

To extend the cargo area cover:

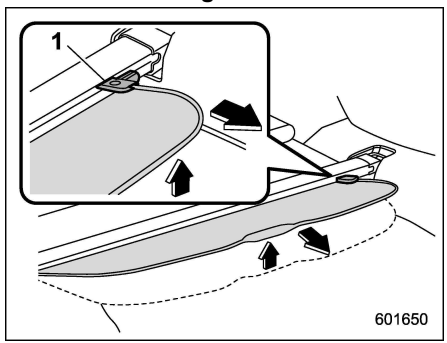

1) Stopper

1. Hold the handle located at the center of the cargo area cover and lift the handle upward slightly to unlock the stoppers that are located at the right and left end of the cover.

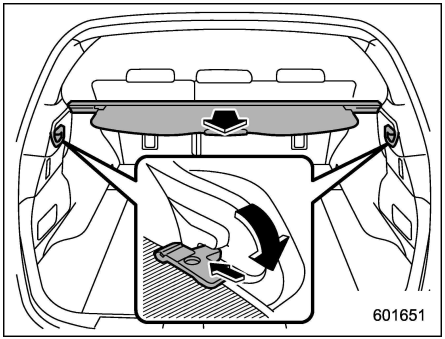

2. Pull the handle toward you to extend the cargo area cover. Then insert its hooks into the catches as shown.

To rewind the cargo area cover:

1. Hold the handle located at the center of the cargo area cover, pull it toward you and lift up slightly to unlock the cargo area cover from the catches.

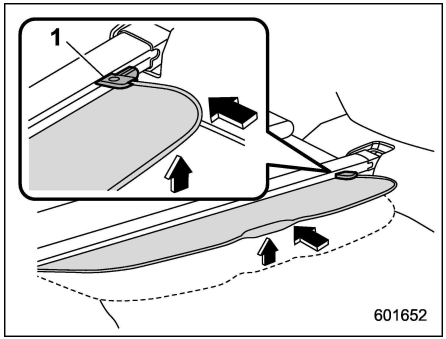

1) Stopper

2. Slowly rewind the cargo area cover completely. Then lift the handle upward slightly to lock the stoppers.

WARNING

Do not place anything on the extended cover. Putting excessive weight on the extended cover can break it and an object on the cover could tumble forward in the event of a sudden stop or collision. This could cause serious injury.

CAUTION

- **Be careful not to scratch the rear gate stays while extending and rewinding the cover. Scratches on the stays could cause leakage of gas from the stays, which may result in their inability to hold the rear gate open.**
- **When reclining the rear seatback, move the front cover backward so that the cover is not damaged.**

■ To install the front cover

CAUTION

When reclining the rear seatback, move the front cover backward so that the cover is not damaged.

– CONTINUED –

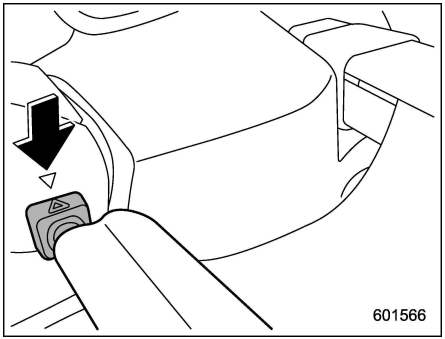

1. Align the right side of the front cover with the triangle mark before fixing the cover in place.
2. Push the front cover to the right side and shorten the bar.
3. Align the left side of the front cover with the triangle mark before fixing the cover in place.

■ To remove the front cover

1. Push the front cover to the right side and shorten the bar.
2. Remove the front cover.

■ To remove the cover housing

1. Rewind the cover.

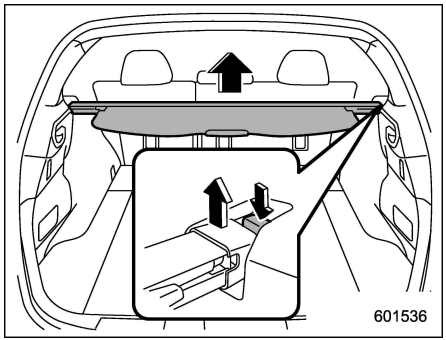

2. Hold down the button on the right-hand rear quarter panel and lift up the right-hand cover housing.
3. Remove the cover housing.

■ Stowage of the cargo area cover

The cargo area cover can be stowed in under the cargo floor.

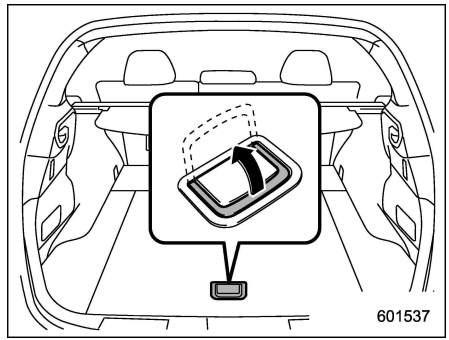

1. To open the lid, pull the handle up.

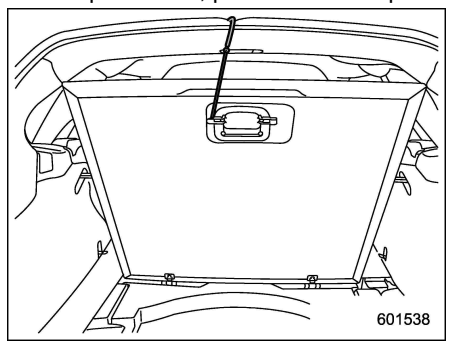

2. To keep the lid open, hang the hook (provided on the back of the lid) on the rear edge of the roof.

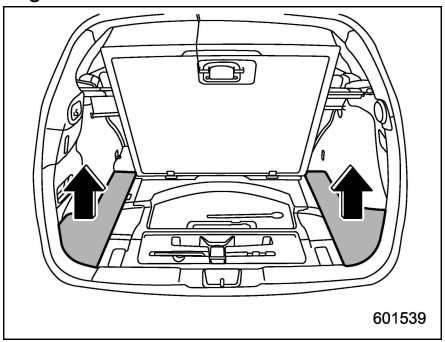

3. Remove the left and right parts of the cargo floor lid.

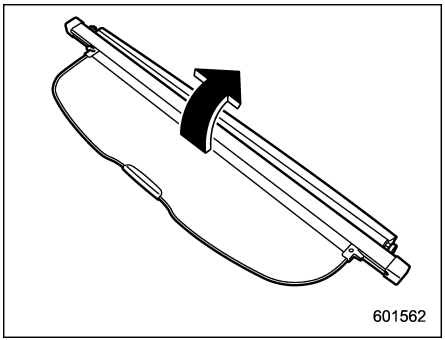

4. Turn the cover housing 180 degrees toward the front.

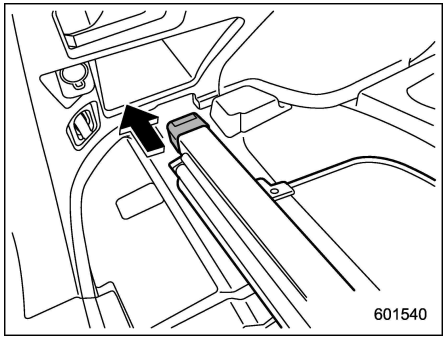

5. Insert the left end of the cover housing into the retainer.

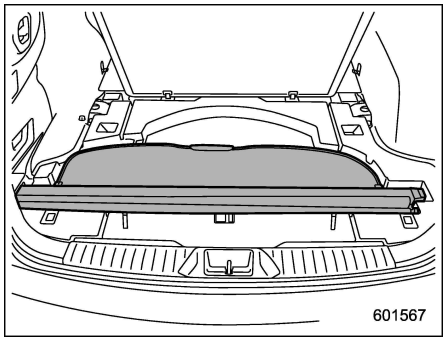

6. Stow the cover housing in the cargo area end.

■ To take out the stowed cover housing

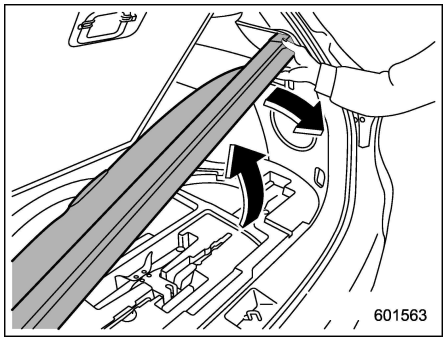

1. Raise the right side of the cover housing.
2. Take out the cover housing by pulling it toward you.

– CONTINUED –

■ To install the cover housing

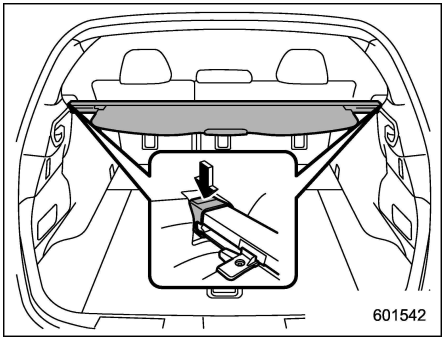

1. Insert both ends of the cover housing into the retainers.

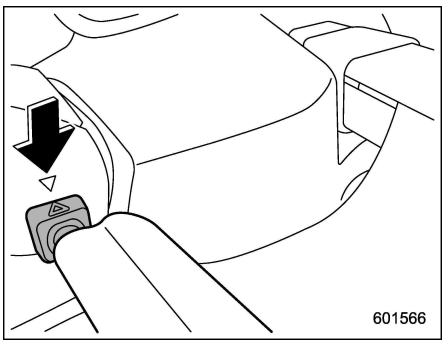

2. Make sure to fix the front part of the cargo area cover behind the rear seat.

Convenient tie-down hooks (Outback)

⚠ CAUTION

The convenient tie-down hooks are designed only for securing light cargo. Never try to secure cargo that exceeds the capacity of the hooks. The maximum load capacity is 110 lbs (50 kg) per hook.

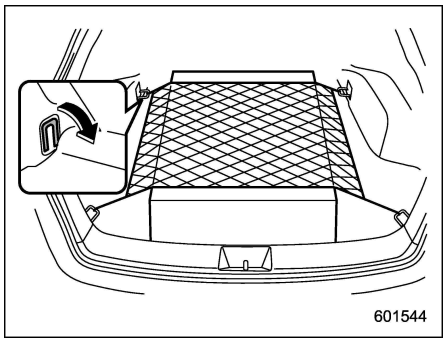

The cargo area is equipped with four tie-down hooks so that cargo can be secured with a luggage net or ropes.

When using the tie-down hooks, turn them down out of the storing recesses. When not in use, put the hooks up into the storing recesses.

Under-floor storage compartment

The subfloor storage compartment is located under the floor of the trunk or cargo area and can be used to store small items. To open the lid, pull the tab or handle up.

NOTE

When storing a flat tire, put the subfloor storage in the trunk or cargo area.

⚠ CAUTION

- **Always keep the lid of the subfloor storage compartment closed while driving to reduce the risk of injury in the event of sudden stop or an accident.**
- **Do not store spray cans, containers with flammable or corrosive liquids or any other dangerous items in the subfloor storage compartment.**

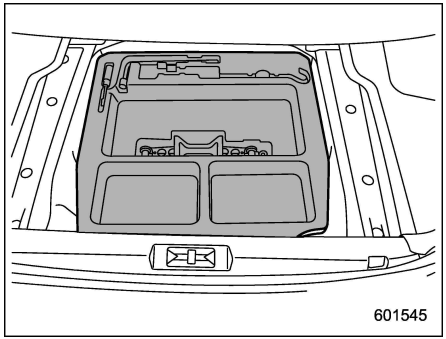

Legacy

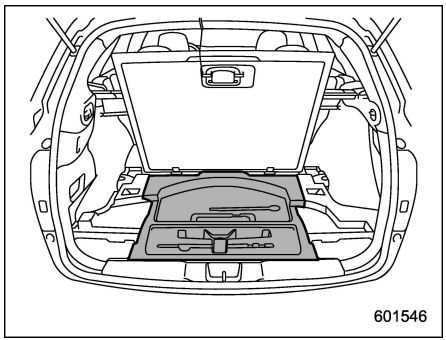

Outback

For Outback, hang the hook provided on the underside of the lid on the rear edge of the roof to keep the lid open.

Fuel 7-3
Fuel requirements 7-3
Fuel filler lid and cap 7-4
State emission testing (U.S. only) 7-7
Preparing to drive 7-8
Starting and stopping the engine (models without push-button ignition switch) 7-9
General precautions when starting/stopping engine 7-9
Starting engine 7-9
Stopping the engine 7-10
Steering lock 7-10
Starting and stopping engine (models with push-button start system) 7-11
Safety precautions 7-11
Operating range for push-button start system 7-11
Starting engine 7-11
Stopping engine 7-13
When access key fob does not operate properly 7-13
Steering lock 7-13
Remote engine start system (dealer option) 7-14
Models with “keyless access with push-button start system” 7-15
Models without “keyless access with push-button start system” 7-16
Entering the vehicle while it is running via remote start 7-19
Entering the vehicle following remote engine start shutdown 7-19
Pre-heating or pre-cooling the interior of the vehicle 7-19
Service mode (models without “keyless access with push-button start system”) 7-19
Remote transmitter program (models without “keyless access with push-button start system”) 7-19
System maintenance 7-20
Certification for remote engine starter 7-22
Continuously variable transmission 7-22
Select lever 7-23
Shift lock function 7-25
Selection of manual mode 7-27
Driving tips 7-28
Power steering 7-28
Braking 7-29
Braking tips 7-29
Brake system 7-30
Disc brake pad wear warning indicators 7-30
ABS (Anti-lock Brake System) 7-31
ABS self-check 7-31
ABS warning light 7-31
Electronic Brake Force Distribution (EBD) system 7-31
Steps to take if EBD system malfunctions 7-32
Vehicle Dynamics Control system 7-33
Vehicle Dynamics Control system monitor 7-34
Vehicle Dynamics Control OFF switch 7-34
X-mode (Outback) 7-35
To activate/deactivate the X-mode 7-36
Hill descent control function 7-37
Tire pressure monitoring system (TPMS) (if equipped) 7-38

TPMS screen 7-40
Parking your vehicle.....7-40
Electronic parking brake 7-40
Parking tips 7-45
Cruise control 7-45
To set cruise control 7-46
To temporarily cancel the cruise control.....7-47
To turn off the cruise control.....7-47
To change the cruising speed 7-47
Cruise control indicator 7-49
Cruise control set indicator.....7-49
BSD/RCTA (if equipped) 7-49
System features.....7-49
System operation.....7-51
BSD/RCTA approach indicator light/warning buzzer 7-53
BSD/RCTA warning indicator 7-54
BSD/RCTA OFF switch.....7-55
Certification for the BSD/RCTA 7-56
Handling of radar sensors 7-57
Reverse Automatic Braking System (if equipped) 7-58
Reverse Automatic Braking System overview.....7-59
Operating conditions 7-59
Reverse Automatic Braking System operation.....7-62
Canceling the Reverse Automatic Braking system operation.....7-66
RAB warning indicator.....7-66
Reverse Automatic Braking system ON/OFF setting.....7-66
Handling of the sonar sensors.....7-67

Fuel

⚠ CAUTION

Use of a fuel which is low in quality or use of an inappropriate fuel additive may cause damage to the engine and/or fuel system.

■ Fuel requirements

The engine is designed to operate using **unleaded gasoline** with an octane rating of **87 AKI (90 RON) or higher**.

▼ Fuel octane rating

Using a gasoline with a lower octane rating can cause persistent and heavy knocking, which can damage the engine. Do not be concerned if your vehicle sometimes knocks lightly when you drive up a hill or when you accelerate. See your dealer or a qualified service technician if you use a fuel with the specified octane rating and your vehicle knocks heavily or persistently.

▽ RON

This octane rating is the Research Octane Number.

▽ AKI

This octane rating is the average of the Research Octane and Motor Octane numbers and is commonly referred to as the Anti Knock Index (AKI).

▼ Unleaded gasoline

The neck of the fuel filler pipe is designed to accept only an unleaded gasoline filler nozzle. Under no circumstances should leaded gasoline be used because it will damage the emission control system and may impair driveability and fuel economy.

▼ California fuel

If your vehicle was certified to California Emission Standards as indicated on the underhood tune-up label, it is designed to optimize engine and emission control system performance with gasoline that meets the clean burning low-sulfur California gasoline specifications. If you live in any other state than California, your vehicle will operate on gasoline meeting Federal specifications. Gasoline sold outside California is permitted to have higher sulfur levels, which may affect the performance of your vehicle's catalytic converter and may produce a sulfur exhaust odor or smell. SUBARU recommends that you try a different brand of unleaded gasoline having lower sulfur to determine if the problem is fuel related before returning your vehicle to an authorized dealer for service. The CHECK ENGINE warning light/malfunction indicator light may also turn on. If this occurs, return to your authorized SUBARU dealer for diagnosis. If it is determined that the condition is caused by the type of fuel used, repairs may not be covered by your warranty.

▼ MMT

Some gasoline contains an octane-enhancing additive called MMT (Methylcyclopentadienyl Manganese Tricarbonyl). If you use such fuels, your emission control system performance may deteriorate and the CHECK ENGINE warning light/malfunction indicator light may turn on. If this happens, return to your authorized SUBARU Dealer for service. If it is determined that the condition is caused by the type of fuel used, repairs may not be covered by your warranty.

▼ Gasoline for cleaner air

⚠ CAUTION

Do not let fuel spill on the exterior surfaces of the vehicle. Fuels containing alcohol may cause paint damage, which is not covered under the SUBARU Limited Warranty.

Your use of gasoline with detergent ad-

– CONTINUED –

ditives will help prevent deposits from forming in your engine and fuel system. This helps keep your engine in tune and your emission control system working properly, and is a way of doing your part for cleaner air. If you continuously use a high quality fuel with the proper detergent and other additives, you should never need to add any fuel system cleaning agents to your fuel tank.

Many gasolines are now blended with materials called oxygenates. Use of these fuels can also help keep the air cleaner. Oxygenated blend fuels, such as ethanol (ethyl or grain alcohol) may be used in your vehicle, but should contain no more than 10% ethanol for the proper operation of your SUBARU.

Do not use any gasoline that contains more than 10% ethanol, including from any pump labeled E15, E30, E50 or E85 (which are only some examples of fuel containing more than 10% ethanol).

In addition, some gasoline suppliers are now producing reformulated gasolines, which are designed to reduce vehicle emissions. SUBARU approves the use of reformulated gasoline.

If you are not sure what the fuel contains, you should ask your service station operators if their gasolines contain detergents and oxygenates and if they have been reformulated to reduce vehicle emissions.

As additional guidance, only use fuels suited for your vehicle as explained in the following.

- Fuel should be unleaded and have an octane rating no lower than that specified in this manual.
- Methanol (methyl or wood alcohol) is sometimes mixed with unleaded gasoline. Methanol can be used in your vehicle **ONLY** if it does not exceed 5% of the fuel mixture **AND** if it is accompanied by sufficient quantities of the proper cosolvents and corrosion inhibitors required to prevent damage to the fuel system. Do not use fuel containing methanol **EXCEPT** under these conditions.
- If undesirable driveability problems are experienced and you suspect they may be fuel related, try a different brand of gasoline before seeking service at your SUBARU dealer.
- Fuel system damage or driveability problems which result from the use of improper fuel are not covered under the SUBARU Limited Warranty.

■ Fuel filler lid and cap

▼ Refueling

Only one person should be involved in refueling. Do not allow others to approach the area of the vehicle near the fuel filler pipe while refueling is in progress.

Be sure to observe any other precautions that are posted at the service station.

1. Stop the vehicle and turn off the engine.

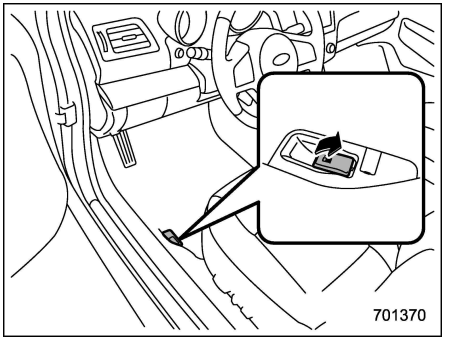

2. To open the fuel filler lid, pull the lid release lever up. The lever is on the floor at the left of the driver's seat.

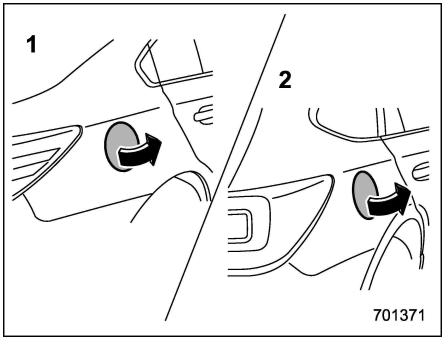

1) Legacy
2) Outback

3. Open the fuel filler lid.

WARNING

Before opening the fuel filler cap, first touch the vehicle body or a metal portion of the fuel pump or similar object to discharge any static electricity that may be present on your body. If your body is carrying an electrostatic charge, there is a possibility that an electric spark could ignite the fuel, which could burn you. To avoid acquiring a new static electric charge, do not get back into the vehicle while refueling is in progress.

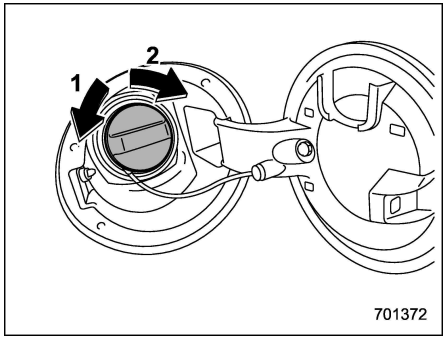

1) Open
2) Close

4. Remove the fuel filler cap by turning it slowly counterclockwise.

WARNING

- **Gasoline vapor is highly flammable. Before refueling, always first stop the engine and close all vehicle doors and windows. Make sure that there are no lighted cigarettes, open flames or electrical sparks in the adjacent area. Refueling must be performed outside. Quickly wipe up any spilled fuel.**
- **When opening the cap, grasp it firmly and turn it slowly to the left. Do not remove the cap quickly. Fuel may be under pressure and spray out of the fuel filler neck, especially in hot weather. If you hear a hissing sound while you are removing the cap, wait for the sound to stop and then slowly open the cap to prevent fuel from spraying out and creating a fire hazard.**

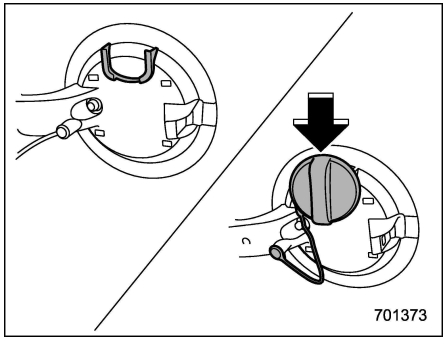

5. Set the fuel filler cap on the cap holder inside the fuel filler lid.

WARNING

- **When refueling, insert the fuel nozzle securely into the fuel filler pipe. If the nozzle is lifted or not fully inserted, its automatic stop-**

– CONTINUED –

ping mechanism may not function, causing fuel to overflow the tank and creating a fire hazard.

- **Stop refueling when the automatic stop mechanism on the fuel nozzle activates. If you continue to add fuel, temperature changes or other conditions may cause fuel to overflow from the tank and create a fire hazard.**

6. Stop filling the tank after the fuel filler pump automatically stops. Do not add any more fuel.
7. Put the cap back on, turn it clockwise until you hear a clicking noise. Be certain not to catch the tether under the cap while tightening.

⚠ CAUTION

Make sure that the cap is tightened until it clicks to prevent fuel spillage in the event of an accident.

8. Close the fuel filler lid completely.

⚠ CAUTION

If you spill any fuel on the painted surface, rinse it off immediately. Otherwise, the painted surface could be damaged.

NOTE

If the fuel filler cap is not tightened until it clicks or if the tether is caught under the cap, the CHECK ENGINE warning light/malfunction indicator light may illuminate. Refer to "CHECK ENGINE warning light/Malfunction indicator light" ☞3-15.

⚠ CAUTION

- **Never add any cleaning agents to the fuel tank. The addition of a cleaning agent may cause damage to the fuel system.**
- **After refueling, turn the cap to the right until it clicks to ensure that it is fully tightened. If the cap is not securely tightened, fuel may leak out while the vehicle is being driven or fuel spillage could occur in the event of an accident, creating a fire hazard.**
- **Do not let fuel spill on the exterior surfaces of the vehicle. Because fuel may damage the paint, be sure to wipe off any spilled fuel quickly. Paint damage caused by spilled fuel is not covered under the SUBARU Limited Warranty.**
- **Always use a genuine SUBARU fuel filler cap. If you use the wrong cap, it may not fit, and your fuel tank and emission control system may be damaged. It could also lead to fuel spillage and a fire.**
- **Immediately put fuel in the tank whenever the low fuel warning light illuminates. Engine misfires as a result of an empty tank could cause damage to the engine. Continuing to operate your vehicle at an extremely low fuel level may result in a reduction of engine performance.**

State emission testing (U.S. only)

WARNING

Only use a four-wheel dynamometer when testing an All-Wheel Drive (AWD) model.

Testing of an AWD model must NEVER be performed on a single two-wheel dynamometer. Attempting to do so will result in uncontrolled vehicle movement and may cause an accident or injuries to persons nearby.

CAUTION

- **At state inspection time, remember to tell your inspection or service station in advance not to place your SUBARU AWD vehicle on a two-wheel dynamometer. Otherwise, serious transmission damage will result.**
- **Resultant vehicle damage due to improper testing is not covered under the SUBARU Limited Warranty and is the responsibility of the state inspection program or its contractors or licensees.**

California and a number of federal states have Inspection/Maintenance programs to inspect your vehicle's emission control system. If your vehicle does not pass this test, some states may deny renewal of your vehicle's registration.

Your vehicle is equipped with a computer that monitors the performance of the engine's emission control system. Certified emission inspectors will inspect the On-Board Diagnostic (OBDII) system as part of the state emission inspection process. The OBDII system is designed to detect engine and transmission problems that might cause the vehicle emissions to exceed allowable limits. OBDII inspections apply to all 1996 model year and newer passenger cars and trucks. Over 30 states plus the District of Columbia have implemented emission inspection of the OBDII system.

- The inspection of the OBDII system consists of a visual operational check of the "**CHECK ENGINE**" warning light/malfunction indicator light (MIL) and an examination of the OBDII system with an electronic scan tool.
- A vehicle passes the OBDII system inspection if proper operation of the "**CHECK ENGINE**" warning light is observed, there are no stored diagnostic trouble codes, and the OBDII readiness monitors are all complete.
- A vehicle fails the OBDII inspection if the "**CHECK ENGINE**" warning light is not properly operating (light is illuminated or is not working due to a burned out bulb) or there is one or more diagnostic trouble codes stored in the vehicle's computer.
- A state emission inspection may reject (not pass or fail) a vehicle if the number of OBDII system readiness monitors "**NOT READY**" is greater than one. If the vehicle's battery has been recently replaced or disconnected, the OBDII system inspection may indicate that the vehicle is not ready for the emission test. Under this condition, the vehicle driver should be instructed to drive his/her vehicle for a few days to reset the readiness monitors and return for an emission re-inspection.
- Owners of rejected or failing vehicles should contact their SUBARU Dealer for service.

Some states still use dynamometers in their emission inspection program. A dynamometer is a treadmill or roller-like testing device that allows your vehicle's wheels to turn while the vehicle remains in one place. Prior to your vehicle being put on a dynamometer, tell your emission

– CONTINUED –

inspector not to place your SUBARU AWD vehicle on a two-wheel dynamometer. **Otherwise, serious transmission damage will result.**

The U.S. Environmental Protection Agency (EPA) and states using two-wheel dynamometers in their emission testing program have EXEMPTED SUBARU AWD vehicles from the portion of the testing program that involves a two-wheel dynamometer. There are some states that use four-wheel dynamometers in their testing program. When properly used, this equipment should not damage a SUBARU AWD vehicle.

Under no circumstances should the rear wheels be jacked off the ground, nor should the driveshaft be disconnected in an attempt to bypass AWD for state emission testing. An AWD vehicle must be tested using an AWD dynamometer with all 4 wheels driven and loaded.

Preparing to drive

You should perform the following checks and adjustments every day before you start driving.

1. Check that all windows, mirrors, and lights are clean and unobstructed.
2. Check the appearance and condition of the tires. Also check tires for proper inflation.
3. Look under the vehicle for any sign of leaks.
4. Check that the hood, trunk (Legacy) and rear gate (Outback) are fully closed.
5. Check the adjustment of the seat.
6. Check the adjustment of the inside and outside mirrors.
7. Fasten your seatbelt. Check that your passengers have fastened their seatbelts.
8. Check the operation of the warning and indicator lights when the ignition switch is turned to the “ON” position.
9. Check the gauges, indicator and warning lights after starting the engine.
10. Check that no small animals enter the engine compartment.

⚠ CAUTION

Trapping small animals in the cooling fan and belts of the engine may result in a malfunction. Check that no small animal enters the engine compartment and under the vehicle before starting the engine.

NOTE

- **Engine oil, engine coolant, brake fluid, washer fluid and other fluid levels should be checked daily, weekly or at fuel stops.**
- **When towing a trailer, refer to “Trailer hitch (Outback – if equipped)” ☞8-19.**

Starting and stopping the engine (models without push-button ignition switch)

■ General precautions when starting/stopping engine

WARNING

- Never start the engine from outside the vehicle (except when using the remote engine start system). It may result in an accident.
- Do not leave the engine running in locations with poor ventilation, such as a garage and indoors. The exhaust gas may enter the vehicle or indoors, and it may result in carbon monoxide poisoning.
- Do not start the engine near dry foliage, paper, or other flammable substances. The exhaust pipe and exhaust emissions can create a fire hazard at high temperatures.

CAUTION

- If the engine is stopped during driving, the catalyst may overheat and burn.
- When starting the engine, be sure to sit in the driver's seat (except when using the remote engine start system).

NOTE

- Avoid racing and rapid acceleration immediately after the engine has started.
- Until the engine is warmed up sufficiently, the engine speed is maintained high. The engine speed will gradually drop as the engine warms up.
- On rare occasions, it may be difficult to start the engine depending on the fuel used and the driving condition (repeated short trips when the engine is not warmed up sufficiently). In such a case, it is recommended to switch to a different brand of fuel.
- On rare occasions, transient knocking may be heard from the engine when the accelerator is operated rapidly such as a rapid start-up and a rapid acceleration. This is not a malfunction.
- The engine starts more easily when the headlights, air conditioner and rear window defogger are turned off.

■ Starting engine

CAUTION

Do not operate the starter motor continuously for more than 10 seconds. If the engine fails to start after operating the starter for 5 to 10 seconds, wait for 10 seconds or more before trying again.

NOTE

- It may be difficult to start the engine when the battery has been disconnected and reconnected (for maintenance or other purposes). This difficulty is caused by the electronically controlled throttle's self-diagnosis function. To overcome it, keep the ignition switch in the "ON" position for approximately 10 seconds before starting the engine.
- Do not shift the select lever while the starter is cranking.

– CONTINUED –

⚠ CAUTION

If you restart the engine while the vehicle is moving, shift the select lever into the "N" position. Do not attempt to place the select lever of a moving vehicle into the "P" position.

1. Apply the parking brake.
2. Turn off unnecessary lights and accessories.
3. Shift the select lever to the "P" or "N" position (preferably "P" position). The starter will only operate when the select lever is at the "P" or "N" position.
4. Turn the ignition switch to the "ON" position and check the operation of the warning and indicator lights. Refer to "Warning and indicator lights" ☞3-12.
5. Turn the ignition switch to the "START" position **without** depressing the accelerator pedal. Release the key immediately after the engine has started.

If the engine does not start, perform the following procedure.

(1) Turn the ignition switch to the "LOCK" position and wait for at least 10 seconds. After checking that the parking brake is applied, turn the ignition switch to the "START" position while depressing the accelerator pedal slightly (approximately a quarter of the full stroke). Release the accelerator pedal as soon as the engine starts.

(2) If this fails to start the engine, turn the ignition switch back to the "LOCK" position and wait for at least 10 seconds. Then fully depress the accelerator pedal and turn the ignition switch to the "START" position. If the engine starts, quickly release the accelerator pedal.

(3) If this fails to start the engine, turn the ignition switch again to the "LOCK" position. After waiting for 10 seconds or longer, turn the ignition switch to the "START" position without depressing the accelerator pedal.

(4) If the engine still does not start, contact your nearest SUBARU dealer for assistance.

6. Confirm that all warning and indicator lights have turned off after the engine has started. The fuel injection system automatically lowers the idle speed as the engine warms up.

While the engine is warming up, make sure that the select lever is at the "P" or "N" position and that the parking brake is applied.

■ Stopping the engine

⚠ WARNING

Do not stop the engine when the vehicle is moving. This will cause loss of power to the power steering and the brake booster, making steering and braking more difficult. It could also result in accidental activation of the "LOCK" position on the ignition switch, causing the steering wheel to lock.

The ignition switch should be turned off only when the vehicle is stopped and the engine is idling.

■ Steering lock

After stopping the engine and the key is removed from ignition switch, the steering wheel will be locked due to the steering lock function.

When the engine is restarted, the steering lock will be automatically canceled.

▼ When the steering lock cannot be released

When you cannot unlock the steering wheel, perform the following steps.

1. Check that the parking brake is applied.

2. Turn off unnecessary lights and accessories.
3. Check that the select lever is set in the "P" position.
4. Depress the brake pedal and keep it depressed.
5. Turn the ignition switch to the "ON" position while turning the steering wheel left and right.

If you cannot unlock the steering wheel by doing the steps, contact your nearest SUBARU dealer.

Starting and stopping engine (models with push-button start system)

■ Safety precautions

Refer to "Safety precautions" ☞2-11.

■ Operating range for push-button start system

Refer to "Operating range for push-button start system" ☞3-5.

■ Starting engine

⚠ WARNING

- **There are some general precautions when starting the engine. Carefully read the precautions described in "General precautions when starting/stopping engine" ☞7-9.**
- **If the indicator on the push-button ignition switch flashes in green after the engine has started, never drive the vehicle. The steering is still locked, and it may result in an accident.**

⚠ CAUTION

- **When the operation indicator on the push-button ignition switch is flashing in orange, there may be a malfunction with the vehicle. Contact a SUBARU dealer immediately.**
- **If the indicator on the push-button ignition switch is flashing in green after the engine has started, it means that the steering is still locked. While moving the steering wheel right and left, depress the brake pedal, and press the push-button ignition switch.**
- **Do not continue pressing the push-button ignition switch for more than 10 seconds. Doing so could cause a malfunction. If the engine does not start, stop pressing the push-button ignition switch. Instead, press the push-button ignition switch without depressing the brake pedal to switch the power status to "OFF". Wait 10 seconds, and then press the push-button ignition switch to start the engine.**

– CONTINUED –

NOTE

- **When pressing the push-button ignition switch while depressing the brake pedal:**
  - **The engine starter operates for a maximum of 10 seconds and after starting the engine, the starter stops automatically.**
  - **The engine can be started regardless of the power status.**
- **If the engine does not start, check the security indicator light. Then press the push-button ignition switch without depressing the brake pedal to switch the power to "OFF".**
  - **If the light had illuminated, try to start the engine again.**
  - **If the light had been off, press the push-button ignition switch while depressing the brake pedal more forcefully.**
- **The engine start procedures may not function depending on the radio wave conditions around the vehicle. In such a case, refer to "Starting engine" ☞9-20.**
- **If the vehicle battery is discharged, the steering cannot be unlocked. Charge the battery.**
- **Until the engine is warmed up sufficiently, the engine speed will be maintained high. The engine speed will decrease as the engine warms up.**
- **Do not shift the select lever while the starter is cranking.**

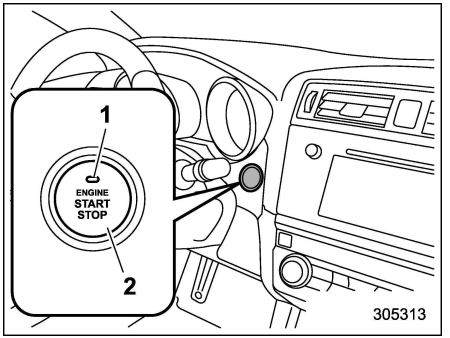

1) Operation indicator
2) Push-button ignition switch

When the push-button ignition switch is pressed while depressing the brake pedal, the engine will start. The starting procedure for the engine is as follows.

1. Carry the access key fob, and sit in the driver's seat.
2. Apply the parking brake.
3. Shift the select lever into the "P" position. The engine can also start when the select lever is in the "N" position, however, for safety reasons, start in the "P" position.
4. Depress the brake pedal until the operation indicator on the push-button ignition switch turns green. When starting with the select lever in the "N" position, the indicator does not turn green.
5. While depressing the brake pedal, press the push-button ignition switch.

NOTE

- **While pressing the select lever button in, the indicator on the push-button ignition switch will not turn green even when the select lever is in the "P" position.**
- **In case the engine does not start by the normal engine start procedure, move the select lever to the "P" position, and switch the power to "ACC". Depress the brake pedal, and press the push-button ignition switch for at least 15 seconds. The engine may start. Only use this engine start procedure in case of emergency.**
- **When the engine is not started, the brake pedal may feel stiff. In such a case, depress the brake pedal more forcefully than usual. Check that the operation indicator on the push-button ignition switch turns green, and press the push-button ignition switch to start the engine.**

■ Stopping engine

1. Stop the vehicle completely.
2. Move the select lever to the “P” position.
3. Press the push-button ignition switch. The engine will stop, and the power will be switched off.

⚠ WARNING

- **Do not touch the push-button ignition switch during driving.**

  When the push-button ignition switch is operated as follows, the engine will stop.

  – The switch is pressed and held for 3 seconds or longer.

  – The switch is pressed briefly 3 times or more in succession.

  When the engine stops, the brake booster will not function. A greater foot pressure will be required on the brake pedal.

  The power steering system will not operate either. A greater force will be required to steer, and it may result in an accident.
- **If the engine stops during driving, do not operate the push-button ignition switch or open any of the doors until the vehicle is stopped in a safe location. It is dangerous because the steering lock may be activated. Stop the vehicle in a safe place, and contact a SUBARU dealer immediately.**

⚠ CAUTION

- **Do not stop the engine while the select lever is in a position other than the “P” position.**
- **If the engine is stopped while the select lever is in a position other than the “P” position, the power will be in “ACC”. If the vehicle is left in this condition, the battery may be discharged.**

NOTE

Although you can stop the engine by operating the push-button ignition switch, do not stop the engine during driving except in an emergency.

■ When access key fob does not operate properly

Refer to “Access key fob – if access key fob does not operate properly” ☞9-19.

■ Steering lock

After stopping the engine and the driver’s door is open, the steering wheel will be locked due to the steering lock function.

When the engine is restarted, the steering lock will be automatically canceled.

▼ When the steering lock cannot be released

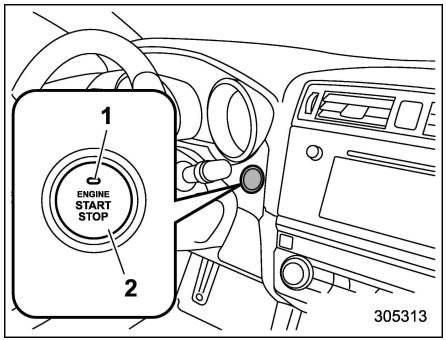

1) Operation indicator
2) Push-button ignition switch

When you cannot restart the engine due to the steering lock, check the status of operation indicator and perform the following steps.

– CONTINUED –

▽ **Operation indicator flashing in green**

1. Check that the select lever is set in the "P" position.
2. Depress the brake pedal and keep it.
3. Press the push-button ignition switch while turning the steering wheel left and right.

▽ **Operation indicator flashing in orange**

There may be a malfunction in the steering lock function. Immediately contact your nearest SUBARU dealer.

Remote engine start system (dealer option)

⚠ WARNING

- **There are some general precautions when starting the engine. Carefully read the precautions described in "General precautions when starting/stopping engine" ☞7-9.**
- **Do not remote start a vehicle in an enclosed environment (e.g. closed garage). Prolonged operation of a motor vehicle in an enclosed environment can cause a harmful build-up of Carbon Monoxide. Carbon Monoxide is harmful to your health. Exposure to high levels of Carbon Monoxide can cause headaches, dizziness or in extreme cases unconsciousness and/or death.**
- **Before performing any servicing of the vehicle, temporarily place the remote engine start system in service mode to prevent the system from unexpectedly starting the engine.**

The remote engine start system allows you to start the engine from outside the vehicle. In addition, the remote engine start system can activate the heater or air conditioner, providing you with a comfortable cabin upon entry.

NOTE

The length of time for which it is acceptable to allow the engine to remain idling may be bound by local laws and regulations. Check the local rules when using the remote engine start system.

■ Models with “keyless access with push-button start system”

NOTE

For more details, refer to the Owner’s Manual supplement for the remote engine start system.

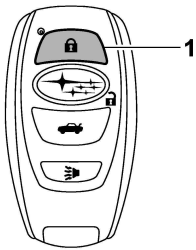

Access key fob
1) Lock button

An access key fob can be used as the remote engine start transmitter. Operate the lock button to start or stop the engine as follows.

▼ Before starting the engine

Before using the remote engine start system to start the engine, confirm the following conditions.

- The select lever is in the “P” position.
- All doors including the rear gate are closed.
- The engine hood is closed.
- The push-button ignition switch is in the “OFF” position.

▼ When starting the engine

To start the engine with remote engine start system, briefly press the lock button twice within 2 seconds, then press and hold the lock button for 3 seconds.

1. Press the lock button briefly. The hazard warning flashers then flash once and the keyless buzzer chirps once.
2. Within 2 seconds, press the lock button briefly again. The hazard warning flashers then flash once again, and the keyless buzzer chirps once again.
3. After step 2, immediately press and hold the lock button. The hazard warning flashers then flash three times, and the horn will honk once.
4. Approximately 3 seconds after step 3, release the lock button. The engine will then start successfully.

▼ When stopping the engine

Press and hold the lock button to stop the engine with remote engine start system.

▼ Automatic engine shutdown

The remote engine start system will automatically shut down or will not start the engine under the following conditions.

- The total run-time has exceeded 20 minutes.
- Any door or the rear gate is opened.
- The select lever is moved to any position other than “P”.
- The engine hood is opened.
- The push-button ignition switch is pressed.
- The brake pedal is depressed.
- The engine speed is 3,000 rpm or more.

The time until the engine automatically stops differs according to the setting.

To change the time until the engine automatically stops, contact your SUBARU dealer. However, local laws and regulations may prohibit changing this time.

– CONTINUED –

■ Models without “keyless access with push-button start system”

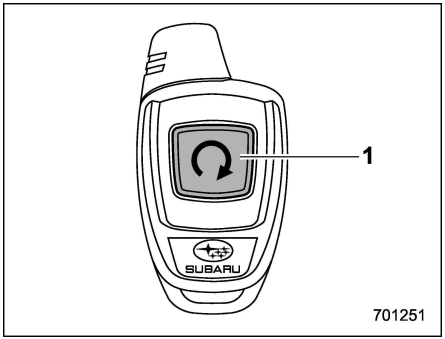

Remote engine starter transceiver (fob)
1) Fob button

▼ Starting the engine

NOTE

All vehicle doors (including rear gate/trunk lid) and the engine hood must be closed prior to activating the remote engine start system. Any open entry point will prevent starting or cause the engine to stop.

The remote engine start system is activated by pressing the fob button on your remote engine starter transceiver (fob) twice within 3 seconds. If the fob is within operating range of the system and the start request is received, the following will occur.

- The fob flashes and beeps once.
- The horn sounds once.
- The side marker lights, tail lights, and parking lights flash once.

If the fob is not within range (the user is too far away from the vehicle), the fob will indicate two long flashes without beeping.

The system will check certain safety preconditions before starting, and if all conditions are met, the engine will start within 5 seconds. After the engine starts, the following will occur.

- The fob flashes and beeps twice.
- The horn sounds once.
- The side marker lights, tail lights, and parking lights flash once.

While the engine is idling via the remote engine start system, the following will occur.

- The side marker lights, tail lights, and parking lights remain illuminated.
- The fob button flashes once every 3 seconds.
- The power windows are disabled.

If the engine turns over but does not start (or starts and stalls) the remote engine start system will power off and then attempt to start the engine 3 additional times. The system will not attempt to restart the engine if it determines a vehicle malfunction is preventing starting. If the engine does not start after 3 additional attempts, the remote engine start request will be aborted.

▼ Stopping the engine

Press and hold the fob button for at least 2 seconds to stop the engine. The fob will flash and beep three times, indicating the engine has stopped. If the stop request is not received (for example, if the user is too far away from the vehicle), the fob will continue to flash once every 3 seconds. The system will automatically stop the engine after 15 minutes.

▼ Remote start safety features

For safety and security reasons, the remote engine start system will prevent starting (or stop the engine if running) and sound the horn twice if any of the following conditions is detected. In addition, the fob will flash and beep 3 times.

- The brake pedal is depressed
- A key is in the ignition switch
- The engine hood is open
- The remote start system “Service mode” is engaged
- The engine idle speed exceeds 3,500

RPM

- The security alarm is triggered
- The select lever is not in the “P” position

If the system detects any door (including the rear gate/trunk lid) open during operation, it will prevent starting or stop the engine, and sound the horn and flash side marker lights, tail lights, and parking lights 6 times.

In addition to the items above, if the vehicle’s engine management system determines there is a safety risk due to a vehicle-related problem, the vehicle will power down and the horn will sound 3 times.

NOTE

- **If the alarm system is armed at the time of remote engine starter activation (the security indicator light on the combination meter is flashing), the alarm system will remain armed throughout the remote start run cycle.**
- **If the alarm system is disarmed at the time of remote engine starter activation (the security indicator light on the combination meter is not flashing), the alarm system will remain disarmed throughout the remote start run cycle.**

▼ Remote start operation - fob confirmation

Your remote engine starter fob is a bidirectional transceiver that can confirm system operation with several different visual and audible indications. The fob’s LED-backlit button and internal piezo buzzer will indicate status of the system using the following flash and beep sequences, provided the fob is within operational range of the system.

– CONTINUED –

Precondition	Fob Indication		Meaning
	Flash	Beep	
Fob start button is being pressed	Continuous while button is held down	—	The fob is transmitting an RF signal
User attempts to start engine by pressing fob button twice within 3 sec	1 flash	1 beep	Engine start request received
	2 flashes	2 beeps	Engine started successfully
	1 flash every 3 sec	—	Engine idling
	3 flashes	3 beeps	Vehicle is in range but engine not started
	2 long flashes	—	Vehicle not in range (engine not started)
Engine idling by remote engine start operation	1 flash every 3 sec	—	Engine idling
	3 flashes	3 beeps	Engine stopped by system timeout or for safety reasons (see sections above)
User attempts to stop engine by pressing and holding fob button for at least 2 sec.	3 flashes	3 beeps	Engine stopped by user request
	1 flash every 3 sec	—	Stop request not received. Engine still idling.

■ Entering the vehicle while it is running via remote start

1. Unlock the vehicle doors using the keyless access function (if equipped) or remote keyless entry system, then open the door(s). If the vehicle's doors are unlocked manually using the key, the vehicle's alarm system will trigger when a door is opened (if the alarm system is armed prior to activating the remote engine start system) and the engine will turn off. Perform either of the following procedures to disarm the alarm system. Refer to "Alarm system" ☞2-29.
   - Insert the key into the ignition switch and turn it to the "ON" position (models without "keyless access with push-button start system")
   - Push the push-button ignition switch to the "ACC" or "ON" position (models with "keyless access with push-button start system")
   - Press any button on the access key fob/remote keyless entry transmitter.
2. Enter the vehicle.
3. The engine will shut down when any door or rear gate is opened.
4. For models without "keyless access with push-button start system", insert the key into the ignition switch and turn to the "START" position to restart the engine. For models with "keyless access with push-button start system", press the push-button ignition switch while depressing the brake pedal to restart the engine.

■ Entering the vehicle following remote engine start shut-down

An alarm trigger may occur if the vehicle is opened by the remote keyless entry system/keyless access function within a few seconds immediately following remote engine start shutdown.

■ Pre-heating or pre-cooling the interior of the vehicle

Before exiting the vehicle, set the temperature controls to the desired setting and operation. After the system starts the engine, the heater or air conditioning will activate and heat or cool the interior to your setting.

■ Service mode (models without "keyless access with push-button start system")

In service mode, the remote engine start function is temporarily disabled to prevent the system from unexpectedly starting the engine while being serviced.

To engage or disengage service mode:

1. Enter the vehicle and close all vehicle doors and the rear gate/trunk lid.
2. Verify that the select lever is in the "P" position.
3. Depress and hold the brake pedal.
4. Turn the ignition switch to the "ON" position.
5. Press and release the remote engine start transmitter "" button three times. The system will honk the vehicle's horn each time the button is pressed.
6. The system will pause for 1 second then honk the vehicle's horn three times to indicate that the service mode has been engaged or honk one time to indicate that the service mode has been disengaged.

NOTE

When taking your vehicle in for service, it is recommended that you inform the service personnel that your vehicle is equipped with a remote engine start system.

■ Remote transmitter program (models without "keyless access with push-button start system")

New transmitters can be programmed to the remote engine start system in the

– CONTINUED –

event that a transmitter is lost, stolen, damaged or additional transmitters are desired (the system will accept up to eight transmitters). New remote engine start transmitters can be programmed according to the following procedure.

1. Open the driver's door (the driver's door must remain opened throughout the entire process).
2. Depress and hold the brake pedal.
3. Turn the ignition switch to "ON" then "LOCK", back to "ON" then "LOCK", back to "ON" then "LOCK", then back to "ON" again and leave the ignition "ON" throughout the programming process.
4. The system will flash the side marker lights, tail lights and parking lights and honk the horn three times, indicating that the system has entered the transmitter learn mode.
5. Press and release the "" button on the transmitter that you want to program.
6. The system will flash the side marker lights, tail lights and parking lights and honk the horn one time, indicating that the system has learned the transmitter. Upon successful programming, the remote start confirmation transmitter button will flash one time.
7. Repeat step 5 for any additional transmitters (the system will accept up to eight transmitters).
8. The system will exit the transmitter learn mode if the key is turned to the "LOCK" position, the door is closed or after 2 minutes.

■ System maintenance

NOTE

For models without "keyless access with push-button start system":

In the event that the vehicle's battery is replaced, discharged or disconnected, it will be necessary to start the vehicle a minimum of one time using the key prior to activating the remote engine start system. This is required to allow the vehicle electronic systems to re-synchronize.

▼ Changing the batteries

⚠ CAUTION

- **Do not let dust, oil or water get on or in the remote engine start transmitter when replacing the battery.**
- **Be careful not to damage the printed circuit board in the remote engine start transmitter when replacing the battery.**
- **Be careful not to allow children to touch the battery and any removed parts; children could swallow them.**
- **There is a danger of explosion if an incorrect replacement battery is used. Replace only with the same or equivalent type of battery.**
- **Batteries should not be exposed to excessive heat such as sunshine, fire or the like.**

For models with "keyless access with push-button start system:

Perform the procedure described in "Replacing battery of access key fob" ☞11-48.

For models without "keyless access with push-button start system":

The 3-volt lithium battery (model CR-2032) supplied in your remote engine start transmitter should last approximately one year, depending on usage. When the battery begins to weaken, you will notice a decrease in range (distance from the vehicle that your remote control operates). Follow the instructions below to change the remote engine start transmitter battery.

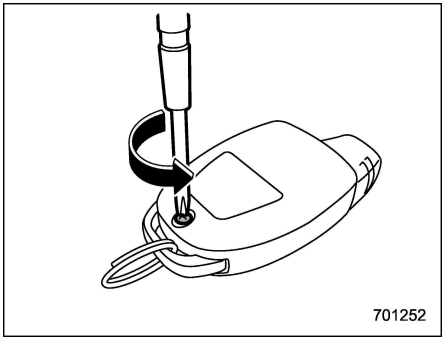

1. Remove the small phillips screw located on the back side of the transmitter.

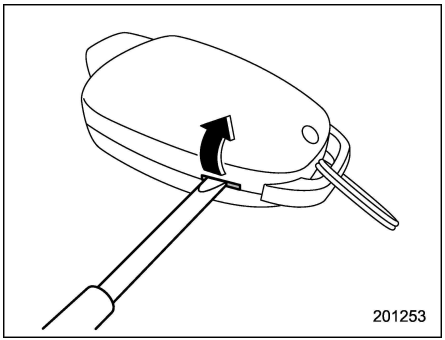

2. Carefully pry the remote engine start transmitter halves apart using a small flathead screwdriver.

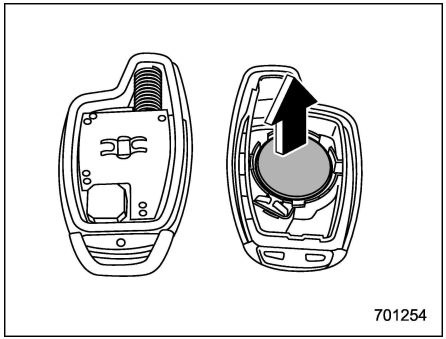

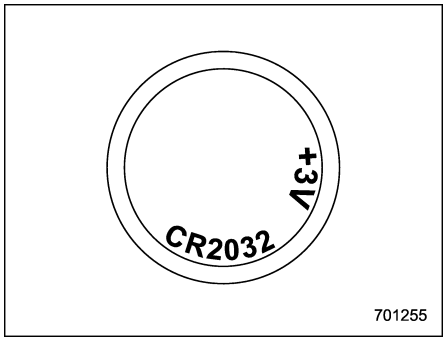

3. Remove the circuit board from the bottom half of the case and remove the battery and replace with a new one. Be sure to observe the (+) sign on the old battery before removing it to ensure that the new battery is inserted properly (battery "+" should be pointed away from the transmitter circuit board on the battery).

4. Carefully snap the case halves back together, reinstall the phillips screw and test the remote engine start system.

NOTE

To comply with the FCC RF exposure compliance requirements, no change to the antenna or the device is permitted. Any change to the antenna or the device could result in the device exceeding the RF exposure requirements and void user's authority to operate the device.

– CONTINUED –

■ Certification for remote engine starter

▼ U.S.-spec. models

⚠ CAUTION

FCC WARNING

Changes or modifications not expressly approved by the party responsible for compliance could void the user's authority to operate the equipment.

NOTE

This device complies with part 15 of the FCC Rules. Operation is subject to the following two conditions: (1) This device may not cause harmful interference, and (2) this device must accept any interference received, including interference that may cause undesired operation.

▼ Canada-spec. models

NOTE

This device complies with Industry Canada's licence-exempt RSSs. Operation is subject to the following two conditions: (1) This device may not cause interference; and (2) This device must accept any interference, including interference that may cause undesired operation of the device.

REMARQUE

Le présent appareil est conforme aux CNR d'Industrie Canada applicables aux appareils radio exempts de licence. L'exploitation est autorisée aux deux conditions suivantes: (1) l'appareil ne doit pas produire de brouillage; (2) l'utilisateur de l'appareil doit accepter tout brouillage radioélectrique subi, même si le brouillage est susceptible d'en compromettre le fonctionnement.

203226

Continuously variable transmission

The continuously variable transmission is electronically controlled and provides an infinite number of forward speeds and 1 reverse speed. It also has a manual mode.

⚠ WARNING

Do not shift from the "P" or "N" position into the "D" or "R" position while depressing the accelerator pedal. This may cause the vehicle to lurch forward or backward.

⚠ CAUTION

- **Observe the following precautions. Failure to observe these precautions could cause damage to the transmission.**
  - **Shift into the "P" or "R" position only after the vehicle has completely stopped.**
  - **Do not shift from the "D" position into the "R" position or vice versa until the vehicle has completely stopped.**
- **Do not race the engine for more than 5 seconds in any position**

except the "N" or "P" position when the brake is applied or when chocks are used in the wheels. This may cause the transmission fluid to overheat.

- Never move the vehicle rearward by inertia with the select lever set in a forward driving position or move the vehicle forward by inertia with the select lever set in the "R" position. Doing so may result in an unexpected accident or malfunction.
- When parking the vehicle, first securely apply the parking brake and then place the select lever in the "P" position. Do not park for a long time with the select lever in any other position as doing so could result in a dead battery.

NOTE

- When the engine coolant temperature is still low, the transmission will upshift to higher engine speeds than when the coolant temperature is sufficiently high in order to shorten the warm-up time and improve driveability. The gearshift timing will automatically shift to the normal timing after the engine has warmed up.
- Immediately after transmission fluid is replaced, you may feel that the transmission operation is somewhat unusual. This results from invalidation of data which the on-board computer has collected and stored in memory to allow the transmission to shift at the most appropriate times for the current condition of your vehicle. Optimized shifting will be restored as the vehicle continues to be driven for a while.
- When driving under continuous heavy load conditions such as towing a camper or climbing a long, steep hill, the engine speed, vehicle speed and air conditioning system cooling performance may automatically be reduced. This is not a malfunction. This phenomenon results from the engine control function maintaining the cooling performance of the vehicle. The engine and vehicle speed will return to a normal speed when the engine is able to maintain the optimum cooling performance after the heavy load decreases. Driving under a heavy load must be performed with extreme care. Do not try to pass a vehicle in front when driving on an uphill slope while towing.
- The continuously variable transmission is a chain type system that provides superior transmission efficiency for maximum fuel economy. At times, depending on varying driving conditions, a chain operating noise may be heard that is characteristic of this type of system.

■ Select lever

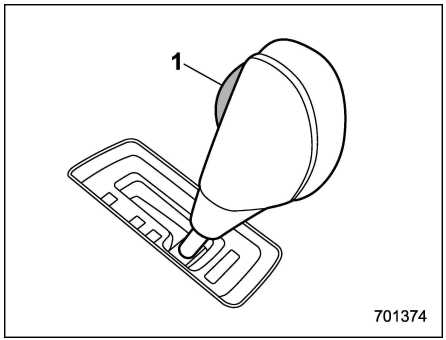

1) Select lever button

– CONTINUED –

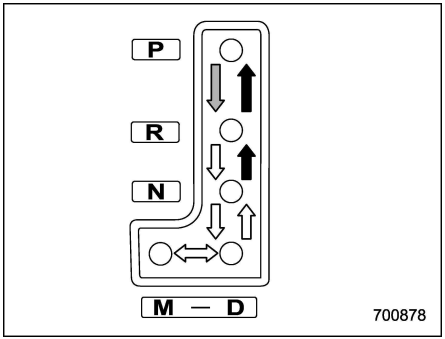

⇨ : With the brake pedal depressed, shift while pressing the select lever button in
➡ : Shift while pressing the select lever button in
⇨ : Shift without pressing the select lever button

The select lever has four positions, “P”, “R”, “N”, “D” and also has a manual gate for using the manual mode.

NOTE

For some models, to protect the engine while the select lever is in the “P” or “N” position, the engine is controlled so that the engine speed may not become too high even if the accelerator pedal is depressed hard.

▼ P (Park)

This position is for parking the vehicle and starting the engine. In this position, the transmission is mechanically locked to prevent the vehicle from rolling freely.

When you park the vehicle, first apply the parking brake, then shift into the “P” position. Do not hold the vehicle with only the mechanical friction of the transmission.

To shift the select lever from the “P” to any other position, you should depress the brake pedal fully then move the select lever. This prevents the vehicle from lurching when it is started.

▼ R (Reverse)

This position is for backing the vehicle. To shift from the “N” to “R” position, stop the vehicle completely then move the lever to the “R” position while pressing the select lever button in.

When the ignition switch has been turned to the “LOCK”/“OFF” position, movement of the select lever from the “N” to “R” position is possible for a limited time period by depressing the brake pedal, and then it becomes impossible. For details, refer to “Shift lock function” ☞7-25.

▼ N (Neutral)

This position is for restarting a stalled engine. In this position, the transmission is neutral, meaning that the wheels and transmission are not locked. Therefore, the vehicle will roll freely, even on the slightest incline unless the parking brake or foot brake is applied.

⚠ WARNING

Do not drive the vehicle with the select lever in the “N” (neutral) position. Engine braking has no effect in this condition and the risk of an accident is consequently increased.

NOTE

If the select lever is in the “N” position when you stop the engine for parking, you may not subsequently be able to move it to the “R” and “P” positions. If this happens, turn the ignition switch to the “ON” position. You will then be able to move the select lever to the “P” position.

▼ D (Drive)

This position is for normal driving. The transmission shifts automatically and continuously into a suitable gear according to the vehicle speed and the acceleration you require. Also, while driving up and down a hill, the transmission assists and controls the driving performance and engine braking while corresponding to the road grade.

When more acceleration is required in “D” position, depress the accelerator pedal fully to the floor and hold that position. The transmission will automatically downshift. In this case, the transmission will operate like a conventional automatic transmission. When you release the pedal, the transmission will return to the original gear position.

To use the manual mode, move the lever from this position into the manual gate.

▽ While climbing a grade

When driving up a hill, undesired upshift is prevented from taking place when the accelerator is released. This minimizes the chance of subsequent downshifting to a lower gear when accelerating again. This prevents repeated upshifting and downshifting resulting in a smoother operation of the vehicle.

NOTE

The transmission may downshift, depending on the way the accelerator pedal is depressed to accelerate the vehicle again.

■ Shift lock function

The shift lock function helps prevent the improper operation of the select lever.

- The select lever cannot be operated unless the ignition switch is turned to the “ON” position and the brake pedal is depressed.
- The select lever cannot be moved from the “P” position to any other position before the brake pedal is depressed. Depress the brake pedal first, and then operate the select lever.
- Only the “P” position allows you to turn the key from the “ACC” position to the “LOCK” position and remove the key from the ignition key cylinder (models without “keyless access with push-button start system”).
- Only the “P” position allows you to turn the push-button ignition switch to the “OFF” position (models with “keyless access with push-button start system”).
- If the ignition switch is turned to the “LOCK”/“OFF” position while the select lever is in the “N” position, the select lever may not be moved to the “P” position after a period of time. Therefore, move the select lever to the “P” position with the brake pedal depressed soon after the ignition switch is turned to the “LOCK”/“OFF” position.

▼ Shift lock release

If the select lever cannot be operated, turn the ignition switch back to the “ON” position then move the select lever to the “P” position with the select lever button pressed and brake pedal depressed.

If the select lever does not move after performing the above procedure, perform the following steps.

- **When the select lever cannot be shifted from “P” to “N”:**

Refer to “Shift lock release using the shift lock release portion” ☞7-26.

- **When the select lever cannot be shifted from “N” to “R”, “P”:**

Within 60 seconds after placing the ignition switch in the “ACC” position, move the select lever to the “P” position with the select lever button pressed and brake pedal depressed.

If you must perform the above procedure, the shift lock system (or the vehicle control system) may be malfunctioning. Contact a

– CONTINUED –

SUBARU dealer for an inspection as soon as possible.

If the select lever does not move after performing the above procedure, refer to “Shift lock release using the shift lock release portion” ☞7-26.

▼ Shift lock release using the shift lock release portion

Perform the following procedure to release the shift lock.

1. Apply the parking brake and stop the engine.

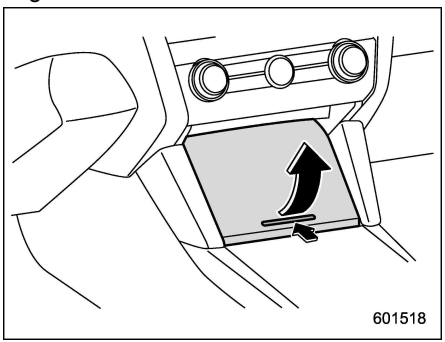

2. Open the lid of the pocket.

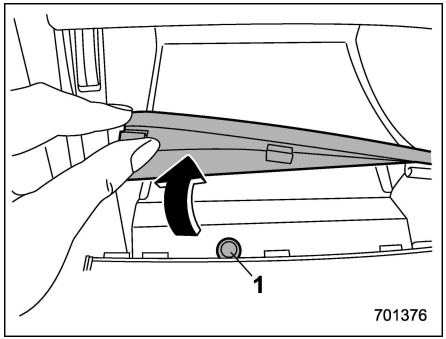

1) Hole

3. Turn over the inner trim of the pocket.

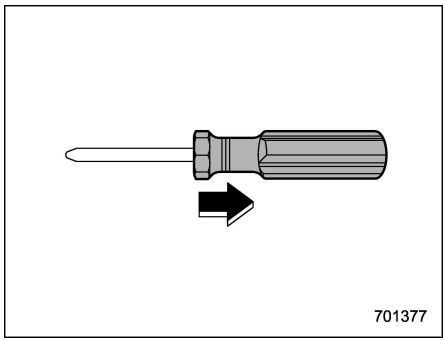

4. Remove the grip portion of the screwdriver.

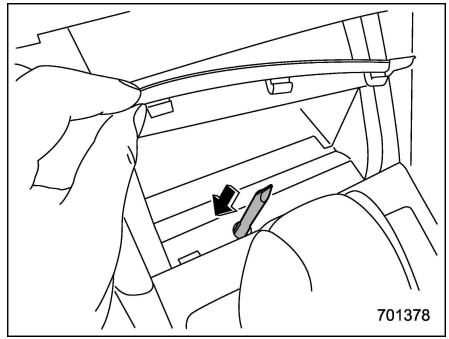

5. While depressing the brake pedal, insert the screwdriver into the hole, press the shift lock release portion using the screwdriver, and then move the select lever.

If the select lever does not move after performing the above procedure, the shift lock system may be malfunctioning. Contact a SUBARU dealer for an inspection as soon as possible.

■ Selection of manual mode

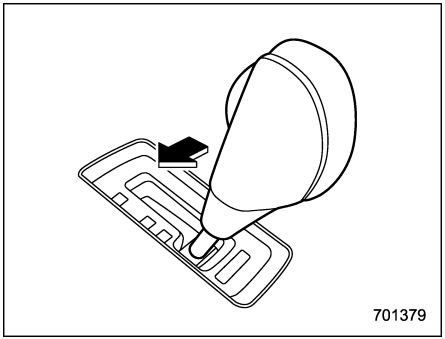

With the vehicle either moving or stationary, move the select lever from the “D” position to the “M” position to select the manual mode.

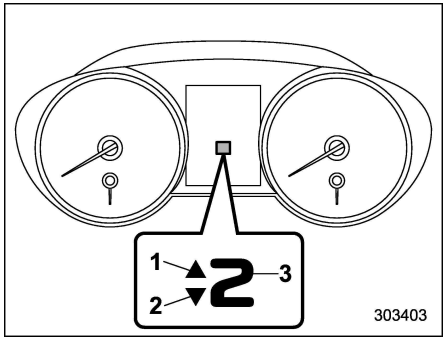

1) Upshift indicator
2) Downshift indicator
3) Gear position indicator

When the manual mode is selected, the gear position indicator and upshift indicator and/or downshift indicator on the combination meter illuminate. The gear position indicator shows the currently selected gear in the 1st-to-6th (3.6 L models)/7th (2.5 L models) gear range. The upshift and downshift indicators show when a gearshift is possible. When the upshift indicator “△” is on, upshifting is possible. When the downshift indicator “▽” is on, downshifting is possible. When both indicators are on, upshifting and downshifting are both possible. When the vehicle stops (for example, at traffic signals), the downshift indicator turns off.

Gearshifts can be performed using the shift paddle behind the steering wheel.

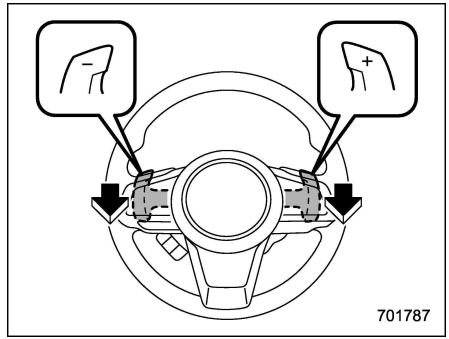

To upshift to the next higher gear position, pull the shift paddle that has “**+**” indicated on it. To downshift to the next lower gear position, pull the shift paddle that has “**–**” indicated on it.

To deselect the manual mode, return the select lever to the “D” position from the “M” position.

While driving with the select lever in the “D” position, if you change gears by operating the shift paddle, the gear position indicator light illuminates and shows the current gear condition.

⚠ CAUTION

Do not place or hang anything on the

– CONTINUED –

shift paddles. Doing so may result in accidental gear shifting.

NOTE

Please read the following points carefully and bear them in mind when using the manual mode.

- **If you attempt to shift down when the engine speed is too high, i.e., when a downshift would push the tachometer needle beyond the red zone, beeps will be emitted to warn you that the downshift is not possible.**
- **If you attempt to shift up when the vehicle speed is too low, the transmission will not respond.**
- **You can perform a skip-shift (for example, from 4th to 2nd) by operating the shift paddle twice in rapid succession.**
- **The transmission automatically selects 1st gear when the vehicle stops moving.**
- **If the temperature of the transmission fluid becomes too high, the "AT OIL TEMP" warning light will illuminate. Immediately stop the vehicle in a safe place and let the engine idle until the warning light turns off.**

■ Driving tips

NOTE

If the accelerator and brake pedals are depressed at the same time, driving torque may be restrained. This is not a malfunction.

- On a road surface where there is a risk of wheelspin (for example, a snow- or gravel-covered road), you can pull away from a standstill safely and easily by first selecting the 2nd gear of the manual mode.
- Always apply the foot or parking brake when the vehicle is stopped in the "D" or "R" position.
- Make sure to apply the parking brake when parking your vehicle. Do not hold the vehicle with only the transmission.
- Do not keep the vehicle in a stationary position on an uphill grade by using the "D" position. Use the brake instead.
- The engine may, on rare occasions, knock when the vehicle rapidly accelerates or rapidly pulls away from a standstill. This phenomenon does not indicate a malfunction.
- A slight reduction in output torque may occur in the models with a 3.6 L engine before the engine warms up.

Power steering

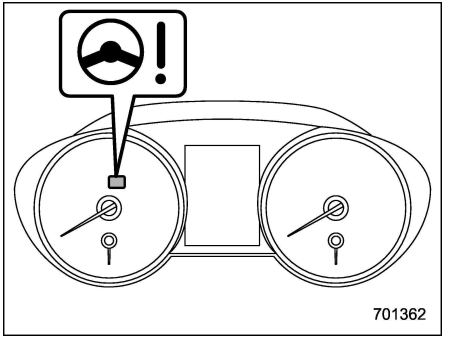

Power steering warning light

The vehicle is equipped with an electric power steering system. When the ignition switch is turned to the "ON" position, the power steering warning light on the combination meter illuminates to inform the driver that the warning system is functioning properly. Then, if the engine started, the warning light turns off to inform the driver that the steering power assist is operational.

⚠ CAUTION

While the power steering warning light is illuminated, there may be more resistance when the steering

wheel is operated. Drive carefully to the nearest SUBARU dealer and have the vehicle inspected immediately.

NOTE

If the steering wheel is operated in the following ways, the power steering control system may temporarily limit the power assist in order to prevent the system components, such as the control computer and drive motor, from overheating.

- **The steering wheel is operated frequently and turned sharply while the vehicle is maneuvered at extremely low speeds, such as while frequently turning the steering wheel during parallel parking.**
- **The steering wheel remains in the fully turned position for a long period of time.**

At this time, there will be more resistance when steering. However this is not a malfunction. Normal steering force will be restored after the steering wheel is not operated for a while and the power steering control system has an opportunity to cool down. However, if the power steering is operated in a non-standard way which causes power assist limitation to occur too frequently, this may result in a malfunction of the power steering control system.

Braking

■ Braking tips

⚠ WARNING

Never rest your foot on the brake pedal while driving. This can cause dangerous overheating of the brakes and needless wear on the brake pads and linings.

▼ When the brakes get wet

When driving in rain or after washing the vehicle, the brakes may get wet. As a result, brake stopping distance will be longer. To dry the brakes, drive the vehicle at a safe speed while lightly depressing the brake pedal to heat up the brakes.

▼ Use of engine braking

Remember to make use of engine braking in addition to foot braking. When descending a grade, if only the foot brake is used, the brakes may start working improperly because of brake fluid overheating, caused by overheated brake pads. To help prevent this, shift into a lower gear to get stronger engine braking.

▼ Braking when a tire is punctured

Do not depress the brake pedal suddenly when a tire is punctured. This could cause

– CONTINUED –

a loss of control of the vehicle. Keep driving straight ahead while gradually reducing speed. Then slowly pull off the road to a safe place.

■ Brake system

▼ Two separate circuits

Your vehicle has a dual circuit brake system. Each circuit works diagonally across the vehicle. If one circuit of the brake system should fail, the other half of the system still works. If one circuit fails, the brake pedal will go down much closer to the floor than usual and you will need to press it down much harder. And a much longer distance will be needed to stop the vehicle.

▼ Brake booster

The brake booster uses engine manifold vacuum to assist braking force. Do not turn off the engine while driving because that will turn off the brake booster, resulting in poor braking power.

The brakes will continue to work even when the brake booster completely stops functioning. If this happens, however, you will have to depress the pedal much harder than normal and the braking distance will increase.

▼ Brake assist system

⚠ WARNING

Do not be overconfident about the brake assist. It is not a system that brings more braking ability to the vehicle beyond its braking capability. Always use the utmost care when driving regarding vehicle speed and safe distance.

⚠ CAUTION

When you need to brake suddenly, continue depressing the brake pedal strongly to bring the effect of the brake assist.

Brake assist is a driver assistance system. It assists the brake power when the driver cannot depress the brake pedal strongly and the brake power is insufficient.

Brake assist generates the brake power according to the speed at which the driver depresses the brake pedal.

NOTE

When you depress the brake pedal strongly or suddenly, the following phenomena occur. However, even though these occur, they do not indicate any malfunctions, and the brake assist system is operating properly.

- **You might feel that the brake pedal is applied by lighter force and generates a greater braking force.**
- **You might hear the sound of ABS operating from the engine compartment.**

■ Disc brake pad wear warning indicators

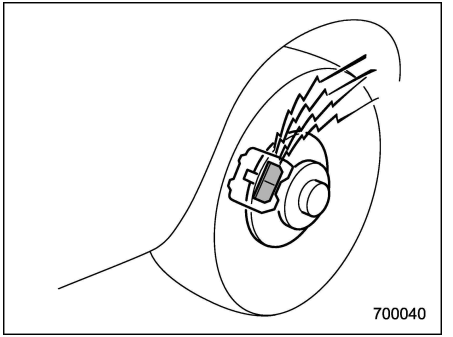

The disc brake pad wear warning indicators on the disc brakes give a warning noise when the brake pads are worn.

If a squeaking or scraping noise is heard from the disc brakes while braking, immediately have your vehicle inspected by the nearest SUBARU dealer.

ABS (Anti-lock Brake System)

⚠ WARNING

Always use the utmost care in driving – overconfidence because you are driving with an ABS equipped vehicle could easily lead to a serious accident.

⚠ CAUTION

- **The ABS does not always decrease stopping distance. You should always maintain a safe following distance from other vehicles.**
- **When driving on badly surfaced roads, gravel roads, icy road, or over deep newly fallen snow, stopping distances may be longer for a vehicle with the ABS than one without. When driving under these conditions, therefore, reduce your speed and leave ample distance from other vehicles.**
- **When you feel the ABS operating, you should maintain constant brake pedal pressure. Do not pump the brake pedal since doing so may defeat the operation of the ABS.**

The ABS prevents the lock-up of wheels which may occur during sudden braking or braking on slippery road surfaces. This helps prevent the loss of steering control and directional stability caused by wheel lock-up.

When the ABS is operating, you may hear a chattering noise or feel a slight vibration in the brake pedal. This is normal when the ABS operates.

The ABS will not operate when the vehicle speed is below approximately 6 mph (10 km/h).

■ ABS self-check

You may feel a slight shock in the brake pedal and hear the operating noise of the ABS from the engine compartment just after the vehicle is started. This is caused by an automatic functional test of the ABS being carried out and does not indicate any abnormal condition.

■ ABS warning light

Refer to “ABS warning light” ☞3-18.

Electronic Brake Force Distribution (EBD) system

The EBD system maximizes the effectiveness of the brakes by allowing the rear brakes to supply a greater proportion of the braking force. It functions by adjusting the distribution of braking force to the rear wheels in accordance with the vehicle’s loading condition and speed.

The EBD system is an integral part of the ABS and uses some of the ABS components to perform its function of optimizing the distribution of braking force. If any of the ABS components used by the EBD function fails, the EBD system also stops working.

When the EBD system is operating, you may hear a chattering noise or feel a slight vibration in the brake pedal. This is normal and does not indicate a malfunction.

– CONTINUED –

■ Steps to take if EBD system malfunctions

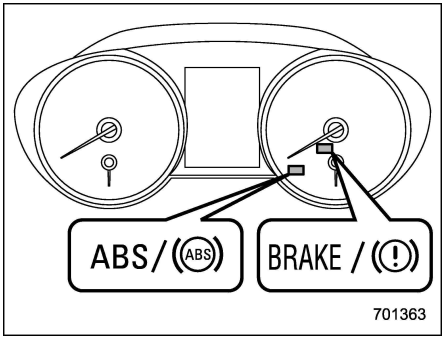

If a malfunction occurs in the EBD system, the system stops working and the brake system warning light and ABS warning light illuminate simultaneously.

The EBD system may be malfunctioning if the brake system warning light and ABS warning light illuminate simultaneously during driving.

Even if the EBD system fails, the conventional braking system will still function. However, the rear wheels will be more prone to locking when the brakes are applied harder than usual and the vehicle's motion may therefore become somewhat harder to control.

If the brake system warning light and ABS warning light illuminate simultaneously, take the following steps.

1. Stop the vehicle in the nearest safe, flat location.
2. Apply the parking brake and turn off the engine.
3. Restart the engine.
4. Release the parking brake.

Even if both warning lights turn off:

The EBD system may be malfunctioning. Drive carefully to the nearest SUBARU dealer and have the system inspected.

If both warning lights illuminate again and remain illuminated after restarting the engine:

1. Turn off the engine again.
2. Apply the parking brake.
3. Check the brake fluid level. For details about checking the brake fluid level, refer to "Checking the fluid level" ☞11-19.

- If the brake fluid level is not below the "MIN" mark, the EBD system may be malfunctioning. Drive carefully to the nearest SUBARU dealer and have the system inspected.
- If the brake fluid level is below the "MIN" mark, DO NOT drive the vehicle. Instead, have the vehicle towed to the nearest SUBARU dealer for repair.

⚠ WARNING

- **Driving with the brake system warning light on is dangerous. This indicates your brake system may not be working properly. If the light remains on, have the brakes inspected by a SUBARU dealer immediately.**
- **If at all in doubt about whether the brakes are operating properly, do not drive the vehicle. Have your vehicle towed to the nearest SUBARU dealer for repair.**

Vehicle Dynamics Control system

WARNING

Always use the utmost care in driving – overconfidence because you are driving with a Vehicle Dynamics Control system equipped vehicle could easily lead to a serious accident.

CAUTION

- **Even if your vehicle is equipped with Vehicle Dynamics Control system, winter tires should be used when driving on snow-covered or icy roads; in addition, vehicle speed should be reduced considerably. Simply having a Vehicle Dynamics Control system does not guarantee that the vehicle will be able to avoid accidents in any situation.**
- **Activation of the Vehicle Dynamics Control system is an indication that the road being travelled on has a slippery surface; since having Vehicle Dynamics Control is no guarantee that full vehicle control will be maintained at all times and under all conditions, its activation should be seen as a sign that the speed of the vehicle should be reduced considerably.**
- **Whenever suspension components, steering components, or an axle are removed from a vehicle equipped with the Vehicle Dynamics Control system, have an inspection of that system performed by an authorized SUBARU dealer.**
- **The following precautions should be observed in order to ensure that the Vehicle Dynamics Control system is operating properly.**
  - **All four wheels should be fitted with tires of the same size, type, and brand. Furthermore, the amount of wear should be the same for all four tires.**
  - **Keep the tire pressure at the proper level as shown on the vehicle placard attached to the driver's side door pillar.**
  - **When replacing a flat tire, use only the specified temporary spare tire shown on the tire placard. However, even with the specified temporary spare tire, the effectiveness of the Vehicle Dynamics Control system will be reduced.**
- **If non-matching tires are used, the Vehicle Dynamics Control system may not operate correctly.**

In the event of wheelspin and/or skidding on a slippery road surface and/or during cornering and/or an evasive maneuver, the Vehicle Dynamics Control system adjusts the engine's output and the wheels' respective braking forces to help maintain traction and directional control.

- **Traction Control Function**

The traction control function is designed to prevent spinning of the driving wheels on slippery road surfaces, thereby helping to maintain traction and directional control. Activation of this function is indicated by flashing of the Vehicle Dynamics Control operation indicator light.

- **Skid Suppression Function**

The skid suppression function is designed to help maintain directional stability by suppressing the wheels' tendency to slide sideways during steering operations. Acti-

– CONTINUED –

vation of this function is indicated by flashing of the Vehicle Dynamics Control operation indicator light.

NOTE

- **The Vehicle Dynamics Control system may be considered normal when the following conditions occur.**
  - **– Slight twitching of the brake pedal is felt.**
  - **– The vehicle or steering wheel shakes to a small degree.**
  - **– An operating noise from the engine compartment is heard briefly when starting the engine and when driving off after starting the engine.**
  - **– The brake pedal seems to jolt when driving off after starting the engine.**
- **In the following circumstances, the vehicle may be less stable than it feels to the driver. The Vehicle Dynamics Control System may therefore operate. Such operation does not indicate a system malfunction.**
  - **– on gravel-covered or rutted roads**
  - **– on unfinished roads**
  - **– when the vehicle is towing a trailer (Outback)**
  - **– when the vehicle is fitted with snow tires or winter tires**
- **Activation of the Vehicle Dynamics Control system will cause operation of the steering wheel to feel slightly different compared to that for normal conditions.**
- **It is always important to reduce speed when approaching a corner, even if the vehicle is equipped with Vehicle Dynamics Control.**
- **Always turn off the engine before replacing a tire as failure to do so may render the Vehicle Dynamics Control system unable to operate correctly.**

■ Vehicle Dynamics Control system monitor

Refer to “Vehicle Dynamics Control warning light/Vehicle Dynamics Control operation indicator light” ☞3-23 and “Vehicle Dynamics Control OFF indicator light” ☞3-24.

■ Vehicle Dynamics Control OFF switch

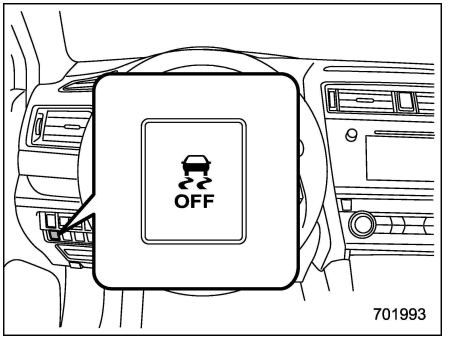

Pressing the Vehicle Dynamics Control OFF switch deactivates the Vehicle Dynamics Control system.

Creating an adequate driving wheel slip by deactivating the Vehicle Dynamics Control system temporarily may help to escape from the following situations. Use the Vehicle Dynamics Control OFF switch as necessary.

- a standing start on a steeply sloping road with a snowy, gravel-covered, or otherwise slippery surface
- extrication of the vehicle when its wheels are stuck in mud or deep snow

When the switch is pressed during engine

operation, the Vehicle Dynamics Control OFF indicator light on the combination meter illuminates. The Vehicle Dynamics Control system will be deactivated. When the switch is pressed again to reactivate the Vehicle Dynamics Control system, the Vehicle Dynamics Control OFF indicator light turns off.

You should not deactivate the Vehicle Dynamics Control system except under the above-mentioned situations.

CAUTION

The Vehicle Dynamics Control system helps prevent unstable vehicle motion such as skidding using control of the brakes and engine power. Do not turn off the Vehicle Dynamics Control system unless it is absolutely necessary. If you must turn off the Vehicle Dynamics Control system, drive very carefully based on the road surface condition.

NOTE

- **When the switch has been pressed to deactivate the Vehicle Dynamics Control system, the Vehicle Dynamics Control system automatically reactivates itself the next time the ignition switch is turned to the "LOCK"/"OFF" position and the engine is restarted.**
- **If the switch is held down for 30 seconds or longer, the indicator light turns off, the Vehicle Dynamics Control system is activated, and the system ignores any further pressing of the switch. To make the switch usable again, turn the ignition switch to the "LOCK"/"OFF" position and restart the engine.**
- **When the switch is pressed to deactivate the Vehicle Dynamics Control system, the vehicle's running performance is comparable with that of a vehicle that does not have a Vehicle Dynamics Control system. Do not deactivate the Vehicle Dynamics Control system except when absolutely necessary.**
- **Even when the Vehicle Dynamics Control system is deactivated, components of the brake control system may still activate. When the brake control system is activated, the Vehicle Dynamics Control operation indicator light illuminates.**

X-mode (Outback)

WARNING

- **Always use the utmost care in driving – overconfidence because you are driving a vehicle with X-mode could easily lead to a serious accident.**
- **Always use the utmost care in driving – overconfidence because you are driving a vehicle with hill descent control function could easily lead to a serious accident. Be especially careful, and depress the brake pedal if necessary when driving on extremely steep downhill, frozen, muddy or sandy roads. Failure to control the vehicle's speed may cause a loss of control and result in a serious accident.**

CAUTION

- **Even if your vehicle is equipped with X-mode, winter tires should be used when driving on snow-covered or icy roads; in addition, vehicle speed should be reduced considerably. Simply having X-**

– CONTINUED –

mode does not guarantee that the vehicle will be able to avoid accidents in any situation.

- **Activate the X-mode when you encounter a very slippery surface at low speed. However, having X-mode is no guarantee that full vehicle control will be maintained at all times and under all conditions. When activating X-mode, the speed of the vehicle should be reduced considerably.**
- **Whenever suspension components, steering components, or an axle are removed from a vehicle, have the system inspected by an authorized SUBARU dealer.**
- **Observe the following precautions in order to ensure that the X-mode is operating properly:**
  - **All four wheels should be fitted with tires of the same size, type, and brand. Furthermore, the amount of wear should be the same for all four tires.**
  - **Keep the tire pressure at the proper level as shown on the label attached to the vehicle's door pillar.**
  - **When replacing a flat tire, use only the specified temporary spare tire shown on the tire placard. However, even with the specified temporary spare tire, the effectiveness of the X-mode will be reduced and this should be taken into account when driving the vehicle in such a condition.**
- **If the hill descent control function has operated continuously for a long time, the temperature of the brake disc may increase and the hill descent control function may be temporarily disabled. In this case, the hill descent control indicator will disappear. When the hill descent control indicator disappears, the hill descent control function is disabled.**

X-mode is the integrated control system of the engine, AWD and Vehicle Dynamics Control system, etc. for driving with bad road conditions. Using X-mode, you can drive more comfortably even in slippery road conditions including uphill and downhill.

X-mode has the following functions.

- **Hill descent control function:**

Using the hill descent control function, you can keep the vehicle at a consistent speed driving downhill. If the vehicle speed is likely to increase, the brake control system will be activated to adjust the vehicle speed.

- **Driving ability control:**

This mode increases the hill-climbing ability and driving ability as well as enabling smooth application of torque for easier control of the steering wheel.

■ To activate/deactivate the X-mode

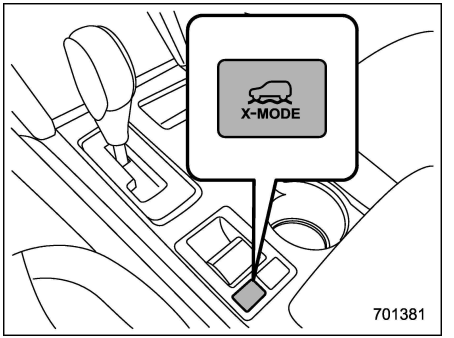

X-mode switch

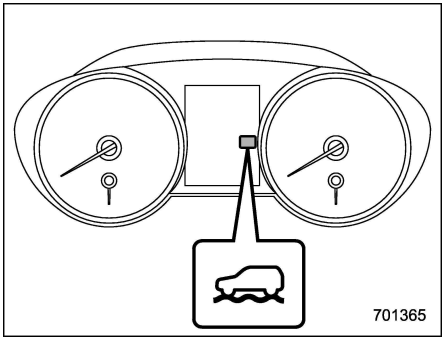

X-mode indicator

To activate:

Press the X-mode switch. While the X-mode is activated, the X-mode indicator appears.

To deactivate:

Press the X-mode switch again. The X-mode indicator will disappear when the X-mode is deactivated.

NOTE

- **Even if you try to activate the X-mode by pressing the X-mode switch when the vehicle speed is 12 mph (20 km/h) or more, the X-mode will not be activated. At this time, a buzzer will sound twice.**
- **If the vehicle speed reaches 25 mph (40 km/h) or more while the X-mode is activated, a buzzer will sound once and the X-mode will be deactivated.**
- **While the engine is running, if any of the following conditions is met, the X-mode will be deactivated. In this case, it is not possible to activate the X-mode.**
  - **– The CHECK ENGINE warning light/malfunction indicator light illuminates.**
  - **– The AT OIL TEMP warning light flashes.**
  - **– The ABS warning light illuminates.**
  - **– The Vehicle Dynamics Control warning light illuminates.**
- **If the engine could overheat because of a temperature increase of the engine coolant, it may not be possible to activate the X-mode. Even while the X-mode is activated, the X-mode will be deactivated when the engine coolant temperature increases.**

■ Hill descent control function

The hill descent control function will be in standby mode when the X-mode is activated and the vehicle speed is less than approximately 12 mph (20 km/h).

The function will operate when the vehicle speed is less than approximately 12 mph (20 km/h) and the accelerator ratio is less than approximately 10%.

The function will turn off when the vehicle speed is more than approximately 12 mph (20 km/h) and the accelerator pedal is depressed.

⚠ CAUTION

The braking power of the hill descent control function may not be sufficient when strong braking power is needed (e.g., when towing a trailer (Outback)).

NOTE

- **Even while the hill descent control function is operating, you can vary the vehicle speed by using the brake pedal or accelerator pedal.**
- **During braking by the hill descent control function, the hill descent control indicator will flash.**
- **The hill descent control function is operable regardless of the gradient of the road.**
- **The hill descent control function may be considered normal when the following conditions occur.**
  - **– An operating sound is heard briefly from the engine compartment while the hill descent control**

– CONTINUED –

function is operating.
– The sensation of depressing the brake pedal is different, (harder than usual etc.) when the brake pedal is depressed during hill descent control function operation.

▼ **Hill descent control indicator**

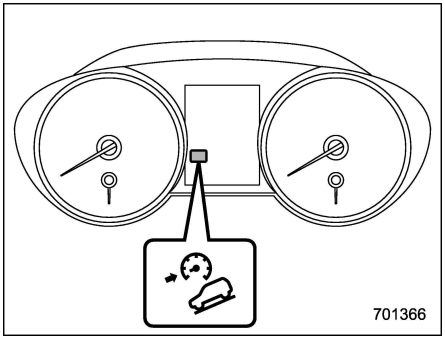

This indicator appears while the hill descent control function is in the standby mode. It flashes while the function is operating. It will disappear when the function is in the disabled mode. When this function is changed from operational to non-operational, it will disappear when the vehicle speed reaches more than approximately 18 mph (30 km/h).

Tire pressure monitoring system (TPMS) (if equipped)

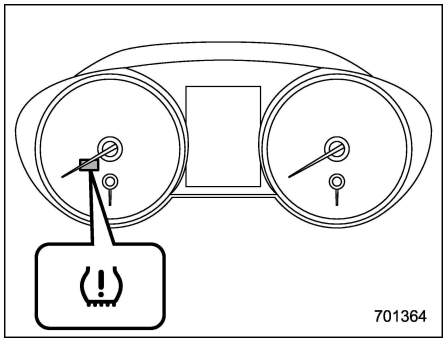

Low tire pressure warning light

The tire pressure monitoring system provides the driver with a warning message by sending a signal from a sensor that is installed in each wheel when tire pressure is severely low.

The tire pressure monitoring system will activate only when the vehicle is driven at speeds above 20 mph (32 km/h). Also, this system may not react immediately to a sudden drop in tire pressure (for example, a blow-out caused by running over a sharp object).

⚠ WARNING

- **If the low tire pressure warning light illuminates while driving, never brake suddenly. Instead, perform the following procedure. Otherwise an accident involving serious vehicle damage and serious personal injury could occur.**
  (1) Keep driving straight ahead while gradually reducing speed.
  (2) Slowly pull off the road to a safe place.
  (3) Check the pressure for all four tires and adjust the pressure to the COLD tire pressure shown on the vehicle placard on the door pillar on the driver's side.

  Even when the vehicle is driven a very short distance, the tires get warm and their pressures increase accordingly. Be sure to let the tires cool thoroughly before adjusting their pressures to the standard values shown on the tire placard. Refer to "Tires and wheels" ☞11-22. The tire pressure monitoring system does not function when the vehicle is sta-

tionary. After adjusting the tire pressures, increase the vehicle speed to at least 20 mph (32 km/h) to start the TPMS rechecking of the tire inflation pressures. If the tire pressures are now above the severe low pressure threshold, the low tire pressure warning light should turn off a few minutes later.

If this light still illuminates while driving after adjusting the tire pressure, a tire may have significant damage and a fast leak that causes the tire to lose air rapidly. If you have a flat tire, replace it with a spare tire as soon as possible.

- When a spare tire is mounted or a wheel rim is replaced without the original pressure sensor/transmitter being transferred, the low tire pressure warning light will illuminate steadily after blinking for approximately one minute. This indicates the TPMS is unable to monitor all four road wheels. Contact your SUBARU dealer as soon as possible for tire and sensor replacement and/or system resetting.
- When a tire is repaired with liquid sealant, the tire pressure warning valve and transmitter may not operate properly. If a liquid sealant is used, contact your nearest SUBARU dealer or other qualified service shop as soon as possible. Make sure to replace the tire pressure warning valve and transmitter when replacing the tire. You may reuse the wheel if there is no damage to it and if the sealant residue is properly cleaned off. Do not inject any tire liquid or aerosol tire sealant into the tires, as this may cause a malfunction of the tire pressure sensors. If the light illuminates steadily after blinking for approximately one minute, promptly contact a SUBARU dealer to have the system inspected.

⚠ CAUTION

Do not place metal film or any metal parts under the driver's seat. This may cause poor reception of the signals from the tire pressure sensors, and the tire pressure monitoring system will not function properly.

FCC ID: CWTD1G049

NOTE

This device complies with part 15 of the FCC Rules. Operation is subject to the following two conditions: (1) This device may not cause harmful interference, and (2) this device must accept any interference received, including interference that may cause undesired operation.

FCC CAUTION

Changes or modifications not expressly approved by the party responsible for compliance could void the user's authority to operate the equipment.

– CONTINUED –

■ TPMS screen

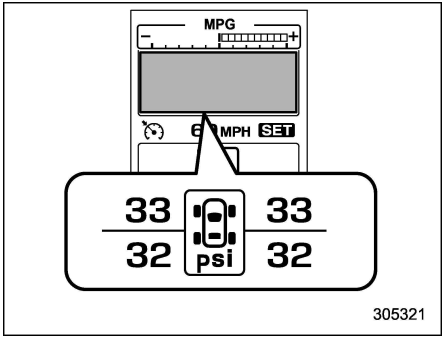

This screen displays each tire pressure. Refer to “Basic screens” ☞3-36.

Parking your vehicle

⚠ WARNING

- **Never leave unattended children or pets in the vehicle. They could accidentally injure themselves or others through inadvertent operation of the vehicle. Also, on hot or sunny days, the temperature in a closed vehicle could quickly become high enough to cause severe or possibly fatal injuries to them.**
- **Do not park the vehicle over flammable materials such as dry grass, waste paper or rags, as they may burn easily if they come near hot engine or exhaust system parts.**
- **Be sure to stop the engine if you take a nap in the vehicle. If engine exhaust gas enters the passenger compartment, occupants in the vehicle could die from carbon monoxide (CO) contained in the exhaust gas.**

■ Electronic parking brake

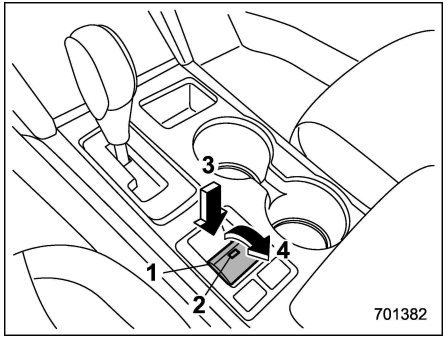

1) Parking brake switch
2) Indicator light
3) Release the electronic parking brake
4) Apply the electronic parking brake

⚠ WARNING

- **Before exiting the vehicle, make sure that you turn off the engine. Otherwise, the parking brake may be released and an accident may occur.**
- **If the brake system warning light turns on, the electronic parking brake system may be malfunctioning. Immediately stop your vehicle in a safe location, use tire stops under the tires to prevent the vehicle from moving and contact your SUBARU dealer.**
- **If the electronic parking brake is operated under the following conditions, the electronic parking brake indicator light may flash.**
  - **the brake is overheated**
  - **the vehicle is on a steep slope**

  In such cases, the vehicle may start to move which may lead to an accident. Always use the tire stops.

⚠ CAUTION

- **When the electronic parking brake cannot be applied due to a malfunction, contact your SUBARU dealer immediately for an inspection. If you have to park your vehicle in such conditions, perform the following procedure.**
  - **Stop your vehicle in a flat location.**
  - **Shift the select lever in the "P" position. When the select lever cannot be shifted into the "P" position, you must release shift lock. Refer to "Shift lock function" ☞7-25.**
  - **Use tire stops under the tires to prevent the vehicle from moving.**
- **Never drive with the parking brake applied in order to avoid unnecessary wear on the brake linings. Before starting to drive, always make sure that the parking brake has been released and that the electronic parking brake indicator light has turned off.**
- **The braking power of the electronic parking brake may not be sufficient when strong braking power is needed (e.g., when parking on a steep slope while towing a trailer (Outback)).**

Your vehicle is equipped with an electronic parking brake. You can apply/release the parking brake by operating the parking brake switch.

To apply: Depress the brake pedal and pull up the parking brake switch.

To release: Press the parking brake switch firmly while the ignition switch is in the "ON" position and the brake pedal is depressed.

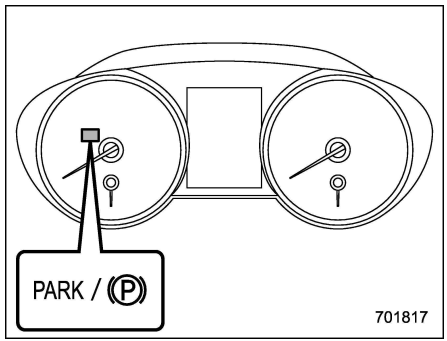

Electronic parking brake indicator light

When the parking brake is applied while the ignition switch is in the "ON" position, the following indicator lights illuminate.

– CONTINUED –

- the indicator light on the parking brake switch
- the electronic parking brake indicator light on the combination meter (for details, refer to "Electronic parking brake indicator light" ☞3-20.)

NOTE

- The parking brake will not be released under the following conditions even if the parking brake switch is pressed.
  – The ignition switch is in the "ACC" or "LOCK"/"OFF" position.
  – The brake pedal is not depressed.
- The electronic parking brake system uses motors to apply the parking brake. Therefore, operating sounds from the motors will be heard when applying or releasing the parking brake. Make sure that the motor sounds are heard when applying or releasing the parking brake.
- When the electronic parking brake system has a malfunction or the electronic parking brake operation is prohibited temporarily, if the parking brake switch is operated, a chirp sound is heard and the electronic parking brake indicator light flashes.
- When you cannot release the parking brake due to, for example, a system malfunction, contact your SUBARU dealer and have your SUBARU dealer release the parking brake.
- If the operation of the electronic parking brake switch is stopped midway or performed extremely slowly, the system may detect an error and turn on the brake system warning light. However, this does not indicate a malfunction if the warning light turns off after operating the switch.
- When the electronic parking brake has not been used for a long period of time, the electronic parking brake may operate automatically after the ignition switch is turned to the "LOCK"/"OFF" position. This occurs due to checking the proper operation of the electronic parking brake and does not indicate a malfunction.
- If the electronic parking brake switch is malfunctioning and the electronic parking brake cannot be released, refer to the instructions described in "Automatic release function by accelerator pedal" ☞7-42.
- After activating the electronic parking brake, you may hear a short sound several minutes after the electronic parking brake indicator light and the indicator light on the electronic parking brake switch illuminate as the system confirms proper engagement. This sound is different from the apply and release sound.
This can occur:
  – If the brakes are extremely hot.
  – If the car is parked on a steep incline.
  – If the electronic parking brake is applied after the ignition switch is turned OFF.

This is a normal operating sound under any of these conditions.

▼ Automatic release function by accelerator pedal

The electronic parking brake system has an automatic release function. The parking brake will be automatically released by depressing the accelerator pedal. However, the automatic release function does not operate under the following conditions.

- Any door (other than the trunk lid or rear gate) is open.
- The driver's seatbelt is not fastened.

If the parking brake is automatically released, the electronic parking brake indicator light and the indicator light on the parking brake switch turn off.

NOTE

Even if you have applied the parking brake, the parking brake will be automatically released when the accelerator pedal is depressed.

▼ Hill Holder function

The electronic parking brake system has a Hill Holder function. If the Hill Holder function is activated, the parking brake will be automatically applied when stopping on an uphill slope with the brake pedal depressed. In this case, the electronic parking brake indicator light and the indicator light on the parking brake switch illuminate.

The Hill Holder function also operates while driving uphill in reverse.

NOTE

- **The Hill Holder function may not activate on a gentle uphill slope. In this case, manually apply the electronic parking brake.**
- **If you do not depress the brake pedal sufficiently, the Hill Holder function may not operate properly. However, this is not a malfunction. When stopping on an uphill slope, depress the brake pedal firmly and release it after the electronic parking brake indicator light illuminates.**
- **Depending on the condition of the road surface and braking force, the brakes operate temporarily and feel different than usual.**
- **When the electronic parking brake system has a malfunction while the Hill Holder function is activated, a chirp sound is heard, the Hill Holder indicator light turns off and the brake system warning light turns on.**
- **When the hill holder activates on a slope, the electronic parking brake is engaged. The electronic parking brake will release when you accelerate from the stop. If you manually release the electronic parking brake while the hill holder is activated, the hill holder function is canceled and will not re-engage until the vehicle has moved some distance. In that case, you will need to manually engage the electronic parking brake if needed.**

▽ Hill Holder switch

⚠ WARNING

When stopping on an uphill slope with the Hill Holder function activated, release the brake pedal after the electronic parking brake indicator light has illuminated. Otherwise, the Hill Holder function may not operate properly and an accident may occur.

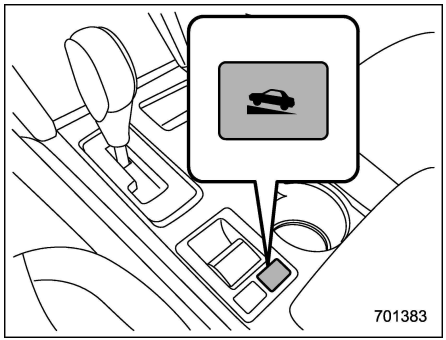

You can activate/deactivate the Hill Holder function by pressing the Hill Holder switch.

Deactivate the Hill Holder function under the following conditions.

- When towing a trailer (Outback)

– CONTINUED –

- When carrying a heavy load
- When you do not frequently use the parking brake when stopping on an uphill slope

NOTE

- **If the Hill Holder switch is pressed for more than 30 seconds, the Hill Holder indicator light turns off and the system ignores any further pressing of the switch. To activate the switch again, turn the ignition switch to the "LOCK"/ "OFF" position and restart the engine.**
- **When the Hill Holder function is deactivated while the Hill Holder function has a malfunction, if you press the Hill Holder switch, a chirp sounds.**

▽ **Hill Holder indicator light**

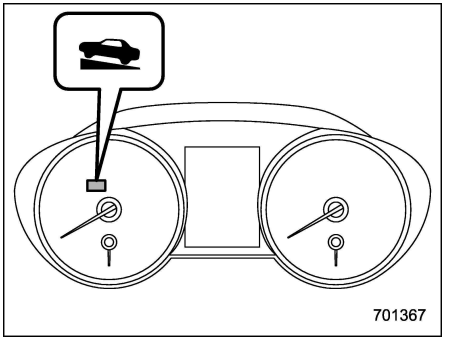

When the Hill Holder function is activated, the Hill Holder indicator light illuminates. Refer to "Hill Holder indicator light" ☞3-21.

▼ **Emergency brake**

⚠ CAUTION

Use the emergency brake only in case of an emergency. If the emergency brake is excessively used, the brake parts will wear down faster or the brake may not work sufficiently due to brake overheating.

NOTE

- **While using the emergency brake, the electronic parking brake indicator light and the indicator light on the parking brake switch illuminate and a chirp sounds.**
- **While using the emergency brake, a sound may be heard from the engine compartment. This is the operating sound of the brake that is activated by the Vehicle Dynamics Control system, and does not indicate a malfunction.**

If the foot brake has a malfunction, you can stop the vehicle by pulling the parking brake switch continuously.

While applying the emergency brake, the electronic parking brake indicator light and the indicator light on the parking brake switch illuminate and a chirp sounds.

▼ **Electronic parking brake system warning**

⚠ CAUTION

If the brake system warning light turns on, the electronic parking brake system may be malfunctioning. Immediately stop your vehicle in the nearest safe location and contact your SUBARU dealer.

If a malfunction occurs in the electronic

parking brake system, the brake system warning light turns on. Refer to “Electronic parking brake system warning” ☞3-20.

■ Parking tips

When parking your vehicle, always perform the following items.

- Apply the parking brake.
- Place the select lever in the “P” (Park) position.

Never rely on the transmission alone to hold the vehicle.

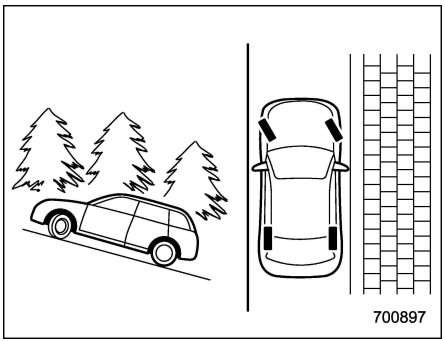

When parking on a hill, always turn the steering wheel as described here. When the vehicle is headed up the hill, the front wheels should be turned away from the curb.

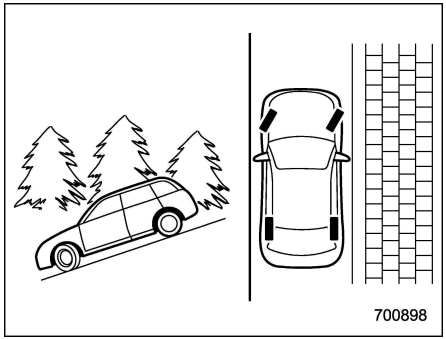

When facing downhill, the front wheels should be turned into the curb.

Cruise control

NOTE

For models with EyeSight system: Refer to the Owner’s Manual supplement for the EyeSight system.

Cruise control enables you to maintain a constant vehicle speed without holding your foot on the accelerator pedal and it is operative when the vehicle speed is 20 mph (30 km/h) or more.

⚠ WARNING

Do not use the cruise control under any of the following conditions. These may cause loss of vehicle control.

- **driving up or down a steep grade**
- **driving on slippery or winding roads**
- **driving in heavy traffic**
- **towing a trailer (Outback)**

NOTE

Make sure the cruise control system is turned off when the cruise control is not in use to avoid unintentionally setting of the cruise control.

– CONTINUED –

■ To set cruise control

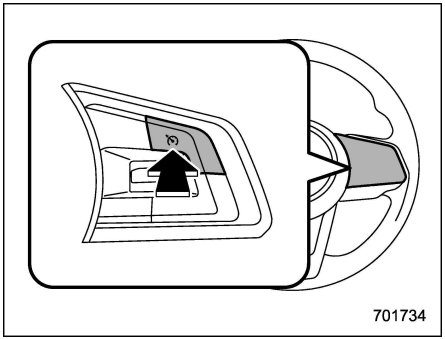

Cruise control main button

1. Press the cruise control main button.

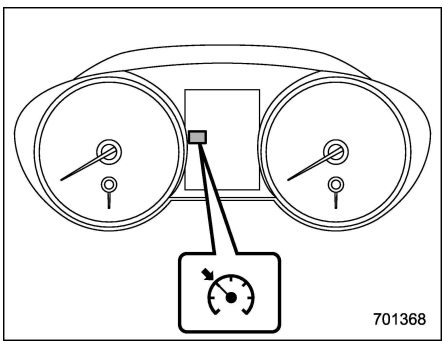

Cruise control indicator

The cruise control indicator on the combination meter will appear.

2. Depress the accelerator pedal until the vehicle reaches the desired speed.

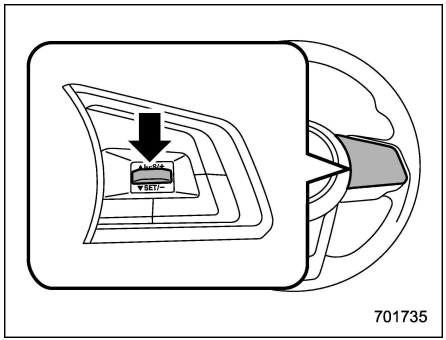

3. Press the “RES/SET” switch to the “SET” side and release it. Then release the accelerator pedal.

NOTE

When setting a cruise speed for the first time during a drive, both “SET” and “RES” may be used to set the initial cruise speed.

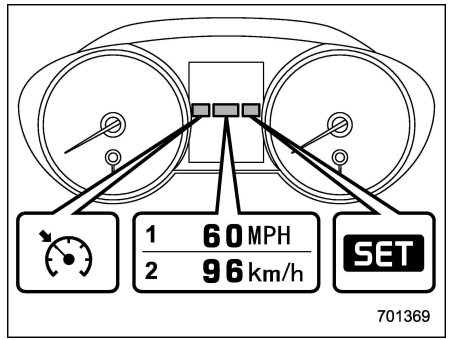

Cruise control set indicator

1) When setting the displayed unit as “MPH”.
2) When setting the displayed unit as “km/h”.

At this time, the cruise control set indicator appears in the combination meter. The set speed will be shown on the combination meter. You can change the displayed unit by operating the multi information display. For details, refer to “Units” ☞3-43.

The vehicle will maintain the desired speed.

Vehicle speed can be temporarily increased while driving with the cruise control activated. Simply depress the accelerator pedal to accelerate the vehicle. When the accelerator pedal is released, the vehicle will return to and

maintain the previous cruising speed.

■ To temporarily cancel the cruise control

The cruise control can be temporarily canceled in the following ways.

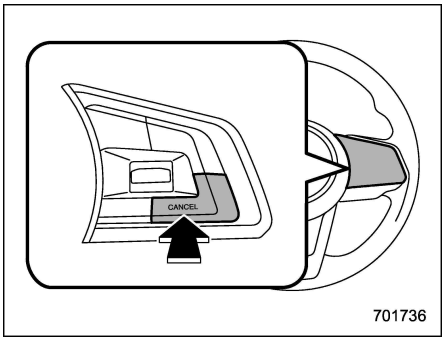

- Press the “CANCEL” button.
- Press the X-mode switch to activate the X-mode (models with X-mode).
- Depress the brake pedal.

⚠ WARNING

Do not place the select lever in the “N” position while driving. If the select lever is shifted into the “N” position, cruise control can be canceled but the engine brake will no longer work. This could result in an accident.

The cruise control set indicator in the combination meter disappears when the cruise control is canceled.

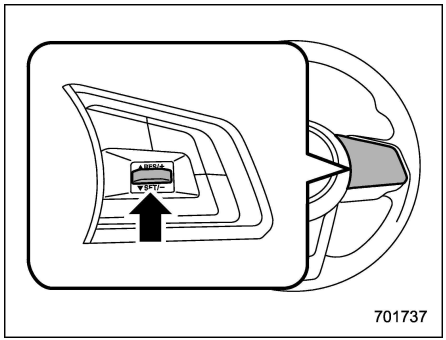

To resume the cruise control after it has been temporarily canceled and with vehicle speed of approximately 20 mph (30 km/h) or more, press the “RES/SET” switch to the “RES” side to return to the original cruising speed automatically.

The cruise control set indicator in the combination meter will automatically appear at this time.

■ To turn off the cruise control

There are two ways to turn off the cruise control:

- Press the cruise control main button again.
- Turn the ignition switch to the “ACC” or “LOCK”/“OFF” position (but only when the vehicle is completely stopped).

■ To change the cruising speed

▼ To increase the speed (by the “RES/SET” switch)

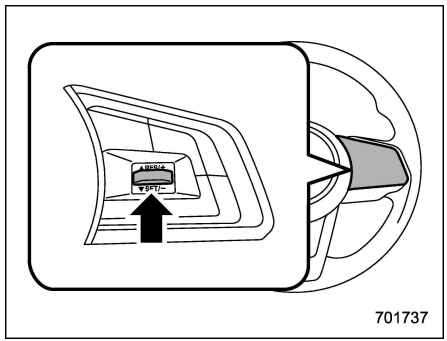

Press the “RES/SET” switch to the “RES” side and hold it until the vehicle reaches the desired speed. Then, release the switch. The vehicle speed at that moment will be memorized and treated as the new set speed.

– CONTINUED –

When setting the displayed unit as "MPH":

The set speed can be increased 1 mph (1.6 km/h) each time by pressing the "RES/SET" switch to the "RES" side.

When setting the displayed unit as "km/h":

The set speed can be increased 1 km/h each time by pressing the "RES/SET" switch to the "RES" side.

▼ **To increase the speed (by accelerator pedal)**

1. Depress the accelerator pedal to accelerate the vehicle to the desired speed.

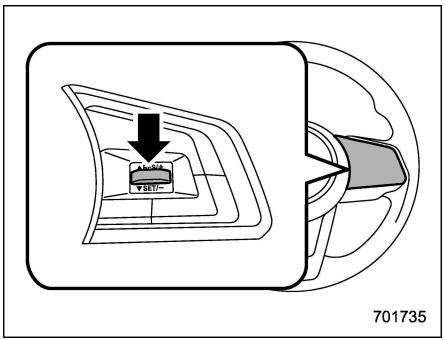

2. Press the "RES/SET" switch to the "SET" side once. Now the desired speed is set and the vehicle will keep running at that speed without depressing the accelerator pedal.

▼ **To decrease the speed (by the "RES/SET" switch)**

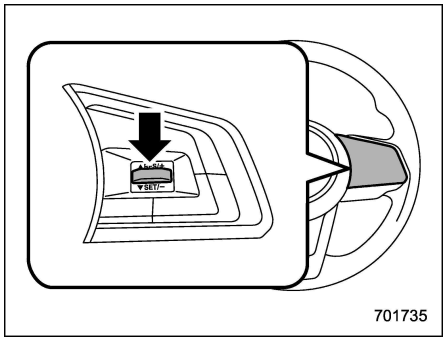

Press the "RES/SET" switch to the "SET" side and hold it until the vehicle reaches the desired speed. Then, release the switch. The vehicle speed at that moment will be memorized and treated as the new set speed.

When setting the displayed unit as "MPH":

The set speed can be decreased 1 mph (1.6 km/h) each time by pressing the "RES/SET" switch to the "SET" side.

When setting the displayed unit as "km/h":

The set speed can be decreased 1 km/h each time by pressing the "RES/SET" switch to the "SET" side.

▼ **To decrease the speed (by brake pedal)**

1. Depress the brake pedal to release cruise control temporarily.

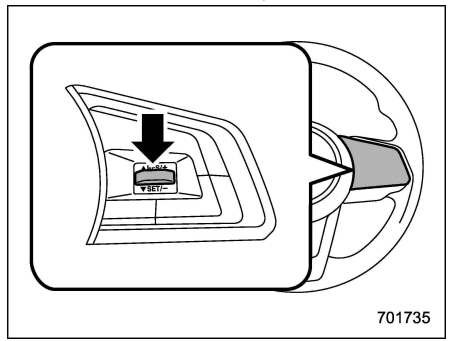

2. When the speed decreases to the desired speed, press the "RES/SET" switch to the "SET" side once. Now the desired speed is set and the vehicle will keep running at that speed without depressing the accelerator pedal.

■ Cruise control indicator

Refer to “Cruise control indicator” ☞3-30.

■ Cruise control set indicator

Refer to “Cruise control set indicator” ☞3-31.

BSD/RCTA (if equipped)

The BSD/RCTA consists of rear radar with Blind Spot Detection and Rear Cross Traffic Alert.

These functions of BSD/RCTA are the systems that detect objects and vehicles to the rear and draw attention to the driver when changing a lane or when driving in reverse.

⚠ WARNING

The driver is responsible for driving safely. Always be sure to check the surroundings with your eyes when changing lanes or reversing the vehicle.

The system is designed to assist the driver in changing lanes or reversing safely by monitoring the rear and side areas of the vehicle. However, you cannot rely on this system alone in assuring the safety during a lane change or reversing. Overconfidence in this system could result in an accident and lead to serious injury or death. Since the system operation has various limitations, the flashing or illumination of the BSD/RCTA approach indicator light may be delayed or it may not operate at all even when a vehicle is present in a neighboring lane or approaching from either side.

The driver is responsible for paying attention to the rear and side areas of the vehicle.

■ System features

BSD/RCTA consists of the following functions.

- To detect a vehicle in a blind spot on an adjacent lane or a vehicle approaching at high speed while driving the vehicle (Blind Spot Detection)
- To detect a vehicle approaching from the right or left while reversing the vehicle (Rear Cross Traffic Alert)

The system uses radar sensors for the following features.

NOTE

The BSD/RCTA radar sensor has been certified by the radio wave related laws of the U.S. and Canada. When driving in other countries, certification of the country where the vehicle is driven must be obtained. For certification in the U.S. and Canada, refer to “Certification for the BSD/RCTA” ☞7-56.

– CONTINUED –

▼ Blind Spot Detection (BSD)

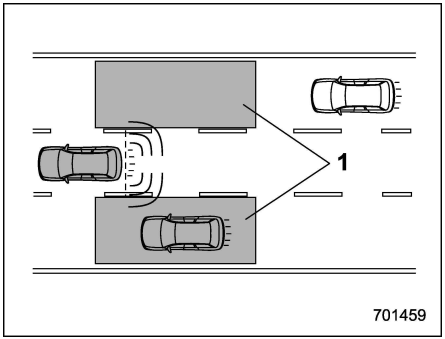

1) Operating range

The system notifies the driver of the presence of vehicles in its blind spot.

- If the system detects a vehicle in its blind spot, it warns the driver by illuminating the BSD/RCTA approach indicator light (s) on the outside mirror(s).
- If the driver operates the turn signal lever in the direction where the BSD/RCTA approach indicator light is illuminating, the system warns the driver of dangers by flashing the BSD/RCTA approach indicator light.

▽ Lane Change Assist (LCA)

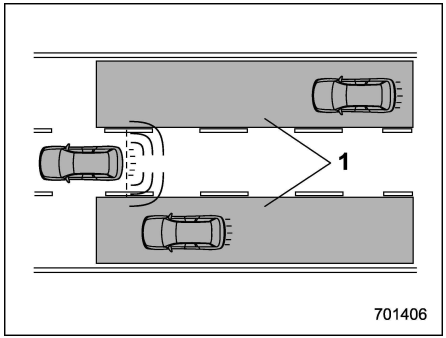

1) Operating range

The system notifies the driver of vehicles approaching at a high speed in the neighboring lanes.

- If the system detects a vehicle approaching at a high speed in the neighboring lanes, it warns the driver of dangers by illuminating the BSD/RCTA approach indicator light(s) on the outside mirror(s).
- If the driver operates the turn signal lever in the direction where the BSD/RCTA approach indicator light is illuminating, the system warns the driver of dangers by flashing the BSD/RCTA approach indicator light.

▼ Rear Cross Traffic Alert (RCTA)

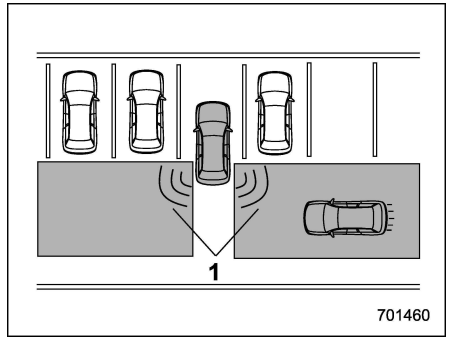

1) Operating range

The system notifies the driver of another vehicle approaching from either side when driving in reverse. This feature helps the driver check the rear and side areas of the vehicle when moving backward.

If the system detects a vehicle approaching from either side while moving backward, it warns the driver of dangers in the following way.

- The BSD/RCTA approach indicator light(s) on the outside mirror(s) flashes.
- A warning buzzer sounds.
- An icon appears on the rear view camera screen (if equipped)

▽ **Limitations of the detectability of RCTA**

Since the detectability of RCTA is limited, the RCTA may not operate properly in angled parking.

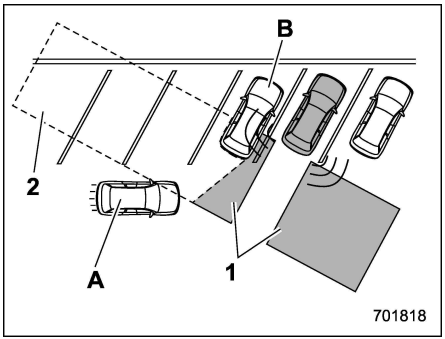

Example 1
1) The detection range of the radar sensors
2) Area out of detection range of the radar sensors
A) Vehicle that may not be detected
B) Parked vehicle

⚠ WARNING

An approaching vehicle (A) may not be detected because the detection range is limited by the parked vehicle (B). Always be sure to check the surroundings with your eyes when reversing the vehicle.

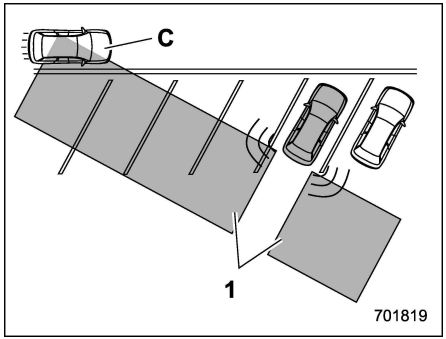

Example 2
1) The detection range of the radar sensors
C) Vehicle that may be detected

NOTE

The system may detect that a vehicle (C) is passing in front of your vehicle. Always be sure to check the surroundings with your eyes when reversing the vehicle.

■ System operation

▼ Operating conditions

The BSD/RCTA will operate when all of the following conditions are met.

- The ignition switch is in the “ON” position.
- The BSD/RCTA warning indicator and BSD/RCTA OFF indicator are turned off.
- The vehicle is driven at speeds above 7 mph (12 km/h) (except when reversing).
- The select lever is in the “R” position (RCTA only).

The BSD/RCTA will not operate in the following situations.

- The BSD/RCTA OFF indicator appears.
- The vehicle speed is below 6 mph (10 km/h) even when the BSD/RCTA OFF indicator does not appear (except when reversing).

NOTE

- **In the following cases, the BSD/RCTA will stop operating and the BSD/RCTA warning indicator will appear.**
  - **When a malfunction occurs in the system, including the BSD/RCTA approach indicator light**
- **If the BSD/RCTA warning indicator appears, exercise proper caution. For details, refer to “BSD/RCTA warning**

– CONTINUED –

indicator” ☞7-54.

- In the following cases, the BSD/RCTA will temporarily stop operating (or may stop operating) and the BSD/RCTA warning indicator will appear.
  - When the radar sensor becomes significantly misaligned (If the orientation of the radar sensor is shifted for any reason, readjustment is required. Have the sensor adjusted at a SUBARU dealer.)
  - When a large amount of snow or ice sticks to the rear bumper surface around the radar sensors
  - When the vehicle is driven on a snow-covered road or in an environment in which there are no objects around (such as in a desert) for a prolonged period of time
  - When the temperature around the radar sensors increases excessively due to long driving on uphill grades in the summer, etc.
  - When the temperature around the radar sensors becomes extremely low
  - When the vehicle battery voltage lowers
  - When the vehicle voltage exceeds the battery voltage rating

The BSD/RCTA will resume operation once these conditions are corrected, and the BSD/RCTA warning indicator will disappear. However, if the BSD/RCTA warning indicator appears for a prolonged period of time, have the system inspected at a SUBARU dealer as soon as possible.

- The detectability of the radar sensors is restricted. The BSD/RCTA detection may be impaired and the system may not operate properly under the following conditions.
  - When the rear bumper around the radar sensors is distorted
  - When ice, snow or mud adheres to the rear bumper surface around the radar sensors
  - When stickers, etc. are affixed on the areas of the radar sensors on the rear bumper
  - During adverse weather conditions such as rain, snow or fog
  - When driving on wet roads such as snow-covered roads and through puddles
- The radar sensors may not detect or may have difficulty detecting the following vehicles and objects.
  - Small motorcycles, bicycles, pedestrians, stationary objects on the road or road side, etc.
  - Vehicles with body shapes that the radar may not reflect (vehicles with lower body height such as a trailer with no cargo and sports cars)
  - Vehicles that are not approaching your vehicle even though they are in the detection area (either on a neighboring lane to the rear or beside your vehicle when reversing) (The system determines the presence of approaching vehicles based on data detected by the radar sensors.)
  - Vehicles traveling at significantly different speeds
  - Vehicles driving in parallel at almost the same speed as your vehicle for a prolonged time
  - Oncoming vehicles
  - Vehicles in a lane beyond the neighboring lane
  - Vehicles travelling at a significantly lower speed that you are trying to overtake
- On a road with extremely narrow lanes, the system may detect vehicles driving in a lane next to the neighboring lane.
- When the 8-inch audio/navigation system is performing a software update, the RCTA warning icons may not be displayed on the audio/navigation

screen until the update is complete.

■ BSD/RCTA approach indicator light/warning buzzer

While the BSD/RCTA is active, the following item(s) will operate to alert the driver:

- The BSD/RCTA approach indicator light (when there are vehicles in the neighboring lanes).
- The BSD/RCTA approach indicator light and warning buzzer (when a vehicle is approaching from the left or right side while your vehicle is reversing)

▼ BSD/RCTA approach indicator light

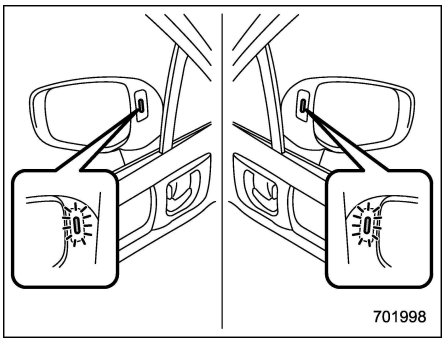

BSD/RCTA approach indicator light

It is mounted on each side of the outside mirrors.

The indicator light will illuminate when a vehicle approaching from behind is detected.

The indicator light will flash to warn the driver of dangers under the following conditions.

- While the indicator light is illuminating, if the turn signal lever is operated toward the side in which this light turned on
- When reversing the vehicle while the system detects a vehicle approaching from either side

▽ BSD/RCTA approach indicator light dimming function

When the headlights are turned on, the brightness of the BSD/RCTA approach indicator light will be reduced.

NOTE

- **You may have difficulty seeing the BSD/RCTA approach indicator light under the following conditions.**
  - **When sunlight shines directly on it**
  - **When the headlight beams from a vehicle traveling behind shines directly on it**
- **While the illumination brightness control dial is in the fully upward position, even if the headlights are turned on, the brightness of the BSD/RCTA approach indicator light will not be reduced. For details about the illumination brightness control dial, refer to "Illumination brightness control" ☞3-56.**

▼ BSD/RCTA approach warning buzzer (only when reversing)

A warning buzzer sounds along with flashing of the BSD/RCTA approach indicator light to warn the driver of dangers.

The setting of the warning buzzer volume can be changed by operating the multi information display of the combination meter. For details, refer to "BSD/RCTA" ☞3-43.

▼ Safety tips regarding the BSD/RCTA approach indicator light/warning buzzer

- In the following cases, operation of the BSD/RCTA approach indicator light and the warning buzzer may be delayed or the system may fail to issue these warnings.
  - When a vehicle moves to the neighboring lane from a lane next to the neighboring lane
  - When driving on a steep incline or on repeated sharp uphill and downhill grades
  - When going beyond a pass
  - When both your vehicle and a

– CONTINUED –

vehicle driving on a neighboring lane are driving on the far side of each lane.
– When several narrowly-spaced vehicles are approaching in a row
– In low radius bends (tight bends or when making turns at an intersection)
– When there is a difference in height between your lane and the neighboring lane
– Immediately after the BSD/RCTA is activated by pressing the BSD/RCTA OFF switch
– Immediately after the select lever is shifted to the “R” position
– When extremely heavy cargo is loaded in the trunk or cargo area

● During reversing, operation of the BSD/RCTA approach indicator light and the warning buzzer may be delayed or the system may fail to issue these warnings under the following conditions.
– When backing out of an angled parking space
– When a large-sized vehicle is parked next to your vehicle (That vehicle prevents the propagation of radar waves.)
– When reversing on sloped roads
– When reversing at a high speed

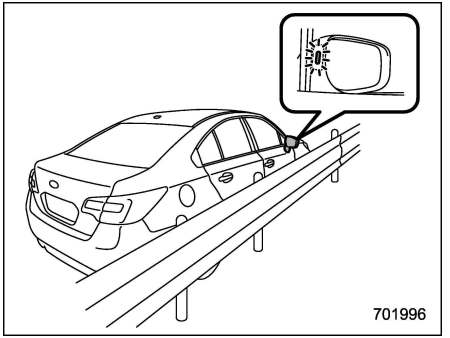

● The BSD/RCTA approach indicator light may illuminate when driving close to solid objects on the road or road side (such as guardrails, tunnels and sidewalls).

● When turning at an intersection in urban areas, or a multilane intersection, the BSD/RCTA approach indicator light may flash.

● If a building or a wall exists in the reversing direction, the BSD/RCTA approach indicator light may flash and the warning buzzer may sound.

● In the following cases, the system may detect a vehicle driving two lanes away from your vehicle.
– When your vehicle drives on the near side of its lane from the corresponding vehicle
– When the vehicle driving two lanes away drives on the near side of its lane from your vehicle

■ BSD/RCTA warning indicator

▼ System temporary stop indicator

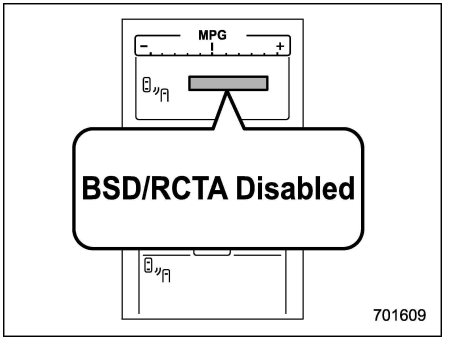

System temporary stop indicator

This indicator appears when the system is used at extremely high or low temperatures or when abnormal voltage exists. Once these conditions are corrected, the system will recover from the temporary stop condition and the indicator will disappear.

If the indicator remains displayed for a prolonged time, have the system inspected at a SUBARU dealer.

▼ System temporary stop indicator due to reduced radar sensitivity

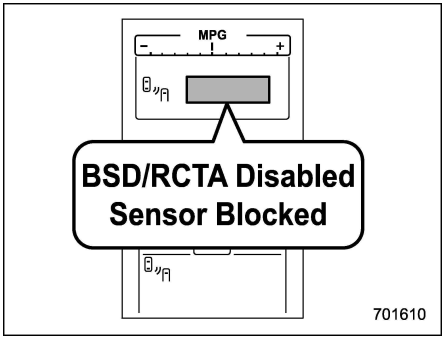

System temporary stop indicator due to reduced radar sensitivity

This indicator appears when the detectability of the radar sensors is reduced. Once the condition is corrected, the system will recover from the temporary stop condition and the indicator will disappear.

If the indicator remains displayed for a prolonged time, have the system inspected at a SUBARU dealer.

▼ System malfunction indicator

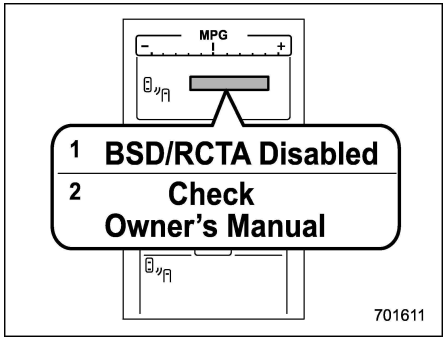

System malfunction indicator
1) At first, this message will appear
2) Then this message will appear

This indicator appears when a malfunction occurs in the system. Contact a SUBARU dealer and have the system inspected.

■ BSD/RCTA OFF switch

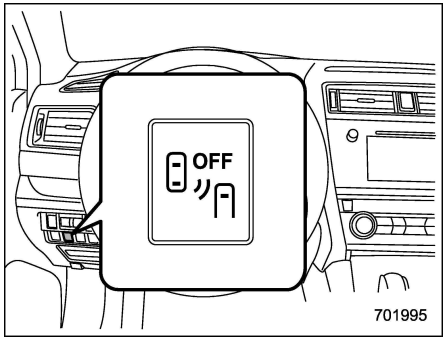

BSD/RCTA OFF switch

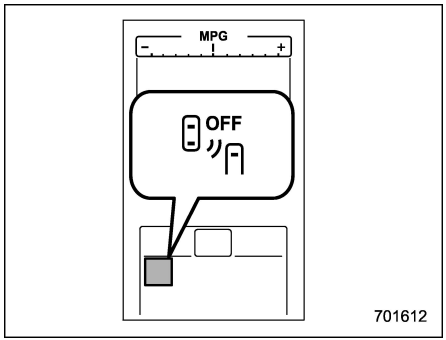

BSD/RCTA OFF indicator

If the BSD/RCTA OFF switch is pressed, the BSD/RCTA OFF indicator appears on the multi information display of the combi-

– CONTINUED –

nation meter, and the BSD/RCTA is deactivated.

Press the switch again to activate the BSD/RCTA. The BSD/RCTA OFF indicator disappears.

NOTE

- **In the following cases, press the BSD/RCTA OFF switch to deactivate the system. The system may not operate properly due to blocked radar waves.**
  - **– When towing a trailer (Outback)**
  - **– When a bicycle carrier or other item is fitted to the rear of the vehicle**
  - **– When using a chassis dynamometer or free roller device, etc.**
  - **– When running the engine and making the wheels rotate while lifting up the vehicle**
- **If the ignition switch is turned to the "LOCK"/"OFF" position, the last known status of the system is maintained. For example, if the ignition switch is turned to the "LOCK"/"OFF" position with the BSD/RCTA deactivated, the BSD/RCTA remains deactivated the next time the ignition switch is turned to the "ON" position.**

■ Certification for the BSD/RCTA

- **U.S.-spec. models**

FCC ID: OAYSRR3A

⚠ CAUTION

FCC WARNING

Changes or modifications not expressly approved by the party responsible for compliance could void the user's authority to operate the equipment.

This device complies with part 15 of the FCC Rules. Operation is subject to the following two conditions: (1) This device may not cause harmful interference, and (2) this device must accept any interference received, including interference that may cause undesired operation.

- **Canada-spec. models**

NOTE

This device complies with Industry Canada's licence-exempt RSSs. Operation is subject to the following two conditions: (1) This device may not cause interference; and (2) This device must accept any interference, including interference that may cause undesired operation of the device.

REMARQUE

Le présent appareil est conforme aux CNR d'Industrie Canada applicables aux appareils radio exempts de licence. L'exploitation est autorisée aux deux conditions suivantes: (1) l'appareil ne doit pas produire de brouillage; (2) l'utilisateur de l'appareil doit accepter tout brouillage radioélectrique subi, même si le brouillage est susceptible d'en compromettre le fonctionnement.

203226

■ Handling of radar sensors

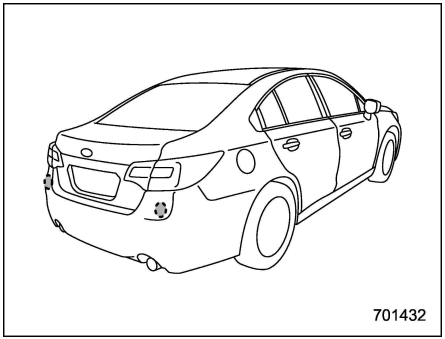

Radar sensors (Legacy)

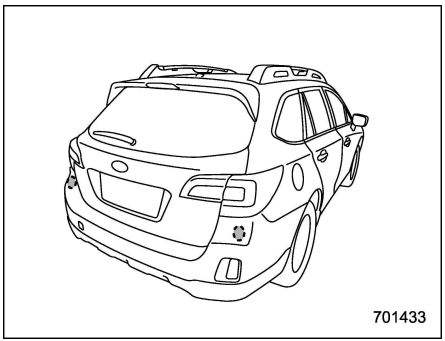

Radar sensors (Outback)

The radar sensors, one on each side of the vehicle, are mounted inside the rear bumper.

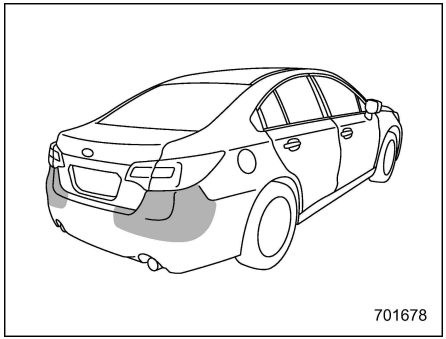

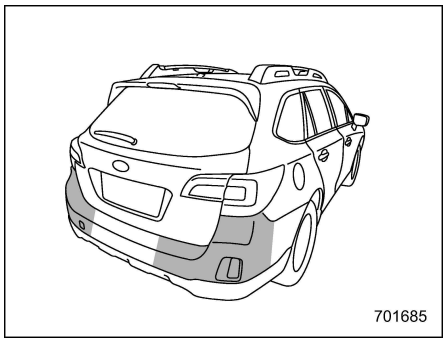

⚠ CAUTION

To ensure correct operation of the BSD/RCTA, observe the following precautions.

- **Always keep the bumper surface near the radar sensors clean.**
- **Do not affix any stickers or other items on the bumper surface near the radar sensors. For details, consult your SUBARU dealer.**
- **Do not modify the bumper near the radar sensors.**
- **Do not paint the bumper near the radar sensors.**
- **Do not expose the bumper near the radar sensors to strong impacts. If a sensor becomes misaligned, a system malfunction may occur, including the inability to detect vehicles entering the detection areas. If any strong shock is applied to the bumper, be sure to contact your SUBARU dealer for inspection.**
- **Do not disassemble the radar sensors.**

– CONTINUED –

NOTE

If the radar sensors require repair or replacement, or the bumper area around the radar sensors requires repair, paintwork or replacement, contact your SUBARU dealer for assistance.

Reverse Automatic Braking System (if equipped)

Reverse Automatic Braking is a system designed to help avoid collisions or reduce collision damage when reversing the vehicle. If a wall or an obstacle is detected in the reversing direction, the system will notify the driver with a warning sound and may activate the vehicle's brakes automatically.

WARNING

- **Reverse Automatic Braking is not a system intended to replace the driver's responsibility to check their surroundings for vehicles or obstacles to avoid a collision.**
- **The driver is responsible for driving safely. Always be sure to check the surroundings visually when reversing the vehicle.**
- **Since the system operation has various limitations, the warning sound or automatic braking may be delayed or may not operate at all even when an obstacle is present in the reversing direction.**
- **The system is not designed to detect people (including children), animals or other moving objects.**
- **Depending on the vehicle condition or the surrounding environment, the sonar sensor's ability to detect objects may become unstable.**

NOTE

The Reverse Automatic Braking System records and stores the following data when automatic braking operates. It does not record conversations, personal information or other audio data.

- **Distance from the object**
- **Vehicle speed**
- **Accelerator pedal operation status**
- **Brake pedal operation status**
- **Select lever position**
- **Outside temperature**
- **The sensitivity setting of the sonar sensors**

SUBARU and third parties contracted by SUBARU may acquire and use the recorded data for the purpose of vehicle research and development. SUBARU and third parties contracted by SUBARU will not disclose or provide the acquired data to any other third

party except under the following conditions.

- **The vehicle owner has given his/her consent.**
- **The disclosure/provision is based on a court order or other legally enforceable request.**
- **Data that has been modified so that the user and vehicle cannot be identified is provided to a research institution for statistical processing or similar purposes.**

■ Reverse Automatic Braking System overview

The system detects objects using sonar sensors installed in the rear bumper.

- If the system determines a possible collision with an object in the reversing direction, automatic deceleration will be activated. Also, beeping sounds will activate.
- If the vehicle is further reversed, automatic hard braking will be applied and a continuous beeping sound will activate.

▼ **Detecting range**

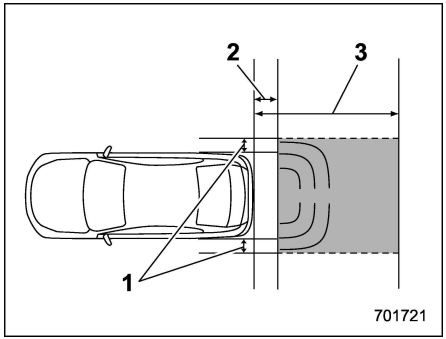

1) Detecting range (width): Approximately 6 in (15 cm) outside of the vehicle width
2) Range that the system cannot detect: Approximately 20 in (50 cm) behind the rear of the vehicle
3) Detecting range (length): Approximately 5 ft (1.5 m) from the rear of the vehicle

⚠ WARNING

If your vehicle is trapped on a railroad crossing and you are trying to escape by reversing through the crossing gate, the system may recognize the crossing gate as an obstacle and brake may activate. In this case, remain calm and either continue to depress the accelerator pedal or cancel the system. To cancel the system, refer to "Canceling the Reverse Automatic Braking system operation" ☞7-66.

■ Operating conditions

The Reverse Automatic Braking system will operate when all of the following conditions are met.

- The ignition switch is in the "ON" position
- The EyeSight warning indicator is off
- The RAB warning indicator is off
- HALT (Reverse Automatic Braking system OFF) indicator is off
- The Reverse Automatic Braking system is set to on
- The select lever is in the "R" position
- The vehicle speed is between 1 to 9 mph (1.5 to 15 km/h)

⚠ CAUTION

- **In the following cases, the Reverse Automatic braking system will not operate. Promptly contact a SUBARU dealer to have the system inspected.**
  - **The EyeSight warning indicator is illuminated**
  - **The RAB warning indicator is**

– CONTINUED –

illuminated

- In the following cases, the Reverse Automatic braking system cannot be operated.
  - The (EyeSight Temporary Stop indicator: White) is illuminated, and the messages corresponding to the EyeSight temporary stop are displayed on the multi information display. For details, refer to the Owner's Manual supplement for the EyeSight system.
  - The Reverse Automatic Braking system OFF indicator is illuminated
- In the following cases, the system may not be able to properly detect an obstacle. Promptly contact a SUBARU dealer to have the system inspected.
  - A sticker, paint, or a chemical is applied to the rear bumper near the sonar sensor
  - The rear bumper is modified
  - The rear bumper has been removed and attached
  - The ground clearance is changed due to the vehicle's loading condition or modification
  - Ice, snow or mud is adhered to the rear bumper near the sonar sensor
  - The rear bumper is exposed to strong impact, or the rear bumper is deformed
- On a steep hill, the system's automatic braking ability will be reduced.
- The system is designed to avoid collisions by automatic hard braking when the vehicle's reversing speed is less than approximately 3 mph (5 km/h). However, the system does not guarantee that the vehicle will be able to avoid collisions in any situation.
- If the vehicle is reversed at an extremely slow speed, the driver's operation may be prioritized. In this case, automatic braking will not operate.
- The system may not be able to detect the following objects
  - Sharp or thin objects such as poles, fences and ropes which may not reflect the sound wave emitted from the sonar sensor
  - Objects that are too close to the rear bumper when the select lever is set to the "R" position
  - Objects with a surface which may not reflect the sound wave emitted from the sonar sensor such as a chain link fence
- Objects the system is not designed to detect
  - Pedestrians
  - Moving objects including moving vehicles
  - Objects which absorbs sound waves such as cloth or snow
  - Objects whose surface has a diagonal angle
  - Objects that are low to the ground such as parking blocks
  - Objects that are high above the ground such as objects hanging from above
- When reversing the vehicle, the system may not be able to properly detect objects or may cause a system malfunction if the following conditions exist

  High frequency sound from other

sources are nearby

- **Horn sound from another vehicle**
- **Engine sound from other vehicles**
- **Sound of an air brake**
- **Vehicle detection equipment or a sonar from another vehicle**
- **A sound wave with a frequency similar to the vehicle's system is transmitted near by**
- **A vehicle equipped with the same system is reversing toward your reversing direction**

Weather conditions

- **Extremely high or extremely low temperatures in which the area near the sonar sensor becomes too hot or too cold to operate**
- **The rear bumper near the sonar sensors are exposed to heavy rain or a significant amount of water**
- **Fog, snow or sandstorm, etc.**
- **Air is moving rapidly such as when a strong wind is blowing**

Parts attached to the rear bumper near the sonar sensor

- **Commercial electronic parts (fog light, fender pole, radio antenna) or commercial attachment parts (trailer hitch, bicycle carrier, bumper guard) are attached**
- **Parts that emit high frequency sound, such as a horn or speaker, are attached**

Vehicle conditions

- **The vehicle is significantly inclined**
- **The ground clearance is significantly reduced due to the vehicle's loading condition, etc.**
- **When the sonar sensor is misaligned due to a collision or an accident**

Surrounding environment

- **A cloth banner, flag, hanging branch or railroad crossing bars are present in the reversing direction**
- **When reversing on a gravel or grassy area**
- **When reversing in an area where objects or walls are adjacent to the vehicle such as narrow tunnels, narrow bridges, narrow roads or narrow garages**
- **Wheel track or hole is present in the ground of the reversing direction**
- **When reversing over a drainage cover (grating cover)**
- **The path of the reversing direction is inclined such as on a steep uphill**
- **A curb is present in the reversing direction**
- **When reversing downhill**

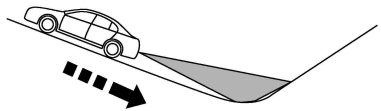

Example: The path of the reversing direction is inclined such as on a steep uphill.

– CONTINUED –

NOTE

- **When the 8-inch audio/navigation system is performing a software update, the Reverse Automatic Braking System may not display the following items on the audio/navigation screen until the update is complete.**
  - **Display Icon on/off Function**
  - **Distance Indicator Image**
  - **Warning Message**
- **The Reverse Automatic Braking system will operate at vehicle speed between 1 to 9 mph (1.5 to 15 km/h). However, stopping the vehicle by automatic hard braking is designed to operate when the vehicle speed is less than 3 mph (5 km/h).**

■ Reverse Automatic Braking System operation

When Reverse Automatic Braking System is in operation, an audible warning beeps will sound in 3 levels to warn the driver of a potential collision.

While the RAB is operating, a warning message is displayed on the audio/navigation monitor and the combination meter display.

Guideline of detecting range

Alert level	Range of detected object*	Distance indicator	Alarm pattern
Long proximity (object detected)	35 inches (90 cm) or more	Green	No warning sound
Medium proximity alert (approaching the object)	28 to 35 inches (70 to 90 cm)	Yellow	Short beeps
Short proximity alert (approaching closer to the object)	20 to 28 inches (50 to 70 cm)	Orange	Rapid short beeps
Closest proximity alert (too close to the object)	20 inches (50 cm) or less	Red	Continuous beep

*: Range of detection may vary depending on the environmental condition.

– CONTINUED –

▼ Obstacle detected and alert level

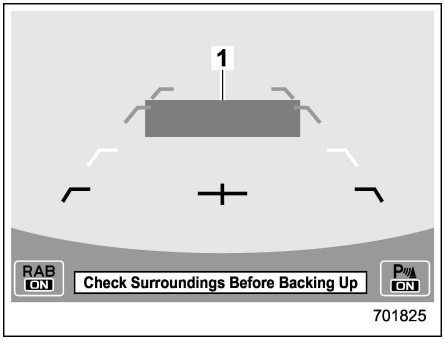

Long proximity alert (object detected)
1) Green: 35 inches (90 cm) or more

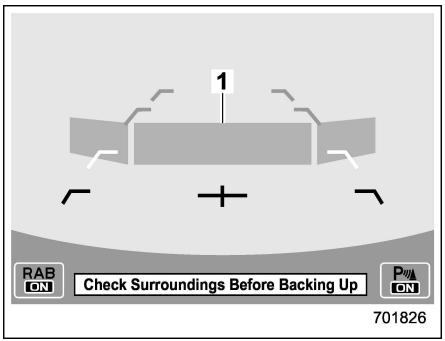

Medium proximity alert (approaching the object)
1) Yellow: 28 to 35 inches (70 to 90 cm)

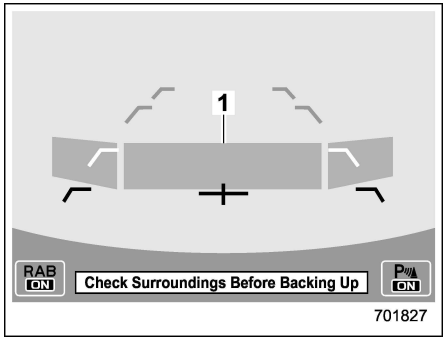

Short proximity alert (approaching the object closer)
1) Orange: 20 to 28 inches (50 to 70 cm)

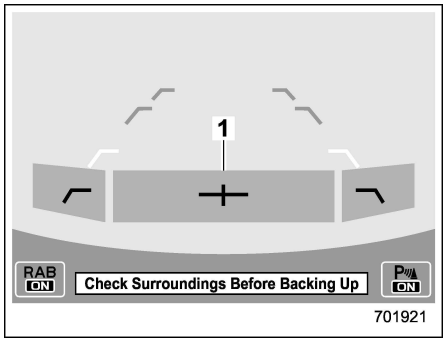

Closest proximity alert (too close to the object)
1) Red: 20 inches (50 cm) or less

When an object is detected in the reversing direction, the range of detected object will be shown on the audio/navigation monitor.

A warning alarm will sound and, depending on the speed, either torque control to generate engine braking or automatic braking will be applied.

▼ Object close behind warning

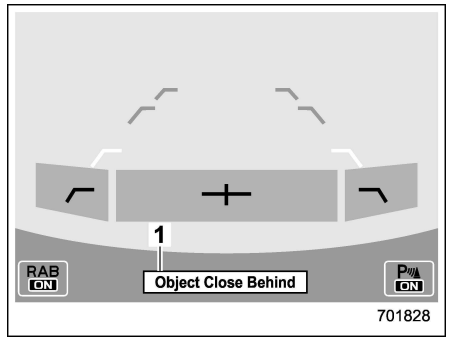

Automatic braking warning
1) Warning message

If the vehicle continues to go in reverse, the system may determine the risk of collision with the object. In this case, short warning beeps or continuous warning beeps will sound and either strong automatic braking or torque control will be applied to prevent collision.

At this time, a warning message is also displayed on the combination meter display.

▼ **When the vehicle is being stopped by the system**

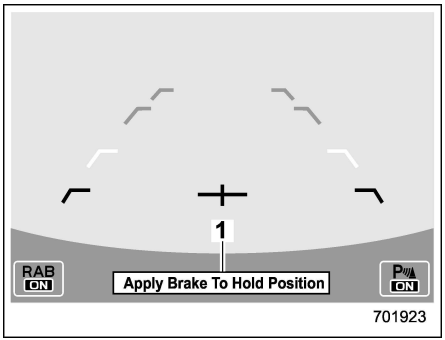

Depress brake pedal warning
1) Warning message

Make sure to depress the brake pedal once the vehicle has been stopped by automatic braking. Until the brake pedal is depressed, a message will be displayed on the audio/navigation monitor and the continuous beep will remain sounding.

At this time, a warning message is also displayed on the combination meter display.

▼ **After the vehicle is stopped by the system**

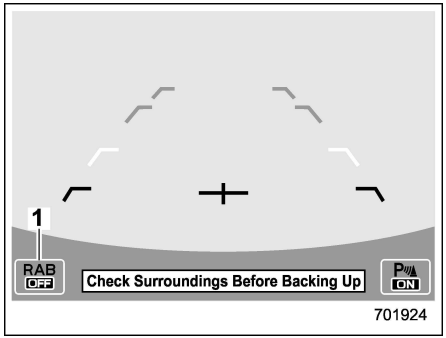

1) Reverse Automatic Braking system OFF indicator

After the brake pedal is depressed, the Reverse Automatic Braking system OFF indicator will illuminate and the system will temporarily stop operating. The Reverse Automatic Braking system OFF indicator will turn off when the select lever is shifted to a position other than the “R” position.

The system will operate again the next time the select lever is shifted to “R” position.

NOTE

- **In the following cases, after the vehicle has been stopped by the Reverse Automatic Braking system, brake control is released and the electronic parking brake operates. For details about releasing the parking brake, refer to “Electronic parking brake” ☞7-40.**
  - **When 2 minutes pass after the vehicle is stopped**
  - **When any door is opened**
  - **When the EyeSight system malfunctions**
  - **When the EyeSight system stops temporarily**
  - **When the Reverse Automatic Braking system stops temporarily**
- **The message/warning message will not display for approximately 8 seconds after turning the ignition switch to the “ON” position.**

– CONTINUED –

■ Canceling the Reverse Automatic Braking system operation

The Reverse Automatic Braking system can be temporarily canceled by any of the following operation.

- While the vehicle is stopped by the operation of automatic braking, the brake pedal is depressed.
- While the vehicle is stopped by the operation of automatic braking, the accelerator pedal is depressed.
- The accelerator pedal is depressed continuously (In this case, limited acceleration will be canceled and the vehicle will continue reversing.)
- The select lever is shifted to a position other than the “R” position.

NOTE

The system will be canceled if the object is no longer detected.

■ RAB warning indicator

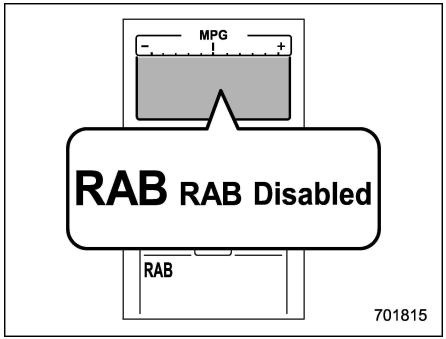

If the Reverse Automatic Braking System malfunctions, the above indicator illuminates on the combination meter. Contact the nearest SUBARU dealer for details.

■ Reverse Automatic Braking system ON/OFF setting

While the select lever is shifted to the “R” position, the below functions of the Reverse Automatic Braking system can be set by operating the audio/navigation monitor.

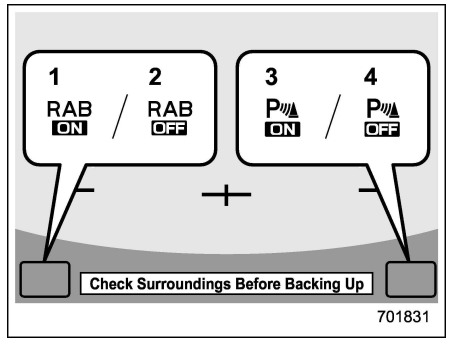

1) ON setting key of Reverse Automatic Braking
2) OFF setting key of Reverse Automatic Braking
3) ON setting key of the object detection warning beeping sound
4) OFF setting key of the object detection warning beeping sound

When the ON setting key is shown, the corresponding setting is ON.

Touch and hold the ON setting key to turn the setting OFF.

When the OFF setting is shown, the corresponding setting is OFF.

Touch and hold the OFF setting key to turn the setting ON.

When the Reverse Automatic Braking system and/or the object detection warning beeping sounds are turned OFF, the following indicator(s) will illuminate.

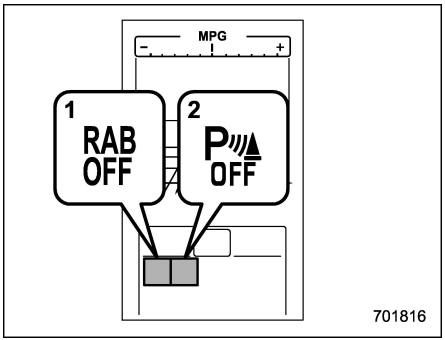

1) RAB OFF indicator: illuminates when the Reverse Automatic Braking system is turned OFF.
2) Sonar audible alarm OFF indicator: illuminates when the object detection warning beeping sound is turned OFF.

Each indicator will turn off when the corresponding function is turned ON.

NOTE

- **When the settings cannot be changed, the ON/OFF setting key will be grayed out.**
- **The settings cannot be changed for approximately 14 seconds after turning the ignition switch to the "ON" position.**
- **The ON/OFF setting key may be greyed out if the Reverse Automatic Braking system malfunctions, etc. In this case, turn the ignition switch to the "LOCK"/"OFF" position and then turn it to the "ON" position again. If the setting cannot be changed even after turning the ignition switch to the "ON" position again, consult your SUBARU dealer.**
- **The settings will be restored as follows when the select lever is shifted to the "R" position next time.**
  - **Reverse Automatic Braking system settings: default (ON setting)**
  - **Object detection warning beeping sound: the setting selected by operating the audio/navigation monitor**

Also, the following settings can be changed by operating the multi information display.

- Warning volume
- Sonar audible alarm

For details, refer to "RAB" ☞3-43.

■ Handling of the sonar sensors

The 4 sonar sensors are located in the rear bumper. To ensure the proper operation of the Reverse Automatic Braking system, observe the following precautions.

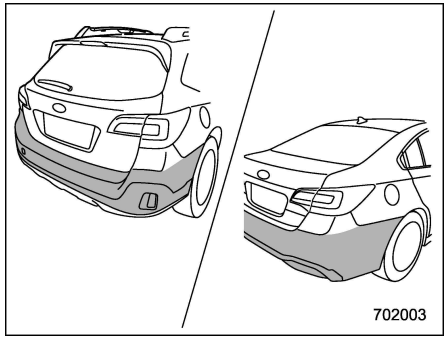

- Do not affix any stickers or other items on the bumper surface near the sonar sensors.
- Always keep the rear bumper surface near the sonar sensors clean.
- Do not modify the rear bumper.
- Do not paint the bumper near the sonar sensors.
- Do not apply strong impacts to the rear bumper near the sonar sensors. If a sensor becomes misaligned, a system malfunction may occur, including inability to detect

– CONTINUED –

objects in the reversing direction. If any strong impact is applied to the rear bumper, contact a SUBARU dealer to have the system inspected.

- Do not disassemble the sonar sensors.

NOTE

If the sonar sensors require repair or replacement, or if the area of the rear bumper near the sonar sensors requires repair, paintwork or replacement, contact your SUBARU dealer for assistance.

New vehicle break-in driving – the first 1,000 miles (1,600 km) 8-2
Fuel economy hints 8-2
Engine exhaust gas (carbon monoxide) 8-2
Catalytic converter 8-3
Periodic inspections 8-4
Driving in foreign countries 8-4
Driving tips for AWD vehicles 8-5
Off road driving 8-6
Legacy 8-6
Outback 8-6
Winter driving 8-8
Operation during cold weather 8-8
Driving on snowy and icy roads 8-10
Corrosion protection 8-11
Snow tires 8-11
Tire chains 8-12
Rocking the vehicle 8-12
Loading your vehicle 8-12
Vehicle capacity weight 8-13
GVWR and GAWR (Gross Vehicle Weight Rating and Gross Axle Weight Rating) 8-14
Roof rack (Outback – if equipped) 8-14
Roof rails with integrated crossbars (Outback – if equipped) 8-15
Trailer hitch (Outback – if equipped) 8-19
Connecting a trailer 8-20
If not towing a trailer 8-21
Trailer towing (Legacy) 8-21
Trailer towing (Outback) 8-22
Warranties and maintenance 8-22
Maximum load limits 8-22
Trailer Hitches 8-26
Connecting a trailer 8-26
Trailer towing tips 8-27

New vehicle break-in driving – the first 1,000 miles (1,600 km)

The performance and long life of your vehicle are dependent on how you handle and care for your vehicle while it is new. Follow these instructions during the first 1,000 miles (1,600 km):

- Do not race the engine. And do not allow engine speed to exceed 4,000 rpm except in an emergency.
- Do not drive at one constant engine or vehicle speed for a long time, either fast or slow.
- Avoid starting suddenly and rapid acceleration, except in an emergency.
- Avoid hard braking, except in an emergency.

The same break-in procedures should be applied to a newly installed or overhauled engine or when brake pads or brake linings are replaced with new ones.

Fuel economy hints

The following suggestions will help to save your fuel.

- Select the proper gear position for the speed and road conditions.
- Avoid sudden acceleration or deceleration. Always accelerate gently until you reach the desired speed. Then try to maintain that speed for as long as possible.
- Do not pump the accelerator and avoid racing the engine.
- Avoid unnecessary engine idling.
- Keep the engine properly tuned.
- Keep the tires inflated to the correct pressure shown on the tire placard, which is located under the door latch on the driver's side. Low pressure will increase tire wear and fuel consumption.
- Use the air conditioner only when necessary.
- Keep the front and rear wheels in proper alignment.
- Avoid carrying unnecessary luggage or cargo.
- The indication of the ECO gauge shows a reference for saving fuel. For details, refer to "ECO gauge" ☞3-11.

Engine exhaust gas (carbon monoxide)

⚠ WARNING

- **Never inhale engine exhaust gas. Engine exhaust gas contains carbon monoxide, a colorless and odorless gas which is dangerous, or even lethal, if inhaled.**
- **Always properly maintain the engine exhaust system to prevent engine exhaust gas from entering the vehicle.**
- **Never run the engine in a closed space, such as a garage, except for the brief time needed to drive the vehicle in or out of it.**
- **Avoid remaining in a parked vehicle for a long time while the engine is running. If that is unavoidable, then use the ventilation fan to force fresh air into the vehicle.**
- **Always keep the front ventilator inlet grille free from snow, leaves or other obstructions to ensure that the ventilation system always works properly.**
- **If at any time you suspect that**

exhaust fumes are entering the vehicle, have the problem checked and corrected as soon as possible. If you must drive under these conditions, drive only with all windows fully open.

- Keep the trunk lid (Legacy) or rear gate (Outback) closed while driving to prevent exhaust gas from entering the vehicle.

NOTE

Due to the expansion and contraction of the metals used in the manufacture of the exhaust system, you may hear a crackling sound coming from the exhaust system for a short time after the engine has been shut off. This sound is normal.

Catalytic converter

WARNING

- **Avoid fire hazards. Do not drive or park the vehicle anywhere near flammable materials (e.g. grass, paper, rags or leaves), because the catalytic converter operates at very high temperatures.**
- **Keep everyone and flammable materials away from the exhaust pipe while the engine is running. The exhaust gas is very hot.**

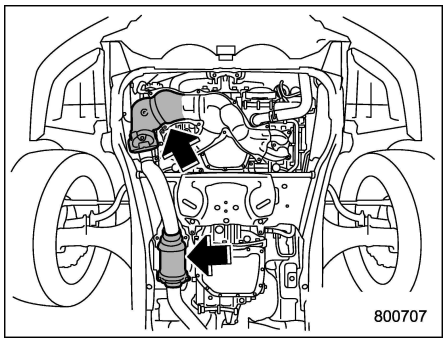

2.5 L models

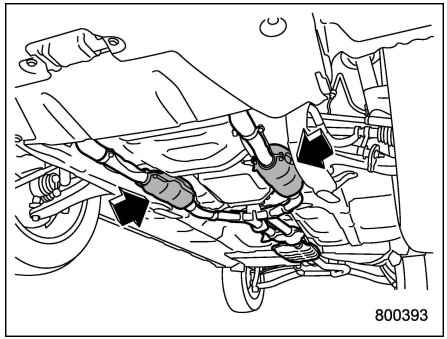

3.6 L models

The catalytic converter is installed in the exhaust system. It serves as catalyst to reduce HC, CO and NOx in exhaust gases, thus providing cleaner exhaust.

To avoid damage to the catalytic converter:

- Use only unleaded gasoline. Even a small amount of leaded gasoline will damage the catalytic converter.
- Never start the engine by pushing or pulling the vehicle.
- Avoid racing the engine.
- Never turn off the ignition switch while the vehicle is moving.
- Keep your engine tuned-up. If you feel the engine running rough (misfiring, backfiring or incomplete combustion), have your vehicle checked and repaired by an

– CONTINUED –

authorized SUBARU dealer.

- Do not apply undercoating or rust prevention treatment to the heat shield of catalytic converter and the exhaust system.
- Do not drive with an extremely low fuel level.

Periodic inspections

To keep your vehicle in the best condition at all times, always have the recommended maintenance services listed in the maintenance schedule in the “Warranty and Maintenance Booklet” performed at the specified time or mileage intervals.

Driving in foreign countries

When planning to use your vehicle in another country:

- Confirm the availability of the correct fuel. Refer to “Fuel requirements” ☞7-3.
- Comply with all regulations and requirements of each country.

Driving tips for AWD vehicles

WARNING

- **Always maintain a safe driving speed according to the road and weather conditions in order to avoid having an accident on a sharp turn, during sudden braking or under other similar conditions.**
- **Always use the utmost care in driving – overconfidence because you are driving an All-Wheel Drive vehicle could easily lead to a serious accident.**
- **When replacing or installing tire (s), all four tires must be the same for the following items.**

  (a) Size

  (b) Circumference

  (c) Speed symbol

  (d) Load index

  (e) Construction

  (f) Manufacturer

  (g) Brand (tread pattern)

  (h) Degrees of wear

  For items (a) to (d), you must obey the specification that is printed on the tire placard. The tire placard is located on the driver's door pillar.

  If all four tires are not the same in items (a) to (h), it may lead to serious mechanical damage to the drive train of your car and affect the following factors.

  — Ride

  — Handling

  — Braking

  — Speedometer/Odometer calibration

  — Clearance between the body and the tires

  It also may be dangerous and lead to loss of vehicle control, and it can lead to an accident.

CAUTION

If you use a temporary spare tire to replace a flat tire, be sure to use the original temporary spare tire stored in the vehicle. Using other sizes may result in severe mechanical damage to the drive train of your vehicle.

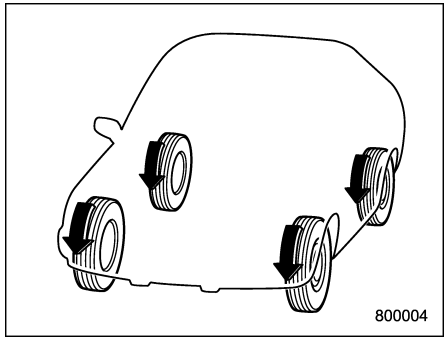

All-Wheel Drive distributes the engine power to all four wheels. AWD vehicles provide better traction when driving on slippery, wet or snow-covered roads and when moving out of mud, dirt and sand. By shifting power between the front and rear wheels, SUBARU AWD can also provide added traction during acceleration, and added engine braking force during deceleration.

Therefore, your SUBARU AWD vehicle may handle differently than an ordinary two wheel drive vehicle and it contains some features unique to AWD. For safety purposes as well as to avoid damaging the AWD system, you should keep the following tips in mind:

- An AWD vehicle is better able to climb steeper roads under snowy or slippery

– CONTINUED –

conditions than a two wheel drive vehicle. There is little difference in handling, however, during extremely sharp turns or sudden braking. Therefore, when driving down a slope or turning corners, be sure to reduce your speed and maintain an ample distance from other vehicles.

- Always check the cold tire pressure before starting to drive. The recommended tire pressure is provided on the tire placard, which is located on the door pillar on the driver's side.
- There are some precautions that you must observe when towing your vehicle. For detailed information, refer to "Towing" ☞9-14.

Off road driving

⚠ WARNING

- **Always maintain a safe driving speed according to the road and weather conditions in order to avoid having an accident on a sharp turn, during sudden braking or under other similar conditions.**
- **Always use the utmost care in driving – overconfidence because you are driving an All-Wheel Drive vehicle could easily lead to a serious accident.**

■ Legacy

Your AWD vehicle is neither a conventional off-road vehicle nor an all terrain vehicle. It is a passenger car designed primarily for on-road use. The AWD feature gives it some limited off-road capabilities in situations in which the driving surface is relatively level, obstruction-free and otherwise similar to on-road driving conditions. Operating it under other than those conditions could subject the vehicle to excessive stress which might result in damage not eligible for repair under warranty. If you do take your SUBARU off road, you should review the common sense precautions in the next section (applicable to the Outback) for general guidance. But please keep in mind that your vehicle's off-road capabilities are more limited than those of the Outback.

Never attempt to drive through pools and puddles, or roads flooded with water. Water entering the engine air intake or the exhaust pipe or water splashing onto electrical parts may damage your vehicle and may cause it to stall.

■ Outback

⚠ CAUTION

Frequent driving of an AWD model under hard-driving conditions such as rough roads or off roads will necessitate more frequent replacement of the following items than that specified in the maintenance schedule described in the "Warranty and Maintenance Booklet".

- **Engine oil**
- **Brake fluid**

Remember that damage done to your SUBARU while operating it off-road and not using common sense precautions such as those

listed above is not eligible for warranty coverage.

Because of the AWD feature and higher ground clearance, you can drive your SUBARU on ordinary roads or off-road. But please keep in mind that an AWD SUBARU is a passenger car and is neither a conventional off-road vehicle nor an all-terrain vehicle. If you do take your SUBARU off-road, certain common sense precautions such as those in the following list should be taken.

▼ Before driving

- Make certain that you and all of your passengers are wearing seatbelts.
- Carry some emergency equipment, such as a towing rope or chain, a shovel, wheel blocks, first aid kit and cell phone or citizens band radio.
- Secure all cargo carried inside the vehicle and make certain that it is not piled higher than the seatbacks. During sudden stops or jolts, unsecured cargo could be thrown around in the vehicle and cause injury. Do not pile heavy loads on the roof. Those loads raise the vehicle's center of gravity and make it more prone to tip over.
- Never equip your vehicle with tires larger than those specified in this manual.

▼ During driving

General precautions:

- Drive carefully. Do not take unnecessary risks by driving in dangerous areas or over rough terrain.
- Slow down and employ extra caution at all times. When driving off-road, you will not have the benefit of marked traffic lanes, banked curves, traffic signs and the like.
- Do not drive across steep slopes. Instead, drive either straight up or straight down the slopes. A vehicle can much more easily tip over sideways than it can end over end. Avoid driving straight up or down slopes that are too steep.
- Avoid sharp turning maneuvers, especially at higher speeds.
- Do not grip the inside or spokes of the steering wheel. A bad bump could jerk the wheel and injure your hands. Instead, drive with your fingers and thumbs on the outside of the rim.
- Do not drive or park over or near flammable materials such as dry grass or fallen leaves, as they may burn easily. The exhaust system is very hot while the engine is running and right after the engine stops. This could create a fire hazard.

Precautions when driving under especially dangerous situations:

- If driving through water, such as when crossing shallow streams:
  - First, check the depth of the water and the bottom of the stream bed for firmness.
  - Next, ensure that the bed of the stream is flat.
  - Then, drive slowly and completely through the stream. The water should be shallow enough that it does not reach the vehicle's undercarriage.
- Water entering the engine air intake or the exhaust pipe or water splashing onto electrical parts may damage your vehicle and may cause it to stall. Never drive through rushing water. Regardless of its depth, it can wash away the ground from under your tires, resulting in possible loss of traction and even vehicle rollover.
- If you must rock the vehicle to free it from sand or mud, depress the accelerator pedal slightly and move the select lever back and forth between "D" and "R" repeatedly. Do not race the engine. For the best possible traction, avoid spinning the wheels when trying to free the vehicle.
- When the road surface is extremely slippery, you can obtain better traction by starting the vehicle with the transmission in 2nd than 1st. Refer to "Selection of manual

– CONTINUED –

mode” ☞7-27.

▼ **After driving**

- Always check your brakes for effectiveness immediately after driving in sand, mud or water. Do this by driving slowly and stepping on the brake pedal. Repeat that process several times to dry out the brake discs and brake pads.
- After driving through tall grass, mud, rocks, sand, rivers, etc., check that there is no grass, bush, paper, rags, stones, sand, etc. adhering to or trapped on the underbody. Clear off any such matter from the underbody. If the vehicle is used with these materials trapped or adhering to the underbody, a mechanical breakdown or fire could occur.
- Wash the vehicle’s underbody after off-road driving. Suspension components are particularly prone to dirt buildup, so they need to be washed thoroughly.

Winter driving

■ Operation during cold weather

Carry some emergency equipment, such as a window scraper, a bag of sand, flares, a small shovel and jumper cables.

Check the battery and cables. Cold temperatures reduce battery capacity. The battery must be in good condition to provide enough power for cold winter starts.

It normally takes longer to start the engine in very cold weather conditions. Use an engine oil of a proper grade and viscosity for cold weather. Using heavy summer oil will make it harder to start the engine.

Keep the door locks from freezing by squirting them with deicer or glycerin.

Forcing a frozen door open may damage or separate the rubber weather strips around the door. If the door is frozen, use hot water to melt the ice, and afterwards thoroughly wipe the water away.

Use a windshield washer fluid that contains an antifreeze solution. Do not use engine antifreeze or other substitutes because they may damage the paint of the vehicle.

SUBARU Windshield Washer Fluid contains 58.5% methyl alcohol and 41.5% surfactant, by volume. Its freezing temperature varies according to how much it is diluted, as indicated in the following table.

Washer Fluid Concentration	Freezing Temperature
30%	**10.4°F (−12°C)**
50%	**−4°F (−20°C)**
100%	**−49°F (−45°C)**

In order to prevent freezing of washer fluid, check the freezing temperatures in the table above when adjusting the fluid concentration to the outside temperature.

If you fill the reservoir tank with a fluid with a different concentration from the one used previously, purge the old fluid from the piping between the reservoir tank and washer nozzles by operating the washer for a certain period of time. Otherwise, if the concentration of the fluid remaining in the piping is too low for the outside temperature, it may freeze and block the nozzles.

⚠ CAUTION

- **Adjust the washer fluid concentration appropriately for the outside temperature. If the concen-**

tration is inappropriate, sprayed washer fluid may freeze on the windshield and obstruct your view, and the fluid may freeze in the reservoir tank.

- **State or local regulations on volatile organic compounds may restrict the use of methanol, a common windshield washer anti-freeze additive. Washer fluids containing non-methanol anti-freeze agents should be used only if they provide cold weather protection without damaging your vehicle's paint, wiper blades or washer system.**

▼ Before driving your vehicle

Before entering the vehicle, remove any snow or ice from your shoes because that could make the pedals slippery and driving dangerous.

While warming up the vehicle before driving, check that the accelerator pedal, brake pedal, and all other controls operate smoothly.

Clear away ice and snow that has accumulated under the fenders to avoid making steering difficult. During severe winter driving, stop when and where it is safe to do so and check under the fenders periodically.

▼ Parking in cold weather

⚠ WARNING

Snow can trap dangerous exhaust gases under your vehicle. Keep snow clear of the exhaust pipe and from around your vehicle if you park the vehicle in snow with the engine running.

⚠ CAUTION

- **Do not use the parking brake when parking for long periods in cold weather since it could freeze in that position.**
- **When the vehicle is parked in snow or when it snows, raise the wiper blades off the glass to prevent damage to them.**
- **Under either of the following conditions, icing may develop on the brake system, which could cause poor braking action.**
  - **When the vehicle has been left parked after use on roads heavily covered with snow**
  - **When the vehicle has been left parked during a snowstorm**

  Check for snow or ice buildup on the suspension, disc brakes and brake hoses underneath the vehicle. If there is caked snow or ice, remove it, being careful not to damage the disc brakes and brake hoses and ABS harness.

When parking for long periods in cold weather, you should observe the following tips.

1. Place the select lever in the "P" position.
2. Use tire stops under the tires to prevent the vehicle from moving.

▼ Refueling in cold weather

To help prevent moisture from forming in the fuel system and the risk of its freezing, use of an antifreeze additive in the fuel tank is recommended during cold weather.

Use only additives that are specifically designed for this purpose. When an anti-freeze additive is used, its effect lasts longer if the tank is refilled whenever the fuel level reaches half empty.

If your SUBARU is not going to be used for an extended period, it is best to have the fuel tank filled to capacity.

– CONTINUED –

■ Driving on snowy and icy roads

⚠ WARNING

Do not use the cruise control on slippery roads such as snowy or icy roads. This may cause loss of vehicle control.

⚠ CAUTION

Avoid prolonged continuous driving in snowstorms. Snow will enter the engine's intake system and may hinder the airflow, which could result in engine shutdown or even breakdown.

To prevent skidding and slipping, avoid sudden braking, abrupt acceleration, high-speed driving, and sharp turning when driving on snowy or icy roads.

Always maintain ample distance between your vehicle and the vehicle ahead of you to avoid the need for sudden braking.

To supplement the foot brake, use the engine brake effectively to control the vehicle speed. (Shift into a lower gear when necessary.)

Avoid shifting down abruptly. Such behavior can cause the wheels to lock, possibly leading to loss of vehicle control.

An anti-lock brake system (ABS) enhances your vehicle's braking performance on snowy and icy roads. For information about braking on slippery surfaces, refer to "ABS (Anti-lock Brake System)" ☞7-31 and "Vehicle Dynamics Control system" ☞7-33.

▼ Wiper operation when snowing

Before driving in cold weather, make sure the wiper blade rubbers are not frozen to the windshield or rear window.

If the wiper blade rubbers are frozen to the windshield or rear window, perform the following procedure.

- To thaw the windshield wiper blade rubbers, use the defroster with the airflow selection in "" and the temperature set for maximum warmth until the wiper blade rubbers are completely thawed. Refer to "Climate control" ☞4-1.
- If your vehicle is equipped with a wiper deicer, use it. It is helpful to thaw the windshield wiper blade rubbers. Refer to "Defogger and deicer" ☞3-61.
- To thaw the rear wiper blade rubbers, use the rear window defogger. Refer to "Defogger and deicer" ☞3-61.

When driving in snow, if frozen snow starts to stick on the surface of the windshield despite wiper operation, use the defroster with the airflow selection in "" and the temperature set for maximum warmth. After the windshield gets warmed enough to melt the frozen snow on it, wash it away using the windshield washer. Refer to "Windshield washer" ☞3-59.

Snow stuck on the wiper arm prevents the wiper from working effectively. If snow is stuck on the wiper arm, pull off the road to a safe place, then remove it. If you stop the vehicle at road side, use the hazard warning flasher to alert other drivers. Refer to "Hazard warning flasher" ☞3-7.

We recommend use of non-freezing type wiper blades (winter blades) during the seasons you could have snow and freezing temperatures. Blades of this type give superior wiping performance in snowy conditions. Be sure to use blades that are suitable for your vehicle.

⚠ CAUTION

During high-speed driving, non-freezing type wiper blades may not perform as well as standard wiper blades. If this happens, reduce the vehicle speed.

NOTE

When the season requiring non-freezing type wiper blades is over, replace them with standard wiper blades.

■ Corrosion protection

Refer to “Corrosion protection” ☞10-4.

■ Snow tires

⚠ WARNING

- **When replacing or installing winter tire(s), all four tires must be the same for the following items.**
  (a) Size
  (b) Circumference
  (c) Speed symbol
  (d) Load index
  (e) Construction
  (f) Manufacturer
  (g) Brand (tread pattern)
  (h) Degrees of wear

  For items (a) to (d), you must obey the specification that is printed on the tire placard. The tire placard is located on the driver’s door pillar.

  If all four tires are not the same in items (a) to (h), it may lead to serious mechanical damage to the drive train of your car and affect the following factors.
  — Ride
  — Handling
  — Braking
  — Speedometer/Odometer calibration
  — Clearance between the body and the tires

  It also may be dangerous and lead to loss of vehicle control, and it can lead to an accident.
- **Do not use a combination of radial, belted bias or bias tires since it may cause dangerous handling characteristics and lead to an accident.**

Your vehicle is equipped with “all season tires” which are designed to provide an adequate measure of traction, handling and braking performance in year-round driving. In winter, it may be possible to enhance performance through use of tires designed specifically for winter driving conditions.

If you choose to install winter tires on your vehicle, be sure to use the correct tire size and type. You must install four winter tires that are of the same size, construction, brand and load range and you should never mix radial, belted bias or bias tires since this may result in dangerous handling characteristics. When you choose a tire, make sure that there is enough clearance between the tire and vehicle body.

Remember to drive with care at all times regardless of the type of tires on your vehicle.

– CONTINUED –

■ Tire chains

⚠ CAUTION

Tire chains cannot be used on your vehicle because of the lack of clearance between the tires and vehicle body.

NOTE

When tire chains cannot be used, use of another type of traction device (such as spring chains) may be acceptable if use on your vehicle is recommended by the device manufacturer, taking into account tire size and road conditions. Follow the device manufacturer's instructions, especially regarding maximum vehicle speed.

To help avoid damage to your vehicle, drive slowly, readjust or remove the device if it is contacting your vehicle, and do not spin your wheels. Damage caused to your vehicle by use of a traction device is not covered under warranty.

Make certain that any traction device you use is an SAE class S device, and use it on the front wheels only. Always use the utmost care when driving with a traction device. Overconfidence because you are using a traction device could easily lead to a serious accident.

■ Rocking the vehicle

If you must rock the vehicle to free it from snow, sand, or mud, depress the accelerator pedal slightly and move the select lever back and forth between "D" and "R" repeatedly. Do not race the engine. For the best possible traction, avoid spinning the wheels when trying to free the vehicle.

When the road surface is extremely slippery, you can obtain better traction by starting the vehicle with the transmission in 2nd than 1st.

For information on holding the transmission in 2nd position, refer to "Selection of manual mode" ☞7-27.

Loading your vehicle

⚠ WARNING

Never allow passengers to ride on a folded rear seatback, in the trunk or in the cargo area. Doing so may result in serious injury.

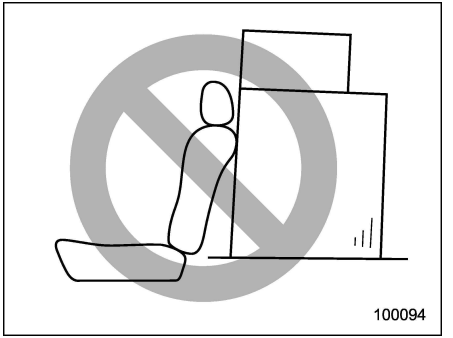

⚠ WARNING

- **Never stack luggage or other cargo higher than the top of the seatback because it could tumble forward and injure passengers in the event of a sudden stop or accident. Keep luggage or cargo low, as close to the floor as**

possible.

- When you carry something inside the vehicle, secure it whenever you can to prevent it from being thrown around inside the vehicle during sudden stops, sharp turns or in an accident.
- Do not pile heavy loads on the roof. These loads raise the vehicle's center of gravity and make it more prone to tip over.
- Secure long items properly to prevent them from shooting forward and causing serious injury during a sudden stop.
- Never exceed the maximum load limit. If you do, some parts on your vehicle can break, or it can change the way your vehicle handles. This could result in loss of control and cause personal injury. Also, overloading can shorten the life of your vehicle.
- Do not place anything on the rear shelf behind the rear seatback (Legacy) or the extended cargo area cover (Outback – if equipped). Such items could tumble forward in the event of a sudden stop or a collision. This could cause serious injury.

CAUTION

Do not carry spray cans, containers with flammable or corrosive liquids or any other dangerous items inside the vehicle.

NOTE

For better fuel economy, do not carry unneeded cargo.

Vehicle capacity weight

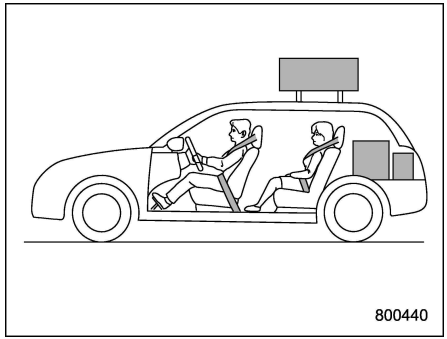

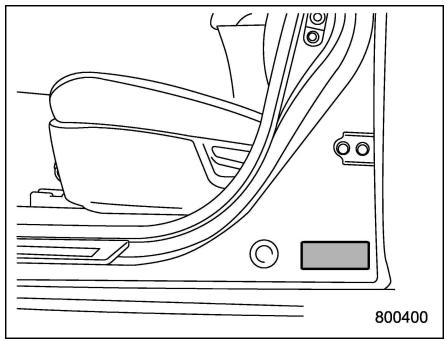

The load capacity of your vehicle is determined by weight, not by available cargo space. The maximum load you can carry in your vehicle is shown on the vehicle placard attached to the driver's

– CONTINUED –

side door pillar. It includes the total weight of the driver and all passengers and their belongings, any optional equipment such as a trailer hitch, roof rack or bike carrier, etc., and the tongue load of a trailer.

■ GVWR and GAWR (Gross Vehicle Weight Rating and Gross Axle Weight Rating)

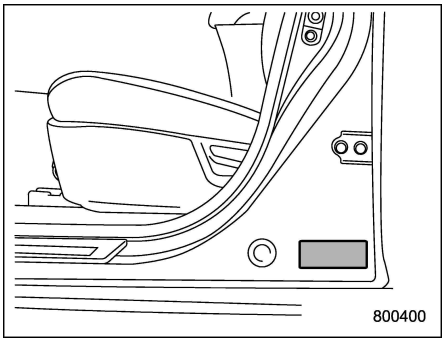

Certification label

The certification label attached to the driver's side door shows GVWR (Gross Vehicle Weight Rating) and GAWR (Gross Axle Weight Rating).

The GVW (Gross Vehicle Weight) must never exceed the GVWR. GVW is the combined total of weight of the vehicle, fuel, driver, all passengers, luggage, any optional equipment and trailer tongue load. Therefore, the GVW changes depending on the situation.

In addition, the total weight applied to each axle (GAW) must never exceed the GAWR. The front and rear GAWs can be adjusted by relocating luggage inside the vehicle.

Even if the total weight of your luggage is lower than the vehicle capacity weight, either front or rear GAW may exceed the GAWR, depending on the distribution of the luggage.

When possible, the load should be evenly distributed throughout the vehicle.

If you carry heavy loads in the vehicle, you should confirm that GVW and front and rear GAWs are within the GVWR and GAWR by putting your vehicle on a vehicle scale, found at a commercial weighing station.

Do not use replacement tires with a lower load range than the originals because they may lower the GVWR and GAWR limitations. Replacement tires with a higher load range than the originals do not increase the GVWR and GAWR limitations.

■ Roof rack (Outback – if equipped)

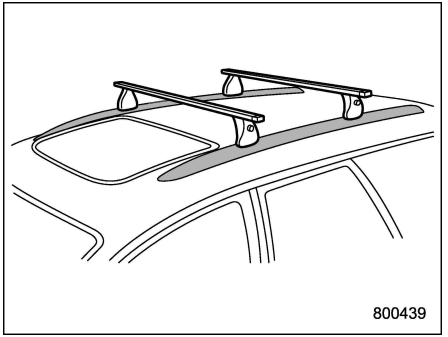

⚠ CAUTION

- **For cargo carrying purposes, the roof rail must be used together with the roof rack. The roof rail must never be used alone to carry cargo. Otherwise, damage to the roof or paint or a dangerous road hazard due to loss of cargo could result.**
- **When using the roof rack, make sure that the total weight of the roof rack, carrying attachments and cargo does not exceed the maximum load limit. Overloading may cause damage to the vehicle**

and create a safety hazard.

Cargo can be carried on the roof after securing the roof rack to the roof. When installing the roof rack on the roof, follow the manufacturer's instructions.

The maximum load limit of the cargo, roof rack and carrying attachments must not exceed **176 lbs (80 kg)**. Place the heaviest load at the bottom, nearest the roof, and evenly distribute the cargo. Always properly secure all cargo.

▼ **Installing carrying attachments on the roof rack**

When installing any carrying attachments such as the load carriers, crossbars, bike carrier, ski carrier, kayak carrier, cargo basket, etc., follow the manufacturer's instructions of the load capacity and make sure that the attachments are securely installed. Use only attachments designed specifically for the crossbars. Before operating the vehicle, make sure that the cargo is properly secured on the attachment.

NOTE

Remember that the vehicle's center of gravity is altered with the weight of the load on the roof, thus affecting the driving characteristics.

Drive carefully. Avoid rapid starts, hard cornering and abrupt stops. Crosswind effects will be increased.

■ Roof rails with integrated crossbars (Outback – if equipped)

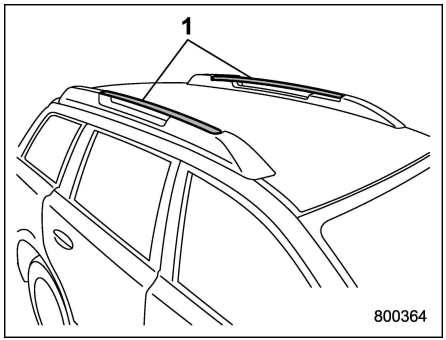

1) Integrated crossbars

⚠ CAUTION

- **For cargo carrying purposes, the bars must be used as crossbars and be used together with the genuine SUBARU carrying attachment. The bars must never be used alone to carry cargo. Otherwise, damage to the roof or paint or a dangerous road hazard due to loss of cargo could result.**
- **When using the bars as crossbars, make sure that the total weight of the carrying attachment and cargo does not exceed the 150 lbs (67.5 kg). Overloading may cause damage to the vehicle and create a safety hazard.**

The bars can be used as crossbars. Cargo can be carried after setting the bars as crossbars and installing the genuine SUBARU carrying attachment.

When you carry cargo on the roof using the crossbars and a carrying attachment, never exceed the maximum load limit explained in the following. You should also be careful that your vehicle does not exceed the Gross Vehicle Weight Rating (GVWR) and front and rear Gross Axle Weight Rating (GAWR). For information on loading cargo into or onto your vehicle, refer to "Loading your vehicle" ☞8-12. The maximum load limit of the cargo and carrying attachment must not exceed the allowable load limit described in the Owner's Manual of a genuine SUBARU carrying attachment. Place the heaviest load at the bottom, nearest the roof, and evenly distribute the cargo. Always properly secure all cargo.

– CONTINUED –

▼ Installing carrying attachments on the crossbars

When installing any carrying attachments such as the load carriers, crossbars, bike carrier, ski carrier, kayak carrier, cargo basket, etc., follow the manufacturer's instructions of the load capacity and make sure that the attachments are securely installed. Use only attachments designed specifically for the crossbars. Before operating the vehicle, make sure that the cargo is properly secured on the attachment.

NOTE

- **Remember that the vehicle's center of gravity is altered with the weight of the load on the roof, thus affecting the driving characteristics. Drive carefully, avoid rapid starts, hard cornering and abrupt stops. Crosswind effects will be increased.**
- **Restore the bars to the original position when the bars are not used as crossbars.**

▼ How to use as crossbars

⚠ CAUTION

- **Do not raise the bar higher than necessary. The base of the bar may be damaged.**
- **Be careful not to contact the bars while sliding them. Otherwise, the bars may be scratched or the latch portions may be damaged.**
- **Do not slide the bar more than necessary when sliding the bar. The base of the bar may be damaged.**
- **Do not allow the bar to fall on or contact the roof panel or the moonroof when sliding the bar. Otherwise the roof panel may be dented or the glass of the moonroof may be damaged.**

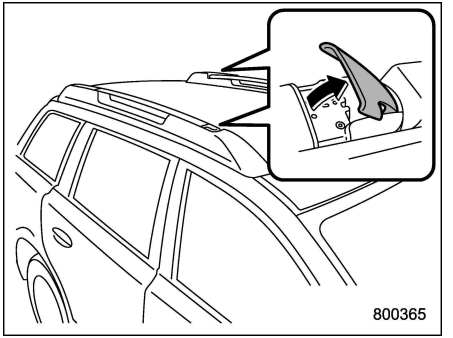

1. Pull out the integrated crossbars from the roof rail holders by pulling up the covers.

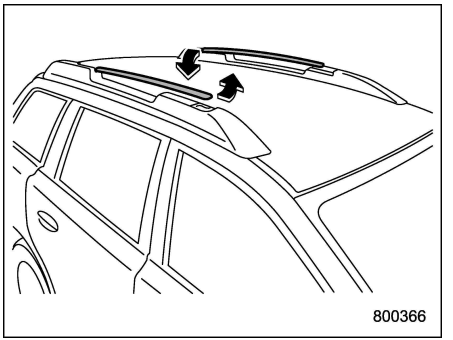

2. Slide the bars in the direction shown in the illustration.

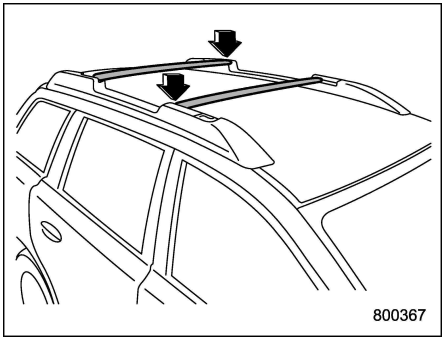

3. Install the bars into the holders.
4. Make sure that the latches are fitted securely.

▽ **How to change the position of the crossbar**

⚠ WARNING

Carefully read the warning label attached to the roof rail.

You can change the position of the rear crossbar. To change the position, perform the following procedure.

1. Take out the torque wrench from the under-floor storage compartment.

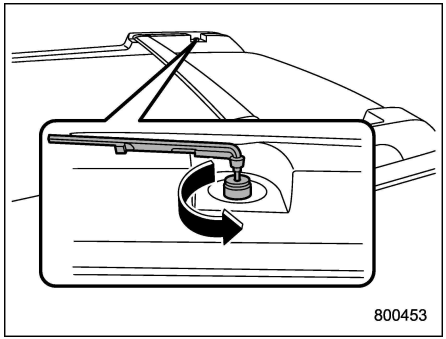

2. Remove the cap of the roof rail holder by using the torque wrench.

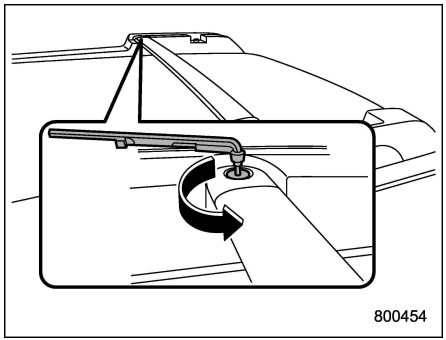

3. Remove the bolt of the crossbar by using the torque wrench.

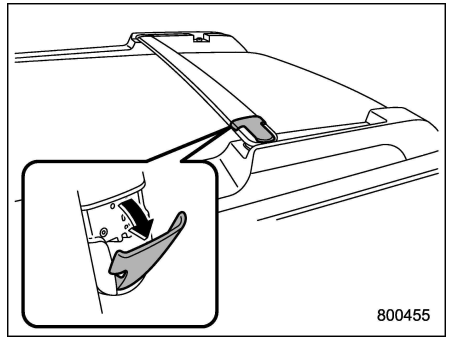

4. Pull out the crossbar from the roof rail holder by pulling up the cover.
5. Install the crossbar into the other holder.

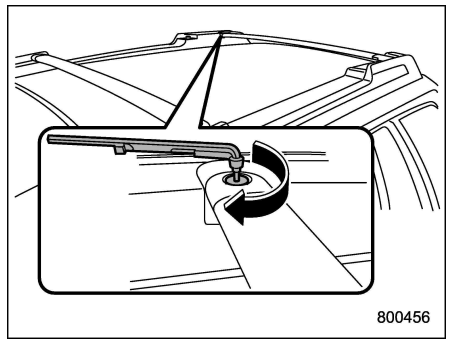

6. Tighten the bolt of the crossbar by using the torque wrench. The tightening

– CONTINUED –

torque is approximately 8.9 ± 2.2 lbf·ft (12 ± 3.0 N·m, 1.2 ± 0.3 kgf·m).

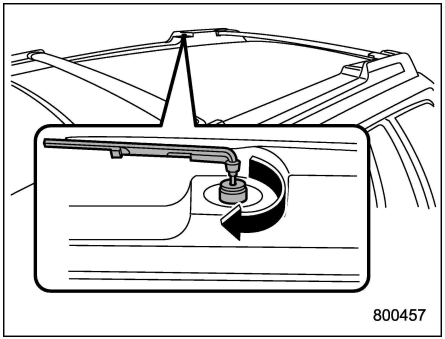

7. Install the plastic plug by pushing it into the hole until it is fully seated.

▼ **How to re-stow bars**

⚠ CAUTION

Do not use the bars as roof rails when the bars are stowed.

1. Check that the rear crossbar is stowed in the front side holder.

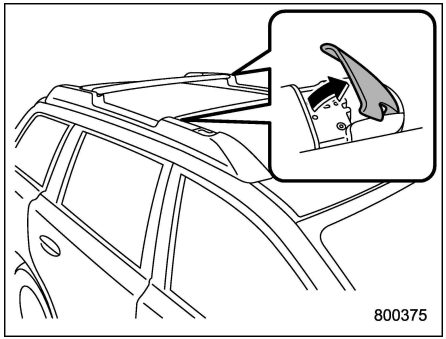

2. Pull out the crossbars from the roof rail holders by pulling up the covers.

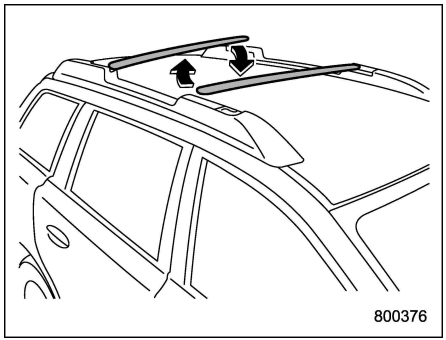

3. Slide the bars in the direction shown in the illustration.

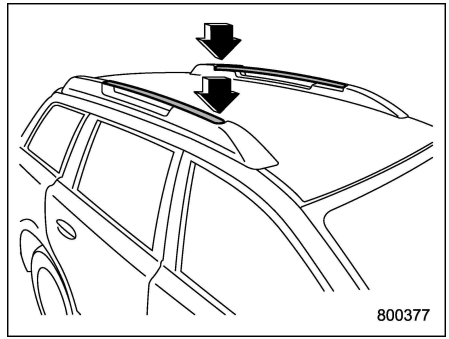

4. Install the bars into the holders.
5. Make sure that the latches are fitted securely.

▼ **Rope hook (attached to the roof rail)**

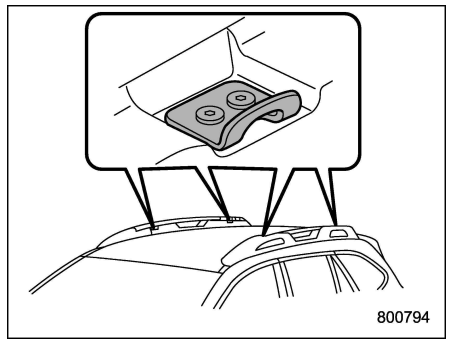

Rope hook

CAUTION

- **When you use the rope hooks, always secure the rope at all four hook points.**
- **Do not tighten the rope excessively. Otherwise, it may lead to damage to the vehicle body or cargo.**
- **Check that the rope is not loose before driving the vehicle.**
- **When you use the rope hooks, never exceed the maximum load limit.**

Load limit:
Observe the load limit that is indicated on the rope hook.

Trailer hitch (Outback – if equipped)

WARNING

- **Never exceed the maximum weight specified for the trailer hitch. Exceeding the maximum weight could cause an accident resulting in serious personal injuries. Permissible trailer weight changes depending on the situation. For possible recommendations and limitations, refer to "Trailer towing (Outback)" ☞8-22.**
- **Trailer brakes are required when the towing load exceeds 1,000 lbs (453 kg). Be sure your trailer has safety chains and that each chain will hold the trailer's maximum gross weight. Towing trailers without safety chains could create a traffic safety hazard if the trailer separates from the hitch due to coupling damage or hitch ball damage.**
- **Be sure to check the hitch pin and safety pin for positive locking placement before towing a trailer. If the ball mount comes off the hitch receiver, the trailer could get loose and create a traffic safety hazard.**
- **Use only the ball mount supplied with this hitch. Use the hitch only as a weight carrying hitch. Do not use with any type of weight distributing hitch.**
- **The standard bumper beam must be installed after you remove the trailer hitch. Consult a SUBARU dealer for purchase of a standard bumper beam if you do not have the original.**
- **If a trailer hitch is installed, it is not possible to install the rear towing hook.**

The maximum gross trailer weight and maximum gross tongue weight are indicated in the following table.

	Maximum gross trailer weight	Maximum gross tongue weight
Outback	2,700 lbs (1,224 kg)	200 lbs (90 kg)

When towing a trailer, refer to "Trailer towing (Outback)" ☞8-22.

– CONTINUED –

■ Connecting a trailer

1. Remove the receiver cover from the hitch receiver tube. Then insert the ball mount into the hitch receiver tube.

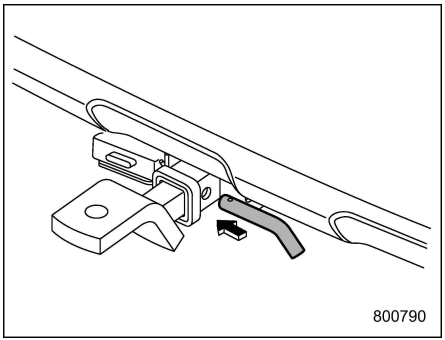

2. Insert the hitch pin into the hole located on the hitch receiver tube so that the pin passes through the ball mount.

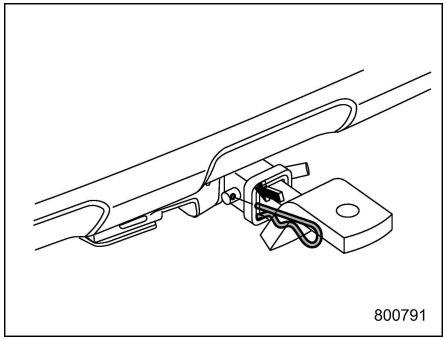

3. Insert the safety pin through the provided hole on the hitch pin securely.

4. Check the ball mount assembly by pulling on it to make sure it does not come off the hitch receiver.

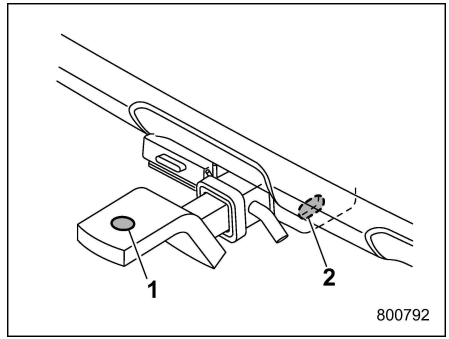

1) Hitch ball installation point
2) Hooks for safety chains

5. Use only a hitch ball that is appropriate for the ball mount and your trailer. The hitch ball must be securely installed on the ball mount.

6. Connect your trailer to the hitch ball.

7. Connect the trailer and the hitch with safety chains that will hold the trailer's maximum gross weight. The chains should cross under the trailer tongue to prevent the tongue from dropping onto the ground in case it should disconnect from the hitch ball. Allow sufficient slack in the chains taking tight turn situations into account; however, be careful not to let them drag on the ground.

WARNING

Do not connect safety chains to any part of the vehicle other than the safety chain hooks.

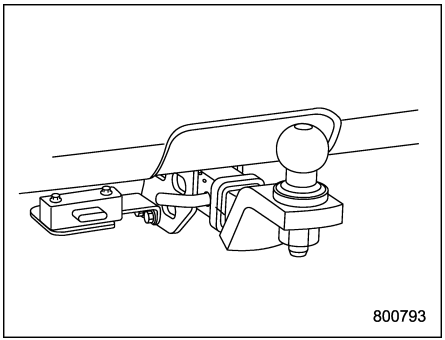

Hitch harness connector

8. Connect the hitch wire harness's black four-pin wire connector to the towing trailer's wire harness.

9. Confirm proper function of the hitch wire harness by individually activating the brake, stop and turn signal lights on the trailer.

NOTE

Always disconnect the trailer wire harness before launching or retrieving a watercraft.

■ If not towing a trailer

- Remove the ball mount from the hitch receiver tube and insert the receiver cover onto the hitch receiver tube.
- Place the dust cap over the four-pin connector of the hitch wire harness to protect against possible damage.
- Occasionally lubricate terminals of the four-pin connector using terminal grease.

Trailer towing (Legacy)

Your vehicle is neither designed nor intended to be used for trailer towing. Therefore, never tow a trailer with your vehicle.

SUBARU assumes no responsibility for injuries or vehicle damage that may result from trailer towing, from any trailer towing equipment or from any errors or omissions in the instructions accompanying such equipment. SUBARU warranties do not apply to vehicle damage or malfunction caused by trailer towing.

Trailer towing (Outback)

Your vehicle is designed and intended to be used primarily as a passenger-carrying vehicle. Towing a trailer puts additional loads on your vehicle's engine, drivetrain, brakes, tires and suspension and has an adverse effect on fuel economy and air conditioning system cooling performance.

If you do decide to tow a trailer, your safety and satisfaction depend upon proper use of correct equipment and cautious operation of your vehicle. Seek the advice of your SUBARU dealer to assist you in purchasing a hitch and other necessary towing equipment appropriate for your vehicle. Do not use towing equipment other than genuine SUBARU towing equipment. In addition, be sure to follow the instructions on correct installation and use provided by SUBARU.

SUBARU assumes no responsibility for injuries or vehicle damage that result from trailer towing equipment, or from any errors or omissions in the instructions accompanying such equipment or for your failure to follow the proper instructions. Regularly check that the hitch mounting bolts and nuts are tightened securely.

■ Warranties and maintenance

SUBARU warranties do not apply to vehicle damage or malfunction caused by trailer towing. If you use your vehicle to tow a trailer, more frequent maintenance will be required due to the additional load. (Refer to "Maintenance schedule under severe driving conditions" in the "Warranty and Maintenance Booklet".)

Under no circumstances should a trailer be towed with a new vehicle or a vehicle with any new powertrain component (engine, transmission, differential, wheel bearings, etc.) for the first 1,000 miles (1,600 km) of driving.

■ Maximum load limits

⚠ WARNING

Never exceed the maximum load limits explained in the following. Exceeding the maximum load limits could cause personal injury and/or vehicle damage.

⚠ CAUTION

- **Adequate size trailer brakes are required when the trailer and its cargo exceed 1,000 lbs (453 kg) total weight.**
- **Before towing a trailer, check the trailer total weight, GVW, GAWs and tongue load. Make sure the load and its distribution in your vehicle and trailer are acceptable.**

▼ Total trailer weight

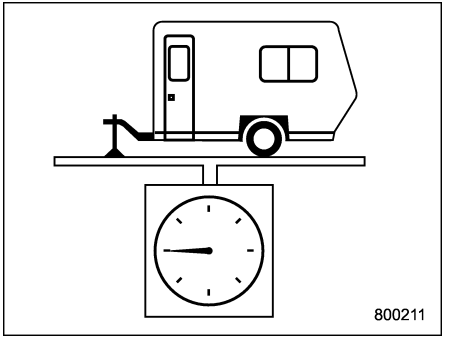

Total trailer weight

The total trailer weight (trailer weight plus its cargo load) must never exceed the maximum total trailer weight. The maximum total trailer weight is indicated in the following tables.

3.6 L models

Conditions	Maximum total trailer weight
When towing a trailer without brakes.	1,000 lbs (453 kg)
When towing a trailer with brakes.	2,700 lbs (1,224 kg)
When towing a trailer on a long uphill grade continuously for over 5 miles (8 km) with an outside temperature of 104°F (40°C) or above.	1,500 lbs (680 kg)

2.5 L models

Conditions	Maximum total trailer weight
When towing a trailer without brakes.	1,000 lbs (453 kg)
When towing a trailer with brakes.	2,700 lbs (1,224 kg)
When towing a trailer on a long uphill grade continuously for over 5 miles (8 km) with an outside temperature of 104°F (40°C) or above.	1,350 lbs (612 kg)

– CONTINUED –

▼ Gross Vehicle Weight (GVW) and Gross Vehicle Weight Rating (GVWR)

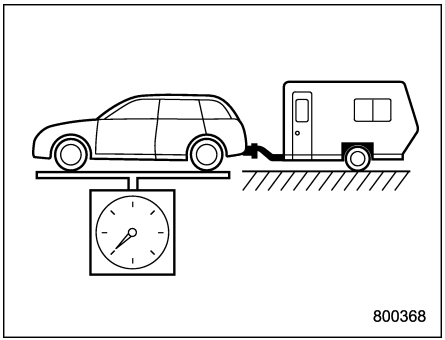

Gross Vehicle Weight

The Gross Vehicle Weight (GVW) must never exceed the Gross Vehicle Weight Rating (GVWR).

Gross Vehicle Weight (GVW) is the combined total of the weight of the vehicle, driver, passengers, luggage, trailer hitch, trailer tongue load and any other optional equipment installed on your vehicle. Therefore, the GVW changes depending on the situation. Determine the GVW each time before going on a trip by putting your vehicle and trailer on a vehicle scale.

The GVWR of your vehicle that is set by SUBARU is shown on the certification label located on the driver's door of your vehicle.

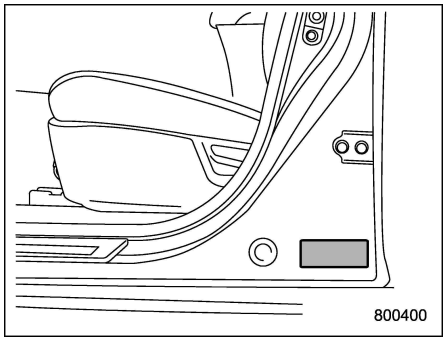

Certification label

▼ Gross Axle Weight (GAW) and Gross Axle Weight Rating (GAWR)

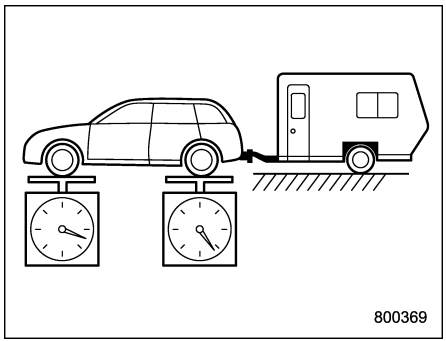

Gross Axle Weight

The total weight applied to each axle (GAW) must never exceed the Gross Axle Weight Rating (GAWR). The front and rear GAWs can be adjusted by relocating passengers and luggage inside the vehicle. The front and rear GAWR of your vehicle that are set by SUBARU are also shown on the certification label.

To check both GVWR and GAWR and to confirm that the total weight and weight distribution are within safe driving limits, you should have your vehicle and trailer weighed at a commercial weighing station.

Be sure that all cargo is firmly secured to prevent a change in weight distribution while driving.

▼ Tongue load

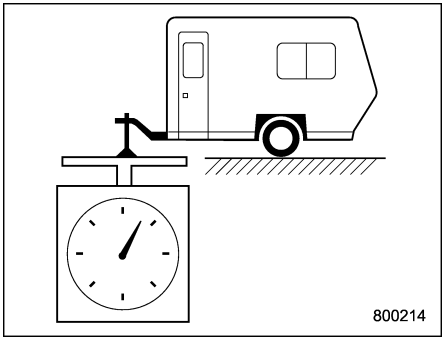

Tongue load

⚠ WARNING

If the trailer is loaded with more weight in the back of trailer's axle than in the front, the load is taken off the rear axle of the towing vehicle. This may cause the rear wheels to skid, especially during braking or when vehicle speed is reduced during cornering, resulting in oversteer, spin out and/or jackknifing.

Ensure that the trailer tongue load is from 8 to 11 percent of the total trailer weight and does not exceed the maximum value of 200 lbs (90 kg).

NOTE

For vehicles with trailer brakes, the trailer tongue load exceeds 200 lbs (90 kg) when calculated at 8% of the maximum total trailer weight.
Even in this case, the maximum value is 200 lbs (90 kg).

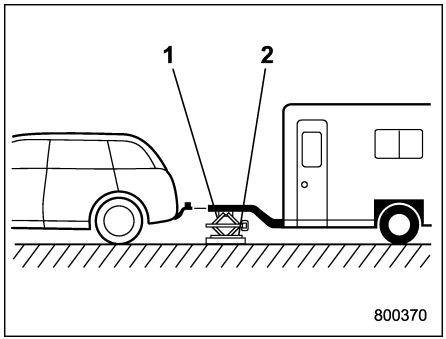

1) Jack
2) Bathroom scale

The tongue load can be weighed with a bathroom scale as shown in the following illustration. When weighing the tongue load, be sure to position the towing coupler at the height at which it would be during actual towing, using a jack as shown.

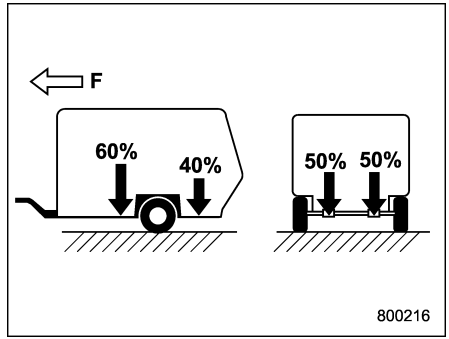

F: Front

The tongue load can be adjusted by proper distribution of the load in the trailer. Never load the trailer with more weight in the back than in the front; approximately 60 percent of the trailer load should be in the front and approximately 40 percent in the rear. Also, distribute the load as evenly as possible on both the left and right sides.

Be sure that all cargo is firmly secured to prevent a change in weight distribution while driving.

– CONTINUED –

■ Trailer Hitches

⚠ WARNING

Never drill the frame or under-body of your vehicle to install a commercial trailer hitch. If you do, dangerous exhaust gas, water or mud may enter the passenger compartment through the drilled hole. Exhaust gas contains carbon monoxide, a colorless and odorless gas which is dangerous, or even lethal, if inhaled. Also, drilling the frame or under-body of your vehicle could cause deterioration of strength of your vehicle and cause corrosion around the drilled hole.

⚠ CAUTION

- **Do not modify the vehicle exhaust system, brake system, or other systems when installing a hitch or other trailer towing equipment.**
- **Do not use axle-mounted hitches as they can cause damage to the axle housing, wheel bearings, wheels or tires.**

Do not use a trailer hitch other than genuine SUBARU trailer hitch. A genuine SUBARU hitch is available from your SUBARU dealer.

■ Connecting a trailer

▼ Trailer brakes

⚠ WARNING

- **Adequate size trailer brakes are required when the trailer and its cargo exceed 1,000 lbs (453 kg) total weight.**
- **Do not directly connect your trailer's hydraulic brake system to the hydraulic brake system in your vehicle. Direct connection would cause the vehicle's brake performance to deteriorate and could lead to an accident.**

If your trailer's total weight (trailer weight plus its cargo weight) exceeds 1,000 lbs (453 kg), the trailer is required to be equipped with its own brake system. Electric brakes or surge brakes are recommended, and must be installed properly. Check that your trailer's brakes conform with Federal, state/province and/or other applicable regulations. Your SUBARU's brake system is not designed to be tapped into the trailer's hydraulic brake system. Please ask your SUBARU dealer and professional trailer supplier for more information about the trailer's brake system.

▼ Trailer safety chains

⚠ WARNING

Always use safety chains between your vehicle and the trailer. Towing trailer without safety chains could create a traffic safety hazard if the trailer separates from the hitch due to coupling damage or hitch ball damage.

In case the trailer hitch connector or hitch ball should break or become disconnected, the trailer could get loose and create a traffic safety hazard.

For safety, always connect the towing vehicle and trailer with trailer safety chains. Two chains should be used in total, one to the right side and the other to the left side trailer tongue. Pass the chains crossing each other under the trailer tongue to prevent the trailer from dropping onto the ground in case the trailer tongue should disconnect from the hitch ball. Allow sufficient slack in the chains taking tight turn situations into account; however, be careful not to let them drag on the

ground.

▼ **Side mirrors**

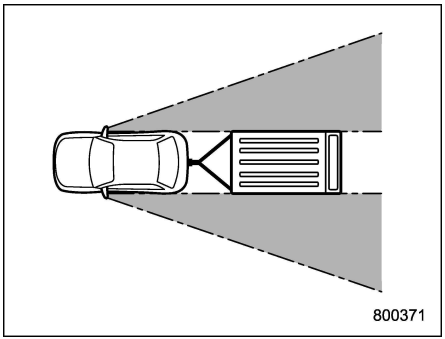

After hitching a trailer to your vehicle, check that the standard side mirrors provide a good rearward field of view without significant blind spots. If significant blind spots occur with the vehicle's standard side mirrors, use towing mirrors that conform with Federal, state/province and/or other applicable regulations.

▼ **Trailer lights**

⚠ CAUTION

Direct splicing or other improper connection of trailer lights may damage your vehicle's electrical system and cause a malfunction of your vehicle's lighting system.

Connection of trailer lights to your vehicle's electrical system requires modifications to the vehicle's lighting circuit to increase its capacity and accommodate wiring changes. To ensure the trailer lights are connected properly, please consult your SUBARU dealer. Check for proper operation of the turn signals and the stop lights each time you connect a trailer to your vehicle.

▼ **Tires**

⚠ WARNING

Never tow a trailer when the temporary spare tire is used. The temporary spare tire is not designed to sustain the towing load. Use of the temporary spare tire when towing can result in failure of the spare tire and/or less stability of the vehicle.

Make sure that all the tires on your vehicle are properly inflated. Refer to "Tires" ☞12-9 and in "GAS STATION REFERENCE" at the end of this manual.

Trailer tire condition, size, load rating and proper inflation pressure should be in accordance with the trailer manufacturer's specifications.

In the event your vehicle gets a flat tire when towing a trailer, ask a commercial road service representive or professional to repair the flat tire.

If you carry a regular size spare tire in your vehicle or trailer as a precaution against getting a flat tire, be sure that the spare tire is firmly secured.

■ Trailer towing tips

⚠ CAUTION

- **For models equipped with the BSD (Blind Spot Detection) and RCTA (Rear Cross Traffic Alert) driving support systems, when towing a trailer, press the BSD/RCTA OFF switch to deactivate the system. The system may not operate properly due to the blocked radar waves. For details about the BSD/RCTA OFF switch, refer to "BSD/RCTA OFF switch" ☞7-55.**
- **For models equipped with RAB (Reverse Automatic Braking) system, consult your SUBARU dealer for additional information about towing a trailer.**
- **Never exceed 45 mph (72 km/h) when towing a trailer in hilly**

– CONTINUED –

country on hot days.

- **When towing a trailer, steering, stability, stopping distance and braking performance will be different when compared to normal operation. You should never drive at excessive speeds but always employ extra caution when towing a trailer. You should also keep the following tips in mind.**
- **When parking on a steep slope with a trailer attached to your vehicle, the braking power of the electronic parking brake may not be sufficient since strong braking power is needed.**

▼ Before starting out on a trip

- Check the towing regulations for trailer or caravan vehicles that vary by state/region. Failure to comply with the procedures set forth will not only compromise your safety, but will also negate your insurance coverage and/or may violate the state road and traffic acts and regulations.
- Check that the vehicle and vehicle-to-hitch mounting are in good condition. If any problems are apparent, do not tow the trailer.
- Check that the vehicle rests horizontally with the trailer attached. If the vehicle is tipped sharply up at the front and down at the rear, check the total trailer weight, GVW, GAWs and tongue load again, then confirm that the load and its distribution are acceptable.
- Check that the tire pressures are correct.
- Check that the vehicle and trailer are connected properly. Confirm that
  - – the trailer tongue is connected properly to the hitch ball.
  - – the trailer lights connector is connected properly and trailer's stop lights illuminate when the vehicle's brake pedal is pressed, and that the trailer's turn signal lights flash when the vehicle's turn signal lever is operated.
  - – the safety chains are connected properly.
  - – all cargo in the trailer is secured safely in position.
  - – the side mirrors provide a good rearward field of view without a significant blind spot.
- Sufficient time should be taken to learn the "feel" of the vehicle/trailer combination before starting out on a trip. In an area free of traffic, practice turning, stopping and backing up.

▼ Driving with a trailer

- You should allow for considerably more stopping distance when towing a trailer. Avoid sudden braking because it may result in skidding or jackknifing and loss of control.
- Avoid abrupt starts and sudden accelerations.
- Avoid uneven steering, sharp turns and rapid lane changes.
- Slow down before turning. Make a longer than normal turning radius because the trailer wheels will be closer than the vehicle wheels to the inside of the turn. In a tight turn, the trailer could hit your vehicle.
- Crosswinds will adversely affect the handling of your vehicle and trailer, causing sway. Crosswinds can be due to weather conditions or the passing of large trucks or buses. If swaying occurs, firmly grip the steering wheel and promptly begin decelerating your vehicle at a gradual pace.
- When passing other vehicles, considerable distance is required because of the added weight and length caused by attaching the trailer to your vehicle.
- Reversing the vehicle with a trailer can be difficult and requires experience. Never accelerate or steer rapidly, and grip the bottom of the steering wheel with one hand.

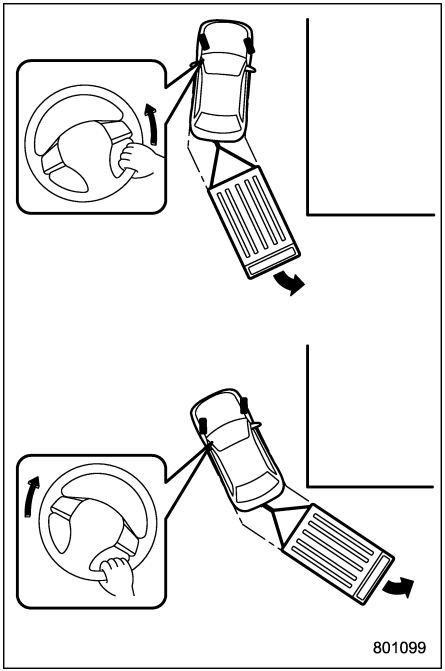

To reverse around a corner, perform the following procedure.

1. Reverse slowly and steer in the opposite direction to the way you want to turn.
2. Once the trailer begins to swing around, straighten the steering wheel.
3. Turn the wheel in the opposite direction.
4. Steer the vehicle around to be in line with the trailer, then straighten the steering again.

- If the ABS warning light illuminates while the vehicle is in motion, stop towing the trailer and have repairs performed immediately by your nearest SUBARU dealer.

▼ Driving on grades

- Before going down a steep hill, slow down and shift into lower gear (if necessary, use 1st gear) in order to utilize the engine braking effect and prevent overheating of your vehicle's brakes. Do not make sudden downshifts.
- When driving uphill in hot weather, the air conditioner may turn off automatically to protect the engine from overheating.
- When driving uphill in hot weather, because the engine and transmission are relatively prone to overheating, pay attention to the following items.
  - Temperature gauge
  - AT OIL TEMP warning light
- If any of the following conditions occur, immediately turn off the air conditioner and stop the vehicle in the nearest safe location. Refer to "If you park your vehicle in an emergency" ☞9-2 and "Engine overheating" ☞9-14.
  - Temperature gauge needle approaches the OVERHEAT zone. Refer to "Temperature gauge" ☞3-11.
  - AT OIL TEMP warning light illuminates. Refer to "AT OIL TEMP warning light" ☞3-16.
- Do not use the accelerator pedal to stay stationary on an uphill slope instead of using the parking brake or foot brake. That

– CONTINUED –

may cause the transmission fluid to overheat.

▼ Parking on a grade

Always block the wheels under both vehicle and trailer when parking. Apply the parking brake. You should not park on a hill or slope. If parking on a hill or slope cannot be avoided, you should take the following steps:

1. Apply the brakes and hold the pedal down.
2. Have someone place wheel blocks under both the vehicle and trailer wheels.
3. When the wheel blocks are in place, release the regular brakes slowly until the blocks absorb the load.
4. Apply the regular brakes and then apply the parking brake; slowly release the regular brakes.
5. Shift into “P” and shut off the engine.

If you park your vehicle in an emergency 9-2
Temporary spare tire 9-2
Maintenance tools 9-3
Legacy 9-4
Outback 9-5
Flat tires 9-5
Changing a flat tire 9-5
Storing a flat tire 9-8
Tire pressure monitoring system (TPMS) (if equipped) 9-10
TPMS screen 9-11
Jump starting 9-11
How to jump start 9-12
Engine overheating 9-14
If steam is coming from the engine compartment 9-14
If no steam is coming from the engine compartment 9-14
Towing 9-14
Towing hook and tie-down hooks/holes 9-15
Using a flat-bed truck 9-17
Towing with all wheels on the ground 9-18
Electronic parking brake – if the electronic parking brake cannot be released 9-18
Access key fob – if access key fob does not operate properly 9-19
Locking and unlocking 9-19
Switching power status 9-19
Starting engine 9-20
Trunk lid (Legacy) – if the trunk lid cannot be opened 9-20
Rear gate (Outback) – if the rear gate cannot be opened 9-21
Power rear gate - if power rear gate does not operate properly 9-22
When the power rear gate is deactivated 9-22
When the rear gate cannot be opened 9-23
When the rear gate cannot be closed 9-23
If your vehicle is involved in an accident 9-23
To restart the engine when involved in an accident 9-23
Auto lock/unlock operation when involved in an accident 9-24

If you park your vehicle in an emergency

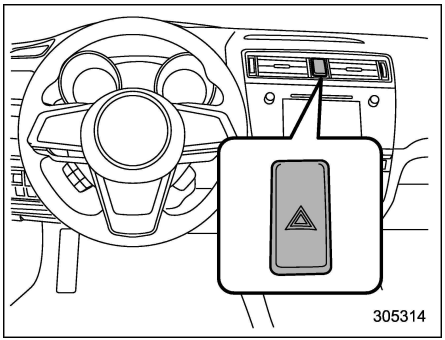

The hazard warning flasher should be used in day or night to warn other drivers when you have to park your vehicle under emergency conditions.

Avoid stopping on the road. It is best to safely pull off the road if a problem occurs.

The hazard warning flasher can be activated regardless of the ignition switch position.

Turn on the hazard warning by pressing the hazard warning flasher switch. Turn it off by pressing the switch again.

NOTE

When the hazard warning flasher is on, the turn signals do not work.

Temporary spare tire

WARNING

- **Never tow a trailer when the temporary spare tire is used. The temporary spare tire is not designed to sustain the towing load. Use of the temporary spare tire when towing can result in failure of the spare tire and/or less stability of the vehicle and may lead to an accident.**
- **When a spare tire is mounted or a wheel rim is replaced without the original pressure sensor/transmitter being transferred, the low tire pressure warning light will illuminate steadily after blinking for approximately one minute. This indicates the tire pressure monitoring system (TPMS) is unable to monitor all four road wheels. Contact your SUBARU dealer as soon as possible for tire and sensor replacement and/or system resetting.**

⚠ CAUTION

Never use any temporary spare tire other than the original. Using other sizes may result in severe mechanical damage to the drive train of your vehicle.

The temporary spare tire is stored under the under-floor storage compartment.

The temporary spare tire is smaller and lighter than a conventional tire and is designed for emergency use only. Remove the temporary spare tire and reinstall the conventional tire as soon as possible because the spare tire is designed only for temporary use.

Check the inflation pressure of the temporary spare tire periodically to keep the tire ready for use. For the correct tire pressure, refer to “Tires” ☞12-9.

When using the temporary spare tire, note the following precautions.

- Do not exceed 50 mph (80 km/h).
- Do not put a tire chain on the temporary spare tire. Because of the smaller tire size, a tire chain will not fit properly.
- Do not use two or more temporary spare tires at the same time.
- Do not drive over obstacles. This tire has a smaller diameter, so road clearance is reduced.

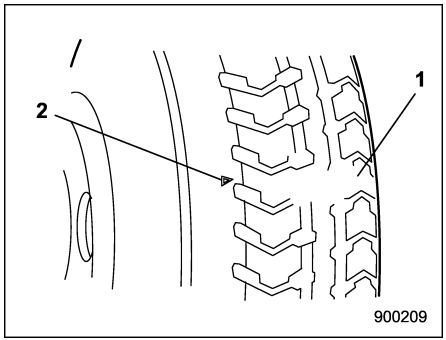

1) Tread wear indicator bar
2) Indicator location mark

- When the wear indicator appears on the tread, replace the tire.
- The temporary spare tire must be used only on a rear wheel. If a front wheel tire gets punctured, replace the wheel with a rear wheel and install the temporary spare tire in place of the removed rear wheel.

Maintenance tools

Your vehicle is equipped with the following maintenance tools.

- Jack
- Jack handle
- Screwdriver
- Towing hook (eye bolt) (Outback)
- Wheel nut wrench
- Torque wrench (Outback)

⚠ CAUTION

The torque wrench is designed to be used only when changing the position of the crossbar. Do not use the torque wrench in other cases. Otherwise, the torque wrench may be deformed.

– CONTINUED –

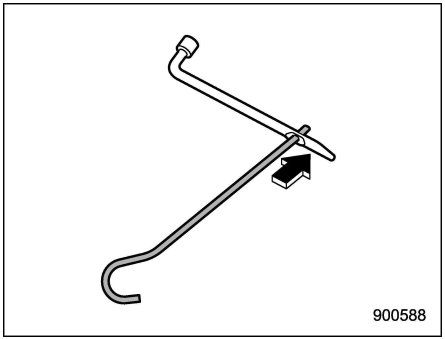

NOTE

To use the jack handle, insert the jack handle into the hole of the wheel nut wrench.

■ Legacy

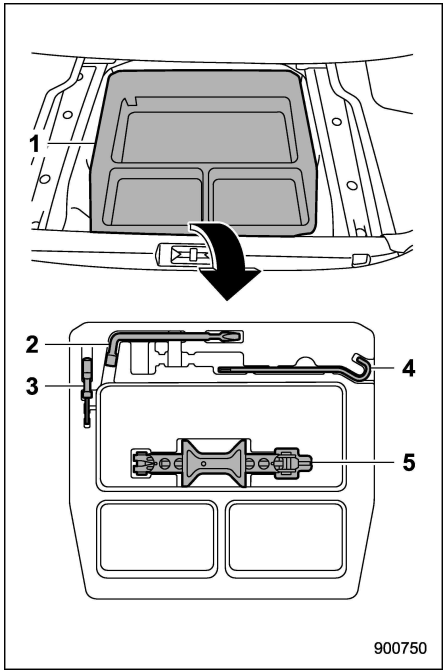

1) Under-floor storage compartment (Refer to “Under-floor storage compartment” ☞6-21.)
2) Wheel nut wrench
3) Screwdriver
4) Jack handle
5) Jack

The maintenance tools are stored in the under-floor storage compartment.

For the method to use the jack, refer to “Flat tires” ☞9-5.

■ Outback

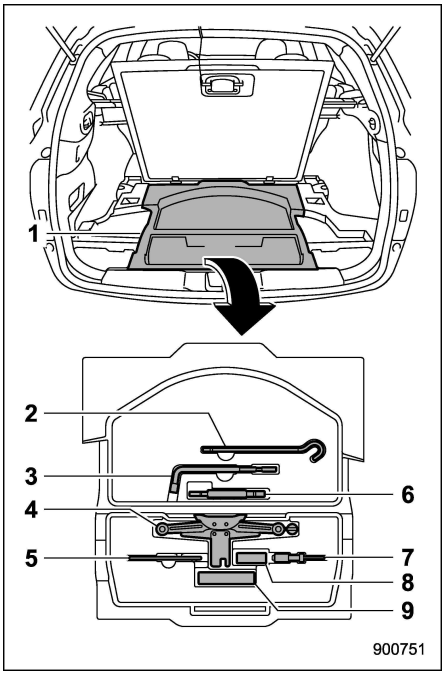

1) Under-floor storage compartment (Refer to “Under-floor storage compartment” ☞6-21.)
2) Jack handle
3) Wheel nut wrench
4) Jack
5) Torque wrench
6) Towing hook (eye bolt)
7) Screwdriver
8) Tire fixing band
9) Tire bag

The maintenance tools are stored in the under-floor storage compartment.

For the method to use the jack, refer to “Flat tires” ☞9-5.

Flat tires

If you have a flat tire while driving, never brake suddenly; keep driving straight ahead while gradually reducing speed. Then slowly pull off the road to a safe place.

■ Changing a flat tire

⚠ WARNING

- **Do not jack up the vehicle on an incline or a loose road surface. The jack can come out of the jacking point or sink into the ground and this can result in a serious accident.**
- **Use only the jack provided with your vehicle. The jack supplied with the vehicle is designed only for changing a tire. Never get under the vehicle while supporting the vehicle with this jack.**

– CONTINUED –

- **Always turn off the engine before raising the flat tire off the ground using the jack. Never swing or push the vehicle supported with the jack. The jack can come out of the jacking point due to a jolt and this can result in a serious accident.**

1. Park on a hard, level surface, whenever possible, then stop the engine.
2. Apply the parking brake and shift the select lever in the “P” (Park) position.
3. Turn on the hazard warning flasher and unload all occupants and luggage from the vehicle.

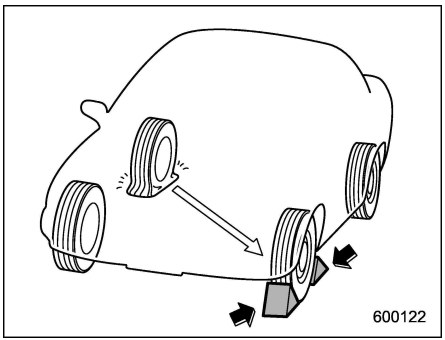

4. Put wheel blocks at the front and rear of the tire diagonally opposite the flat tire.
5. Take out the jack, jack handle and wheel nut wrench.

The tools and the spare tire are stored under the floor of the trunk (Legacy) or the cargo area (Outback). Refer to “Maintenance tools” ☞9-3.

NOTE

Make sure that the jack is well lubricated before using it.

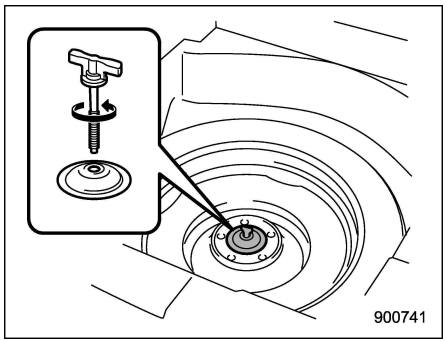

6. Take out the under-floor storage compartment and turn the attaching bolt counterclockwise, then take the spare tire out.

NOTE

Carefully read “Temporary spare tire” ☞9-2 and strictly follow the instructions.

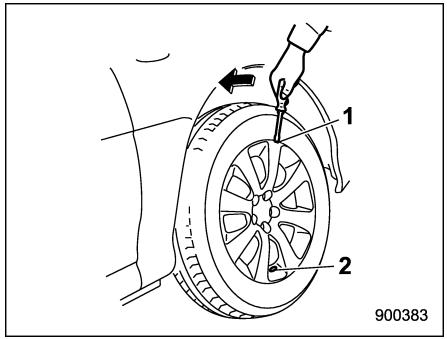

1) Notch
2) Valve hole

7. If your vehicle has wheel covers, insert a flat-head screwdriver into the notch on the opposite side of the valve hole and pry the wheel cover to remove it.

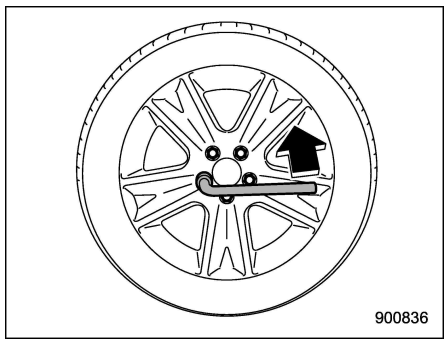

8. Loosen the wheel nuts using the wheel nut wrench but do not remove the nuts.

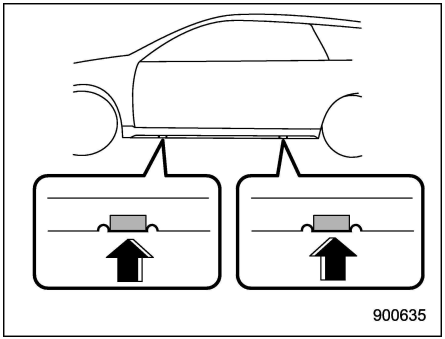

9. Place the jack under the side sill at the front or rear jack-up point closest to the flat tire.

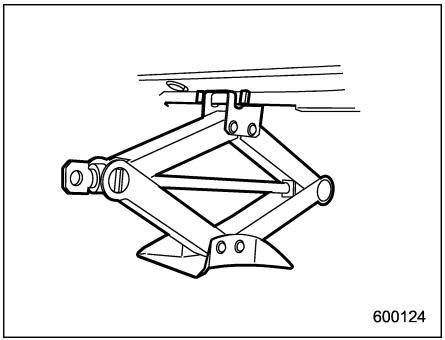

Turn the jackscrew by hand until the jack head engages firmly into the jack-up point.

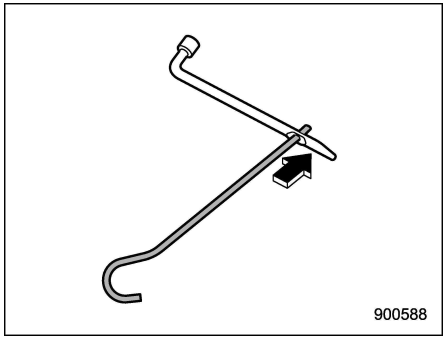

10. Insert the jack handle into the hole of the wheel nut wrench.

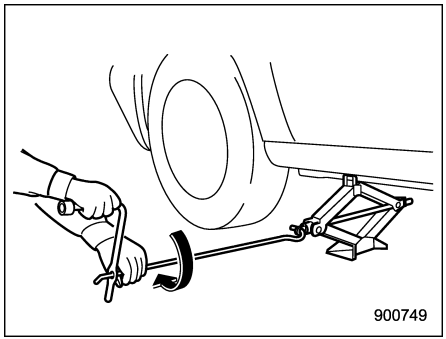

11. Insert the jack handle into the jack-screw, and turn the handle until the tire clears the ground. Do not raise the vehicle higher than necessary.

12. Remove the wheel nuts and the flat tire.

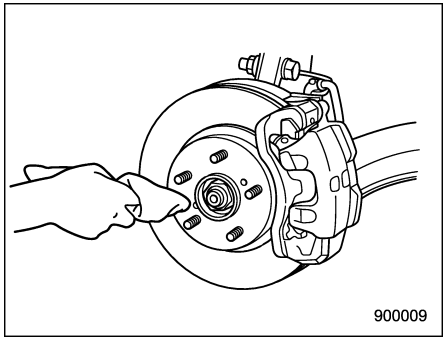

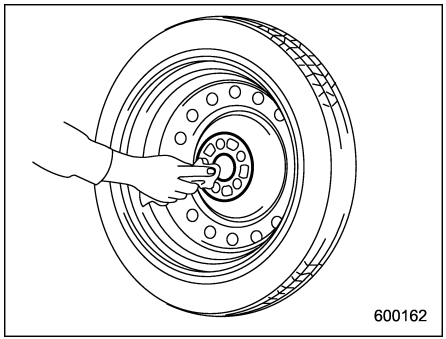

13. Before putting the spare tire on, clean the mounting surface of the wheel and hub with a cloth.

– CONTINUED –

14. Put on the spare tire. Replace the wheel nuts. Tighten them by hand.

⚠ WARNING

Do not use oil or grease on the wheel studs or nuts when the spare tire is installed. This could cause the nuts to become loose and lead to an accident.

15. Turn the jack handle counterclockwise to lower the vehicle.

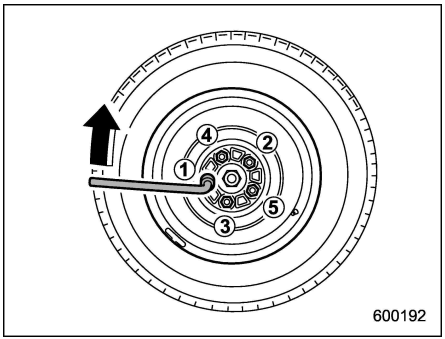

16. Use the wheel nut wrench to securely tighten the wheel nuts to the specified torque, following the tightening order in the illustration.

For the wheel nut tightening torque, refer to “Tires” ☞12-9. Never use your foot on the wheel nut wrench or a pipe extension on the wrench because you may exceed the specified torque. Have the wheel nut torque checked at the nearest automotive service facility.

17. Store the flat tire. For details, refer to “Storing a flat tire” ☞9-8. Also store the jack and jack handle in their storage locations.

⚠ WARNING

Never place a tire or tire changing tools in the passenger compartment after changing wheels. In a sudden stop or collision, loose equipment could strike occupants and cause injury. Store the tire and all tools in the proper place.

■ Storing a flat tire

▼ Storing in the spare tire compartment (Legacy)

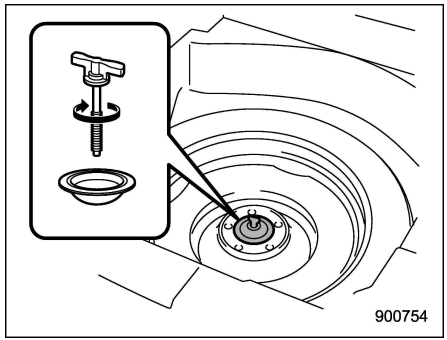

Store the flat tire in the spare tire compartment. Put the spacer and tighten the attaching bolt firmly.

▼ Storing with the tire bag (Outback)

1. If your vehicle has wheel covers, keep the wheel cover removed.
2. Take out the tire bag and tire fixing band from the under-floor storage compartment. For details, refer to “Outback” ☞9-5.

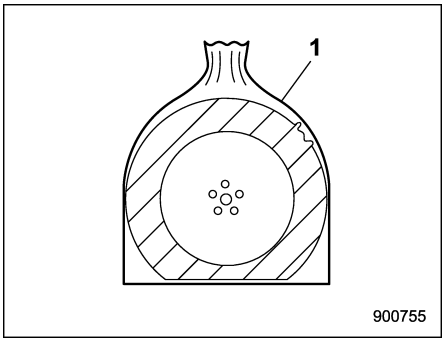

1) Tire bag

3. Place the flat tire in the tire bag.

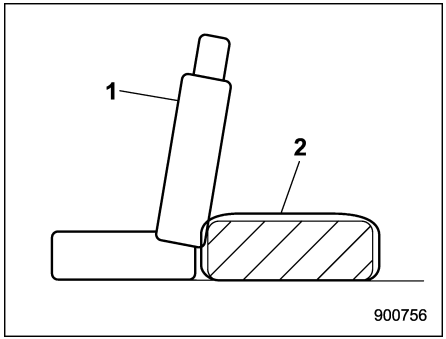

1) Rear seatback
2) Tire bag

4. Place the tire bag against the rear seatback.

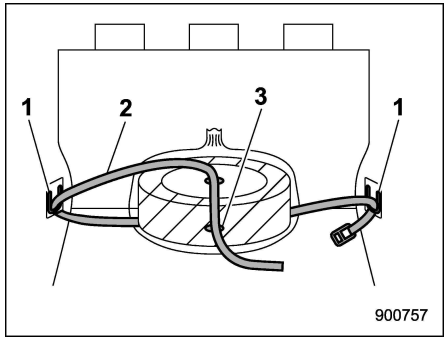

1) Convenient tie-down hook
2) Tire fixing band
3) Center of the wheels

5. Pass the tire fixing band through the center of the wheels and the convenient tie-down hooks.

– CONTINUED –

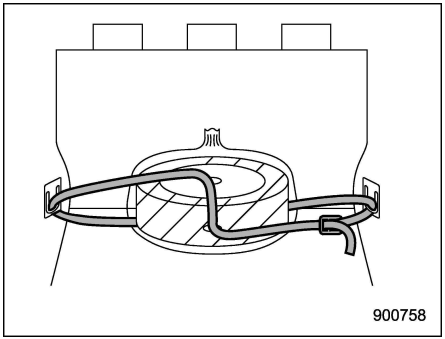

6. Fasten the tire fixing band to secure the tire bag.

■ Tire pressure monitoring system (TPMS) (if equipped)

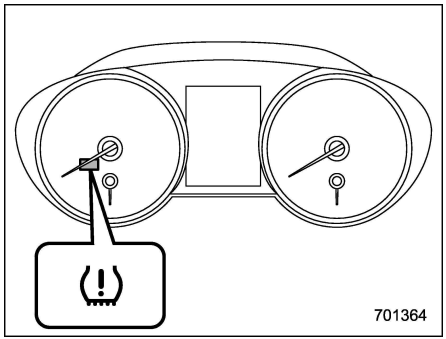

Low tire pressure warning light

The tire pressure monitoring system provides the driver with the warning message indicated by sending a signal from a sensor that is installed in each wheel when tire pressure is severely low.

The tire pressure monitoring system will activate only when the vehicle is driven. Also, this system may not react immediately to a sudden drop in tire pressure (for example, a blow-out caused running over a sharp object).

⚠ WARNING

- **If the low tire pressure warning light illuminates while driving, never brake suddenly. Instead, perform the following procedure. Otherwise an accident involving serious vehicle damage and serious personal injury could occur.**
  (1) Keep driving straight ahead while gradually reducing speed.
  (2) Slowly pull off the road to a safe place.
  (3) Check the pressure for all four tires and adjust the pressure to the COLD tire pressure shown on the vehicle placard on the door pillar on the driver's side.

  If this light still illuminates while driving after adjusting the tire pressure, a tire may have significant damage and a fast leak that causes the tire to lose air rapidly. If you have a flat tire, replace it with a spare tire as soon as possible.
- **When a spare tire is mounted or a wheel rim is replaced without the original pressure sensor/transmitter being transferred, the low tire pressure warning light will illuminate steadily after blinking for approximately one minute.**

This indicates the TPMS is unable to monitor all four road wheels. Contact your SUBARU dealer as soon as possible for tire and sensor replacement and/or system resetting.

- **When a tire is repaired with liquid sealant, the tire pressure warning valve and transmitter may not operate properly. If a liquid sealant is used, contact your nearest SUBARU dealer or other qualified service shop as soon as possible. Make sure to replace the tire pressure warning valve and transmitter when replacing the tire. You may reuse the wheel if there is no damage to it and if the sealant residue is properly cleaned off.**

  If the light illuminates steadily after blinking for approximately one minute, promptly contact a SUBARU dealer to have the system inspected.

■ TPMS screen

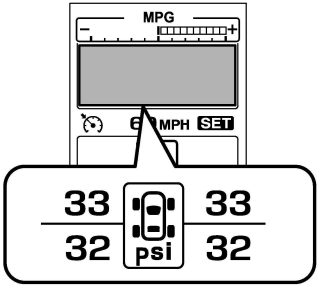

305321

This screen displays each tire pressure. Refer to “Basic screens” ☞3-36.

Jump starting

⚠ WARNING

- **Battery fluid is SULFURIC ACID. Do not let it come in contact with the eyes, skin, clothing or the vehicle.**

  If battery fluid gets on you, thoroughly flush the exposed area with water immediately. Get medical help if the fluid has entered your eyes.

  If battery fluid is accidentally swallowed, immediately drink a large amount of milk or water, and obtain immediate medical help.

  Keep everyone including children away from the battery.
- **The gas generated by a battery explodes if a flame or spark is brought near it. Do not smoke or light a match while jump starting.**
- **Never attempt jump starting if the discharged battery is frozen. It could cause the battery to burst or explode.**
- **Whenever working on or around a battery, always wear suitable eye**

– CONTINUED –

protectors, and remove metal objects such as rings, bands or other metal jewelry.

- **Be sure the jumper cables and clamps on them do not have loose or missing insulation.**
- **Do not jump start unless cables in suitable condition are available.**
- **A running engine can be dangerous. Keep your fingers, hands, clothing, hair and tools away from the cooling fan, belts and any other moving engine parts. Removing rings, watches and ties is advisable.**
- **Jump starting is dangerous if it is done incorrectly. If you are unsure about the proper procedure for jump starting, consult a competent mechanic.**

When your vehicle does not start due to a run down (discharged) battery, the vehicle may be jump started by connecting your battery to another battery (called the booster battery) with jumper cables.

■ How to jump start

1. Make sure the booster battery is 12 volts and the negative terminal is grounded.
2. If the booster battery is in another vehicle, do not let the two vehicles touch.
3. Turn off all unnecessary lights and accessories.
4. Connect the jumper cables exactly in the sequence illustrated.

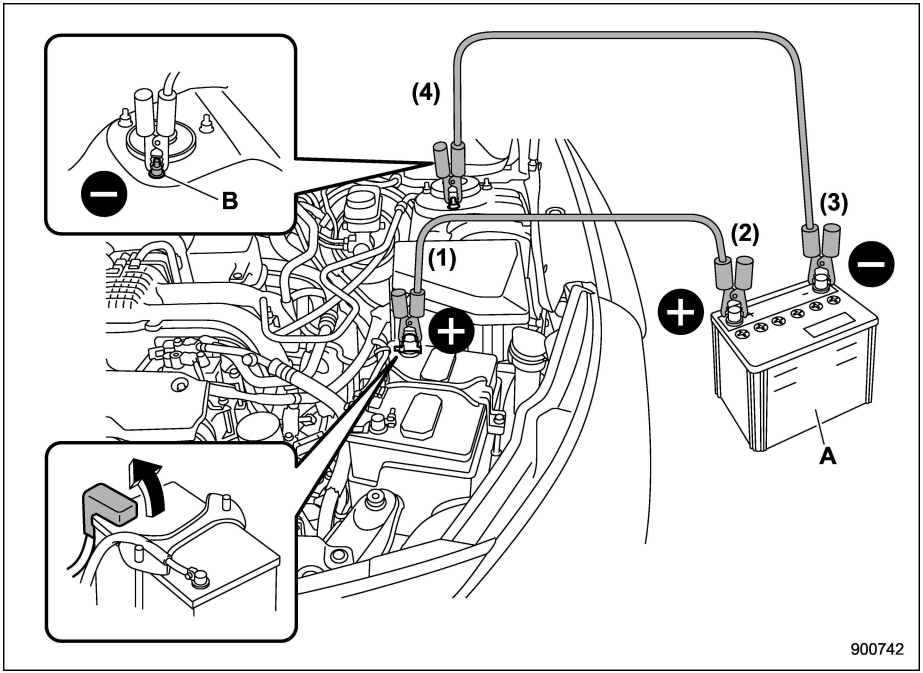

A) Booster battery
B) Strut mounting nut

1) Connect one jumper cable to the positive (+) terminal on the discharged battery.
2) Connect the other end of the jumper cable to the positive (+) terminal of the booster battery.
3) Connect one end of the other cable to the negative (−) terminal of the booster battery.
4) Connect the other end of the cable to the strut mounting nut.

Make sure that the cables are not near any moving parts and that the cable clamps are not in contact with any other metal.

5. Start the engine of the vehicle with the booster battery and run it at moderate speed. Then start the engine of the vehicle that has the discharged battery.

6. When finished, carefully disconnect the cables in exactly the reverse order.

Engine overheating

⚠ WARNING

Never attempt to remove the radiator cap until the engine has been shut off and has fully cooled down. When the engine is hot, the coolant is under pressure. Removing the cap while the engine is still hot could release a spray of boiling hot coolant, which could burn you very seriously.

If the engine overheats, pull off the road safely and stop the vehicle in a safe place.

■ If steam is coming from the engine compartment

Turn off the engine and get everyone away from the vehicle until it cools down.

■ If no steam is coming from the engine compartment

NOTE

For details about how to check the coolant level or how to add coolant, refer to "Engine coolant" ☞11-15.

1. Keep the engine running at idling speed.
2. Open the hood to ventilate the engine compartment. Refer to "Engine hood" ☞11-7.

Confirm that the cooling fan is turning. If the fan is not turning, immediately turn off the engine and contact your authorized dealer for repair.

3. After the engine coolant temperature has dropped, turn off the engine.

If the temperature gauge stays in the overheated zone, turn off the engine.

4. After the engine has fully cooled down, check the coolant level in the reserve tank.

If the coolant level is below the "LOW" mark, add coolant up to the "FULL" mark.

5. If there is no coolant in the reserve tank, add coolant to the reserve tank. Then remove the radiator cap and fill the radiator with coolant.

If you remove the radiator cap from a hot radiator, first wrap a thick cloth around the radiator cap, then turn the cap counterclockwise slowly without pressing down until it stops. Release the pressure from the radiator. After the pressure has been fully released, remove the cap by pressing down and turning it.

Towing

⚠ WARNING

Never tow AWD vehicles with the front wheels raised off the ground while the rear wheels are on the ground, or with the rear wheels raised off the ground while the front wheels are on the ground. This will cause the vehicle to spin away due to the operation or deterioration of the center differential.

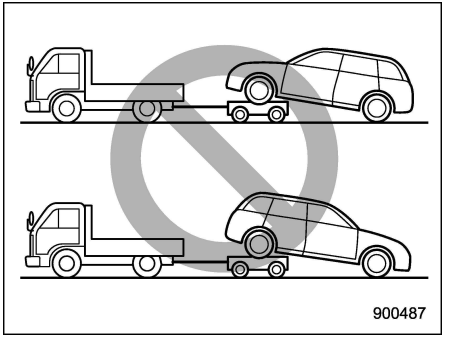

If towing is necessary, SUBARU recommends it be done by your SUBARU dealer or a commercial towing service.

■ Towing hook and tie-down hooks/holes

The towing hooks should be used only in an emergency.

A towing hook is supplied with Outback only. Legacy is not supplied with a towing hook (it is available as an accessory). On Legacy, the towing access cover is on the rear bumper only.

SUBARU recommends towing be done by your SUBARU dealer or a commercial towing service.

⚠ CAUTION

- **Use only the specified towing hook and tie-down hooks/holes. Never use suspension parts or other parts of the body for towing or tie-down purposes.**
- **Never use the tie-down hole closest to the muffler under the vehicle for towing purposes.**

Front towing hook (Outback):

1. Take out the screwdriver, towing hook, wheel nut wrench and jack handle from the under-floor storage compartment.

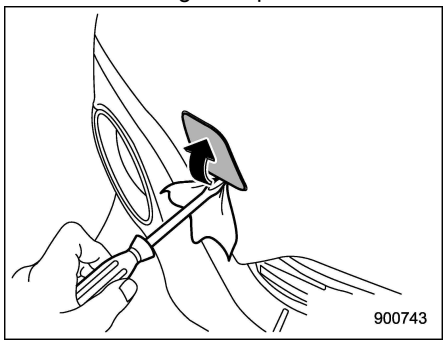

2. Pry off the towing access cover on the front bumper using a screwdriver, and you will find a threaded hole for attaching the towing hook.

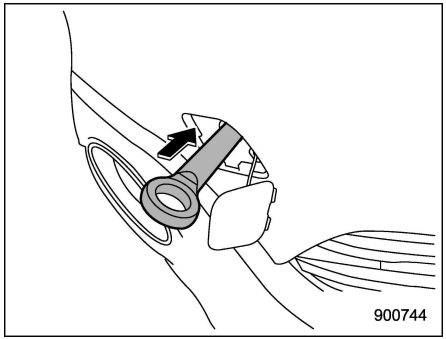

3. Screw the towing hook into the threaded hole until the threads can no longer be seen.

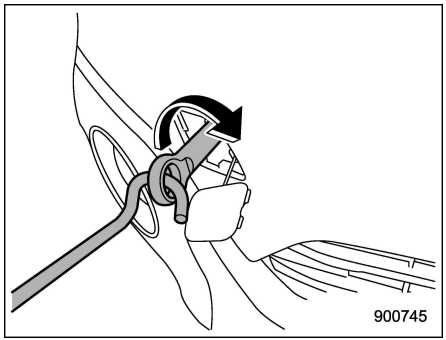

4. Tighten the towing hook securely using the jack handle and wheel nut wrench.

– CONTINUED –

After towing, remove the towing hook from the vehicle and stow it in the under-floor storage compartment.
Fit the towing hook cover on the bumper.

WARNING

- **Do not use the towing hook for purposes other than towing your vehicle.**
- **Be sure to remove the towing hook after towing. Leaving the towing hook mounted on the vehicle could interfere with proper operation of the SRS airbag system in a frontal collision.**

CAUTION

To prevent deformation to the bumper and the towing hook, do not apply excessive load to the towing hook.

Rear towing hook (Outback):

1. Take out the screwdriver, towing hook, wheel nut wrench and jack handle from the under-floor storage compartment.

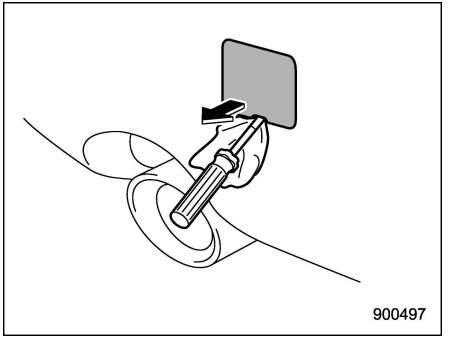

2. Pry off the cover on the rear bumper using a screwdriver, and you will find a threaded hole for attaching the towing hook.

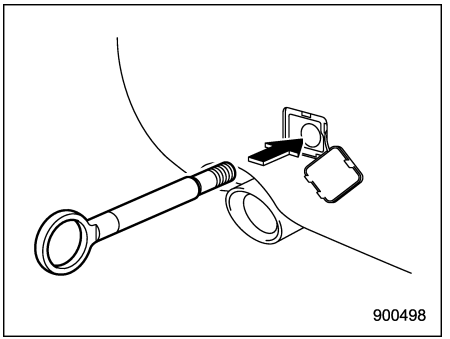

3. Screw the towing hook into the threaded hole until its thread can no longer be seen.

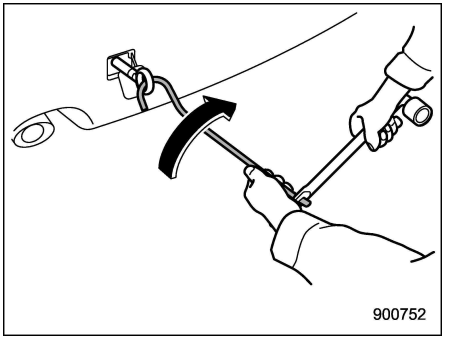

4. Tighten the towing hook securely using the jack handle and wheel nut wrench.

After towing, remove the towing hook from the vehicle and stow it in the under-floor storage compartment.
Fit the towing hook cover on the bumper.

WARNING

- **Do not use the towing hook for purposes other than towing.**
- **Be sure to remove the towing hook after towing. Leaving the towing hook mounted on the vehicle could interfere with proper operation of the fuel pump shut off function when the vehi-**

cle is struck from behind.

⚠ CAUTION

To prevent deformation to the bumper and the towing hook, do not apply an excessive load to the towing hook.

Front tie-down hooks:

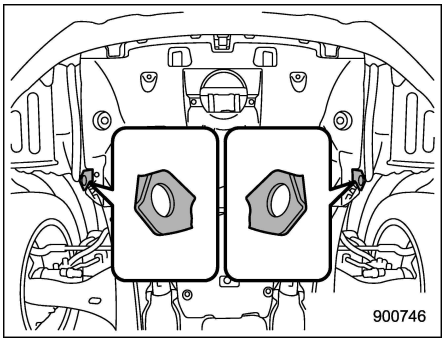

The front tie-down hooks are located between each of the front tires and the front bumper.

Front Tie-down Hooks are for tying down the vehicle. They are not for towing.

Rear tie-down holes:

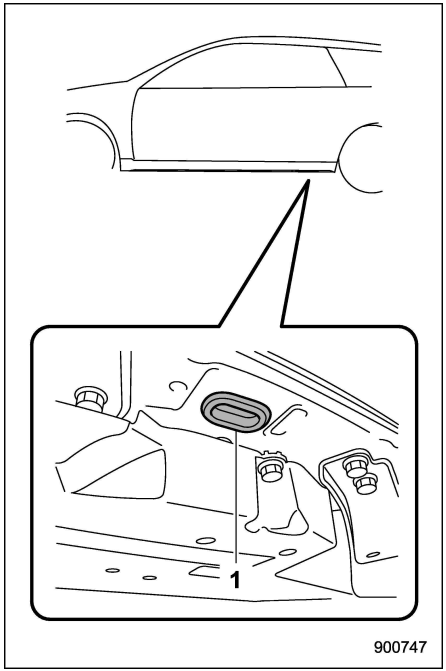

1) Rear tie-down hole

The rear tie-down holes are located near each of the jack-up reinforcements.

There is a plug in each rear tie-down hole. To use the rear tie-down holes, remove the plugs. After using the rear tie-down holes, return the plugs to their original places.

⚠ WARNING

Use the rear tie-down holes only for downward anchoring. If they are used to anchor the vehicle in any other direction, cables may slip out of the holes, possibly causing a dangerous situation.

■ Using a flat-bed truck

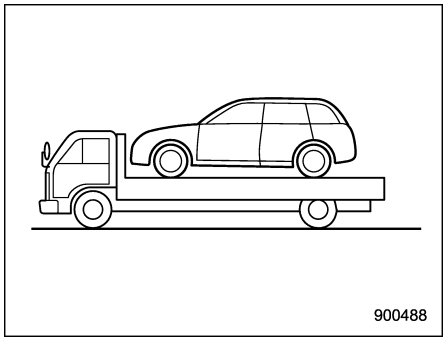

This is the best way to transport your vehicle. Use the following procedures to ensure safe transportation.

1. Shift the select lever into the “P” position.
2. Apply the parking brake firmly.

– CONTINUED –

3. Secure the vehicle onto the carrier properly with safety chains. Each safety chain should be equally tightened and care must be taken not to pull the chains so tightly that the suspension bottoms out.

■ Towing with all wheels on the ground

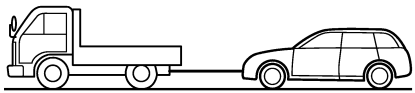

900489

⚠ WARNING

- **Never turn the ignition switch to the "LOCK"/"OFF" position while the vehicle is being towed because the steering wheel and the direction of the wheels will be locked.**
- **Remember that the brake booster and power steering do not function when the engine is not running. Because the engine is turned off, it will take greater effort to operate the brake pedal and steering wheel.**

⚠ CAUTION

- **If transmission failure occurs, transport your vehicle on a flat-bed truck.**
- **The traveling speed must be limited to less than 20 mph (30 km/h) and the traveling distance to less than 31 miles (50 km). For greater speeds and distances, transport your vehicle on a flat-bed truck.**

1. Release the parking brake and put the transmission in neutral.
2. The ignition switch should be in the "ON" position while the vehicle is being towed.
3. Take up slack in the towline slowly to prevent damage to the vehicle.

Electronic parking brake – if the electronic parking brake cannot be released

Contact your SUBARU dealer and have your SUBARU dealer release the electronic parking brake.

Access key fob – if access key fob does not operate properly

⚠ CAUTION

Keep metallic objects, magnetic sources and signal transmitters away from the area between the access key fob and the push-button ignition switch. They may interfere with the communication between the access key fob and the push-button ignition switch.

The following functions may be inoperable because of strong radio signals in the surrounding area or a low battery condition of the access key fob.

- Locking/unlocking doors including rear gate
- Switching power status
- Starting engine

In such cases, perform the following procedure. When the battery of the access key fob is discharged, replace it with a new one. Refer to "Replacing battery of access key fob" ☞11-48.

■ Locking and unlocking

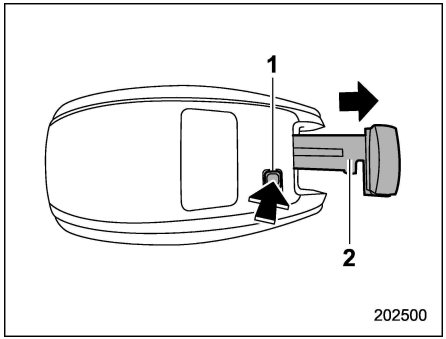

1) Release button
2) Emergency key

While pressing the release button of the access key fob, take out the emergency key.

Lock or unlock the driver's door with the emergency key in the procedure described in "Locking and unlocking from the outside" ☞2-6.

NOTE

After locking or unlocking, be sure to attach the emergency key back to the access key fob.

■ Switching power status

1. Apply the parking brake.
2. Shift the select lever into the "P" position.
3. Depress the brake pedal.

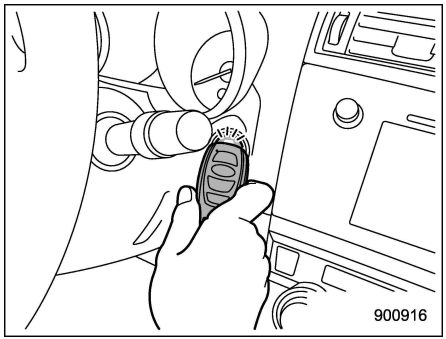

4. Hold the access key fob with the buttons facing you, and touch the push-button ignition switch with it.

When the communication between the access key fob and the vehicle is completed, a chime (ding) will sound. At the same time, the status of the push-button ignition switch changes to either of the following.

- When the keyless access with push-button start system is deactivated: "ACC"
- Under other conditions: "ON"

– CONTINUED –

5. When the keyless access with push-button start system is deactivated, press the push-button ignition switch with the brake pedal released. The status of the push-button ignition switch then changes to “ON”.

NOTE

If the power does not switch even though the above procedure was followed precisely, contact your SUBARU dealer.

■ Starting engine

1. Apply the parking brake.
2. Shift the select lever into the “P” position.
3. Depress the brake pedal.

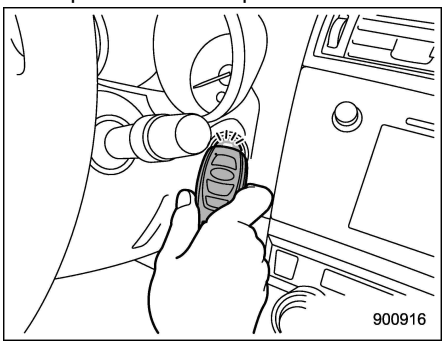

4. Hold the access key fob with the buttons facing you, and touch the push-button ignition switch with it.

When the communication between the access key fob and the vehicle is completed, a chime (ding) will sound. At the same time, the push-button ignition switch turns to the “ACC” or “ON” position.

5. After the push-button ignition switch turns to the “ACC” or “ON” position, while depressing the brake pedal, press the push-button ignition switch.

NOTE

If the engine does not start even though the above procedure was followed precisely, contact your SUBARU dealer.

Trunk lid (Legacy) – if the trunk lid cannot be opened

NOTE

If you open the trunk lid with a key while the alarm system is armed, the alarm system is triggered and the vehicle’s horn sounds. In this case, perform any of the following operations.

- **Press any button on the remote transmitter.**
- **Insert the key into the ignition switch and turn the ignition switch to the “ON” position.**

For details about the alarm system, refer to “Alarm system” ☞2-29.

The trunk lid can also be opened using the key.

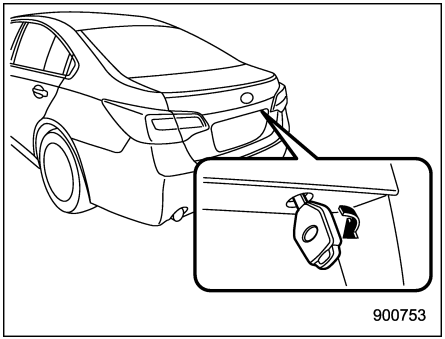

To open the trunk lid, insert the key into the key cylinder and turn it clockwise.

NOTE

For models with "keyless access with push-button start system":

The emergency key is directional. If the key cannot be inserted, change the direction that the grooved side is facing and insert it again.

Rear gate (Outback) – if the rear gate cannot be opened

In the event that you cannot open the rear gate by pressing the rear gate opener button (all models) or using the power rear gate (if equipped), you can open it from inside the cargo area.

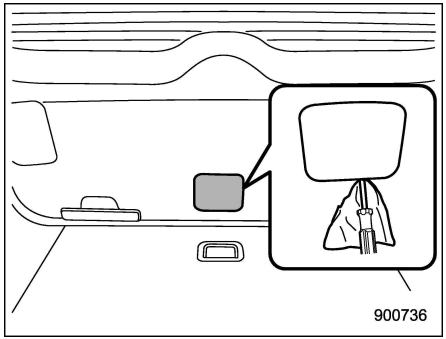

1. Remove the access cover at the bottom-center of the rear gate trim using flat-head screwdriver.
2. Locate the rear gate lock release lever behind the rear gate trim panel.

⚠ CAUTION

Never operate the rear gate lock release lever with your fingers because doing so may cause an injury.

Always use a flat-head screwdriver or a similar tool.

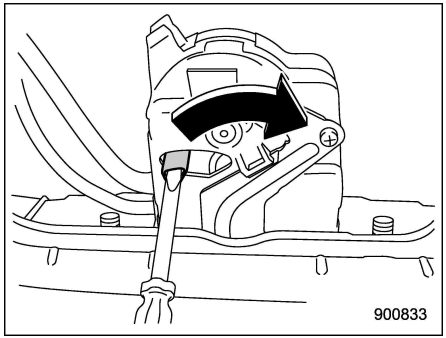

Models without power rear gate

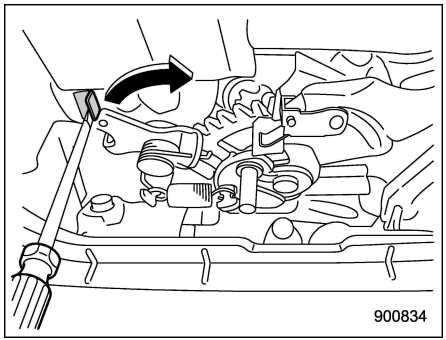

Models with power rear gate

3. Turn the lever to the right position using

– CONTINUED –

a flat-head screwdriver or a similar tool. Then the rear gate will open.

Power rear gate – if power rear gate does not operate properly

■ When the power rear gate is deactivated

⚠ CAUTION

When operating the power rear gate manually, do not use excessive force. Doing so may cause a malfunction.

NOTE

While the power rear gate is temporarily deactivated, if it is struck by body parts or objects and sustains a strong impact, the temporary deactivation may be canceled. The purpose of this is to absorb the impact of the collision and it is not a malfunction. In this case, the rear gate will not open or close automatically.

If the power rear gate senses a malfunction, an electronic chirp will sound and the rear gate will stop opening or closing.

In order for the rear gate to open and close automatically, carry out the following operation. If the rear gate does not open and close automatically after carrying out this operation, we recommend that you have the vehicle checked at a SUBARU dealer.

▼ When the rear gate is closed

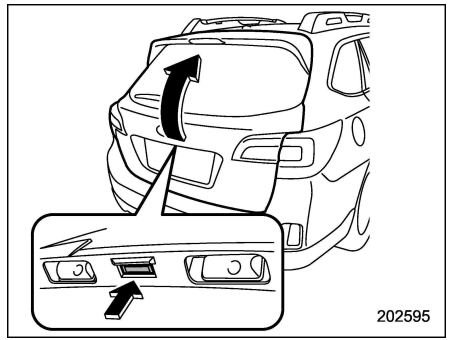

1. Press and hold the rear gate opener button. If the rear gate does not open, perform the procedure described in “Rear gate (Outback) – if the rear gate cannot be opened” ☞9-21.
2. Gently close the rear gate by hand until it reaches the half-shut position.
3. Operate the power rear gate to confirm it is recovered.

▼ **When the rear gate is stuck at the fully open position or does not fully close**

If the rear gate cannot be closed due to a dead battery, etc., while the rear gate is stopped midway, it can be closed by hand.

1. Gently close the rear gate by hand until it reaches the half-shut position.
2. Operate the power rear gate to confirm it is recovered.

■ When the rear gate cannot be opened

Perform the procedure described in "Rear gate (Outback) – if the rear gate cannot be opened" ☞9-21.

■ When the rear gate cannot be closed

⚠ CAUTION

- **On areas which are not flat, such as hills, do not conduct any of the following actions. The rear gate may close suddenly and hit someone's head, face or catch fingers and body parts in it, resulting in injury.**
- **Even while conducting the following actions on a flat surface, be careful not to be injured by getting caught in or hit by the rear gate.**
- **When operating the power rear gate manually, do not use excessive force. Doing so may cause a malfunction.**
- **After closing the rear gate by the following methods, we recommend that you have the vehicle checked at a SUBARU dealer.**

If the rear gate cannot be closed due to a dead battery, etc., while the rear gate is stopped midway, it can be closed by hand.

1. Gently close the rear gate by hand until it reaches the half-shut position.
2. Operate the power rear gate to confirm it is recovered.

If your vehicle is involved in an accident

■ To restart the engine when involved in an accident

⚠ CAUTION

If your vehicle is involved in an accident, be sure to inspect the ground under the vehicle before restarting the engine. If you find that fuel has leaked on the ground, do not try to restart the engine. The fuel system has been damaged and is in need of repair. Immediately contact the nearest automotive service facility. We recommend that you consult your SUBARU dealer.

Your vehicle has a fuel pump shut off system. When the vehicle sustains an impact in an accident, etc., the fuel pump shut off system stops supplying the fuel in order to minimize fuel leakage.

Perform the following procedures to restart the engine after the system is activated.

Models without "keyless access with push-button start system":

1. Turn the ignition switch to the "LOCK" or "ACC" position.
2. Restart the engine.

– CONTINUED –

Models with “keyless access with push-button start system”:

1. Turn the push-button ignition switch to the “ACC” or “OFF” position.
2. Restart the engine.

■ Auto lock/unlock operation when involved in an accident

When the auto lock/unlock function is ON, all the doors will be locked automatically while driving. For further details, refer to “Automatic door locking/unlocking” ☞2-8.

When the vehicle sustains a strong impact which may trigger the airbags to deploy, the door locks may be unlocked automatically to enable emergency escape. Generally, an impact sustained from a rear end collision does not trigger the airbags to deploy. However if the impact is strong enough to deploy the airbags, it can also trigger the unlocking function.

Under such circumstance, the auto unlock/lock function will be suspended and the doors will remain unlocked.

Confirm the safety of the surroundings first and carry out the following to retrieve the auto door lock function.

Models without “keyless access with push-button start system”:

1. Turn the ignition switch to the “LOCK” position.
2. Turn the ignition switch to the “ON” position.

Models with “keyless access with push-button start system”:

1. Turn the push-button ignition switch to the “OFF” position.
2. Turn the push-button ignition switch to the “ON” position.

NOTE

Depending on the severity of the impact, the emergency unlocking may not function.

⚠ CAUTION

If the following occur, there may be a malfunction in the system.

Have the system inspected by a SUBARU dealer.

- **The doors unlock automatically while driving.**
- **With all doors shut, the doors unlock when pressing the lock side of the power door locking switch.**
- **The auto door lock function does not operate.**

Exterior care 10-2
Washing 10-2
Waxing and polishing 10-3
Cleaning alloy wheels 10-3
Corrosion protection 10-4
Most common causes of corrosion 10-4
To help prevent corrosion 10-4
Cleaning the interior 10-5
Seat fabric 10-5
Leather seat materials 10-5
Synthetic leather upholstery 10-6
Climate control panel, audio panel, instrument panel, console panel, switches, combination meter, and other plastic surface 10-6
Monitor (if equipped) 10-6

Exterior care

■ Washing

⚠ CAUTION

- **When washing the vehicle, the brakes may get wet. As a result, the brake stopping distance will be longer. To dry the brakes, drive the vehicle at a safe speed while lightly pressing the brake pedal to heat up the brakes.**
- **Do not wash the engine compartment and areas adjacent to it. If water enters the engine air intake or electrical parts, it will cause engine trouble or a malfunction of the power steering.**
- **When washing inner fenders, underbody, bumpers and protruding objects such as exhaust pipes and exhaust finishers, be careful to prevent injuries from contacting sharp ends.**
- **Do not use any organic solvents when washing the surface of the bulb assembly cover. However, if a detergent with organic solvents is used to wash the cover surface, completely rinse off the detergent with water. Otherwise, the cover surface may be damaged.**
- **Outback: Since your vehicle is equipped with a rear wiper, automatic car-wash brushes could become tangled around it, damaging the wiper arm and other components. Ask the automatic car-wash operator not to let the brushes touch the wiper arm or to fix the wiper arm on the rear window glass with adhesive tape before operating the machine.**

NOTE

When having your vehicle washed in an automatic car wash, make sure beforehand that the car wash is of suitable type.

The best way to preserve your vehicle's beauty is frequent washing. Wash the vehicle at least once a month to avoid contamination by road grime.

Wash dirt off with a wet sponge and plenty of lukewarm or cold water. Do not wash the vehicle with hot water and in direct sunlight.

Salt, chemicals, insects, tar, soot, tree sap, and bird droppings should be washed off by using a light detergent, as required. If you use a light detergent, make certain that it is a neutral detergent. Do not use strong soap or chemical detergents. All cleaning agents should be promptly flushed from the surface and not allowed to dry there. Rinse the vehicle thoroughly with plenty of lukewarm water. Wipe the remaining water off with a chamois or soft cloth. Wear rubber gloves and use a hand brush when washing down underbody, inner fenders and suspension to effectively remove mud and dirt off.

▼ Washing the underbody

Chemicals, salts and gravel used for deicing road surfaces are extremely corrosive, accelerating the corrosion of underbody components, such as the exhaust system, fuel and brake lines, brake cables, floor pan and fenders, and suspension.

Thoroughly flush the underbody and inside of the fenders with lukewarm or cold water at frequent intervals to reduce the harmful effects of such agents.

Mud and sand adhering to the underbody components may accelerate their corrosion.

After driving off-road or on muddy or sandy roads, wash the mud and sand off the underbody.

Carefully flush the suspension and axle parts, as they are particularly prone to mud

and sand buildup. Do not use a sharp-edged tool to remove caked mud.

⚠ CAUTION

- **Be careful not to damage brake hoses, sensor harnesses, and other parts when washing suspension components.**
- **Be careful not to flush the engine bottom for a long time. It may cause damage of some electrical parts.**

▼ Using a warm water washer

- Keep a good distance of 12 in (30 cm) or more between the washer nozzle and the vehicle.
- Do not wash the same area continuously.
- If a stain will not come out easily, wash by hand. Some warm water washers are of the high temperature, high pressure type, and they can damage or deform the resin parts such as mouldings, or cause water to leak into the vehicle.

■ Waxing and polishing

Always wash and dry the vehicle before waxing and polishing.

Use a good quality polish and wax and apply them according to the manufacturer's instructions. Wax or polish when the painted surface is cool.

Be sure to polish and wax the chrome trim, as well as the painted surfaces. Loss of wax on a painted surface leads to loss of the original luster and also quickens the deterioration of the surface. It is recommended that a coat of wax be applied at least once a month, or whenever the surface no longer repels water.

If the appearance of the paint has diminished to the point where the luster or tone cannot be restored, lightly polish the surface with a fine-grained compound. Never polish just the affected area, but include the surrounding area as well. Always polish in only one direction. A No. 2000 grain compound is recommended. Never use a coarse-grained compound. Coarser grained compounds have a smaller grain-size number and could damage the paint. After polishing with a compound, coat with wax to restore the original luster. Frequent polishing with a compound or an incorrect polishing technique will result in removing the paint layer and exposing the undercoat. When in doubt, it is always best to contact your SUBARU dealer or an auto paint specialist.

⚠ CAUTION

Do not use any agents with organic solvents on the surface of the bulb assembly cover. However, if a polish or wax with organic solvents is applied to the cover surface, completely wipe off the polish or wax. Otherwise, the cover surface may be damaged.

NOTE

Be careful not to block the windshield washer nozzles with wax when waxing the vehicle.

■ Cleaning alloy wheels

- Promptly wipe the alloy wheels clean of any kind of grime or agent. If dirt is left on too long, it may be difficult to clean off.
- Do not use soap containing grit to clean the wheels. Be sure to use a neutral cleaning agent, and later rinse thoroughly with water. Do not clean the wheels with a stiff brush or expose them to a high-speed washing device.
- Clean the vehicle (including the alloy

– CONTINUED –

wheels) with water as soon as possible when it has been splashed with sea water, exposed to sea breezes, or driven on roads treated with salt or other agents.

Corrosion protection

Your SUBARU has been designed and built to resist corrosion. Special materials and protective finishes have been used on most parts of the vehicle to help maintain fine appearance, strength, and reliable operation.

■ Most common causes of corrosion

The most common causes of corrosion are:

- The accumulation of moisture retaining dirt and debris in body panel sections, cavities, and other areas.
- Damage to paint and other protective coatings caused by gravel and stone chips or minor accidents.

Corrosion is accelerated on the vehicle when:

- It is exposed to road salt or dust control chemicals, or used in coastal areas where there is more salt in the air, or in areas where there is considerable industrial pollution.
- It is driven in areas of high humidity, especially when temperatures range just above freezing.
- Dampness in certain parts of the vehicle remains for a long time, even though other parts of the vehicle may be dry.
- High temperatures will cause corrosion to parts of the vehicle which cannot dry quickly due to lack of proper ventilation.

■ To help prevent corrosion

Wash the vehicle regularly to prevent corrosion of the body and suspension components. Also, wash the vehicle promptly after driving on any of the following surfaces.

- roads that have been salted to prevent them from freezing in winter
- mud, sand, or gravel
- coastal roads

After the winter has ended, it is recommended that the underbody be given a very thorough washing.

Before the beginning of winter, check the condition of underbody components, such as the exhaust system, fuel and brake lines, brake cables, suspension, steering system, floor pan, and fenders. If any of them are found to be rusted, they should be given an appropriate rust prevention treatment or should be replaced. Contact your SUBARU dealer to perform this kind of maintenance and treatment if you need

assistance.

Repair chips and scratches in the paint as soon as you find them.

Check the interior of the vehicle for water and dirt accumulation under the floor mats because that could cause corrosion. Occasionally check under the mats to make sure the area is dry.

Keep your garage dry. Do not park your vehicle in a damp, poorly ventilated garage. In such a garage, corrosion can be caused by dampness. If you wash the vehicle in the garage or put the vehicle into the garage when wet or covered with snow, that can cause dampness.

If your vehicle is operated in cold weather and/or in areas where road salts and other corrosive materials are used, the door hinges and locks, trunk lid lock, and hood latch should be inspected and lubricated periodically.

Cleaning the interior

Use a soft, damp cloth to clean the climate control panel, audio equipment, instrument panel, center console, combination meter panel, and switches. (Do not use organic solvents.)

■ Seat fabric

Remove loose dirt, dust or debris with a vacuum cleaner. If the dirt is caked on the fabric or hard to remove with a vacuum cleaner, use a soft brush then vacuum it.

Wipe the fabric surface with a tightly wrung cloth and dry the seat fabric thoroughly. If the fabric is still dirty, wipe using a solution of mild soap and lukewarm water then dry thoroughly.

If the stain does not come out, try a commercially available fabric cleaner. Use the cleaner on a hidden place and make sure it does not affect the fabric adversely. Use the cleaner according to its instructions.

⚠ CAUTION

When cleaning the seat, do not use benzine, paint thinner, or any similar materials. Doing so could damage the surface and cause the color to deteriorate.

■ Leather seat materials

The leather used by SUBARU is a high quality natural product which will retain its distinctive appearance and feel for many years with proper care.

Allowing dust or road dirt to build up on the surface can cause the material to become brittle and to wear prematurely. Regular cleaning with a soft, moist, natural fiber cloth should be performed monthly, taking care not to soak the leather or allow water to penetrate the stitched seams.

A mild detergent suitable for cleaning woolen fabrics may be used to remove difficult dirt spots, rubbing with a soft, dry cloth afterwards to restore the luster. If your SUBARU is to be parked for a long time in bright sunlight, it is recommended that the seats and headrests be covered, or the windows shaded, to prevent fading or shrinkage.

Minor surface blemishes or bald patches may be treated with a commercial leather

– CONTINUED –

spray lacquer. You will discover that each leather seat section will develop soft folds or wrinkles, which is characteristic of genuine leather.

■ Synthetic leather upholstery

The synthetic leather material used on the SUBARU may be cleaned using mild soap or detergent and water, after first vacuuming or brushing away loose dirt. Allow the soap to soak in for a few minutes and wipe off with a clean, damp cloth. Commercial foam-type cleaners suitable for synthetic leather materials may be used when necessary.

⚠ CAUTION

Strong cleaning agents such as solvents, paint thinners, window cleaner or gasoline must never be used on leather or synthetic interior materials. Doing so could damage the surface and cause the color to deteriorate.

■ Climate control panel, audio panel, instrument panel, console panel, switches, combination meter, and other plastic surface

Use a soft, damp cloth to clean the climate control panel, audio equipment, instrument panel, center console, combination meter panel, and switches.

⚠ CAUTION

- **Do not use organic solvents such as paint thinners or gasoline, or strong cleaning agents that contain those solvents. Doing so could damage the surface and cause the color to deteriorate.**
- **Do not use chemical solvents that contain silicone on the vehicle audio system, electrical components of the air-conditioner or any switches. If silicone adheres to these parts, it may cause damage to electrical components.**

■ Monitor (if equipped)

To clean the audio/navigation monitor, wipe it with a silicone cloth or with a soft cloth. If the monitor is extremely dirty, clean it with a soft cloth moistened with neutral detergent then carefully wipe off any remaining detergent.

⚠ CAUTION

- **Do not spray neutral detergent directly onto the monitor. Doing so could damage the monitor's components.**
- **Do not wipe the monitor with a hard cloth. Doing so could scratch the monitor.**
- **Do not use cleaning fluid that contains thinner, gasoline, or any other volatile substance. Such cleaning fluid could erase the lettering on the switches at the bottom of the monitor.**

Maintenance schedule 11-3
Maintenance precautions 11-3
Before checking or servicing in the engine compartment 11-4
When checking or servicing in the engine compartment (2.5 L models) 11-5
When checking or servicing in the engine compartment while the engine is running 11-5
Maintenance tips 11-5
Removing and reinstalling clips 11-5
Engine hood 11-7
Engine compartment overview 11-9
2.5 L models 11-9
3.6 L models 11-10
Engine oil 11-11
Engine oil consumption 11-11
Checking the oil level 11-11
Changing the oil and oil filter 11-13
Recommended grade and viscosity 11-13
Synthetic oil 11-13
Cooling system 11-14
Cooling fan, hose and connections 11-14
Engine coolant 11-15
Air cleaner element 11-15
Replacing the air cleaner element 11-16
Spark plugs 11-18
Recommended spark plugs 11-18
Drive belts 11-18
Continuously variable transmission fluid 11-19
Front differential gear oil and rear differential gear oil 11-19
Recommended grade and viscosity 11-19
Brake fluid 11-19
Checking the fluid level 11-19
Recommended brake fluid 11-20
Brake booster 11-21
Brake pedal 11-21
Checking the brake pedal free play 11-21
Checking the brake pedal reserve distance 11-21
Replacement of brake pad 11-22
Breaking-in of new brake pads 11-22
Tires and wheels 11-22
Types of tires 11-22
Tire pressure monitoring system (TPMS) (if equipped) 11-23
Tire inspection 11-24
Tire pressures and wear 11-25
Wheel balance 11-26
Wear indicators 11-27
Rotational direction of tires 11-27
Tire rotation 11-27
Tire replacement 11-28
Wheel replacement 11-29
Alloy wheels 11-29
Windshield washer fluid 11-30
Replacement of wiper blades 11-31
Windshield wiper blade assembly 11-32
Windshield wiper blade rubber 11-32
Rear window wiper blade assembly (Outback) 11-33

Rear window wiper blade rubber (Outback) 11-34
Battery 11-35
Fuses 11-36
Installation of accessories 11-38
Replacing bulbs 11-38
Headlights (models with LED headlights) 11-38
Headlights (models with halogen headlights)..... 11-38
Front turn signal light 11-40
Front fog light (Outback - if equipped)..... 11-40
Rear combination lights 11-41
Backup light 11-43
License plate light 11-44
Dome light..... 11-45
Map light 11-46
Door step light 11-46
Cargo area light (Outback)..... 11-46
Trunk light (Legacy)..... 11-46
Other bulbs 11-47
Replacing battery 11-47
Replacing battery of access key fob 11-48
Replacing battery of transmitter..... 11-49

Maintenance schedule

U.S. models

The scheduled maintenance items required to be serviced at regular intervals are shown in the “Warranty and Maintenance Booklet”. For details, read the separate “Warranty and Maintenance Booklet”.

Canada models

The scheduled maintenance items required to be serviced at regular intervals are shown in the “Warranty and Service Booklet”. For details, read the separate “Warranty and Service Booklet”.

Except for U.S. and Canada models

Some items of your vehicle are required to be serviced at scheduled intervals. For details about your maintenance schedule, read the separate “Warranty and Maintenance Booklet”.

Maintenance precautions

When maintenance and service are required, it is recommended that all work be done by an authorized SUBARU dealer.

If you perform maintenance and service by yourself, you should familiarize yourself with the information provided in this section on general maintenance and service for your SUBARU.

Incorrect or incomplete service could cause improper or unsafe vehicle operation. Any problems caused by improper maintenance and service performed by you are not eligible for warranty coverage.

WARNING

- **Testing of an All-Wheel Drive vehicle must NEVER be performed on a single two-wheel dynamometer or similar apparatus. Attempting to do so will result in transmission damage and in uncontrolled vehicle movement and may cause an accident or injuries to persons nearby.**
- **Always select a safe area when performing maintenance on your vehicle.**
- **Always be very careful to avoid injury when working on the vehicle. Remember that some of the materials in the vehicle may be hazardous if improperly used or handled, for example, battery acid.**
- **Your vehicle should only be serviced by persons fully competent to do so. Serious personal injury may result to persons not experienced in servicing vehicles.**
- **Always use the proper tools and make certain that they are well maintained.**
- **Never get under the vehicle supported only by a jack. Always use safety stands to support the vehicle.**
- **Never keep the engine running in a poorly ventilated area, such as a garage or other closed areas.**
- **Do not smoke or allow open flames around the fuel or battery. This will cause a fire.**
- **Because the fuel system is under pressure, replacement of the fuel filter should be performed only by your SUBARU dealer.**
- **Wear adequate eye protection to**

– CONTINUED –

guard against getting oil or fluids in your eyes. If something does get in your eyes, thoroughly wash them out with clean water.

- Do not tamper with the wiring of the SRS airbag system or seatbelt pretensioner system, or attempt to take its connectors apart, as that may activate the system or it can render it inoperative. NEVER use a circuit tester for these wiring. If your SRS airbag or seatbelt pretensioner needs service, consult your nearest SUBARU dealer.

NOTE

SUBARU does not endorse the use of non-SUBARU approved flushing systems and strongly advises against performing these services on a SUBARU vehicle. Non-SUBARU approved flushing systems use chemicals and/or solvents which have not been tested or approved by SUBARU. SUBARU warranties do not cover any part of the vehicle which is damaged by adding or applying chemicals and/or solvents other than those approved or recommended by SUBARU.

■ Before checking or servicing in the engine compartment

⚠ WARNING

- Always stop the engine and apply the parking brake to prevent the vehicle from moving.
- Always let the engine cool down. Engine parts become very hot when the engine is running and remain hot for some time after the engine is stopped.
- Do not spill engine oil, engine coolant, brake fluid or any other fluid on hot engine components. This may cause a fire.
- When the ignition switch is in the "ON" position, the cooling fan may operate suddenly even when the engine is stopped. If your body or clothes come into contact with a rotating fan, that could result in serious injury. To avoid risk of injury, perform the following precautions.
  - Models with push-button start system:
    Always turn the push-button ignition switch to the "OFF" position and confirm that the operation indicator on the switch is turned off. Then take the access key fob out from the vehicle.
  - Models without push-button start system:
    Always remove the key from the ignition switch.
- Before performing any servicing on a vehicle equipped with a remote engine start system temporarily place that system in the service mode to prevent it from unexpectedly starting the engine.

■ When checking or servicing in the engine compartment (2.5 L models)

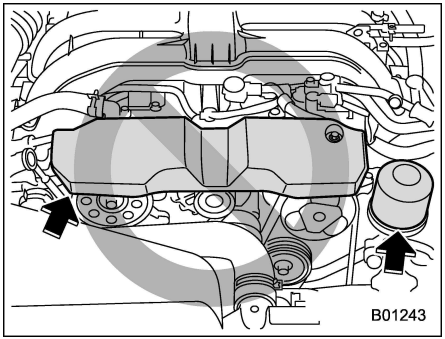

⚠ CAUTION

- **Do not contact the belt cover while checking the components in the engine compartment. Doing so may cause your hand to slip off the belt cover and result in an unexpected injury.**
- **Do not touch the oil filter until the engine has cooled down completely. Doing so may result in a burn or other injury. Note that the oil filter becomes very hot when the engine is running and remains hot for some time after the engine has stopped.**

■ When checking or servicing in the engine compartment while the engine is running

⚠ WARNING

A running engine can be dangerous. Keep your fingers, hands, clothing, hair and tools away from the cooling fan, belts and any other moving engine parts. Removing rings, watches and ties is advisable.

Maintenance tips

Some clips and fender linings must be removed before replacing the air cleaner elements or specific bulbs.

■ Removing and reinstalling clips

▼ Removing clips

There are several types of clips used for your vehicle.

▽ Type A and D clips

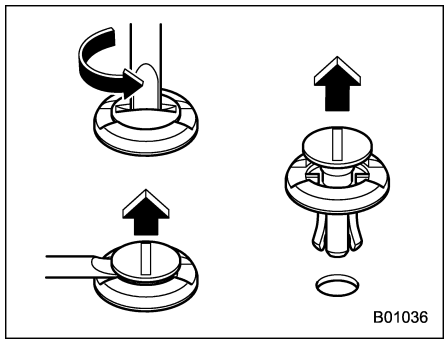

Type A clips

– CONTINUED –

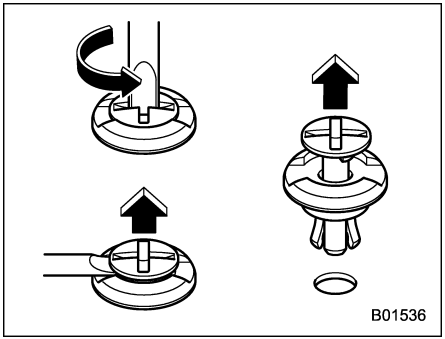

Type D clips

1. Turn the clips counterclockwise using a flat-head screwdriver until the center portion of the clip is raised.
2. Remove the clips with a flat-head screwdriver using leverage.

▽ Type B clips

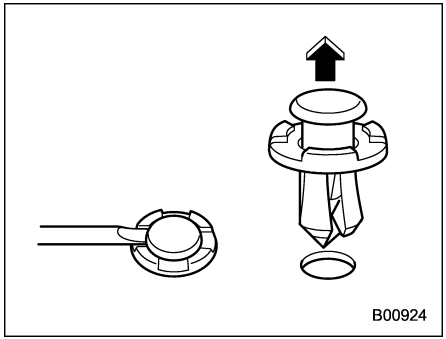

1. Pull out the center portion of the clip using a flat-head screwdriver as shown in the illustration.
2. Pull the protruded center portion to remove the entire body of the clip.

▽ Type C clips

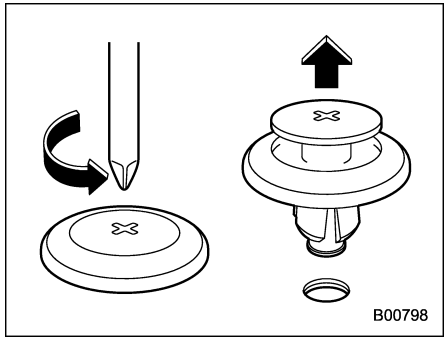

1. Turn the clip counterclockwise using a Phillips screwdriver until the center portion of the clip is raised.
2. Remove the entire clip by pulling it up.

▼ **Reinstalling clips**

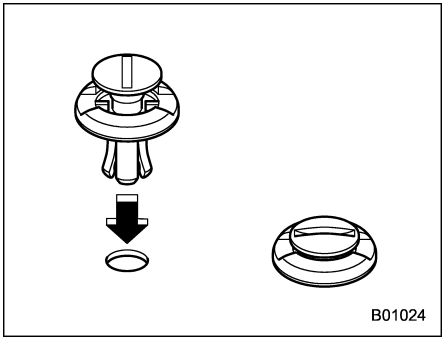

Type A clips

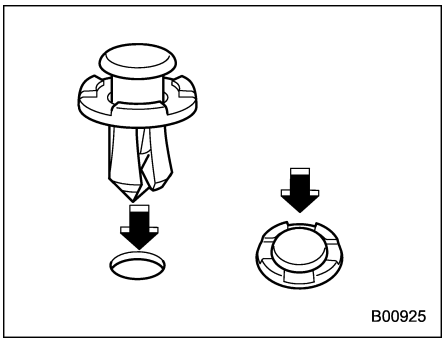

Type B clips

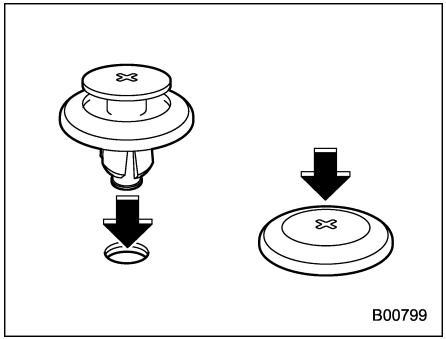

Type C clips

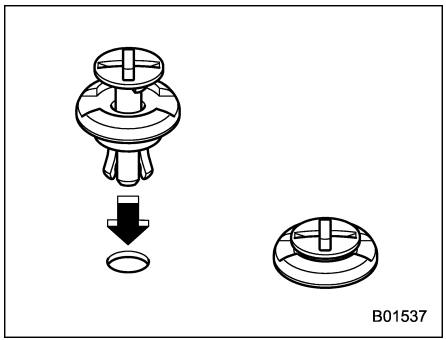

Type D clips

Insert the clip without the center portion first and then push the center portion of the clip into the hole.

Engine hood

⚠ CAUTION

- **When you open the engine hood, do not stand the wiper blades up. Furthermore, while the hood is open, do not operate the windshield wipers. Doing so could result in damage to the engine hood and wiper blades.**
- **Be extremely careful not to catch fingers or other objects when closing the engine hood.**
- **Do not push the hood forcibly to close it. It could deform the metal.**
- **Be extremely careful opening the engine hood when the wind is strong. The engine hood could close suddenly, possibly causing injuries from slamming.**
- **Do not install accessories other than genuine SUBARU parts to the engine hood. If the engine hood becomes too heavy, the stay may not be able to support holding it open.**

– CONTINUED –

To open the hood:

1. If the wiper blades are lifted off the windshield, return them to their original positions.

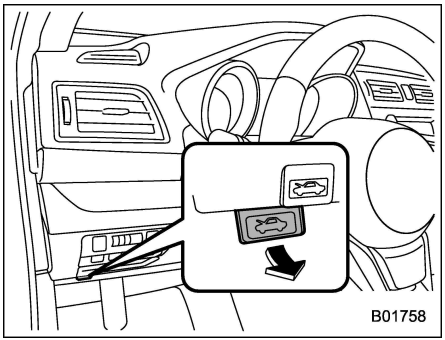

2. Pull the hood lock release knob under the instrument panel.

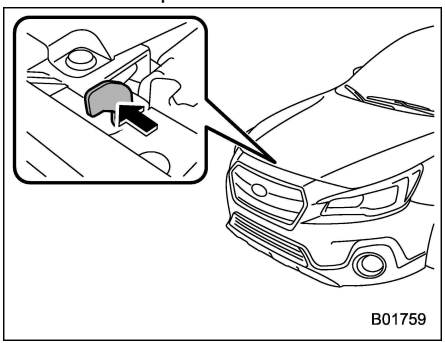

3. Release the secondary hood lock by moving the lever between the front grille and the hood toward the left.
4. Lift up the hood.

To close the hood:

1. Lower the hood to a height of approximately 5.9 in (15 cm) above its closed position and then throw it down.
2. After closing the hood, be sure the hood is securely locked.

If this does not close the hood, release it from a slightly higher position.

WARNING

Always check that the hood is properly locked before you start driving. If it is not, it might fly open while the vehicle is moving and block your view, which may cause an accident and serious bodily injury.

Engine compartment overview

■ 2.5 L models

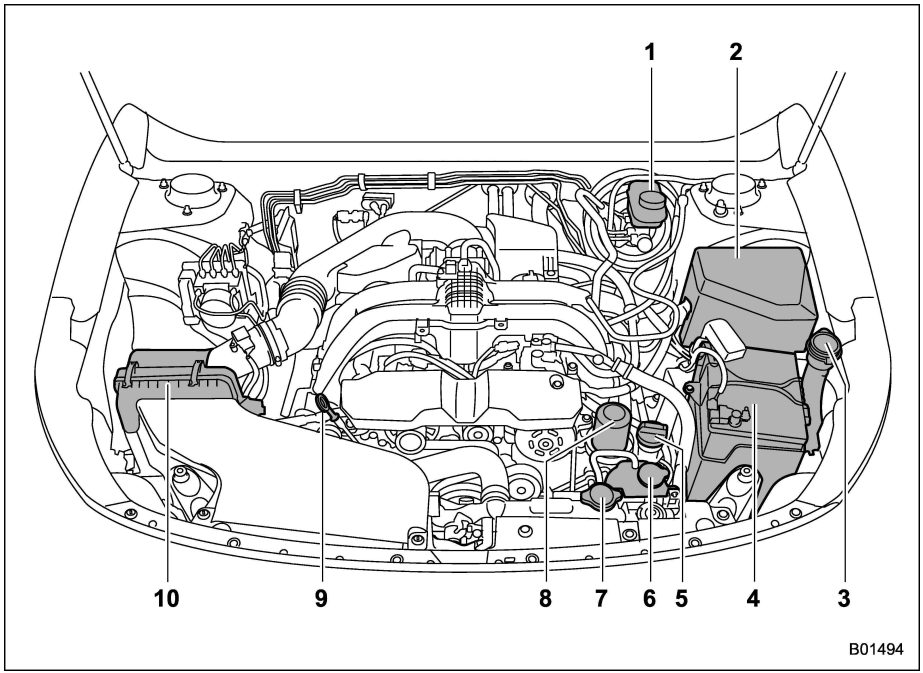

1) Brake fluid reservoir (page 11-19)
2) Fuse box (page 11-36)
3) Windshield washer tank (page 11-30)
4) Battery (page 11-35)
5) Engine oil filler cap (page 11-11)
6) Engine coolant reservoir (page 11-15)
7) Radiator cap (page 11-15)
8) Engine oil filter (page 11-13)
9) Engine oil level gauge (page 11-11)
10) Air cleaner case (page 11-15)

– CONTINUED –

■ 3.6 L models

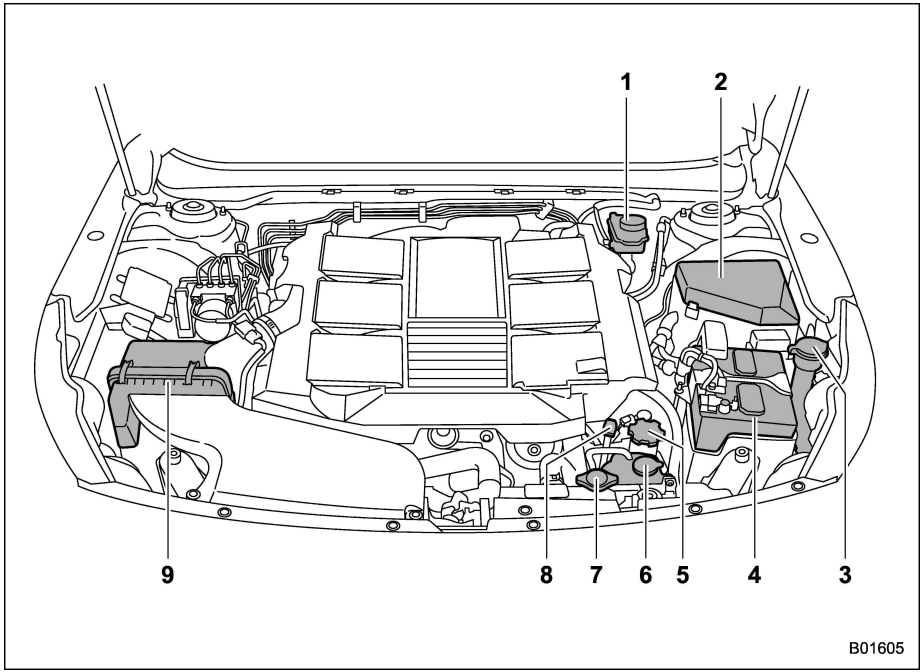

1) Brake fluid reservoir (page 11-19)
2) Fuse box (page 11-36)
3) Windshield washer tank (page 11-30)
4) Battery (page 11-35)
5) Engine oil filler cap (page 11-11)
6) Engine coolant reservoir (page 11-15)
7) Radiator cap (page 11-15)
8) Engine oil level gauge (page 11-11)
9) Air cleaner case (page 11-15)

Engine oil

CAUTION

- **If the level gauge is not pulled out easily, twist the level gauge right and left, then pull it out. Otherwise, you may be injured accidentally straining yourself.**
- **Use only engine oil with the recommended grade and viscosity.**
- **Be careful not to spill engine oil when adding it. If oil touches the exhaust pipe, it may cause a bad smell, smoke, and/or a fire. If engine oil gets on the exhaust pipe, be sure to wipe it off.**

■ Engine oil consumption

Some engine oil will be consumed while driving. The rate of consumption can be affected by such factors as transmission type, driving style, terrain and temperature. Under the following conditions, oil consumption can be increased and thus require refilling between maintenance intervals:

- When the engine is new and within the break-in period
- When the engine oil is of lower quality
- When the incorrect oil viscosity is used
- When engine braking is employed (repeatedly)
- When the engine is operated at high engine speeds (for extended periods of time)
- When the engine is operated under heavy loads (for extended periods of time)
- When towing a trailer (Outback)
- When the engine idles for extended periods of time
- When the vehicle is operated in stop and go and/or heavy traffic situations
- When the vehicle is used under severe thermal conditions
- When the vehicle accelerates and decelerates frequently

Under these or similar conditions, you should check your oil at least every 2nd fuel fill-up and change your engine oil more frequently. Different drivers in the same car may experience different results. If your oil consumption rate is greater than expected, contact your authorized SUBARU retailer who may perform a test under controlled conditions.

■ Checking the oil level

1. Park the vehicle on a level surface and stop the engine. If you check the oil level just after stopping the engine, wait a few minutes for the oil to drain back into the oil pan before checking the level.

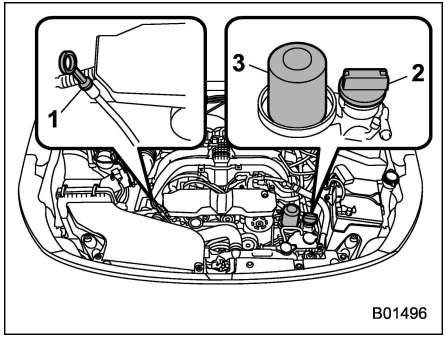

2.5 L models
1) Oil level gauge
2) Oil filler cap
3) Oil filter

– CONTINUED –

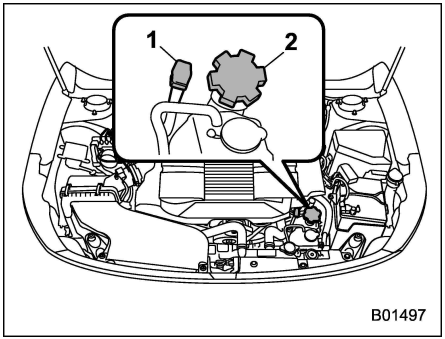

3.6 L models
1) Oil level gauge
2) Oil filler cap

CAUTION

If the level gauge is not pulled out easily, twist the level gauge right and left, then pull it out. Otherwise, you may be injured accidentally straining yourself.

2. Pull out the level gauge, wipe it clean, and insert it again.
3. Be sure the level gauge is correctly inserted until it stops.

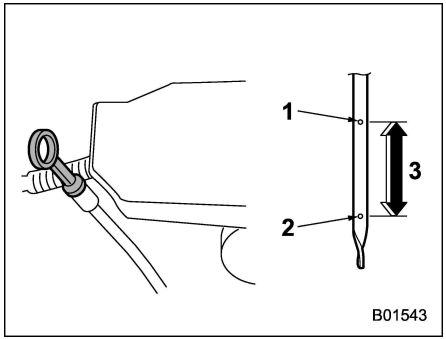

2.5 L models
1) Full level
2) Low level
3) Approximately 1.1 US qt (1.0 liter, 0.9 Imp qt) from low level to full level

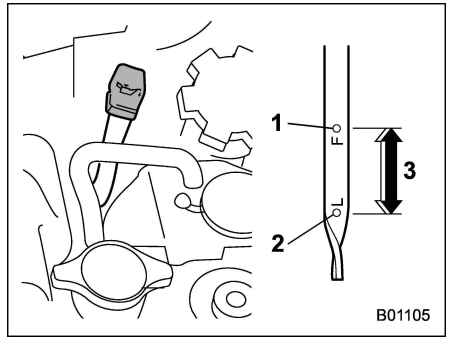

3.6 L models
1) Full level
2) Low level
3) Approximately 1.1 US qt (1.0 liter, 0.9 Imp qt) from low level to full level

4. Pull out the oil level gauge again.
5. **2.5 L models:**

Check the oil levels on both sides of the level gauge. The engine oil level must be judged by the lowest of the two levels. If the oil level is below the low level mark, add oil so that the full level is reached.

3.6 L models:

Check the oil level on the gauge. If the oil level is below the low level mark, add oil so that the full level is reached.

⚠ CAUTION

- **For 2.5 L models, be careful not to touch the engine oil filter when removing the oil filler cap. Doing so may result in a burn, a pinched finger, or may cause some other injury.**
- **Use only engine oil with the recommended grade and viscosity.**
- **Be careful not to spill engine oil when adding it. If oil touches the exhaust pipe, it may cause a bad smell, smoke, and/or a fire. If engine oil gets on the exhaust pipe, be sure to wipe it off.**

To add engine oil, remove the engine oil filler cap and slowly pour engine oil through the filler neck. After pouring oil into the engine, you must use the level gauge to confirm that the oil level is correct.

NOTE

To prevent overfilling the engine oil, do not add any additional oil above the full level when the engine is cold.

■ Changing the oil and oil filter

Change the oil and oil filter according to the maintenance schedule in the “Warranty and Maintenance Booklet”.

NOTE

- **Changing the engine oil and oil filter should be performed by a well-trained expert. Contact your SUBARU dealer for changing the engine oil and oil filter. Fully trained mechanics are on standby at a SUBARU dealer to utilize the special tools, spare parts and recommended oil for this work, and also, used oils are properly disposed of.**
- **If performing oil replacement yourself, observe the local regulations and dispose of waste oil properly.**

■ Recommended grade and viscosity

⚠ CAUTION

Use only engine oil with the recommended grade and viscosity.

Refer to “Engine oil” ☞12-4.

NOTE

Engine oil viscosity (thickness) affects fuel economy. Oils of lower viscosity provide better fuel economy. However, in hot weather, oil of higher viscosity is required to properly lubricate the engine.

■ Synthetic oil

You should use synthetic engine oil that meets the same requirements given for conventional engine oil. When using synthetic oil, you must use oil of the same classification, viscosity and grade shown in this Owner’s Manual. Refer to “Engine oil” ☞12-4. Also, you must follow the oil and filter changing intervals shown in the Warranty and Maintenance booklet.

NOTE

Synthetic oil of the grade and viscosity noted in chapter 12 is the recommended engine oil for optimum engine performance. Conventional oil may be used if synthetic oil is unavailable.

Cooling system

⚠ WARNING

Never attempt to remove the radiator cap until the engine has been shut off and has cooled down completely. Since the coolant is under pressure, you may suffer serious burns from a spray of boiling hot coolant when the cap is removed.

⚠ CAUTION

- **Vehicles are filled at the factory with SUBARU Super Coolant that does not require the first change for 11 years/137,500 miles (11 years/220,000 km). This coolant should not be mixed with any other brand or type of coolant during this period. Mixing with a different coolant will reduce the life of the coolant. Should it be necessary to top off the coolant for any reason, use only SUBARU Super Coolant.**

  If the SUBARU Super Coolant is diluted with another brand or type, the maintenance interval is shortened to that of the mixing coolant.
- **Do not splash the engine coolant over painted parts. The alcohol contained in the engine coolant may damage the paint surface.**

■ Cooling fan, hose and connections

Your vehicle employs an electric cooling fan which is thermostatically controlled to operate when the engine coolant reaches a specific temperature.

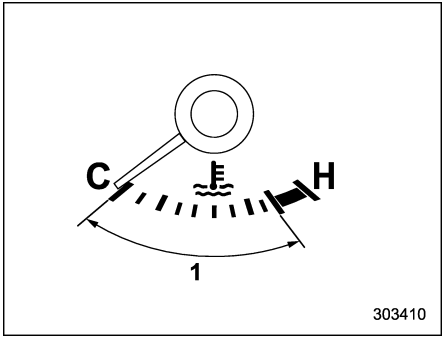

1) Normal operating range

If the radiator cooling fan does not operate even when the engine coolant temperature gauge exceeds the normal operating range, the cooling fan circuit may be defective. Refer to “Temperature gauge” ☞3-11.

Check the fuse and replace it if necessary. Refer to “Fuses” ☞11-36 and “Fuses and circuits” ☞12-10. If the fuse is not blown, have the cooling system checked by your SUBARU dealer.

If frequent addition of coolant is necessary, there may be a leak in the engine cooling system. It is recommended that the cooling system and connections be checked for leaks, damage, or looseness.

■ Engine coolant

▼ Checking the coolant level

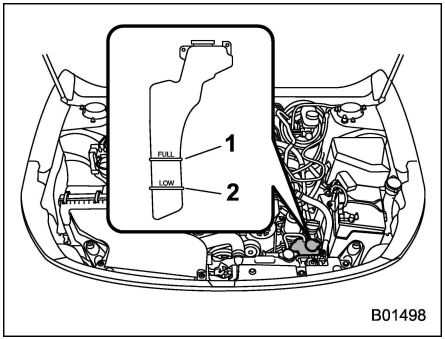

1) "FULL" level mark
2) "LOW" level mark

Check the coolant level at each fuel stop.

1. Check the coolant level on the outside of the reservoir while the engine is cool.
2. If the level is close to or lower than the "LOW" level mark, add coolant up to the "FULL" level mark. If the reserve tank is empty, remove the radiator cap and refill as required.
3. After refilling the reserve tank and the radiator, reinstall the caps and check that the rubber gaskets inside the radiator cap are in the proper position.

⚠ CAUTION

- **Be careful not to spill engine coolant when adding it. If coolant touches the exhaust pipe, it may cause a bad smell, smoke, and/or a fire. If engine coolant gets on the exhaust pipe, be sure to wipe it off.**
- **Do not splash the engine coolant over painted parts. The alcohol contained in the engine coolant may damage the paint surface.**

▼ Changing the coolant

It may be difficult to change the coolant. Have the coolant changed by your SUBARU dealer if necessary.

The coolant should be changed according to the maintenance schedule in the "Warranty and Maintenance Booklet".

Air cleaner element

⚠ WARNING

Do not operate the engine with the air cleaner element removed. The air cleaner element not only filters intake air but also stops flames if the engine backfires. If the air cleaner element is not installed when the engine backfires, you could be burned.

⚠ CAUTION

When replacing the air cleaner element, use a genuine SUBARU air cleaner element. If it is not used, there is the possibility of causing a negative effect to the engine.

The air cleaner element functions as a filter screen. When the element is perforated or removed, engine wear will be excessive and engine life shortened.

The air cleaner element is a dry type. It is unnecessary to clean or wash the element.

– CONTINUED –

■ Replacing the air cleaner element

Replace the air cleaner element according to the maintenance schedule in the “Warranty and Maintenance Booklet”. Under extremely dusty conditions, replace it more frequently. It is recommended that you always use genuine SUBARU parts.

▼ 2.5 L models

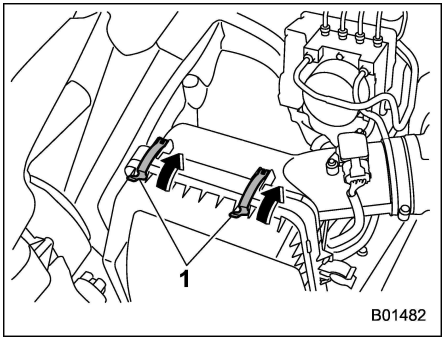

1) Clip

1. Unsnap the two clips holding the air cleaner case (rear).

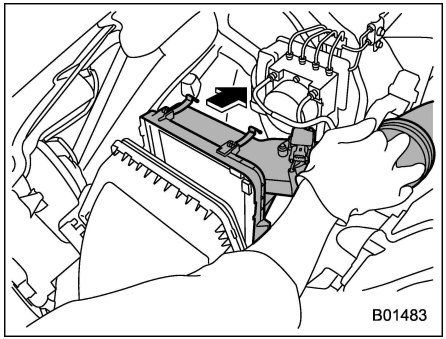

2. Open the air cleaner case.

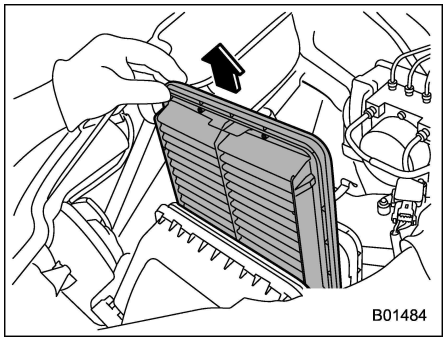

3. Remove the air cleaner element.

⚠ CAUTION

If the inside of the air cleaner case is extremely soiled (for example, by sand), contact a SUBARU dealer and have the air cleaner case cleaned.

4. If you find large foreign objects such as leaves inside the air cleaner case, remove the foreign objects.

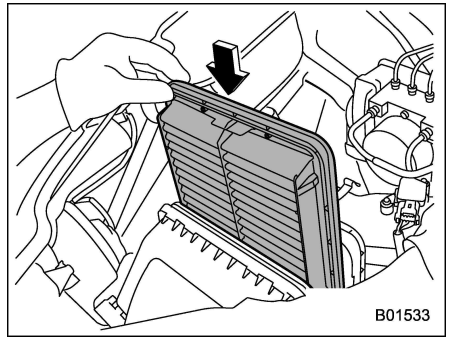

5. Install a new air cleaner element in the way the longitudinal side and the transverse side face as shown in the illustration.

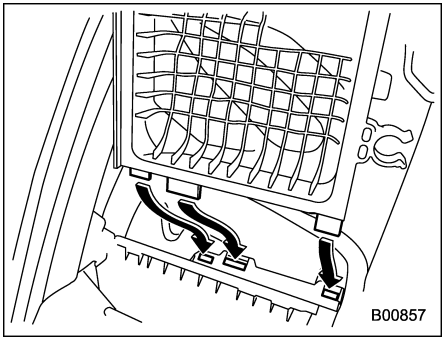

6. To install the air cleaner case (rear), insert the three projections on the air cleaner case (rear) into the slits on the air cleaner case (front).
7. Install in the reverse order of removal.

▼ **3.6 L models**

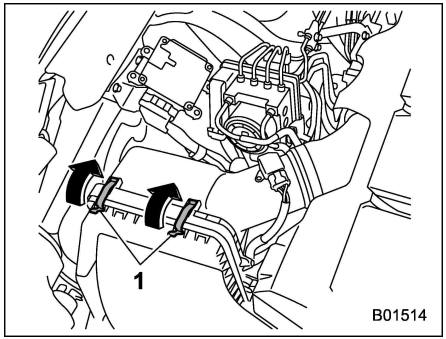

1) Clips

1. Unsnap the two clips holding the air cleaner case (rear).

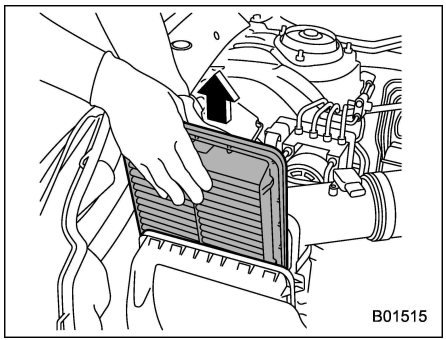

2. Open the air cleaner case and remove the air cleaner element.

⚠ CAUTION

If the inside of the air cleaner case is extremely soiled (for example, by sand), contact a SUBARU dealer and have the air cleaner case cleaned.

3. If you find large foreign objects such as leaves inside the air cleaner case, remove the foreign objects.

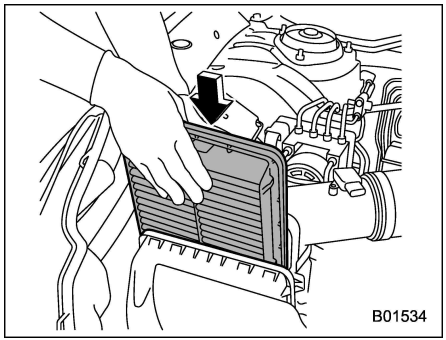

4. Install a new air cleaner element in the way the longitudinal side and the transverse side face as shown in the illustration.

– CONTINUED –

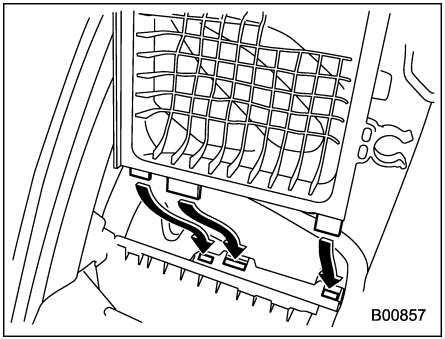

5. To install the air cleaner case (rear), insert the three projections on the air cleaner case (rear) into the slits on the air cleaner case (front).
6. Install the removed parts in the reverse order of removal.

Spark plugs

It may be difficult to replace the spark plugs. It is recommended that you have the spark plugs replaced by your SUBARU dealer.

The spark plugs should be replaced according to the maintenance schedule in the “Warranty and Maintenance Booklet”.

■ Recommended spark plugs

Refer to “Electrical system” ☞12-9.

Drive belts

It is unnecessary to check the deflection of the drive belt periodically because your engine is equipped with an automatic belt tension adjuster. However, replacement of the belt should be done according to the maintenance schedule in the “Warranty and Maintenance Booklet”. Consult your SUBARU dealer for replacement.

If the belt is loose, cracked or worn, contact your SUBARU dealer.

Continuously variable transmission fluid

There is no fluid level gauge. It is unnecessary to check the continuously variable transmission fluid level. However, if necessary, consult your SUBARU dealer for inspection.

Front differential gear oil and rear differential gear oil

It is not necessary to check the gear oil level. Check that there are no cracks, damage or leakage. However, the oil inspection should be performed according to the maintenance schedule in the “Warranty and Maintenance Booklet”. Consult your SUBARU dealer for details.

■ Recommended grade and viscosity

Each oil manufacturer has its own base oils and additives. Never use different brands together. For details, refer to “Front differential and rear differential gear oil” ☞12-7.

⚠ CAUTION

Using a differential gear oil other than the specified oil may cause a decline in vehicle performance.

Brake fluid

■ Checking the fluid level

⚠ WARNING

- **Never let brake fluid contact your eyes because brake fluid can be harmful to your eyes. If brake fluid gets in your eyes, immediately flush them thoroughly with clean water. For safety, when performing this work, wearing eye protection is advisable.**
- **Brake fluid absorbs moisture from the air. Any absorbed moisture can cause a dangerous loss of braking performance.**
- **If the vehicle requires frequent refilling, there may be a leak. If you suspect a problem, have the vehicle checked at your SUBARU dealer.**

⚠ CAUTION

- **When adding brake fluid, be careful not to allow any dirt into the reservoir.**
- **Never splash the brake fluid over painted surfaces or rubber parts.**

– CONTINUED –

Alcohol contained in the brake fluid may damage them.

- **Be careful not to spill brake fluid when adding it. If brake fluid touches the exhaust pipe, it may cause a bad smell, smoke, and/or a fire. If brake fluid gets on the exhaust pipe, be sure to wipe it off.**

Visually check the brake fluid level of the reservoir monthly on the even surface.

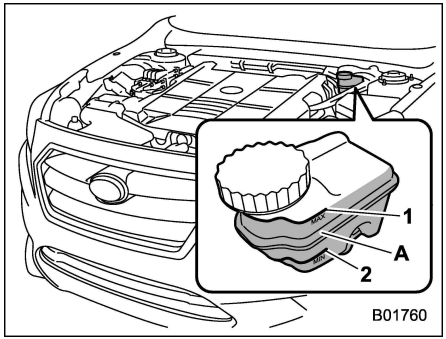

1) "MAX" level line
2) "MIN" level line
A) The brake fluid level must be checked in this area.

Be sure to check the brake fluid level from the outside of the reservoir. If the fluid level is below "MIN", top up brake fluid to "MAX". Use only brake fluid from a sealed container.

■ Recommended brake fluid

Refer to "Fluids" ☞12-8.

⚠ CAUTION

Never use different brands of brake fluid together. Also, avoid mixing DOT 3 and DOT 4 brake fluids even if they are the same brand.

Brake booster

If the brake booster does not operate as described in the following procedure, have it checked by your SUBARU dealer.

1. With the engine off, depress the brake pedal several times, applying the same pedal force each time. The distance the pedal travels should not vary.
2. With the brake pedal depressed, start the engine. The pedal should move slightly down to the floor.
3. With the brake pedal depressed, stop the engine and keep the pedal depressed for 30 seconds. The pedal height should not change.
4. Start the engine again and run for approximately 1 minute then turn it off. Depress the brake pedal several times to check the brake booster. The brake booster operates properly if the pedal stroke decreases with each depression.

Brake pedal

Check the brake pedal free play and reserve distance according to the maintenance schedule in the “Warranty and Maintenance Booklet”.

■ Checking the brake pedal free play

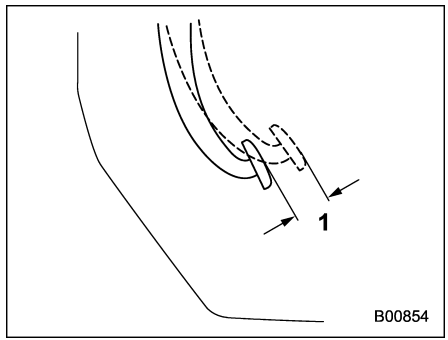

1) 0.02 – 0.11 in (0.5 – 2.7 mm)

Stop the engine and firmly depress the brake pedal several times. Lightly pull the brake pedal up with one finger to check the free play with a force of less than 2 lbf (10 N, 1 kgf).

If the free play is not within proper specification, contact your SUBARU dealer.

■ Checking the brake pedal reserve distance

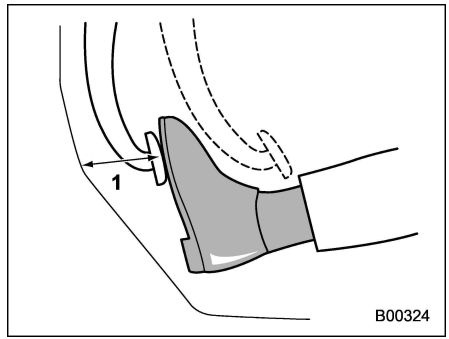

1) More than 2.56 in (65 mm)

Depress the pedal with a force of approximately 66 lbf (294 N, 30 kgf) and measure the distance between the upper surface of the pedal pad and the floor.

When the measurement is smaller than the specification, or when the pedal does not operate smoothly, contact with your SUBARU dealer.

Replacement of brake pad

⚠ CAUTION

- **If you continue to drive despite the scraping noise from the audible brake pad wear indicator, it will result in the need for costly brake rotor repair or replacement.**
- **It is recommended that you disconnect the vehicle battery before replacing the brake pad. However, it is dangerous to disconnect the vehicle battery. We recommend that you have your SUBARU dealer replace the brake pad.**

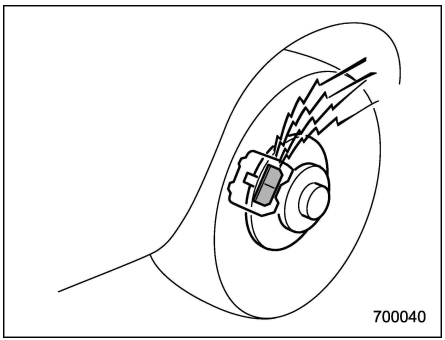

The disc brakes have audible wear indicators on the brake pads. If the brake pads wear close to their service limit, the wear indicator makes a very audible scraping noise when the brake pedal is applied.

If you hear this scraping noise each time you apply the brake pedal, have the brake pads serviced by your SUBARU dealer as soon as possible.

■ Breaking-in of new brake pads

When replacing the brake pad, use only genuine SUBARU parts. After replacement, the new parts must be broken in as follows:

▼ Brake pad

While maintaining a speed of 30 to 40 mph (50 to 65 km/h), step on the brake pedal lightly. Repeat this five or more times. Also, apply and release the electronic parking brake five or more times.

Tires and wheels

■ Types of tires

You should be familiar with type of tires present on your vehicle.

▼ All season tires

The factory-installed tires on your new vehicle are all season tires.

All season tires are designed to provide an adequate measure of traction, handling and braking performance in year-round driving including snowy and icy road conditions. However all season tires do not offer as much traction performance as winter (snow) tires in heavy or loose snow or on icy roads.

All season tires are identified by “ALL SEASON” and/or “M+S” (Mud & Snow) on the tire sidewall.

▼ Summer tires

Summer tires are high-speed capability tires best suited for highway driving under dry conditions.

Summer tires are inadequate for driving on slippery roads such as on snow-covered or icy roads.

If you drive your vehicle on snow-covered or icy roads, we strongly recommend the use of winter (snow) tires.

When installing winter tires, be sure to

replace all four tires.

▼ **Winter (snow) tires**

Winter tires are best suited for driving on snow-covered and icy roads. However winter tires do not perform as well as summer tires and all season tires on roads other than snow-covered and icy roads.

■ Tire pressure monitoring system (TPMS) (if equipped)

The tire pressure monitoring system provides the driver with a warning message by sending a signal from a sensor that is installed in each wheel when tire pressure is severely low. The tire pressure monitoring system will activate only when the vehicle is driven. Also, this system may not react immediately to a sudden drop in tire pressure (for example, a blow-out caused by running over a sharp object).

If you adjust the tire pressures in a warm garage and will then drive the vehicle in cold outside air, the resulting drop in tire pressures may cause the low tire pressure warning light to illuminate. To avoid this problem when adjusting the tire pressures in a warm garage, inflate the tires to pressures higher than those shown on the tire placard. Specifically, inflate them by an extra 1 psi (6.9 kPa, 0.07 kgf/cm^2) for every difference of 10°F (5.6°C) between the temperature in the garage and the temperature outside. By way of example, the following table shows the required tire pressures that correspond to various outside temperatures when the temperature in the garage is 60°F (15.6°C).

Example:

Tire size: 225/55R17 97V, 225/50R18 95H

Standard tire pressures:

Front: 33 psi (230 kPa, 2.3 kgf/cm^2)

Rear: 32 psi (220 kPa, 2.2 kgf/cm^2)

Garage temperature: 60°F (15.6°C)

Outside temperature	Adjusted pressure [psi (kPa, kgf/cm^2)]	
	Front	Rear
30°F (−1°C)	36 (250, 2.5)	35 (240, 2.4)
10°F (−12°C)	38 (265, 2.65)	37 (255, 2.55)
−10°F (−23°C)	40 (280, 2.8)	39 (270, 2.7)

Example:

Tire size: 225/65R17 102H, 225/60R18 100H

Standard tire pressures:

Front: 35 psi (240 kPa, 2.4 kgf/cm^2)

Rear: 33 psi (230 kPa, 2.3 kgf/cm^2)

Garage temperature: 60°F (15.6°C)

Outside temperature	Adjusted pressure [psi (kPa, kgf/cm^2)]	
	Front	Rear
30°F (−1°C)	38 (265, 2.65)	36 (250, 2.5)
10°F (−12°C)	40 (280, 2.8)	38 (265, 2.65)
−10°F (−23°C)	42 (295, 2.95)	40 (280, 2.8)

If the low tire pressure warning light illuminates when you drive the vehicle in cold outside air after adjusting the tire pressures in a warm garage, re-adjust the tire pressures using the method described above. Then, increase the vehicle speed to at least 20 mph (32 km/h) and check to see that the low tire pressure warning light goes off a few minutes later. If the low tire pressure warning light does not go off, the tire pressure monitoring system may not be functioning normally. In this event, go to a SUBARU dealer to have the system inspected as soon as possible.

While the vehicle is driven, friction between tires and the road surface causes the tires to warm up. After illumination of the low tire pressure warning light, any increase in the tire pressures caused by an increase in the outside air temperature or by an increase in the temperature in the tires can cause the low tire pressure warning light to go off.

– CONTINUED –

System resetting is necessary when the wheels are changed (for example, a switch to snow tires) and new TPMS valves are installed on the newly fitted wheels. Have this work performed by a SUBARU dealer following wheel replacement.

It may not be possible to install TPMS valves on certain wheels that are on the market. Therefore, if you change the wheels (for example, a switch to snow tires), use wheels that have the same part number as the standard-equipment wheels. Without four operational TPMS valve/sensors on the wheels, the TPMS will not fully function and the warning light in the instrument panel will illuminate steadily after blinking for approximately one minute.

When a tire is replaced, adjustments are necessary to ensure continued normal operation of the tire pressure monitoring system. As with wheel replacement, therefore, you should have the work performed by a SUBARU dealer.

⚠ WARNING

If the low tire pressure warning light does not illuminate briefly after the ignition switch is turned ON or the light illuminates steadily after blinking for approximately one minute, you should have your Tire Pressure Monitoring System checked at a SUBARU dealer as soon as possible.

If this light illuminates while driving, never brake suddenly. Instead, perform the following procedure. Otherwise an accident involving serious vehicle damage and serious personal injury could occur.

1) **Keep driving straight ahead while gradually reducing speed.**
2) **Slowly pull off the road to a safe place.**

If this light still illuminates while driving after adjusting the tire pressure, a tire may have significant damage and a fast leak that causes the tire to lose air rapidly. If you have a flat tire, replace it with a spare tire as soon as possible.

When a spare tire is mounted or a wheel rim is replaced without the original pressure sensor/transmitter being transferred, the low tire pressure warning light will illuminate steadily after blinking for approximately one minute. This indicates the TPMS is unable to monitor all four road wheels. Contact your SUBARU dealer as soon as possible for tire and sensor replacement and/or system resetting. If the light illuminates steadily after blinking for approximately one minute, promptly contact a SUBARU dealer to have the system inspected.

■ Tire inspection

Check on a daily basis that the tires are free from serious damage, nails, and stones. At the same time, check the tires for abnormal wear.

Contact your SUBARU dealer immediately if you find any problem.

NOTE

- **When the wheels and tires strike curbs or are subjected to harsh treatment as when the vehicle is driven on a rough surface, they can suffer damage that cannot be seen with the naked eye. This type of damage does not become evident until time has passed. Try not to drive over curbs, potholes or on other rough surfaces. If doing so is unavoidable, keep the vehicle's speed down to a walking pace or less, and approach the curbs as squarely as possible. Also, make sure the tires are not pressed against the curb when you park the vehicle.**

- **If you feel unusual vibration while driving or find it difficult to steer the vehicle in a straight line, one of the tires and/or wheels may be damaged. Drive slowly to the nearest authorized SUBARU dealer and have the vehicle inspected.**

■ Tire pressures and wear

Maintaining the correct tire pressures helps to maximize the tires' service lives and is essential for good running performance. Check and, if necessary, adjust the pressure of each tire (including the spare) at least once a month (for example, during a fuel stop) and before any long journey.

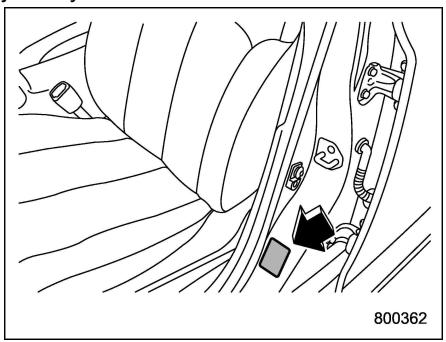

Tire placard

Check the tire pressures when the tires are cold. Use a pressure gauge to adjust the tire pressures to the values shown on the tire placard. The tire placard is located on the door pillar on the driver's side.

Driving even a short distance warms up the tires and increases the tire pressures. Also, the tire pressures are affected by the outside temperature. It is best to check tire pressure outdoors before driving the vehicle.

When a tire becomes warm, the air inside it expands, causing the tire pressure to increase. Be careful not to mistakenly release air from a warm tire to reduce its pressure.

NOTE

- **The air pressure in a tire increases by approximately 4.3 psi (30 kPa, 0.3 kgf/cm^2) when the tire becomes warm.**
- **The tires are considered cold when the vehicle has been parked for at least 3 hours or has been driven less than 1 mile (1.6 km).**

⚠ WARNING

Do not let air out of warm tires to adjust pressure. Doing so will result in low tire pressure.

Incorrect tire pressures detract from controllability and ride comfort, and they cause the tires to wear abnormally.

- **Correctly inflated tires** (tread worn evenly)

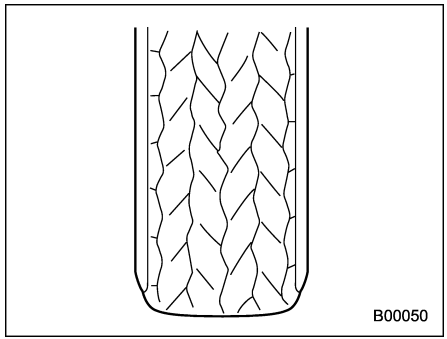

Roadholding is good, and steering is responsive. Rolling resistance is low, so fuel consumption is also lower.

– CONTINUED –

● **Under inflated tires** (tread worn at shoulders)

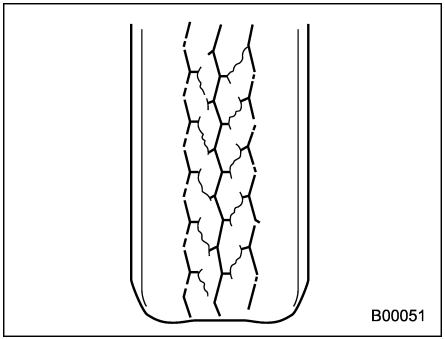

Rolling resistance is high, so fuel consumption is also higher.

● **Over inflated tires** (tread worn in center)

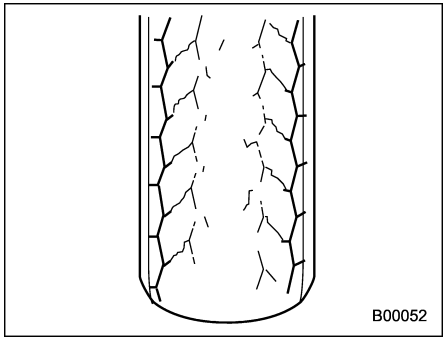

Ride comfort is poor. Also, the tire magnifies the effects of road surface bumps and dips, possibly resulting in vehicle damage.

⚠ WARNING

Driving at high speeds with excessively low tire pressures can cause the tires to deform severely and to rapidly become hot. A sharp increase in temperature could cause tread separation, and destruction of the tires. The resulting loss of vehicle control could lead to an accident.

■ Wheel balance

Each wheel was correctly balanced when your vehicle was new, but the wheels will become unbalanced as the tires become worn during use. Wheel imbalance causes the steering wheel to vibrate slightly at certain vehicle speeds and detracts from the vehicle's straight-line stability. It can also cause steering and suspension system problems and abnormal tire wear. If you suspect that the wheels are not correctly balanced, have them checked and adjusted by your SUBARU dealer. Also have them adjusted after tire repairs and after tire rotation.

⚠ CAUTION

Loss of correct wheel alignment causes the tires to wear on one side and reduces the vehicle's running stability. Contact your SUBARU dealer if you notice abnormal tire wear.

NOTE

The suspension system is designed to hold each wheel at a certain alignment (relative to the other wheels and to the road) for optimum straight-line stability and cornering performance.

Wear indicators

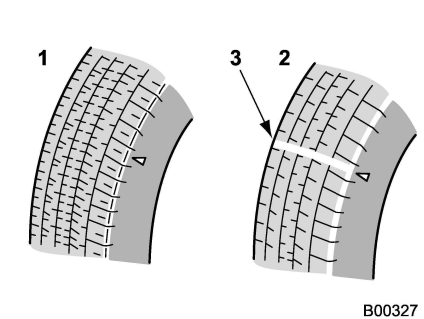

1) New tread
2) Worn tread
3) Tread wear indicator

Each tire incorporates a tread wear indicator, which becomes visible when the depth of the tread grooves decreases to 0.063 in (1.6 mm). A tire must be replaced when the tread wear indicator appears as a solid band across the tread.

WARNING

When a tire's tread wear indicator becomes visible, the tire is worn beyond the acceptable limit and must be replaced immediately. With a tire in this condition, driving at high speeds in wet weather can cause the vehicle to hydroplane. The resulting loss of vehicle control can lead to an accident.

NOTE

For safety, inspect the tire tread regularly and replace the tires before their tread wear indicators become visible.

Rotational direction of tires

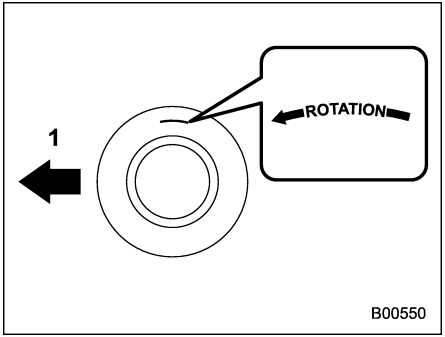

Example of rotational direction marked on the sidewall
1) Front

If the tires have specific rotational direction, refer to the arrow marked on the side wall.

The arrow should be pointing forward direction when the wheels are fitted.

Tire rotation

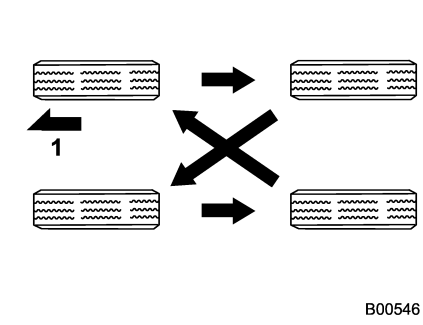

Vehicles equipped with 4 non-unidirectional tires
1) Front

– CONTINUED –

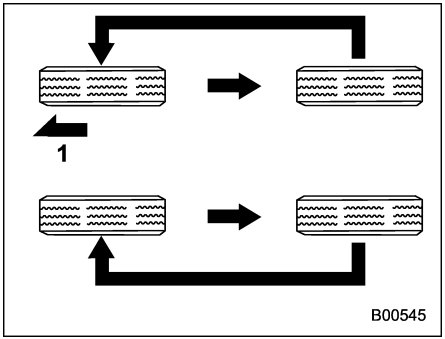

Vehicles equipped with unidirectional tires
1) Front

Tire wear varies from wheel to wheel. Move the tires to the positions shown in the illustration each time they are rotated. For the tire rotation schedule, refer to the "Warranty and Maintenance Booklet".

Replace any damaged or unevenly worn tire at the time of rotation. After tire rotation, adjust the tire pressures and make sure the wheel nuts are correctly tightened.

After driving approximately 600 miles (1,000 km), check the wheel nuts again and retighten any nut that has become loose.

■ Tire replacement

The wheels and tires are important and integral parts of your vehicle's design; they cannot be changed arbitrarily. The tires fitted as standard equipment are optimally matched to the characteristics of the vehicle and were selected to give the best possible combination of running performance, ride comfort, and service life. It is essential for every tire to have a size and construction matching those shown on the tire placard and to have a speed symbol and load index matching those shown on the tire placard.

Using tires of a non-specified size detracts from controllability, ride comfort, braking performance, speedometer accuracy and odometer accuracy. It also creates incorrect body-to-tire clearances and inappropriately changes the vehicle's ground clearance.

All four tires must be the same in terms of manufacturer, brand (tread pattern), construction, and size. You are advised to replace the tires with new ones that are identical to those fitted as standard equipment.

For safe vehicle operation, SUBARU recommends replacing all four tires at the same time.

⚠ WARNING

- **When replacing or installing tire(s), all four tires must be the same for the following items.**
  (a) Size
  (b) Circumference
  (c) Speed symbol
  (d) Load index
  (e) Construction
  (f) Manufacturer
  (g) Brand (tread pattern)
  (h) Degrees of wear

  For items (a) to (d), you must obey the specification that is printed on the tire placard. The tire placard is located on the driver's door pillar.

  If all four tires are not the same in items (a) to (h), it may lead to serious mechanical damage to the drive train of your car and affect the following factors.
  — Ride
  — Handling
  — Braking
  — Speedometer/Odometer

calibration

— Clearance between the body and tires

It also may be dangerous and lead to loss of vehicle control, and it can lead to an accident.

- **Use only radial tires. Do not use radial tires together with belted bias tires and/or bias-ply tires. Doing so can dangerously reduce controllability, resulting in an accident.**

■ Wheel replacement

When replacing wheels due, for example, to damage, make sure the replacement wheels match the specifications of the wheels that are fitted as standard equipment. Replacement wheels are available from SUBARU dealers.

⚠ WARNING

Use only those wheels that are specified for your vehicle. Wheels not meeting specifications could interfere with brake caliper operation and may cause the tires to rub against the wheel well housing during turns. The resulting loss of vehicle control could lead to an accident.

Alloy wheels

Alloy wheels can be scratched and damaged easily. Handle them carefully to maintain their appearance, performance, and safety.

- When any of the wheels is removed and replaced for tire rotation or to change a flat, always check the tightness of the wheel nuts after driving approximately 600 miles (1,000 km). If any nut is loose, tighten it to the specified torque.
- Never apply oil to the threaded parts, wheel nuts, or tapered surface of the wheel.
- Never let the wheel rub against sharp protrusions or curbs.
- When wheel nuts, balance weights, or the center cap is replaced, be sure to replace them with genuine SUBARU parts designed for alloy wheels.

Windshield washer fluid

CAUTION

Never use engine coolant as washer fluid because it could cause paint damage.

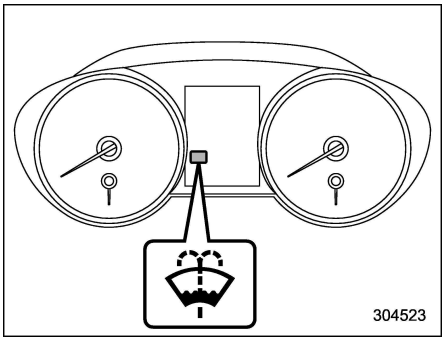

Windshield washer fluid warning indicator

When there is only a small amount of washer fluid remaining, the windshield washer fluid warning indicator will appear. When this occurs, refill the washer fluid as follows.

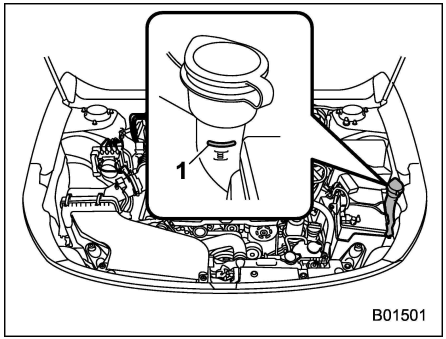

1) "FULL" mark

Remove the washer tank filler cap, then add fluid until it reaches the "FULL" mark on the tank.

Use windshield washer fluid. If windshield washer fluid is unavailable use clean water.

In areas where water freezes in winter, use an anti-freeze type windshield washer fluid. SUBARU Windshield Washer Fluid contains 58.5% methyl alcohol and 41.5% surfactant, by volume. Its freezing temperature varies according to how much it is diluted, as indicated in the following table.

Washer Fluid Concentration	Freezing Temperature
30%	**10.4°F (−12°C)**
50%	**−4°F (−20°C)**
100%	**−49°F (−45°C)**

CAUTION

Never use engine coolant as washer fluid because it could cause paint damage.

In order to prevent freezing of washer fluid, check the freezing temperatures in the table above when adjusting the fluid concentration to the outside temperature.

If you fill the reservoir tank with a fluid with a different concentration from the one used previously, purge the old fluid from the piping between the reservoir tank and washer nozzles by operating the washer for a certain period of time. Otherwise, if the concentration of the fluid remaining in the piping is too low for the outside temperature, it may freeze and block the nozzles.

CAUTION

- **Adjust the washer fluid concentration appropriately for the outside temperature. If the concentration is inappropriate, sprayed washer fluid may freeze on the windshield and obstruct your view, and the fluid may freeze in the reservoir tank.**
- **State or local regulations on volatile organic compounds may restrict the use of methanol, a common windshield washer antifreeze additive. Washer fluids containing non-methanol antifreeze agents should be used only if they provide cold weather protection without damaging your vehicle's paint, wiper blades or washer system.**

Replacement of wiper blades

Grease, wax, insects, or other materials on the windshield or the wiper blade results in jerky wiper operation and streaking on the glass. If you cannot remove the streaks after operating the windshield washer or if the wiper operation is jerky, clean the outer surface of the windshield (or rear window) and the wiper blades using a sponge or soft cloth with a neutral detergent or mild abrasive cleaner. After cleaning, rinse the windshield and wiper blades with clean water. The windshield is clean if beads do not form when you rinse the windshield with water.

CAUTION

- **Do not clean the wiper blades with gasoline or a solvent, such as paint thinner or benzine. This will cause deterioration of the wiper blades.**
- **When you wish to raise the passenger-side wiper arm, first raise the driver-side wiper arm. Otherwise, the passenger-side wiper assembly and driver-side wiper assembly will touch each other, possibly resulting in scratches.**
- **Return the passenger-side wiper arm to its original position before returning the driver-side wiper arm to its original position. Otherwise, the passenger-side wiper assembly and driver-side wiper assembly will touch each other, possibly resulting in scratches.**
- **When returning the raised wipers to the original positions, return the wipers slowly on the windshield by hand. Returning the wipers from the detached positions by the spring operation might change the shape of the wiper arm or scratch the windshield.**

If you cannot eliminate the streaking even after following this method, replace the wiper blades using the following procedures.

– CONTINUED –

■ Windshield wiper blade assembly

NOTE

Do not lower the wiper arm while the wiper blade assembly is removed.

1. Raise the wiper arm off the windshield. First raise the driver's side wiper arm and then raise the front passenger's side wiper arm.

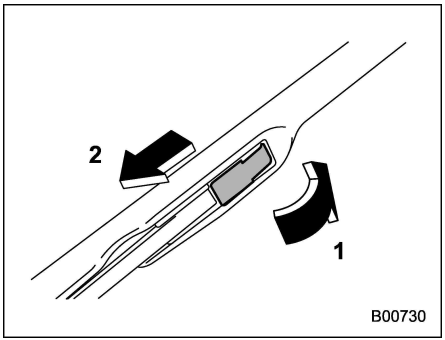

1) Open the cover
2) Pull down the wiper blade

2. Remove the wiper blade assembly by opening the cover and pulling it down in the direction shown in the illustration.
3. Install the wiper blade assembly to the wiper arm. Make sure that it locks in place.
4. Hold the wiper arm by hand and slowly lower it into position. First lower the front passenger's side wiper arm and then lower the driver's side wiper arm.

■ Windshield wiper blade rubber

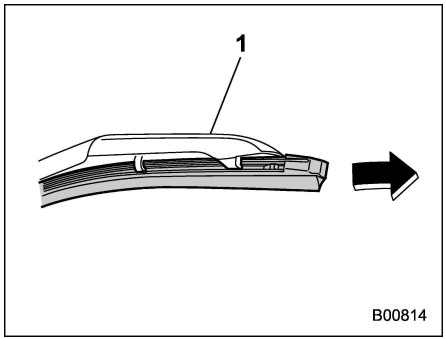

1) Support

1. Grasp the locked end of the blade rubber assembly and pull it firmly until the stoppers on the rubber are free of the support.

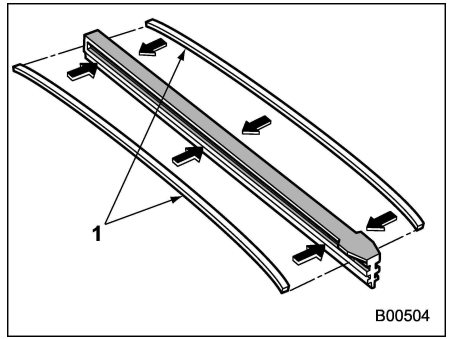

1) Metal spines

2. If the new blade rubber is not provided with two metal spines, remove the metal spines from the old blade rubber and install them in the new blade rubber.

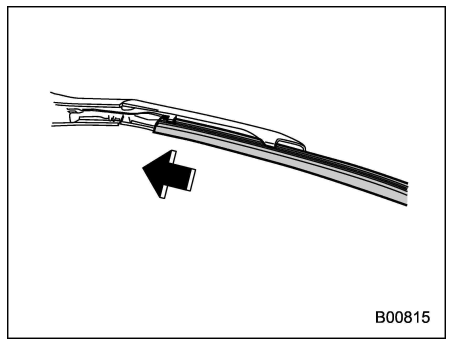

3. Align the claws of the support with the

grooves in the rubber and slide the blade rubber assembly into the support until it locks.

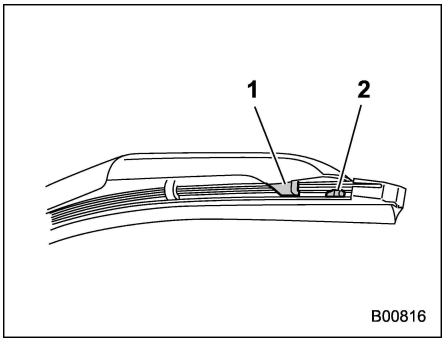

1) Claw
2) Stopper

4. Be sure to position the claws at the end of the support between the stoppers on the rubber as shown. If the rubber is not retained properly, the wiper blade may scratch the windshield.

■ Rear window wiper blade assembly (Outback)

1. Raise the wiper arm off the rear window.

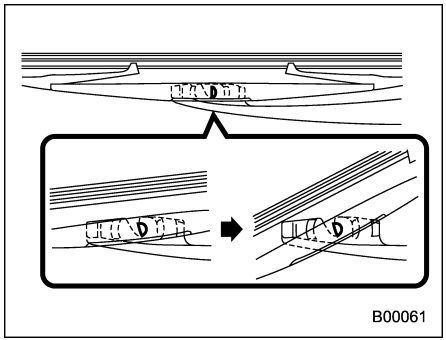

2. Turn the wiper blade assembly counterclockwise.

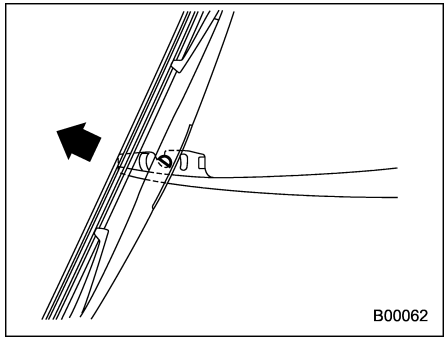

3. Pull the wiper blade assembly toward you to remove it from the wiper arm.

– CONTINUED –

■ Rear window wiper blade rubber (Outback)

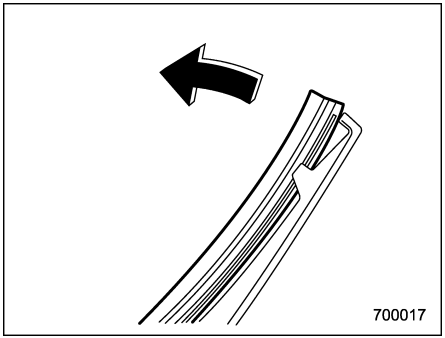

1. Pull out the end of the blade rubber assembly to unlock it from the plastic support.

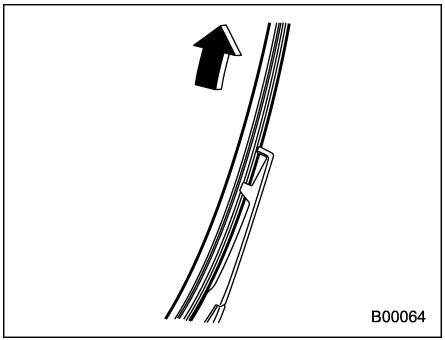

2. Pull the blade rubber assembly out of the plastic support.

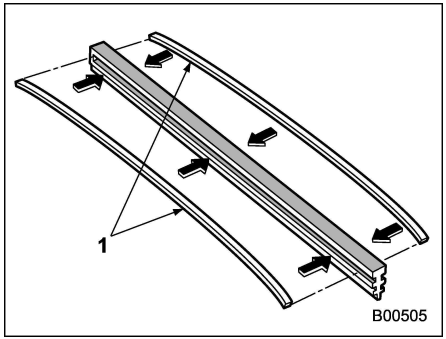

1) Metal spines

3. If the new blade rubber is not provided with two metal spines, remove the metal spines from the old blade rubber and install them in the new blade rubber.

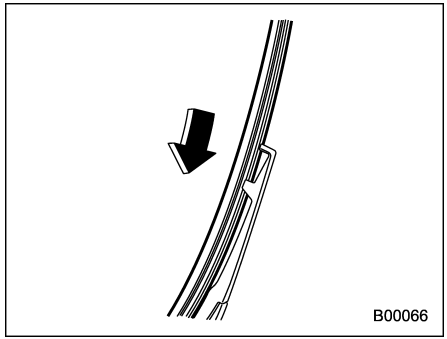

4. Align the claws of the plastic support with the grooves in the blade rubber assembly, then slide the blade rubber assembly into place.

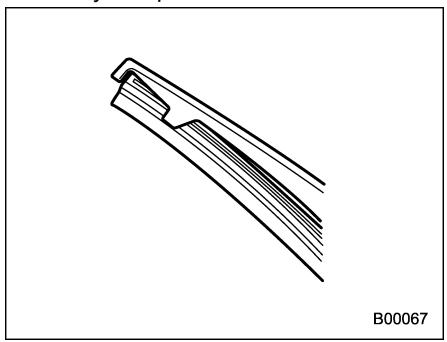

Securely retain both ends of the rubber with the stoppers on the plastic support

ends. If the rubber is not retained properly, the wiper may scratch the rear window glass.

5. Install the wiper blade assembly to the wiper arm. Make sure that it locks in place.

6. Hold the wiper arm by hand and slowly lower it in position.

Battery

WARNING

- **Before beginning work on or near any battery, be sure to extinguish all cigarettes, matches, and lighters. Never expose a battery to an open flame or electric sparks. Batteries give off a gas which is highly flammable and explosive.**
- **For safety, in case an explosion does occur, wear eye protection or shield your eyes when working near any battery. Never lean over a battery.**
- **Do not let battery fluid contact eyes, skin, fabrics, or paint because battery fluid is a corrosive acid. If battery fluid gets on your skin or in your eyes, immediately flush the area with water thoroughly. Seek medical help immediately if acid has entered the eyes.**

  If battery fluid is accidentally swallowed, immediately drink a large amount of milk or water, and seek medical attention immediately.
- **To lessen the risk of sparks, remove rings, metal watchbands, and other metal jewelry. Never allow metal tools to contact the positive battery terminal and anything connected to it WHILE you are at the same time in contact with any other metallic portion of the vehicle because a short circuit will result.**
- **Keep everyone including children away from the battery.**
- **Charge the battery in a well-ventilated area.**
- **Battery posts, terminals, and related accessories contain lead and lead compounds, chemicals known to the State of California to cause cancer and reproductive harm. Batteries also contain other chemicals known to the State of California to cause cancer. Wash hands after handling.**

– CONTINUED –

⚠ CAUTION

Never use more than 10 amperes when charging the battery because it will shorten battery life.

It is unnecessary to periodically check the battery fluid level or periodically refill with distilled water.

Fuses

⚠ CAUTION

Never replace a fuse with one having a higher rating or with material other than a fuse because serious damage or a fire could result.

The fuses are designed to melt during an overload to prevent damage to the wiring harness and electrical equipment. The fuses are located in two fuse boxes.

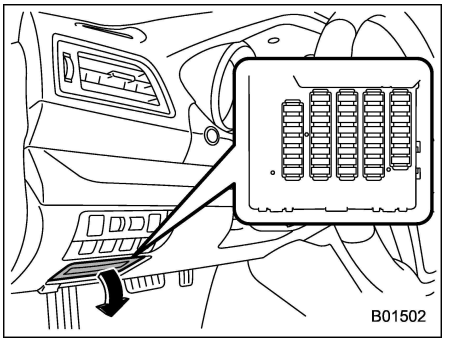

One is located under the instrument panel behind the fuse box cover on the driver's seat side. To remove the cover, pull it out.

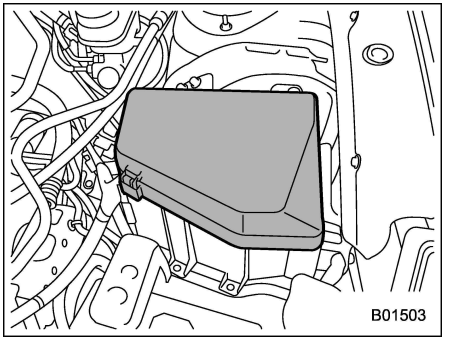

The other one (main fuse box) is housed in the engine compartment.

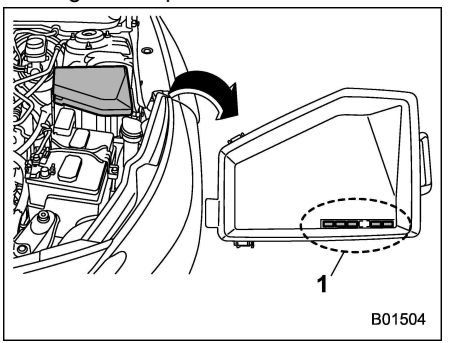

1) Spare fuses

The spare fuses are stored in the main fuse box cover in the engine compartment.

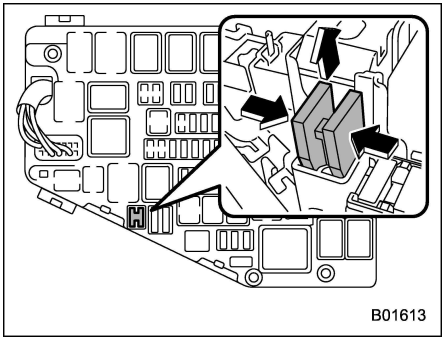

The fuse puller is stored in the main fuse box in the engine compartment. To pick up the fuse puller, pull it out while pinching the puller head with your fingers.

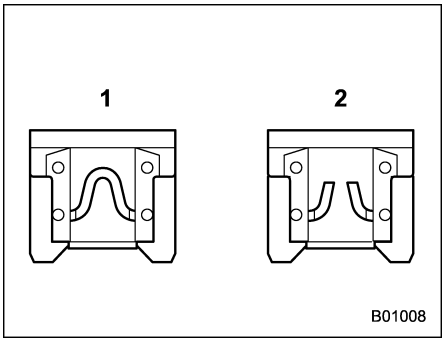

1) Good
2) Blown

If any lights, accessories or other electrical controls do not operate, inspect the corresponding fuse. If a fuse has blown, replace it.

1. Turn the ignition switch to the “LOCK”/ “OFF” position and turn off all electrical accessories.
2. Remove the fuse box cover.
3. Determine which fuse may be blown. Look at the back side of each fuse box cover and refer to “Fuses and circuits” ☞12-10.

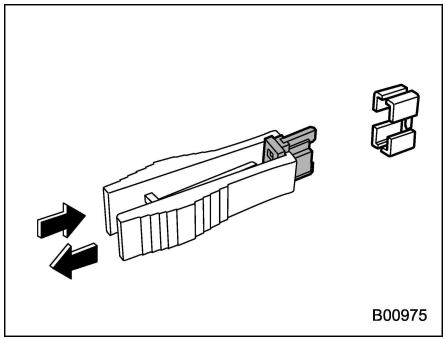

4. Pull out the fuse with the fuse puller.
5. Inspect the fuse. If it has blown, replace it with a spare fuse of the same rating.
6. If the same fuse blows again, this indicates that its system has a problem. Contact your SUBARU dealer for repairs.

Installation of accessories

Always consult your SUBARU dealer before installing fog lights or any other electrical equipment in your vehicle. Such accessories may cause the electronic system to malfunction if they are incorrectly installed or if they are not suited for the vehicle. We recommend that you install only genuine SUBARU accessories on your vehicle.

Replacing bulbs

WARNING

Bulbs may become very hot while illuminated. Before replacing bulbs, turn off the lights and wait until the bulbs cool down, Otherwise, there is the risk of sustaining a burn injury.

CAUTION

Replace any bulb only with a new bulb of the specified wattage. Using a bulb of different wattage could result in a fire. For the specified wattage of each bulb, refer to "Bulb chart" ☞12-14. For replacement, contact your SUBARU dealer.

■ Headlights (models with LED headlights)

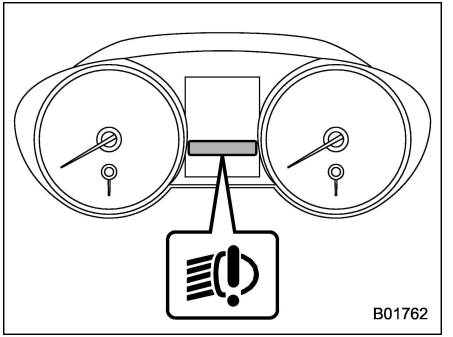

The LED headlight warning light illuminates if the LED headlights malfunction.

Have your vehicle inspected at a SUBARU dealer as soon as possible.

■ Headlights (models with halogen headlights)

CAUTION

Halogen headlight bulbs become very hot while in use. If you touch the bulb surface with bare hands or greasy gloves, fingerprints or grease on the bulb surface will develop into hot spots, causing the bulb to break. If there are finger

prints or grease on the bulb surface, wipe them away with a soft cloth moistened with alcohol.

NOTE

- **If headlight aiming is required, consult your SUBARU dealer for proper adjustment of the headlight aim.**
- **It may be difficult to replace the bulbs. Have the bulbs replaced by your SUBARU dealer if necessary.**

Perform the following steps to replace the bulbs.

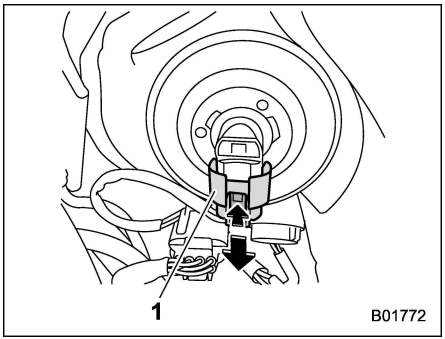

Low beam headlight (if equipped)
1) Electrical connector

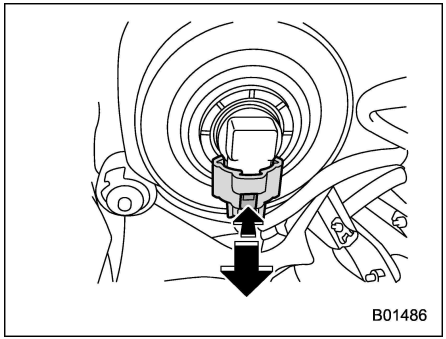

High beam headlight

1. Disconnect the electrical connector from the bulb.

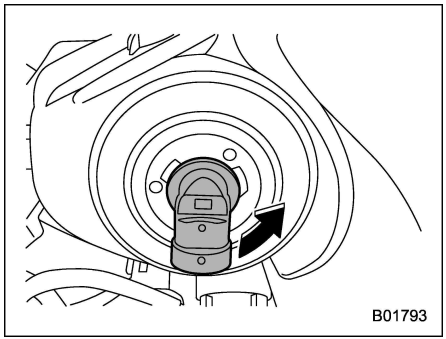

Low beam headlight (if equipped)

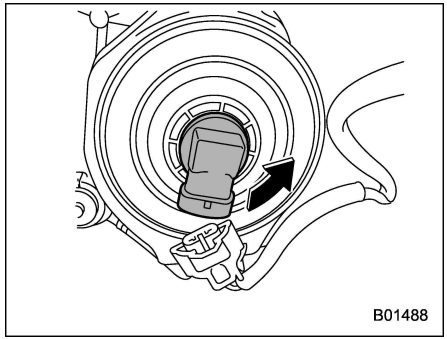

High beam headlight

2. Remove the bulb from the headlight assembly by turning it counterclockwise.
3. Replace the bulb with new one. At this time, use care not to touch the bulb surface.
4. To install the bulb to the headlight assembly, turn it clockwise until it clicks.
5. Reconnect the electrical connector.

– CONTINUED –

■ Front turn signal light

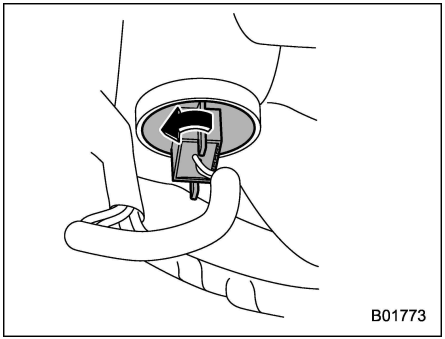

1. Turn the socket counterclockwise and pull it out.
2. Pull out the bulb from the socket and replace the bulb with a new one.

■ Front fog light (Outback - if equipped)

NOTE

It may be difficult to replace the bulbs. We recommend that you have the bulbs replaced by your SUBARU dealer if necessary.

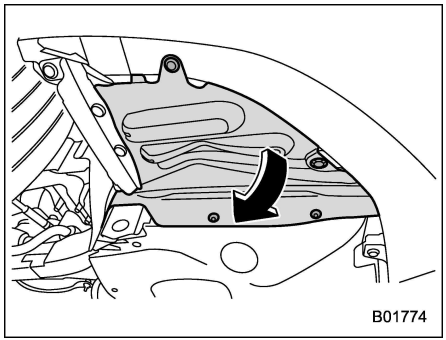

1. Remove the clips.
2. Turn over the mud guard.
3. Disconnect the electrical connector.

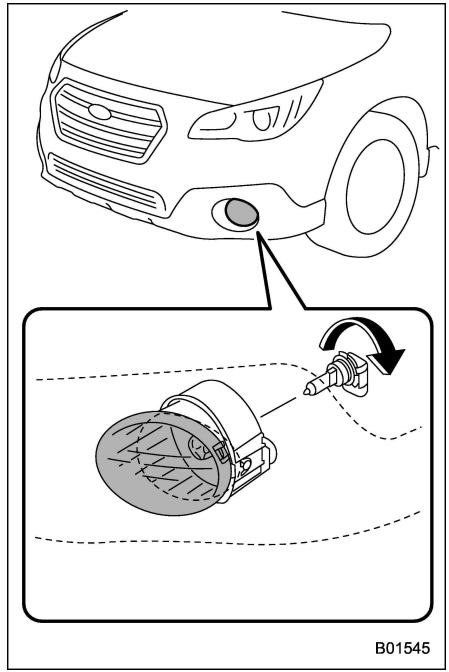

4. Remove the bulb.
5. Replace the bulb with a new one.
6. After replacing the bulb, reattach the mud guard.

■ Rear combination lights

▼ Legacy

NOTE

It may be difficult to replace the bulbs. We recommend that you have the bulbs replaced by your SUBARU dealer if necessary.

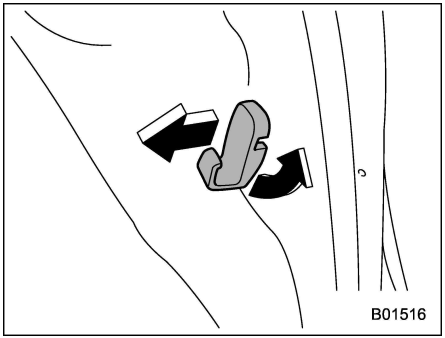

1. Turn the shopping bag hook 90 degrees counterclockwise and pull it out.

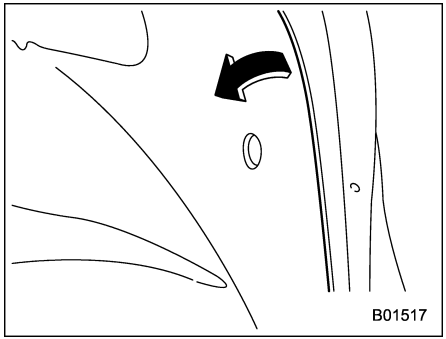

2. Turn over the trunk trim panel.

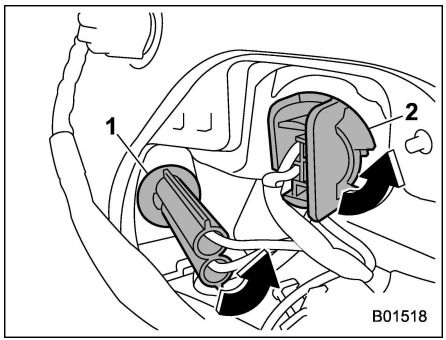

1) Rear side marker light
2) Rear turn signal light

3. Remove the bulb holder from the rear combination light assembly by turning it counterclockwise. Use pliers if necessary.

4. Pull the bulb out of the bulb holder and replace it with a new one.
5. Set the bulb holder into the rear combination light assembly and turn it clockwise until it locks.
6. Securely reposition the trunk trim panel.
7. Reattach the shopping bag hook.

▼ Outback

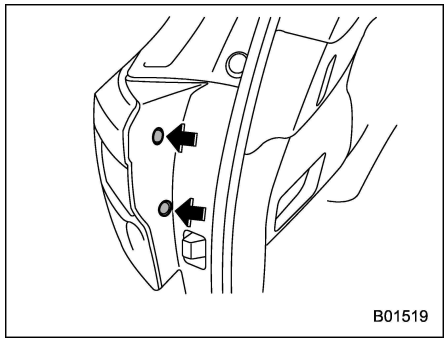

1. Undo the clips. For the method to undo the clips, refer to “Type C clips” ☞11-6.

– CONTINUED –

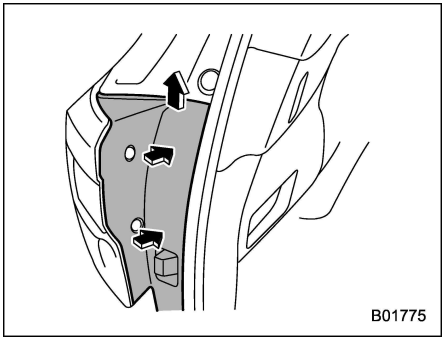

2. Remove the cover.

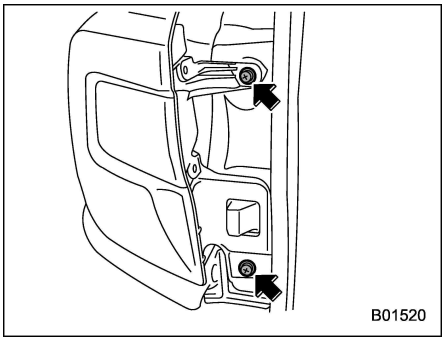

3. Remove the upper and lower screws.

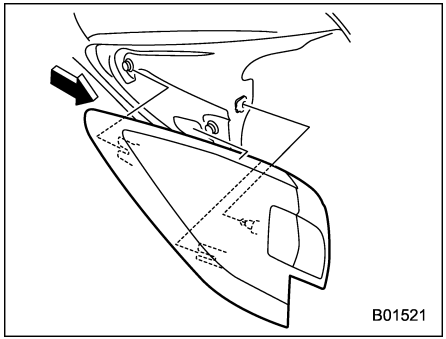

4. Slide the rear combination light assembly straight rearward and remove it from the vehicle.

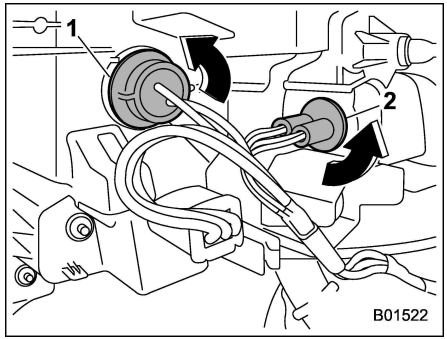

1) Rear turn signal light
2) Rear side marker light

5. Remove the bulb holder from the rear combination light assembly by turning it counterclockwise.

6. Pull the bulb out of the bulb holder and replace it with a new one.

7. Set the bulb holder into the rear combination light assembly and turn it clockwise until it locks.

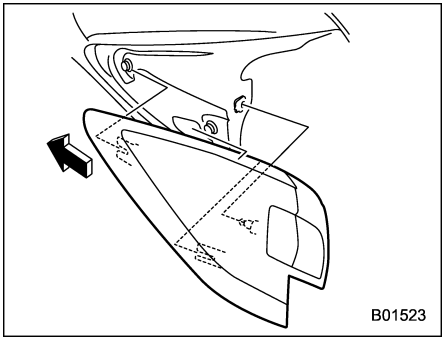

8. Reinstall the rear combination light assembly by sliding the two-pronged part of the combination light assembly securely to each holder of the vehicle side.

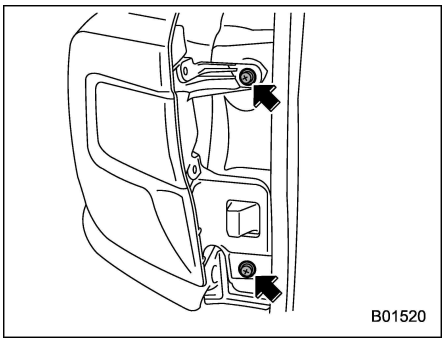

9. Tighten the upper and lower screws.
10. Reinstall the side cover.

■ Backup light

▼ Legacy

NOTE

It may be difficult to replace the bulbs. We recommend that you have the bulbs replaced by your SUBARU dealer if necessary.

1. Open the trunk.

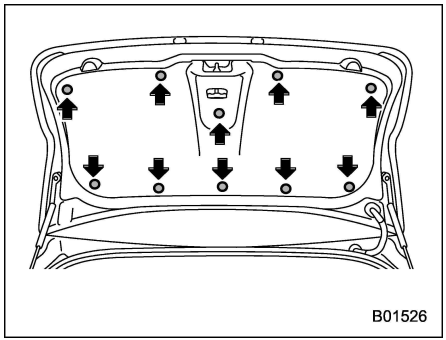

2. Remove the trunk trim lining by removing the clips indicated in the illustration.

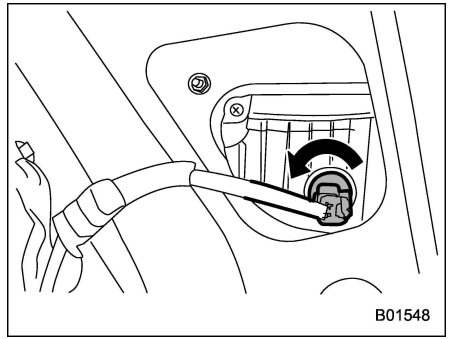

3. Turn the bulb socket counterclockwise and remove it.
4. Pull the bulb out of the bulb socket and replace it with a new one.
5. Install the bulb socket by turning it clockwise.
6. Reconnect the electrical connector.
7. Reinstall the trunk trim lining.

– CONTINUED –

▼ **Outback**

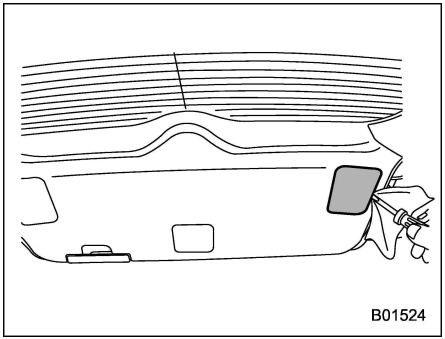

1. Apply a flat-head screwdriver to the light cover as shown in the illustration, and pry the light cover off from the rear gate trim.

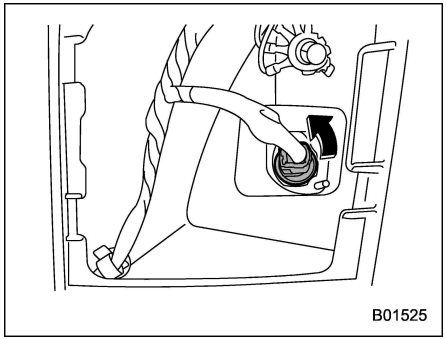

2. Turn the bulb socket counterclockwise and remove it.

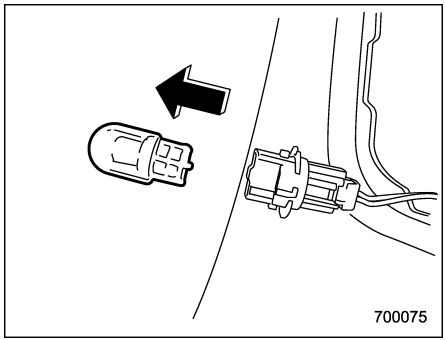

3. Pull the bulb out of the bulb socket and replace it with a new one.
4. Install the bulb socket by turning it clockwise.
5. Install the light cover on the rear gate.

■ License plate light

▼ **Legacy**

NOTE

It may be difficult to replace the bulbs. We recommend that you have the bulbs replaced by your SUBARU dealer if necessary.

1. Open the trunk.

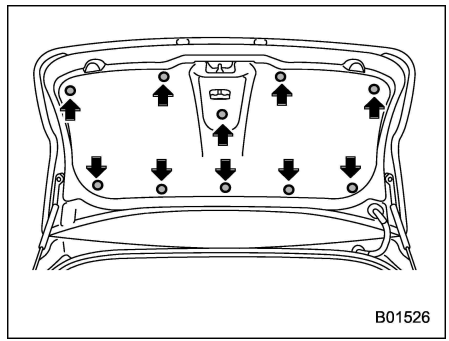

2. Remove the trunk trim lining by removing the clips indicated in the illustration.

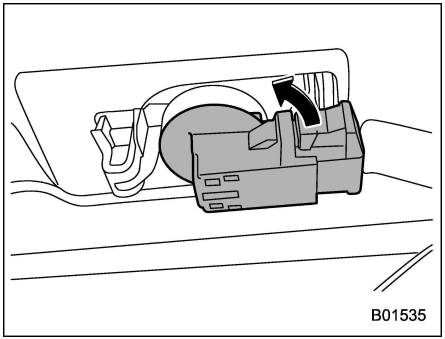

3. Turn the bulb socket counterclockwise and remove it.
4. Pull the bulb out of the bulb socket and replace it with a new one.
5. Install the bulb socket by turning it clockwise.
6. Reconnect the electrical connector.
7. Reinstall the trunk trim lining.

▼ **Outback**

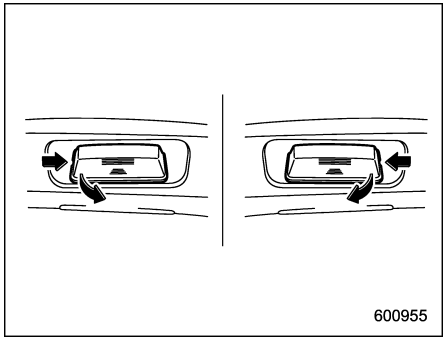

1. The license plate light must be pushed inwards, and then pulled out to be removed.

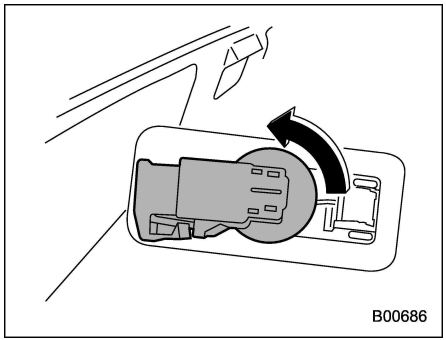

2. Turn the bulb socket counterclockwise and pull out the socket.
3. Pull the bulb out of the socket.
4. Install a new bulb.
5. Reinstall the bulb socket and the license plate light cover.

■ Dome light

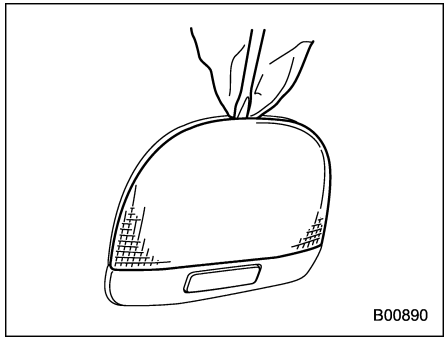

1. Remove the lens by prying the edge of the lens with a flat-head screwdriver.

– CONTINUED –

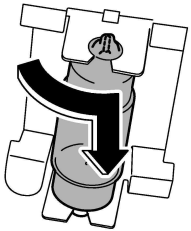

2. Turn the bulb until the flat surfaces at its ends are aligned vertically.
3. Pull the bulb straight downward to remove it.
4. Install a new bulb.
5. Reinstall the lens.

■ Map light

⚠ CAUTION

Replacing the bulb could cause burns since the bulb may be very hot. Have the bulb replaced by your SUBARU dealer.

■ Door step light

⚠ CAUTION

Replacing the bulb could cause a short circuit. Have the bulb replaced by your SUBARU dealer.

■ Cargo area light (Outback)

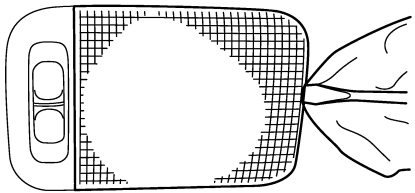

1. Remove the lens by prying the edge of the lens with a flat-head screwdriver.

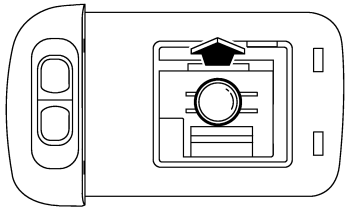

2. Pull the bulb out of the socket.
3. Install a new bulb.
4. Reinstall the lens.

■ Trunk light (Legacy)

⚠ CAUTION

Replacing the bulb could cause burns since the bulb may be very hot. Have the bulb replaced by your SUBARU dealer.

■ Other bulbs

It may be difficult to replace the bulbs. We recommend that you have the bulbs replaced by your SUBARU dealer if necessary.

Replacing battery

The access key fob / transmitter battery may be discharged under the following conditions.

- The operation of the keyless access function is unstable
- The operating distance of the remote keyless entry system is unstable
- The transmitter does not operate properly when used within the standard distance

Replace the battery with a new one.

⚠ CAUTION

- **Do not let dust, oil or water get on or in the access key fob/transmitter when replacing battery.**
- **Be careful not to damage the printed circuit board in the access key fob/transmitter when replacing the battery.**
- **Be careful not to allow children to touch the battery and any removed parts; children could swallow them.**
- **There is a danger of an explosion if the battery is incorrectly replaced. Replace only with the same or equivalent type of the battery.**
- **Batteries shall not be exposed to excessive heat such as bright sunlight, fire or the like.**

NOTE

- **Replace only with the same or equivalent type of battery recommended by the manufacturer.**
- **Dispose of used batteries according to the local laws.**
- **Mount the battery in the correct orientation to prevent fluid leakage. Be careful not to bend the terminals. It may result in a malfunction.**
- **It is recommended that the battery should be replaced by a SUBARU dealer.**
- **Use a new battery.**
- **After replacing the battery, confirm that the access key fob/transmitter functions properly.**

– CONTINUED –

■ Replacing battery of access key fob

⚠ CAUTION

- **When removing or fitting the access key fob cover, make sure that the plastic part does not come off or become misaligned.**
- **Before replacing the battery, remove any static electricity.**

Battery: Button battery CR2032

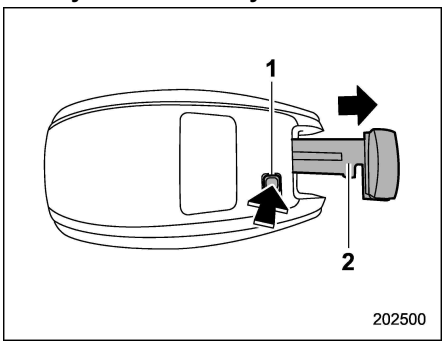

1) Release button
2) Emergency key

1. Take out the emergency key.

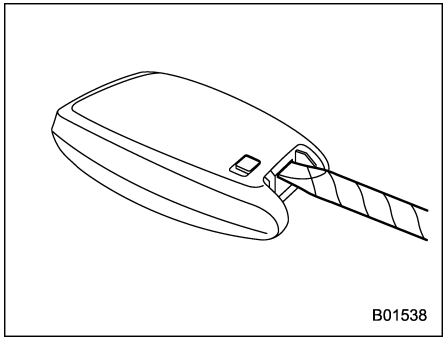

2. Wrap a flat-head screwdriver with vinyl tape or a cloth, and insert it in the gap to remove the cover.

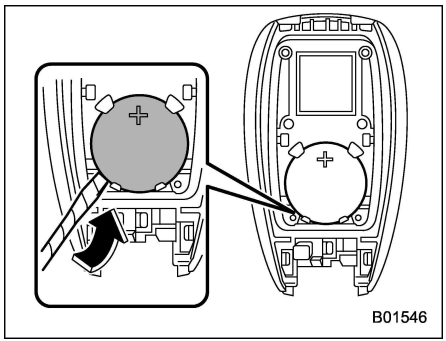

3. Take out the battery using a flat-head screwdriver with vinyl tape or a cloth.

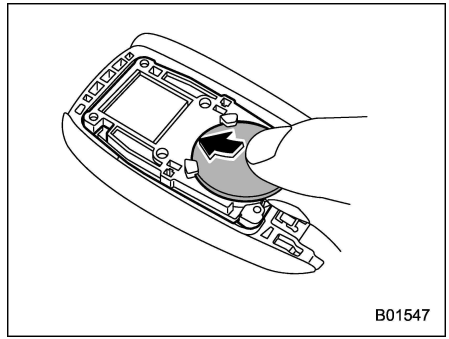

4. Insert a new battery with its positive (+) side facing upward as shown in the figure.

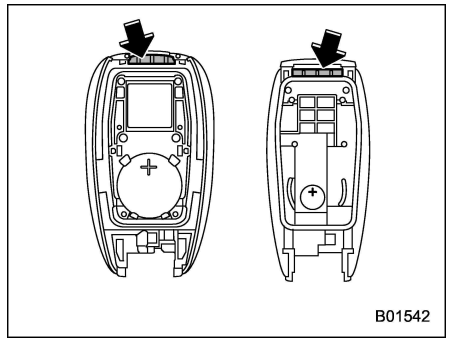

5. Attach the cover to the access key fob by fitting the projections and recesses together.

■ Replacing battery of transmitter

⚠ CAUTION

Before replacing the battery, remove any static electricity.

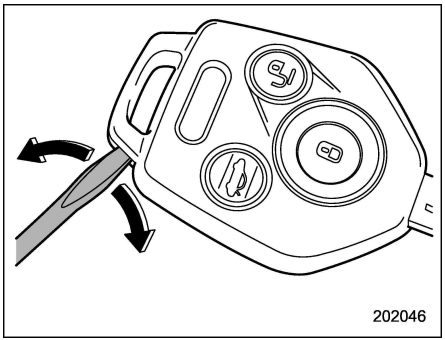

1. Open the key head using a flat-head screwdriver.

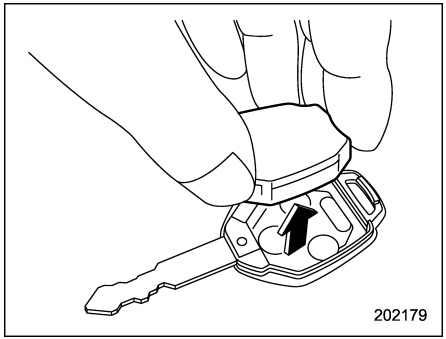

2. Remove the transmitter case from the key head.

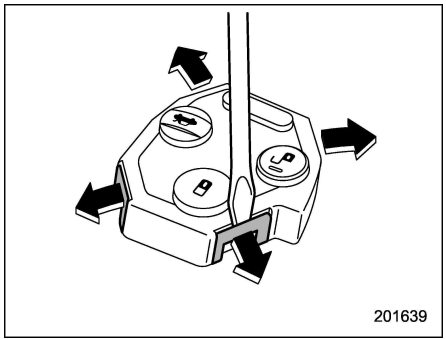

3. Open the transmitter case by releasing the hooks.

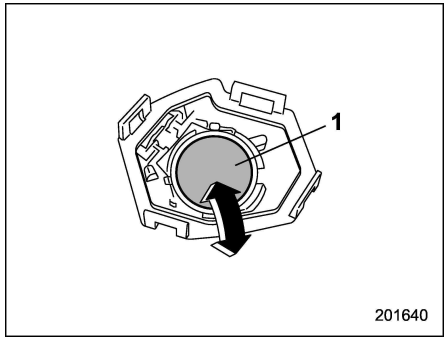

1) Negative (−) side facing up

4. Replace the old battery with a new battery (Type **CR1620** or equivalent) making sure to install the new battery with the negative (−) side facing up.
5. Put together the transmitter case by fitting the hooks on the case.
6. Reinstall the transmitter case in the key head.
7. Refit the removed half of the key head.

After the battery is replaced, the transmitter must be synchronized with the remote keyless entry system's control unit. Press either the "🔒" or "🔓" button six times to synchronize the unit.

Specifications 12-2
Dimensions 12-2
Engine 12-3
Fuel 12-3
Engine oil 12-4
Front differential and rear differential gear oil 12-7
Fluids 12-8
Engine coolant 12-8
Electrical system 12-9
Tires 12-9
Brake disc 12-9
Fuses and circuits 12-10
Fuse panel located in the passenger compartment 12-10
Fuse panel located in the engine compartment 12-12
Bulb chart 12-14
Safety precautions 12-14
Bulb chart 12-15
Vehicle identification 12-18

Specifications

These specifications are subject to change without notice.

■ Dimensions

in (mm)

Item		Legacy		Outback	
		2.5 L	3.6 L	2.5 L	3.6 L
Drive system		AWD			
Transmission type		CVT			
Overall length		189.1 (4,802)		189.9 (4,824)	
Overall width		72.4 (1,840)		72.4 (1,840)	
Overall height		59.0 (1,500)		66.1 (1,680)*2 65.2 (1,655)*3 64.0 (1,625)*4	
Wheelbase		108.3 (2,750)		108.1 (2,745)	
Tread	Front	62.2 (1,580)		61.8 (1,570)	
	Rear	62.8 (1,595)		62.2 (1,580)	
Ground clearance*1		5.9 (150)		8.7 (220)	

*1: Measured with vehicle empty
*2: Models with high profile roof rails
*3: Models with low profile roof rails (U.S.-spec. models)
*4: Models with low profile roof rails (except U.S.-spec. models)
CVT: Continuously variable transmission
AWD: All-Wheel Drive

■ Engine

Engine model	FB25 (2.5 L, DOHC, non-turbo)	EZ36 (3.6 L, DOHC, non-turbo)
Engine type	Horizontally opposed, liquid cooled 4 cylinder, 4 stroke gasoline engine	Horizontally opposed, liquid cooled 6 cylinder, 4 stroke gasoline engine
Displacement cu-in (cc)	152 (2,498)	221.5 (3,630)
Bore × Stroke in (mm)	3.70 × 3.54 (94.0 × 90.0)	3.62 × 3.58 (92.0 × 91.0)
Compression ratio	10.3 : 1	10.5 : 1
Firing order	1 – 3 – 2 – 4	1 – 6 – 3 – 2 – 5 – 4

■ Fuel

Fuel requirement	Fuel tank capacity
Unleaded gasoline with **87 AKI (90 RON) or higher**	18.5 US gal (70 liters, 15.4 Imp gal)

– CONTINUED –

■ Engine oil

For the checking, adding and replacing procedure or other details, refer to “Engine oil” ☞11-11.

NOTE

The procedure for changing the engine oil and oil filter should be performed by a properly-trained expert. It is recommended that you have this service performed by your SUBARU dealer.

▼ Approved engine oil

Always use the SUBARU approved engine oil. For further details, please contact your SUBARU dealer.
If the approved engine oil is unavailable, use the alternative engine oil described on the next page.

▼ Alternative engine oil

If the SUBARU approved oil is unavailable, the following alternative oil can be used.

NOTE

- **Each quantity indicated is only a guideline. The necessary quantity for replacement may differ slightly depending on the temperature and other factors.**
- **In choosing an oil, you want the proper quality and viscosity, as well as one that will enhance fuel economy. Oils of lower viscosity provide better fuel economy. However, in hot weather, oil of higher viscosity is required to properly lubricate the engine. The following table lists the recommended viscosities and applicable temperatures.**
- **When adding oil, different brands may be used together as long as they are the same API classification and SAE viscosity as those recommended by SUBARU.**

▽ **2.5 L models**

Oil grade	SAE viscosity No. and applicable temperature	Engine oil capacity
API SERVICE SN SAE XW-XX RESOURCE CONSERVING ZOM0377 API (American Petroleum Institute) classification **SN** with the words “RESOURCE CONSERVING” **or** AMERICAN PETROLEUM INSTITUTE FOR GASOLINE ENGINES CERTIFIED ZOM0293 ILSAC (International Lubricant Specification Advisory Committee) **GF-5**, which can be identified with the ILSAC certification mark (Starburst mark)	**0W-20 synthetic** oil is the required oil for optimum engine performance and protection. Conventional oil may be used if synthetic oil is unavailable. *: If 0W-20 synthetic oil is not available, 5W-30 or 5W-40 conventional oil may be used if you need to add oil. However, you should change to 0W-20 synthetic oil at the next oil change. °C -30 -20 -10 0 10 20 30 40 °F -20 0 20 40 60 80 100 0W-20* ZOM0294	– Adding the oil from low level to full level: 1.1 US qt (1.0 liter, 0.9 Imp qt) – Changing the oil and oil filter: 5.1 US qt (4.8 liters, 4.2 Imp qt)

– CONTINUED –

▽ 3.6 L models

Oil grade	SAE viscosity No. and applicable temperature	Engine oil capacity
ZOM0377 API (American Petroleum Institute) classification **SN** with the words “RESOURCE CONSERVING” **or** 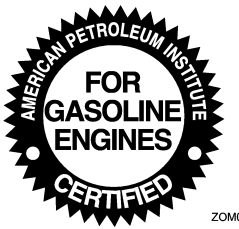 ZOM0293 ILSAC (International Lubricant Specification Advisory Committee) **GF-5**, which can be identified with the ILSAC certification mark (Starburst mark)	Your vehicle is designed to use **5W-30** conventional motor oil, however 5W-30 synthetic may be used for optimum engine performance. *: If 5W-30 synthetic oil is not available, 10W-30 or 10W-40 conventional oil may be used if you need to add oil. However, you should change to 5W-30 synthetic or conventional oil at the next oil change. 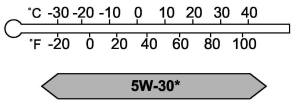 ZOM0296	– Adding the oil from L to F level: 1.1 US qt (1.0 liter, 0.9 Imp qt) – Changing the oil and oil filter: 6.9 US qt (6.5 liters, 5.7 Imp qt)

■ Front differential and rear differential gear oil

Oil	Front differential gear oil	Rear differential gear oil
Oil grade	● SUBARU Extra MT*3 ● API classification GL-5 (75W-90)*4	2.5 L models: SUBARU Extra MT*3 or API classification GL-5 (75W-90*4) 3.6 L models: API classification GL-5 (75W-90*3 or 90*4)
SAE viscosity No. and applicable temperature	—	● 75W-90* ● 90 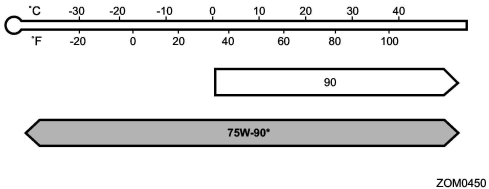 *: Recommended
Oil capacity*1	2.5 L models: 1.3 US qt (1.2 liters, 1.1 Imp qt) 3.6 L models: 1.5 US qt (1.4 liters, 1.2 Imp qt)	0.8 US qt (0.8 liters, 0.7 Imp qt)
Remarks*2	"Front differential gear oil and rear differential gear oil" ☞11-19	"Front differential gear oil and rear differential gear oil" ☞11-19

*1: The indicated oil quantity is only a guideline. The necessary quantity for replacement may differ slightly depending on the temperature and other factors. After refilling the gearbox with oil, the oil level should be checked.
*2: For more details about maintenance and service, refer to the indicated section.
*3: The vehicle is filled at the factory with this type of differential gear oil.
*4: You may use this type of differential gear oil. However, using this type of oil will detract from fuel efficiency.

– CONTINUED –

■ Fluids

Fluid	Fluid type*1	Fluid capacity*2	Remarks*3
Continuously variable transmission fluid	Consult your SUBARU dealer.	2.5 L models: · Legacy: 11.9 US qt (11.3 liters, 9.9 Imp qt) · Outback: 12.4 US qt (11.7 liters, 10.3 Imp qt) 3.6 L models: 13.4 US qt (12.7 liters, 11.2 Imp qt)	"Continuously variable transmission fluid" ☞11-19
Brake fluid	FMVSS No. 116, DOT 3 or DOT 4 brake fluid	–	"Brake fluid" ☞11-19

*1: Use one of the indicated types of fluid.
*2: The indicated fluid quantity is only a guideline. The necessary quantity for replacement may differ slightly depending on the temperature and other factors.
*3: For more details about maintenance and service, refer to the indicated section.

■ Engine coolant

Vehicle model	Coolant capacity	Coolant type
2.5 L models	8.2 US qt (7.8 liters, 6.9 Imp qt)	SUBARU Super Coolant
3.6 L models	7.4 US qt (7.0 liters, 6.2 Imp qt)	

The indicated coolant quantity is only a guideline. The necessary quantity for replacement may differ slightly depending on the temperature and other factors. For more details about maintenance and service, refer to "Cooling system" ☞11-14.

■ Electrical system

Battery type		75D23R
Alternator		2.5 L models: 12V-150A 3.6 L models: 12V-130A
Spark plugs	2.5 L models	SILZKAR7B11 (NGK)
	3.6 L models	SILFR6C11 (NGK)

■ Tires

Item		Legacy		Outback	
Tire size		225/55R17 97V	225/50R18 95H	225/65R17 102H	225/60R18 100H
Wheel size		17 × 7J 17 × 7 1/2J	18 × 7 1/2J	17 × 7J	18 × 7J
Pressure	Front	33 psi (230 kPa, 2.3 kgf/cm^2)		35 psi (240 kPa, 2.4 kgf/cm^2)	
	Rear	32 psi (220 kPa, 2.2 kgf/cm^2)		33 psi (230 kPa, 2.3 kgf/cm^2)	
Temporary spare tire	Size	T155/70 D17 110M		T155/80 R17 101M	
	Pressure	60 psi (420 kPa, 4.2 kgf/cm^2)			
Wheel nut tightening torque		88.5 lbf·ft (120 N·m, 12.2 kgf·m)*1			

*1: This torque is equivalent to applying approximately 88 to 110 lbf (40 to 50 kgf) at the end of the wheel nut wrench. If you have tightened the wheel nuts by yourself, have the tightening torque checked at the nearest automotive service facility as soon as possible. For the wheel nut tightening procedure, refer to “Changing a flat tire” ☞9-5.

■ Brake disc

If you need information on the usage limit value of brake discs and the method for measuring them, consult your SUBARU dealer.

Fuses and circuits

■ Fuse panel located in the passenger compartment

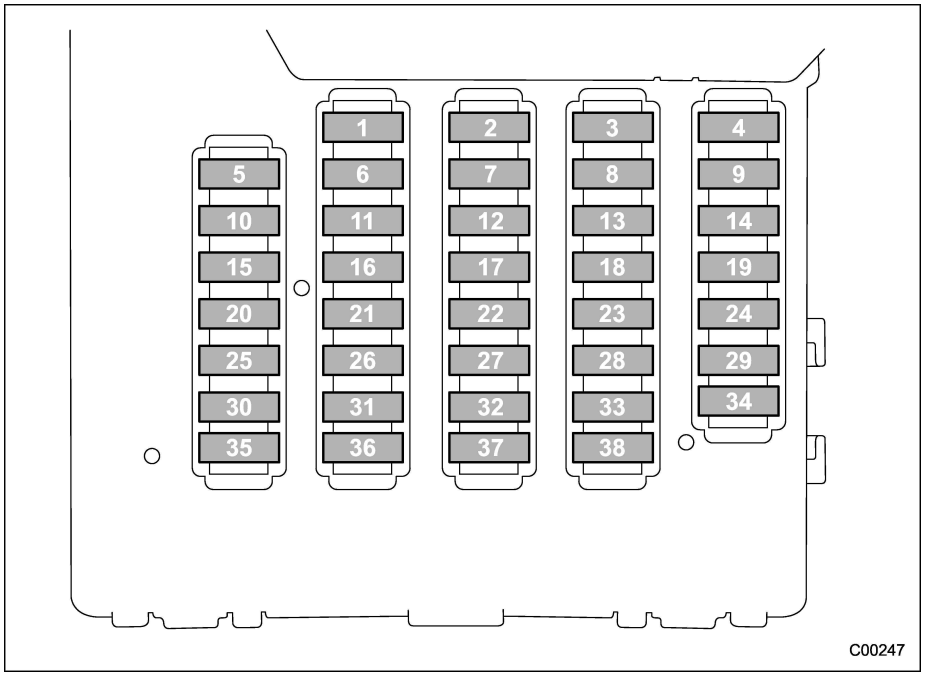

Fuse panel	Fuse rating	Circuit
1	7.5A	START1
2	20A	12V SOCKET
3	7.5A	IG1-1
4	15A	AUDIO NAVI
5	15A	UNIT IG2-2
6	20A	P/W R.LH
7	10A	CIGAR
8	15A	A/C IG
9	7.5A	ACC
10	7.5A	UNIT IG2-1
11	30A	P/W MAIN1
12	7.5A	START2
13	Empty	
14	7.5A	UNIT+B
15	7.5A	METER IG
16	20A	P/W R.RH
17	7.5A	MIR
18	7.5A	LAMP IG
19	7.5A	IG1-2
20	10A	SRS AIR BAG
21	20A	P/W PASS1
22	15A	SEAT HTR R

Fuse panel	Fuse rating	Circuit
23	10A	DRL
24	20A	P/W MAIN2
25	Empty	
26	10A	BACK UP
27	15A	WIPER DEICER
28	20A	TRAIL R.FOG
29	20A	P/W PASS2
30	Empty	
31	7.5A	SMT
32	15A	SEAT HTR F
33	7.5A	KEY SW
34	7.5A	P/W ALL
35	20A	SUN ROOF
36	Empty	
37	7.5A	STOP
38	7.5A	EYE SIGHT

– CONTINUED –

■ Fuse panel located in the engine compartment

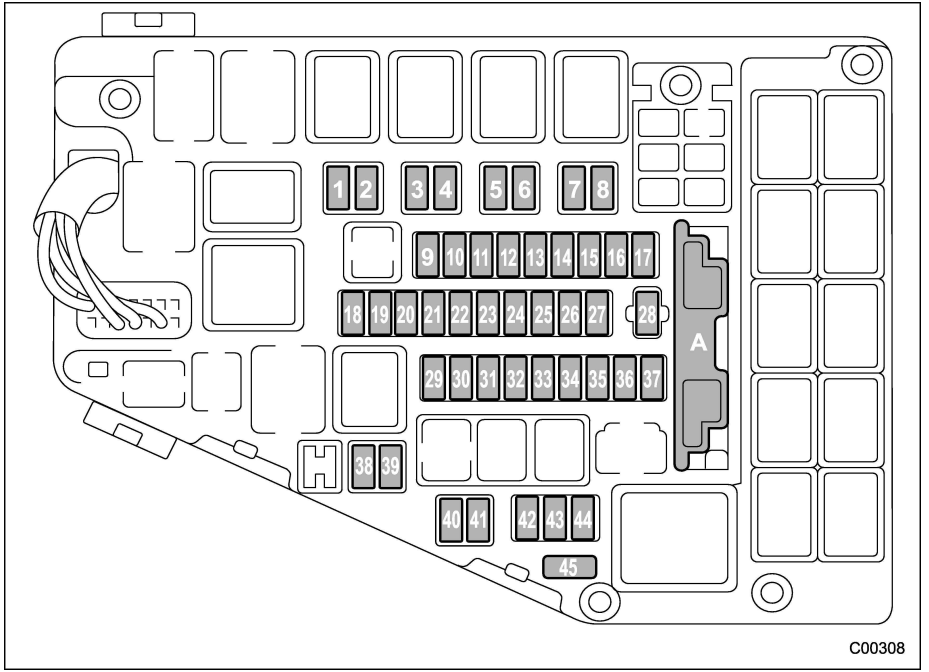

A) Main fuse

Fuse panel	Fuse rating	Circuit
1	7.5A	HORN RH
2	7.5A	HORN LH
3	10A	ILLUMI
4	10A	TAIL
5	15A	H/L LO RH
6	15A	H/L LO LH
7	10A	H/L HI RH
8	10A	H/L HI LH
9	7.5A	DCM
10	15A	D/L
11	Empty	
12	Empty[*1] 7.5A	 ALT-S[*2]
13	20A	FUEL
14	15A	HAZARD
15	30A	IG2
16	7.5A	PU B/UP
17	7.5A	OBD
18	Empty	
19	Empty	

Fuse panel	Fuse rating	Circuit
20	20A*1 25A*2	O2 HTR
21	15A	E/G2
22	15A	ETC
23	15A	E/G1
24	15A	AVCS
25	15A	INJ
26	7.5A	CVT SSR
27	20A	TCU
28	Empty	
29	30A	BACKUP
30	7.5A Empty*2	ACTGS*1
31	25A Empty*2	SUB FAN*1
32	25A Empty*2	MAIN FAN*1
33	30A	ABS SOL
34	20A	AUDIO
35	25A	R.DEF
36	15A	BLOWER
37	15A	BLOWER
38	10A	F.FOG RH
39	10A	F.FOG LH

Fuse panel	Fuse rating	Circuit
40	Empty	
41	15A	STRG/H
42	15A	R.WIPER
43	15A	F.WASH
44	30A	F.WIPER
45	Empty	

*1: 2.5 L models
*2: 3.6 L models

Bulb chart

■ Safety precautions

⚠ WARNING

Bulbs may become very hot while illuminated. Before replacing bulbs, turn off the lights and wait until the bulbs cool down. Otherwise, there is a risk of sustaining a burn injury.

⚠ CAUTION

Replace any bulb only with a new bulb of the specified wattage. Using a bulb of different wattage could result in a fire.

■ Bulb chart

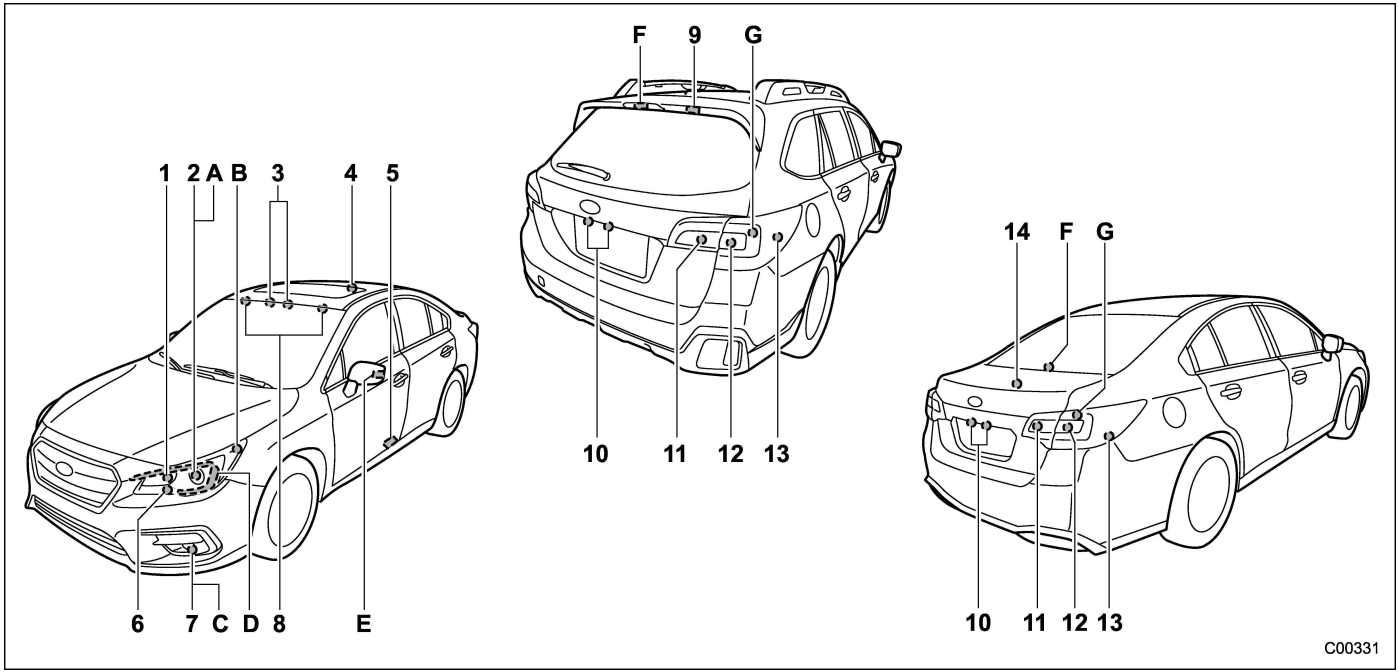

NOTE

Lights A, B, C, D, E, F, and G are the LED (Light Emitting Diode) type. Consult your SUBARU dealer for replacement.

– CONTINUED –

		Wattage	Bulb No.
1)	High beam headlights (models with halogen headlights)	12V-60W	HB3
	Front turn signal lights (models with LED headlights)	12V-28W	7444NA
2)	Low beam headlights (models with halogen headlights)	12V-55W	H11
3)	Map lights	12V-8W	
4)	Dome light	12V-8W	
5)	Door step lights	12V-5W	W5W
6)	Front turn signal light (models with halogen headlights)	12V-28W	7444NA
7)	Front fog lights (Outback - if equipped)	12V-55W	H11
8)	Vanity mirror lights	14V-1.4W	HTU
9)	Cargo area lights	12V-13W	SAE #912
10)	Licence plate lights	12V-5W	W5W
11)	Backup lights	12V-16W	W16W
12)	Rear turn signal lights	12V-21W	WY21W
13)	Rear side marker lights	12V-5W	W5W
14)	Trunk lights	12V-3.8W	SAE #194

		Wattage	Bulb No.
A)	Low and high beam headlights (models with LED headlights)	–	–
B)	Front side marker lights	–	–
C)	Front fog lights (Legacy - if equipped)	–	–
D)	Parking lights/Daytime running lights	–	–
E)	Side turn signal lights (if equipped)	–	–
F)	High-mounted stop lights	–	–
G)	Tail and stop lights	–	–

Vehicle identification

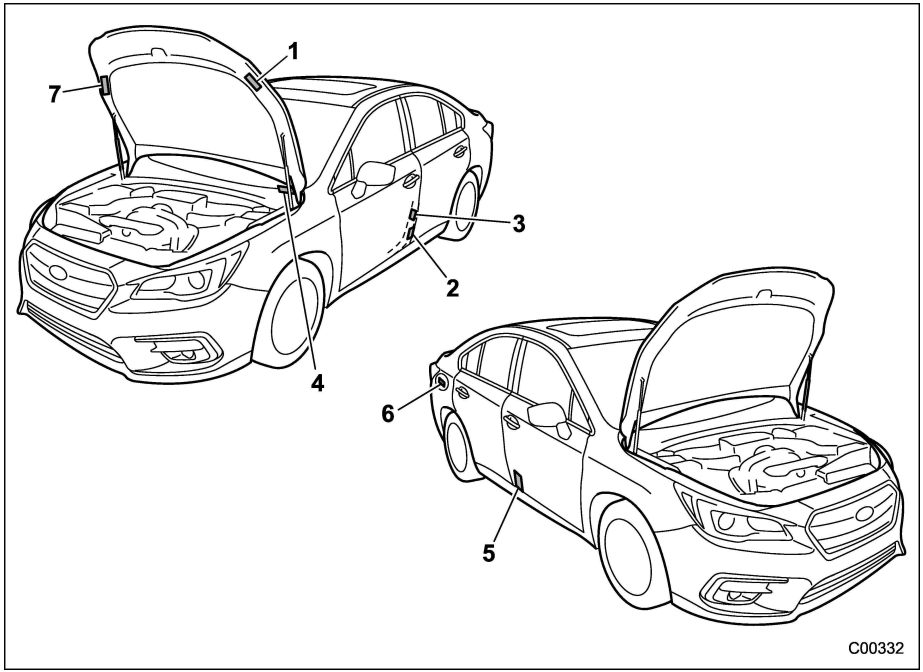

1) Emission control label
2) Certification and bar code label
3) Tire inflation pressure label (tire placard)
4) Vehicle identification number plate
5) Model number label
6) Fuel label
7) Air conditioner label

Consumer information and Reporting safety defects

For U.S.A. 13-2
Tire information..... 13-2
Tire labeling..... 13-2
Recommended tire inflation pressure 13-4
Glossary of tire terminology..... 13-5
Tire care – maintenance and safety practices 13-9
Vehicle load limit – how to determine 13-10
Determining compatibility of tire and vehicle load capacities 13-13
Adverse safety consequences of overloading on handling and stopping and on tires..... 13-13
Steps for Determining Correct Load Limit 13-14
Uniform tire quality grading standards..... 13-14
Treadwear..... 13-15
Traction AA, A, B, C..... 13-15
Temperature A, B, C 13-15
Reporting safety defects (USA)..... 13-16

For U.S.A.

The following information has been compiled according to Code of Federal Regulations “Title 49, Part 575”.

Tire information

■ Tire labeling

Many markings (e.g. Tire size, Tire Identification Number or TIN) are placed on the sidewall of a tire by tire manufacturers. These marking can provide you with useful information on the tire.

▼ Tire size

Your vehicle comes equipped with P-Metric tire size. It is important to understand the sizing system in selecting the proper tire for your vehicles. Here is a brief review of the tire sizing system with a breakdown of its individual elements.

▽ P Metric

With the P-Metric system, Section Width is measured in millimeters. To convert millimeters into inches, divide by 25.4. The Aspect Ratio (Section Height divided by Section Width) helps provide more dimensional information about the tire size.

Example:

P	205	/	60	R	16
(1)	(2)		(3)	(4)	(5)

(1) P = Certain tire type used on light duty vehicles such as passenger cars

(2) Section Width in millimeters

(3) Aspect Ratio (= section height ÷ section width).

(4) R = Radial Construction

(5) Rim diameter in inches

▽ Load and Speed Rating Descriptions

The load and speed rating descriptions will appear following the size designation.

They provide two important facts about the tire. First, the number designation is its load index. Second, the letter designation indicates the tire’s speed rating.

Example:

P	205 / 60 R 16	91	V
	Size designation	(6)	(7)

(6) Load Index: A numerical code which specifies the maximum load a tire can carry at the speed indicated by its speed symbol, at maximum inflation pressure.

For example, “91” means 1,356 lbs (615 kg), “90” means 1,323 lbs (600 kg), “89” means 1,279 lbs (580 kg)

WARNING

Load indices apply only to the tire, not to the vehicle. Putting a load rated tire on any vehicle does not mean the vehicle can be loaded up to the tire’s rated load.

(7) Speed Rating: An alphabetical system describing a tire’s capability to travel at established and predetermined speeds.

For example, “V” means 149 mph (240 km/h)

WARNING

- **Speed ratings apply only to the tire, not to the vehicle. Putting a speed rated tire on any vehicle does not mean the vehicle can be operated at the tire’s rated speed.**
- **The speed rating is void if the tires are worn out, damaged, repaired, retreaded, or otherwise altered from their original condition. If tires are repaired, retreaded, or otherwise altered, they may not be suitable for original equipment tire designed loads and speeds.**

▼ Tire Identification Number (TIN)

Tire Identification Number (TIN) is marked on the intended outboard sidewall. The TIN is composed of four groups. Here is a brief review of the TIN with a breakdown of its individual elements.

DOT	XX	XX	XXX	XXXX
	(1)	(2)	(3)	(4)

(1) Manufacturer’s Identification Mark

(2) Tire Size

(3) Tire Type Code

(4) Date of Manufacture

The first two figures identify the week, starting with “01” to represent the first full week of the calendar year; the second two figures represent the year. For example, 0101 means the 1st week of 2001.

▼ Other markings

The following makings are also placed on the sidewall.

▽ Maximum permissible inflation pressure

The maximum cold inflation pressure to which this tire may be inflated. For example, “350 kPa (51 PSI) MAX. PRESS”

– CONTINUED –

▽ **Maximum load rating**

The load rating at the maximum permissible weight load for this tire. For example, “MAX. LOAD 615 kg (1,356 LBS) @ 350 kPa (51 PSI) MAX. PRESS.”

⚠ WARNING

Maximum load rating applies only to the tire, not to the vehicle. Putting a load rated tire on any vehicle does not mean the vehicle can be loaded up to the tire’s rated load.

▽ **Construction type**

Applicable construction of this tire. For example, “TUBELESS STEEL BELTED RADIAL”

▽ **Construction**

The generic name of each cord material used in the plies (both sidewall and tread area) of this tire. For example, “PLIES: TREAD 2 STEEL + 2 POLYESTER + 1 NYLON SIDEWALL 2 POLYESTER”

▽ **Uniform Tire Quality Grading (UTQG)**

For details, refer to “Uniform tire quality grading standards” ☞13-14.

■ Recommended tire inflation pressure

▼ Recommended cold tire inflation pressure

For the recommended cold tire inflation pressure for your vehicle’s tires, refer to “Tires” ☞12-9.

▼ Vehicle placard

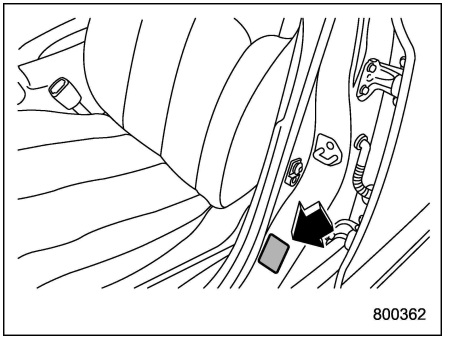

The vehicle placard is affixed to the driver’s side B-pillar.

Example:

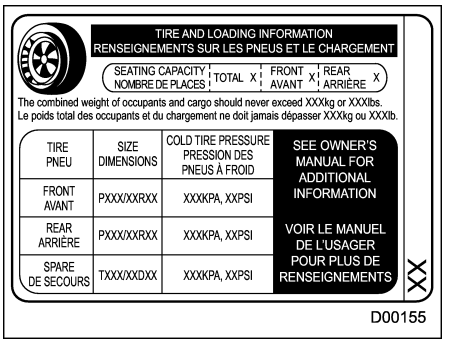

The vehicle placard shows original tire size, recommended cold tire inflation pressure on each tire at maximum loaded vehicle weight, seating capacity and loading information.

▼ **Adverse safety consequences of under-inflation**

Driving at high speeds with excessively low tire pressures can cause the tires to flex severely and to rapidly become hot. A sharp increase in temperature could cause tread separation, and failure of the tire(s). Possible resulting loss of vehicle control could lead to an accident.

▼ **Measuring and adjusting air pressure to achieve proper inflation**

Check and, if necessary, adjust the pressure of each tire (including the spare) at least once a month and before any long journey. Check the tire pressures when the tires are cold. Use a pressure gauge to adjust the tire pressures to the specific values. Driving even a short distance warms up the tires and increases the tire pressures. Also, the tire pressures are affected by the outside temperature. It is best to check tire pressure outdoors before driving the vehicle. When a tire becomes warm, the air inside it expands, causing the tire pressure to increase. Be careful not to mistakenly release air from a warm tire to reduce its pressure.

■ Glossary of tire terminology

- **Accessory weight**

The combined weight (in excess of those standard items which may be replaced) of automatic transmission, power steering, power brakes, power windows, power seats, radio, and heater, to the extent that these items are available as factory-installed equipment (whether installed or not).

- **Bead**

The part of the tire that is made of steel wires, wrapped or reinforced by ply cords and that is shaped to fit the rim.

- **Bead separation**

A breakdown of the bond between components in the bead.

- **Bias ply tire**

A pneumatic tire in which the ply cords that extend to the beads are laid at alternate angles substantially less than 90 degrees to the centerline of the tread.

- **Carcass**

The tire structure, except tread and sidewall rubber which, when inflated, bears the load.

- **Chunking**

The breaking away of pieces of the tread or sidewall.

- **Cold tire pressure**

The pressure in a tire that has been driven less than 1 mile or has been standing for three hours or more.

- **Cord**

The strands forming the plies in the tire.

- **Cord separation**

The parting of cords from adjacent

– CONTINUED –

rubber compounds.

- **Cracking**

Any parting within the tread, sidewall, or inner liner of the tire extending to cord material.

- **Curb weight**

The weight of a motor vehicle with standard equipment including the maximum capacity of fuel, oil and coolant, and if so equipped, air conditioning and additional weight optional engine.

- **Extra load tire**

A tire designed to operate at higher loads and higher inflation pressure than the corresponding standard tire.

- **Groove**

The space between two adjacent tread ribs.

- **Innerliner**

The layer(s) forming the inside surface of a tubeless tire that contains the inflating medium within the tire.

- **Innerliner separation**

The parting of the innerliner from cord material in the carcass.

- **Intended outboard sidewall**

(1) The sidewall that contains a whitewall, bears white lettering or bears manufacturer, brand, and/or model name molding that is higher or deeper than the same molding on the other sidewall of the tire, or

(2) The outward facing sidewall of an asymmetrical tire that has a particular side that must always face outward when mounting on a vehicle.

- **Light truck (LT) tire**

A tire designated by its manufacturer as primarily intended for use on lightweight trucks or multipurpose passenger vehicles.

- **Load rating**

The maximum load that a tire is rated to carry for a given inflation pressure.

- **Maximum inflation pressure**

The maximum cold inflation pressure to which a tire may be inflated.

- **Maximum load rating**

The load rating for a tire at the maximum permissible inflation pressure for that tire.

- **Maximum loaded vehicle weight**

The sum of:

(a) Curb weight
(b) Accessory weight
(c) Vehicle capacity weight
(d) Production options weight

- **Maximum permissible inflation pressure**

The maximum cold inflation pressure to which a tire may be inflated.

- **Measuring rim**

The rim on which a tire is fitted for physical dimension requirements.

- **Normal occupant weight**

150 lbs (68 kg) times the number of occupants specified in the second column of Table 1 that is appended to the end of this section.

- **Occupant distribution**

Distribution of occupants in a vehicle as specified in the third column of Table 1 that is appended to the end of this section.

- **Open splice**

Any parting at any junction of tread,

sidewall, or innerliner that extends to cord material.

- **Outer diameter**

The overall diameter of an inflated new tire.

- **Overall width**

The linear distance between the exteriors of the sidewalls of an inflated tire, including elevations due to labeling, decorations, or protective bands or ribs.

- **Passenger car tire**

A tire intended for use on passenger cars, multipurpose passenger vehicles, and trucks, that have a gross vehicle weight rating (GVWR) of 10,000 lbs (4,535 kg) or less.

- **Ply**

A layer of rubber-coated parallel cords.

- **Ply separation**

A parting of rubber compound between adjacent plies.

- **Pneumatic tire**

A mechanical device made of rubber, chemicals, fabric and steel or other materials, that, when mounted on an automotive wheel, provides the traction and contains the gas or fluid that sustains the load.

- **Production options weight**

The combined weight of those installed regular production options weighing over 5.1 lbs (2.3 kg) in excess of those standard items which they replace, not previously considered in curb weight or accessory weight, including heavy duty brakes, ride levelers, roof rack, heavy duty battery, and special trim.

- **Radial ply tire**

A pneumatic tire in which the ply cords that extend to the beads are laid at substantially 90 degrees to the centerline of the tread.

- **Recommended inflation pressure**

The cold inflation pressure recommended by a vehicle manufacturer.

- **Reinforced tire**

A tire designed to operate at higher loads and at higher inflation pressures than the corresponding standard tire.

- **Rim**

A metal support for a tire or a tire and tube assembly upon which the tire beads are seated.

- **Rim diameter**

Nominal diameter of the bead seat.

- **Rim size designation**

Rim diameter and width.

- **Rim type designation**

The industry of manufacturer's designation for a rim by style or code.

- **Rim width**

Nominal distance between rim flanges.

- **Section width**

The linear distance between the exteriors of the sidewalls of an inflated tire, excluding elevations due to labeling, decoration, or protective bands.

- **Sidewall**

That portion of a tire between the tread and bead.

- **Sidewall separation**

The parting of the rubber compound from the cord material in the side-

– CONTINUED –

wall.

- **Test rim**

The rim on which a tire is fitted for testing, and it may be any rim listed as appropriate for use with that tire.

- **Tread**

That portion of a tire that comes into contact with the road.

- **Tread rib**

A tread section running circumferentially around a tire.

- **Tread separation**

Pulling away of the tread from the tire carcass.

- **Treadwear indicators (TWI)**

The projections within the principal grooves designed to give a visual indication of the degrees of wear of the tread.

- **Vehicle capacity weight**

The rated cargo and luggage load plus 150 lbs (68 kg) times the vehicle's designated seating capacity.

- **Vehicle maximum load on the tire**

Load on an individual tire that is determined by distributing to each axle its share of the maximum loaded vehicle weight and dividing by two.

- **Vehicle normal load on the tire**

Load on an individual tire that is determined by distributing to each axle its share of the curb weight, accessory weight, and normal occupant weight (distributed in accordance with Table 1 that is appended to the end of this section) and dividing by 2.

- **Wheel-holding fixture**

The fixture used to hold the wheel and tire assembly securely during testing.

Table 1 — Occupant loading and distribution for vehicle normal load for various designated seating capacities

Designated seating capacity, number of occupants	Vehicle normal load, number of occupants	Occupant distribution in a normally loaded vehicle
2 through 4	2	2 in front.
5 through 10	3	2 in front, 1 in second seat.
11 through 15	5	2 in front, 1 in second seat, 1 in third seat, 1 in fourth seat.
16 through 22	7	2 in front, 2 in second seat, 2 in third seat, 1 in fourth seat.

■ Tire care – maintenance and safety practices

- Check on a daily basis that the tires are free from serious damage, nails, and stones. At the same time, check the tires for abnormal wear.
- Inspect the tire tread regularly and replace the tires before their tread wear indicators become visible. When a tire's tread wear indicator becomes visible, the tire is worn beyond the acceptable limit and must be replaced immediately. With a tire in this condition, driving at even low speeds in wet weather can cause the vehicle to hydroplane. Possible resulting loss of vehicle control can lead to an accident.

– CONTINUED –

- To maximize the life of each tire and ensure that the tires wear uniformly, it is best to rotate the tires every 7,500 miles (12,000 km). Rotating the tires involves switching the front and rear tires on the right-hand side of the vehicle and similarly switching the front and rear tires on the left-hand side of the vehicle. (Each tire must be kept on its original side of the vehicle.) Replace any damaged or unevenly worn tire at the time of rotation. After tire rotation, adjust the tire pressures and make sure the wheel nuts are correctly tightened. For information about the tightening torque and tightening sequence for the wheel nuts, refer to "Flat tires" ☞9-5.

■ Vehicle load limit – how to determine

The load capacity of your vehicle is determined by weight, not by available cargo space. The load limit of your vehicle is shown on the vehicle placard attached to the driver's side B-pillar. Locate the statement "The combined weight of occupants and cargo should never exceed XXX kg or XXX lbs" on your vehicle's placard.

The vehicle placard also shows seating capacity of your vehicle.

The total load capacity includes the total weight of driver and all passengers and their belongings, any cargo, any optional equipment such as a trailer hitch, roof rack or bike carrier, etc., and the tongue load of a trailer. Therefore cargo capacity can be calculated by the following method.

Cargo capacity = Load limit − (total weight of occupants + total weight of optional equipment + tongue load of a trailer (if applicable))

For towing capacity information and weight limits, refer to "Trailer towing (Outback)" ☞8-22.

▼ Calculating total and load capacities varying seating configurations

Calculate the available load capacity as shown in the following examples:

Example 1A

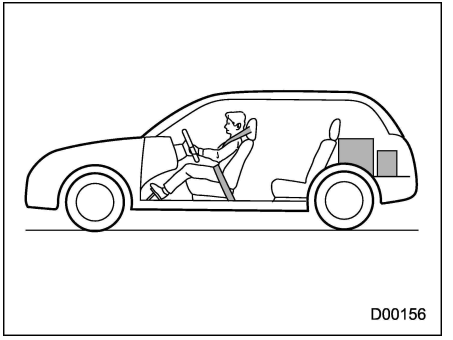

Vehicle capacity weight of the vehicle is 800 lbs (363 kg), which is indicated on the vehicle placard with the statement "The combined weight of occupants and cargo should never exceed 363 kg or 800 lbs".

For example, if the vehicle has one

occupant weighing 154 lbs (70 kg) plus cargo weighing 551 lbs (250 kg).

1. Calculate the total weight.

Total weight

= 154 lbs (70 kg) (Occupant) + 551 lbs (250 kg) (Cargo)

= **705 lbs (320 kg)**

2. Calculate the available load capacity by subtracting the total weight from the vehicle capacity weight of 800 lbs (363 kg).

Available Load Capacity

= 800 lbs (363 kg) (Vehicle capacity weight) – 705 lbs (320 kg) (Total weight)

= **95 lbs (43 kg)**

3. The result of step 2 shows that a further 95 lbs (43 kg) of cargo can be carried.

Example 1B

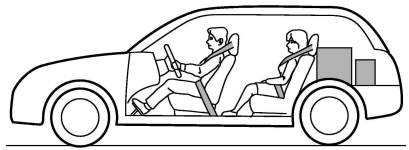

For example, if a person weighing 176 lbs (80 kg) now enters the same vehicle (bringing the number of occupants to two), the calculations are as follows:

1. Calculate the total weight.

Total weight

= 154 lbs (70 kg) + 176 lbs (80 kg) (Occupant)

+ 551 lbs (250 kg) (Cargo)

= **881 lbs (400 kg)**

2. Calculate the available load capacity.

Available Load Capacity

= 800 lbs (363 kg) (Vehicle capacity weight) – 881 lbs (400 kg) (Total weight)

= **–81 lbs (–37 kg)**

3. The total weight now exceeds the capacity weight by 81 lbs (37 kg), so the cargo weight must be reduced by 81 lbs (37 kg) or more.

Example 2A (Outback only)

⚠ CAUTION

Legacy: Your vehicle is neither designed nor intended to be used for trailer towing. Therefore, never tow a trailer with your vehicle.

– CONTINUED –

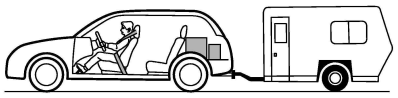

Vehicle capacity weight of the vehicle is 800 lbs (363 kg), which is indicated on the vehicle placard with the statement “The combined weight of occupants and cargo should never exceed 363 kg or 800 lbs”.

For example, the vehicle has one occupant weighing 165 lbs (75 kg) plus cargo weighing 265 lbs (120 kg). In addition, the vehicle is fitted with a trailer hitch weighing 22 lbs (10 kg), to which is attached a trailer weighing 1,764 lbs (800 kg). 10% of the trailer weight is applied to the trailer tongue (i.e. Tongue load = 176 lbs (80 kg)).

1. Calculate the total weight.

Total weight

= 165 lbs (75 kg) (Occupant) + 265 lbs (120 kg) (Cargo)

+ 22 lbs (10 kg) (Trailer hitch) + 176 lbs (80 kg) (Tongue load)

= **628 lbs (285 kg)**

2. Calculate the available load capacity.

Available Load Capacity

= 800 lbs (363 kg) (Vehicle capacity weight) – 628 lbs (285 kg) (Total weight)

= **172 lbs (78 kg)**

3. The result of step 2 shows that a further 172 lbs (78 kg) of cargo can be carried.

Example 2B (Outback only)

⚠ CAUTION

Legacy: Your vehicle is neither designed nor intended to be used for trailer towing. Therefore, never tow a trailer with your vehicle.

For example, if a person weighing 143 lbs (65 kg) and a child weighing 40 lbs (18 kg) now enter the same vehicle (bringing the number of occupants to three), and a child restraint system weighing 11 lbs (5 kg) is installed in the vehicle for the child to use, the calculations are as follows:

1. Calculate the total weight.

Total weight

= 165 lbs (75 kg) + 143 lbs (65 kg) (Occupant)

+ 40 lbs (18 kg) (Occupant)

+ 11 lbs (5 kg) (Child restraint) + 265 lbs (120 kg) (Cargo)

+ 22 lbs (10 kg) (Trailer hitch) + 176 lbs (80 kg) (Tongue load)

= **822 lbs (373 kg)**

2. Calculate the available load capacity.

Available Load Capacity

= 800 lbs (363 kg) (Vehicle capacity weight) – 822 lbs (373 kg) (Total weight)

= **–22 lbs (–10 kg)**

3. The total weight now exceeds the capacity weight by 22 lbs (10 kg), so the cargo weight must be reduced by 22 lbs (10 kg) or more.

■ Determining compatibility of tire and vehicle load capacities

The sum of four tires' maximum load ratings must exceed the maximum loaded vehicle weight ("GVWR"). In addition, sum of the maximum load ratings of two front tires and of two rear tires must exceed each axle's maximum loaded capacity ("GAWR"). Original equipment tires are designed to fulfill those conditions.

The maximum loaded vehicle weight is referred to Gross Vehicle Weight Rating (GVWR). And each axle's maximum loaded capacity is referred to Gross Axle Weight Rating (GAWR). The GVWR and each axle's GAWR are shown on the vehicle certification label affixed to the driver's door.

The GVWR and front and rear GAWRs are determined by not only the maximum load rating of tires but also loaded capacities of the vehicle's suspension, axles and other parts of the body.

Therefore, this means that the vehicle cannot necessarily be loaded up to the tire's maximum load rating on the tire sidewall.

■ Adverse safety consequences of overloading on handling and stopping and on tires

Overloading could affect vehicle handling, stopping distance, vehicle and tire as shown in the following. This could lead to an accident and possibly result in severe personal injury.

- Vehicle stability will deteriorate.
- Heavy and/or high-mounted loads could increase the risk of rollover.
- Stopping distance will increase.
- Brakes could overheat and fail.
- Suspension, bearings, axles and other parts of the body could break or experience accelerated wear that will shorten vehicle life.
- Tires could fail.
- Tread separation could occur.

– CONTINUED –

- Tire could separate from its rim.

■ Steps for Determining Correct Load Limit

1. Locate the statement “The combined weight of occupants and cargo should never exceed XXX kg or XXX lbs.” on your vehicle’s placard.
2. Determine the combined weight of the driver and passengers that will be riding in your vehicle.
3. Subtract the combined weight of the driver and passengers from XXX kg or XXX lbs.
4. The resulting figure equals the available amount of cargo and luggage load capacity. For example, if the “XXX” amount equals 1,400 lbs (635 kg) and there will be five 150 lbs (68 kg) passengers in your vehicle, the amount of available cargo and luggage load capacity is 650 lbs (1,400 − 750 (5 × 150) = 650 lbs).
5. Determine the combined weight of luggage and cargo being loaded on the vehicle. That weight may not safely exceed the available cargo and luggage load capacity calculated in Step 4.
6. If your vehicle will be towing a trailer, load from your trailer will be transferred to your vehicle. Consult this manual to determine how this reduces the available cargo and luggage load capacity of your vehicle.

Uniform tire quality grading standards

This information indicates the relative performance of passenger car tires in the area of treadwear, traction, and temperature resistance. This is to aid the consumer in making an informed choice in the purchase of tires.

Quality grades can be found where applicable on the tire sidewall between tread shoulder and maximum section width. For example:

Treadwear 200 Traction AA Temperature A

The quality grades apply to new pneumatic tires for use on passenger cars. However, they do not apply to deep tread, winter type snow tires, space-saver or temporary use spare tires, tires with nominal rim diameters of 12 inches or less, or to some limited production tires.

All passenger car tires must con-

form to Federal Safety Requirements in addition to these grades.

■ Treadwear

The treadwear grade is a comparative rating based on the wear rate of the tire when tested under controlled conditions on a specified government test course.

For example, a tire graded 150 would wear one and one-half (1-1/2) times as well on the government course as a tire graded 100. The relative performance of tires depends upon the actual conditions of their use, however, and may depart significantly from the norm due to variations in driving habits, service practices and differences in road characteristics and climate.

■ Traction AA, A, B, C

The traction grades, from highest to lowest, are AA, A, B and C. Those grades represent the tire's ability to stop on wet pavement as measured under controlled conditions on specified government test surfaces of asphalt and concrete. A tire marked C may have poor traction performance.

⚠ WARNING

The traction grade assigned to this tire is based on straight-ahead braking traction tests, and does not include acceleration, cornering, hydroplaning, or peak traction characteristics.

■ Temperature A, B, C

The temperature grades are A (the highest), B, and C, representing the tire's resistance to the generation of heat and its ability to dissipate heat when tested under controlled conditions on a specified indoor laboratory test wheel. Sustained high temperature can cause the material of the tire to degenerate and reduce tire life, and excessive temperature can lead to sudden tire failure. The grade C corresponds to a level of performance which all passenger car tires must meet under the Federal Motor Vehicle Safety Standard No. 109. Grades B and A represent higher levels of performance on the laboratory test wheel than the minimum required by law.

⚠ WARNING

The temperature grade for this tire is established for a tire that is properly inflated and not overloaded. Excessive speed, underinflation, or excessive loading, either separately or in combination, can cause heat buildup and possible tire failure.

Reporting safety defects (USA)

If you believe that your vehicle has a defect which could cause a crash or could cause injury or death, you should immediately inform the National Highway Traffic Safety Administration (NHTSA) in addition to notifying Subaru of America, Inc.

If NHTSA receives similar complaints, it may open an investigation, and if it finds that a safety defect exists in a group of vehicles, it may order a recall and remedy campaign. However, NHTSA cannot become involved in individual problems between you, your dealer, or Subaru of America, Inc. To contact NHTSA, you may call the Vehicle Safety Hotline toll-free at 1-888-327-4236 (TTY: 1-800-424-9153); go to http://www.safercar.gov; or write to: Administrator, NHTSA, 1200 New Jersey Avenue, SE, West Building, Washington, DC 20590. You can also obtain other information about motor vehicle safety from http://www.safercar.gov.

A
Abbreviation 3
ABS (Anti-lock Brake System) 7-31
Warning light 3-18
Access key 2-10
Warning indicator 3-24
Accessories 11-38
Accessory power outlet 6-9
Air cleaner element 11-15
Air conditioner
Automatic climate control system 4-5
Manual climate control system 4-6
Air filtration system 4-10
Airflow selection 4-6
Alarm system 2-29
All-Wheel Drive warning light 3-22
Alloy wheel 11-29
Alloy wheel
Cleaning 10-3
Antenna 5-2
Anti-lock Brake System (ABS) 7-31
Arming the system 2-30
Armrest 1-15
Ashtray 6-13
AT OIL TEMP warning light 3-16
Auto on/off headlights 3-46
Sensor 3-48
Vehicle setting 3-45
Auto-dimming mirror 3-69
Automatic climate control system 4-5
Automatic headlight beam leveler
Warning light 3-31
Automatic Locking Retractor/Emergency Locking Retractor (ALR/ELR) 1-17

B
Battery
Drainage prevention function 2-8
Jump starting 9-11
Replacement (access key) 11-48
Replacement (remote engine start transmitter) 7-20
Replacement (transmitter) 11-49
Vehicle battery 11-35
Booster seat 1-34
Bottle holder 6-9
Brake
Assist 7-30
Booster 7-30, 11-21
Disc 12-9
Fluid 11-19, 12-8
Pad 11-22
Parking 7-40
Pedal 11-21
System 7-30
Brake pedal
Free play 11-21
Reserve distance 11-21
Brake system 7-30
Warning light 3-18
Braking 7-29
Tips 7-29

Breaking-in of new brake pads 11-22
BSD/RCTA 7-49
Approach indicator light/warning buzzer 7-53
OFF indicator 3-31, 3-39, 7-53
OFF switch 7-55
Warning indicator 3-31, 3-39, 7-54
Warning volume 3-43
Bulb
Chart 12-14
Replacing 11-38

C

Cargo area
Cover 6-16
Light 6-3, 11-46
Tie-down hooks 6-20
Catalytic converter 8-3
Center
Console 6-6
Changing
Coolant 11-15
Flat tire 9-5
Oil and oil filter 11-13
Charge warning light 3-15
CHECK ENGINE warning light/Malfunction indicator light 3-15
Checking
Brake pedal free play 11-21
Brake pedal reserve distance 11-21
Coolant level 11-15
Fluid level (brake fluid) 11-19
Fluid level (washer fluid) 11-30
Oil level (engine oil) 11-11
Child restraint systems 1-27
Installation of a booster seat 1-34
Installation with ALR/ELR seatbelt 1-30
Lower and tether anchorages 1-36
Top tether anchorages 1-39
Child safety 5
Locks 2-34
Chime
Key 3-4
Light 3-45
Seatbelt 3-12
Cleaning
Alloy wheels 10-3
Interior 10-5
Ventilation grille 4-9
Climate control system 4-3
Automatic 4-5
Manual 4-6
Clock 3-33
Coat hook 6-13
Console 6-6
Continuously variable transmission (CVT) 7-22
Fluid 11-19, 12-8
Oil temperature warning light (AT OIL TEMP) 3-16
Coolant 11-15, 12-8
Cooling system 11-14
Corrosion protection 10-4
Crossbars 8-15
Cruise control 7-45

Indicator 3-30
Set indicator 3-31
Cup holder 6-8
Front passenger's 6-8
Rear passenger's 6-8

D

Daytime running light system 3-53
Defogger 3-61
Defrosting 4-9
Deicer 3-61
Differential gear oil
Front 11-19, 12-7
Rear 11-19, 12-7
Dimensions 12-2
Disarming the alarm system 2-33
Disc brake pad wear warning indicators 7-30
Dome light 6-2, 11-45
Door
Locks 2-6
Open indicator light 3-21
Step light 11-46
Unlock selection function 2-18, 3-44
Double trip meter 3-9
Drive belts 11-18
Driving
All-Wheel Drive warning light 3-22
AWD vehicles 8-5
Car phone/cell phone 7
Drinking 6
Drugs 6
Foreign countries 8-4
Off road 8-6
Pets 7
Snowy and icy roads 8-10
Tips 7-28, 8-2, 8-5
Tired or sleepy 7
Winter 8-8

E

ECO gauge 3-11
Electrical system 12-9
Electronic Brake Force Distribution (EBD) system 7-31
Warning 3-19
Electronic parking brake 7-40
Automatic release function by accelerator pedal 7-42
Hill Holder 7-43
Indicator light 3-20
Warning 3-20, 7-44
Emergency Locking Retractor (ELR) 1-17
Engine
Compartment overview 11-9
Coolant 11-15, 12-8
Exhaust gas (carbon monoxide) 6, 8-2
Hood 11-7
Low oil level warning indicator 3-16
Oil 11-11, 12-4
Overheating 9-14
Starting & stopping 7-9, 7-11
Event data recorder 9
Exterior care 10-2

F
Flat tires 9-5
Floor mat 6-16
Fluid level
Brake 11-19
Continuously variable transmission 11-19
Fog light
Bulb 11-40, 12-14
Indicator light 3-31
Switch 3-57
Front
Differential gear oil 11-19, 12-7
Seatbelt pretensioners 1-24
Turn signal light 11-40
Front seats 1-2
Forward and backward adjustment 1-4
Head restraint adjustment 1-8
Memory function 1-6
Power seat 1-5
Reclining 1-4
Seat height adjustment (driver's seat) 1-4
Fuel 7-3
Consumption indicator 3-36
Economy hints 8-2
Filler lid and cap 7-4
Gauge 3-10
Requirements 7-3, 12-3
Fuses 11-36
Fuses and circuits 12-10

G
GAWR (Gross Axle Weight Rating) 8-14
Glove box 6-6
GVWR (Gross Vehicle Weight Rating) 8-14

H
Hazard warning flasher 3-7, 9-2
Head restraint adjustment
Front seat 1-8
Rear seat 1-14
Headlight 3-46
Beam leveler 3-55
Bulb wattage 12-14
Control switch 3-45
Flasher 3-53
Indicator light 3-31
Welcome lighting function 3-47
Heated Steering Wheel system 3-83
High Beam Assist 3-48
High beam assist function 3-48
Indicator light 3-30
Warning indicator 3-30
High beam indicator light 3-30
High/low beam change (dimmer) 3-48
Hill descent control 7-37
Indicator 3-31
Hill Holder 7-43
Indicator light 3-21
Switch 7-43
HomeLink® 3-63, 3-69

Hook
Coat 6-13
Convenient 6-15
Convenient tie-down 6-20
Shopping bag 6-14
Towing and tie-down 9-15
Horn 3-83
Hose and connections 11-14

I
Ignition switch 3-3
Light 3-4
Illumination brightness control 3-56
Immobilizer 2-4
Indicator light (security indicator light) 3-29
Indicator light
BSD/RCTA OFF 3-31
Cruise control 3-30
Cruise control set 3-31
Door open 3-21
Electronic parking brake 3-20
Front fog light 3-31
Headlight 3-31
High beam 3-30
High beam assist 3-30
Hill descent control 3-31
Hill Holder 3-21
Immobilizer 3-29
Security 3-29
Select lever/Gear position 3-30
Turn signal 3-30
Vehicle Dynamics Control OFF 3-24
Vehicle Dynamics Control operation 3-23
X-mode 3-31
Information display 3-32
Inside mirror 3-63
Interior lights 6-2
Internal trunk lid release handle 2-39

J
Jack-up point 9-5
Jump starting 9-11

K
Key 2-3
Number 2-3
Reminder chime 3-4
Replacement 2-5
Keyless access with push-button start system 2-10
Disabling keyless access functions 2-19
Locking and unlocking doors 2-14
Opening rear gate 2-16
Opening trunk 2-17
Warning chimes and warning indicator 3-24
When access key does not operate properly 9-19
Keyless entry system 2-25

L
LCA 7-50
Leather seat materials 10-5
License plate light 11-44

Light
Backup 11-43
Cargo area 6-3, 11-46
Control switch 3-45
Daytime running 3-53
Dome 6-2, 11-45
Door step 11-46
Front fog 3-57, 11-40
Front side marker 3-46
Ignition switch 3-4
License plate 11-44
Map 6-2, 11-46
Rear combination 11-41
Rear side marker light 11-41
Rear turn signal 11-41
Trunk 11-46
Turn signal 3-55, 11-40, 11-41
Vanity mirror 6-5
Loading your vehicle 8-12
Low fuel warning light 3-21
Low tire pressure warning light 3-16
Lower and tether anchorage 1-36

M
Maintenance
Precautions 11-3
Schedule 11-3
Seatbelt 1-24
Tips 11-5
Tools 9-3
Malfunction indicator light (check engine warning light) 3-15
Manual
Climate control system 4-6
Mode (continuously variable transmission) 7-27
Seat 1-4
Transmission oil 12-7
Map light 6-2, 11-46
Maximum load limits 8-22
Meters and gauges 3-7
Mirror defogger 3-61
Mirrors 3-63
Moonroof 2-48
Multi information display 3-34

N
New vehicle break-in driving 8-2

O
Odometer 3-8
Off road driving 8-6
Oil filter 11-13
Oil level
Engine 11-11
Warning light 3-16
Oil pressure warning light 3-15
Outside
Mirror defogger 3-61
Mirrors 3-81
Temperature indicator 3-34
Overhead console 6-7

Overheating engine 9-14

P

Parking 7-40
  Brake 7-40
  Tips 7-45
Periodic inspections 8-4
Petrol fuel 7-3
PIN Code Access 2-22
Pocket 6-7
Power
  Door locking switch 2-9
  Outlets 6-9
  Outside mirrors 3-82
  Rear gate 2-42, 9-22
  Seat 1-5
  Steering 7-28
  Steering warning light 3-22
  Windows 2-35
Precautions against vehicle modification 1-27, 1-70
Preparing to drive 7-8
Push-button
  Ignition switch 3-5
  Starting and stopping engine 7-11

R

RAB (Reverse Automatic Braking)
  OFF indicator 3-32
  ON/OFF setting 7-66
  Warning indicator 3-32
RCTA 7-50
Rear
  Combination lights 11-41
  Differential gear oil 11-19, 12-7
  Gate 2-41
  Turn signal light 11-41
Rear seat 1-11
  Armrest 1-15
  Folding down 1-12
  Head restraint adjustment 1-14
  Reclining 1-11
Rear window
  Defogger 3-61
  Wiper and washer switch 3-60
  Wiper blades 11-33
Recommended
  Brake fluid 12-8
  Continuously variable transmission fluid 12-8
  Engine oil 12-4
  Front differential gear oil 12-7
  Rear differential gear oil 12-7
  Spark plugs 12-9
Refueling 7-4
Remote engine start system 7-14
Remote keyless entry system 2-25
Replacement
  Brake pad and lining 11-22
  Wiper blades 11-31
Replacing
  Access key battery 11-48
  Air cleaner element 11-16
  Lost transmitters (remote keyless entry system) 2-28

Remote engine start transmitter battery 7-20
Remote keyless entry transmitter battery 11-49
Replacing bulbs 11-38, 12-14
Backup light 11-43
Cargo area light 11-46
Dome light 11-45
Door step light 11-46
Front fog light 11-40
Front turn signal light 11-40
Halogen headlight 11-38
Headlight 11-38
LED headlight 11-38
License plate light 11-44
Map light 11-46
Rear combination light 11-41
Rear side marker light 11-41
Rear turn signal light 11-41
Trunk light 11-46
Rocking the vehicle 8-12
Roof rack 8-14
Roof rails with integrated cross bars 8-15
Rope hook 8-18

S

Safety
Precautions when driving 4
Symbol 3
Warnings 2
Seat
Fabric 10-5
Front 1-2
Heater 1-9
Height adjustment 1-4
Memory function 1-6
Power 1-5
Rear 1-11
Seatbelt 4, 1-16
Fastening 1-17
Maintenance 1-24
Pretensioners 1-24
Safety tips 1-16
Warning light and chime 3-12
Security
Alarm system 2-29
Immobilizer 2-4
Indicator light 3-29
Shock sensors 2-34
Select lever
Position indicator 3-30
Shift lock function 7-25
Shock sensors 2-34
Shopping bag hook 6-14
Snow tires 8-11, 11-23
Snowy and icy roads 8-10
Spark plugs 11-18, 12-9
Specifications 12-2
Speedometer 3-8
SRS airbag (Supplemental Restraint System airbag) 4, 1-41
SRS airbag system
Monitors 1-68
Servicing 1-69

Warning light 3-14
Starting & stopping engine 7-9, 7-11
State emission testing (U.S. only) 7-7
Steering Responsive Headlight 3-54
Steering wheel
Lock 7-10, 7-13
Power 7-28
Tilt/telescopic 3-82
Stop light 12-15
Storage compartment 6-6
Sun shade 2-50
Sun visors 6-4
Supplemental Restraint System airbag (SRS) 1-41
Synthetic leather upholstery 10-6

T

Tachometer 3-9
Temperature gauge 3-11
Temperature warning light
AT OIL TEMP 3-16
Temporary spare tire 9-2
Tether (child restraint system) 1-36, 1-39
Tie-down hooks 9-15
Tire 11-22, 12-9
Chains 8-12
Inspection 11-24
Pressures and wear 11-25
Replacement 11-28
Rotation 11-27
Size and pressure 12-9
Types 11-22
Tire pressure monitoring system (TPMS) 7-38, 9-10, 11-23
Warning light 3-16
Tires and wheels 11-22
Tools 9-3
Top tether anchorages 1-36, 1-39
Towing 9-14
All wheels on the ground 9-18
Flat-bed truck 9-17
Hooks 9-15
Weight 8-22
Trailer
Connecting 8-20
Hitch (Outback) 8-19, 8-26
Towing 8-22
Towing tips 8-27
Trip meter 3-9
Trunk lid 2-38, 9-20
Release handle 2-39
Trunk light 11-46
Turn signal
Indicator lights 3-30
Lever 3-55

U

Under-floor storage compartment 6-21
USB power supply 6-11

V

Valet mode 2-33
Vanity mirror 6-5
Vehicle

Capacity weight 8-13
Identification 12-18
Symbols 4
Vehicle Dynamics Control
OFF indicator light 3-24
OFF switch 7-34
Operation indicator light 3-23
System 7-33
Warning light 3-23
Ventilator 4-2

W

Warning and indicator lights 3-12
Warning chimes
Keyless access with push-button start system 3-24
Seatbelt 3-12
Warning light
ABS 3-18
Access key 3-24
All-Wheel Drive 3-22
AT OIL TEMP 3-16
Automatic headlight beam leveler 3-31
Brake system 3-18
BSD/RCTA 3-31
Charge 3-15
CHECK ENGINE 3-15
Engine low oil level 3-16
High beam assist 3-30
Keyless access with push-button start system 3-24
LED headlight 3-31
Low fuel 3-21
Low tire pressure 3-16
Oil pressure 3-15
Power steering 3-22
Seatbelt 3-12
SRS airbag system 3-14
Steering Responsive Headlight 3-31
Vehicle Dynamics Control 3-23
Windshield washer fluid 3-22
Warning volume
BSD/RCTA 3-43
Warranties 1
Warranties and maintenance 8-22
Washing 10-2
Waxing and polishing 10-3
Wear indicators 11-27
Welcome lighting function 3-47
Wheel
Alloy 11-29
Balance 11-26
Nut tightening torque 12-9
Replacement 11-29
Windows 2-35
Windshield
Washer fluid 11-30
Wiper and washer switches 3-59
Wiper blades 11-32
Wiper deicer 3-61
Winter
Driving 8-8
Tires 8-11, 11-23
Wiper and washer 3-57

Wiper deicer..... 3-61
X
X-mode 7-35
Indicator 3-31

GAS STATION REFERENCE

■ Fuel:

Use only **unleaded gasoline** with an octane rating of **87 AKI (90 RON) or higher**.

■ Fuel octane rating

▼ RON

This octane rating is the Research Octane Number.

▼ AKI

This octane rating is the average of the Research Octane and Motor Octane numbers and is commonly referred to as the Anti Knock Index (AKI).

■ Fuel capacity:

18.5 US gal (70 liters, 15.4 Imp gal)

■ Engine oil:

Always use the SUBARU approved engine oil. For further details, please contact your SUBARU dealer.
If the approved engine oil is unavailable, use the alternative engine oil described as follows.

- API classification SN with the words “RESOURCE CONSERVING”
- or ILSAC GF-5, which can be identified with the ILSAC certification mark (Starburst mark)

For the complete viscosity requirements, refer to “Engine oil” ☞12-4.

■ Engine oil capacity:

2.5 L models: 5.1 US qt (4.8 liters, 4.2 Imp qt)
3.6 L models: 6.9 US qt (6.5 liters, 5.7 Imp qt)

The indicated oil quantity is only a guideline and is estimated based on a case when the engine oil is changed with an oil filter. After refilling the engine with oil, the oil level should be checked using an oil level gauge. For more details about maintenance and service, refer to “Engine oil” ☞11-11.

■ Cold tire pressure:

Refer to “Tires” ☞12-9.