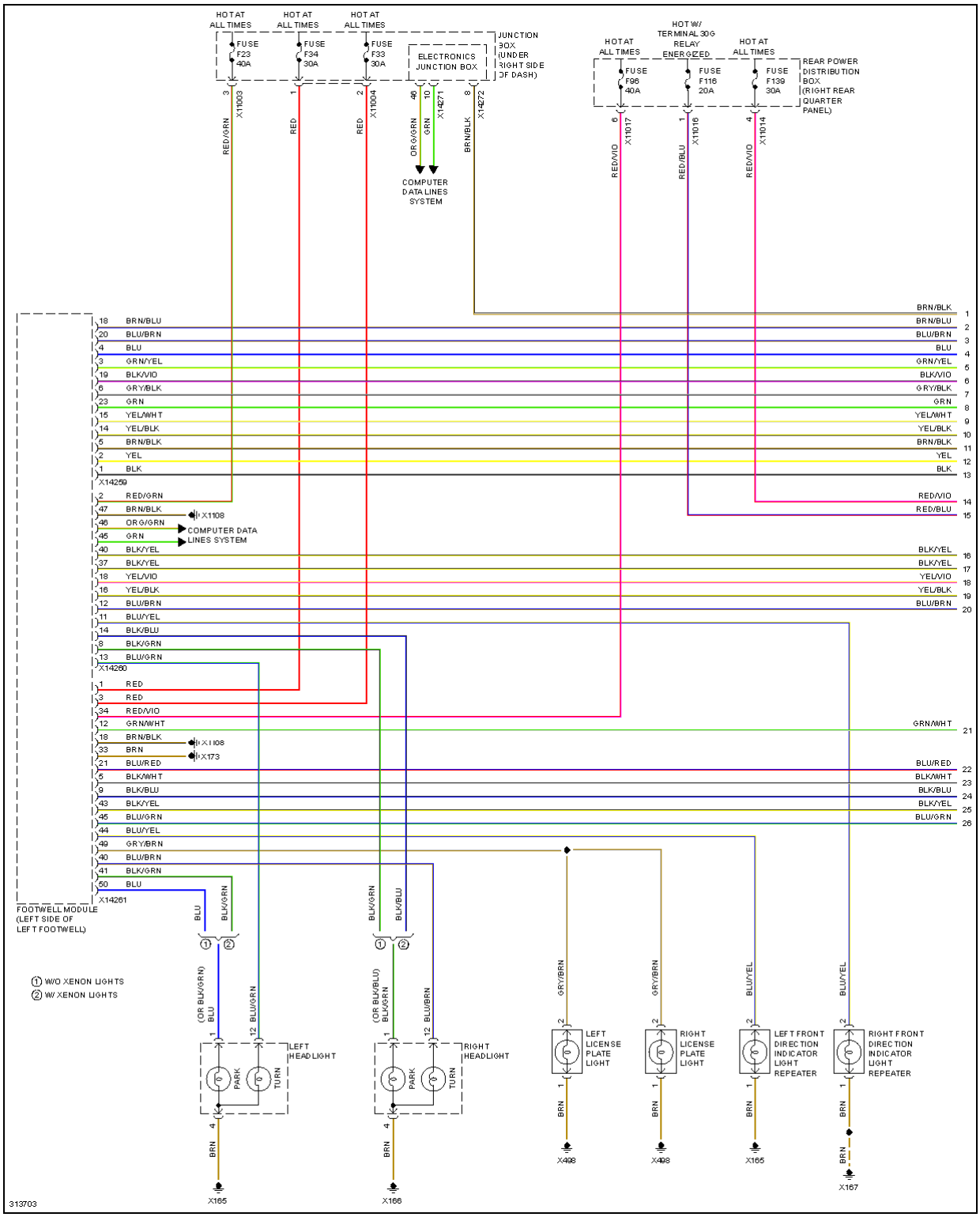


**Fig. 42: Exterior Lamps Circuit (1 of 3)**

cardiagn.com

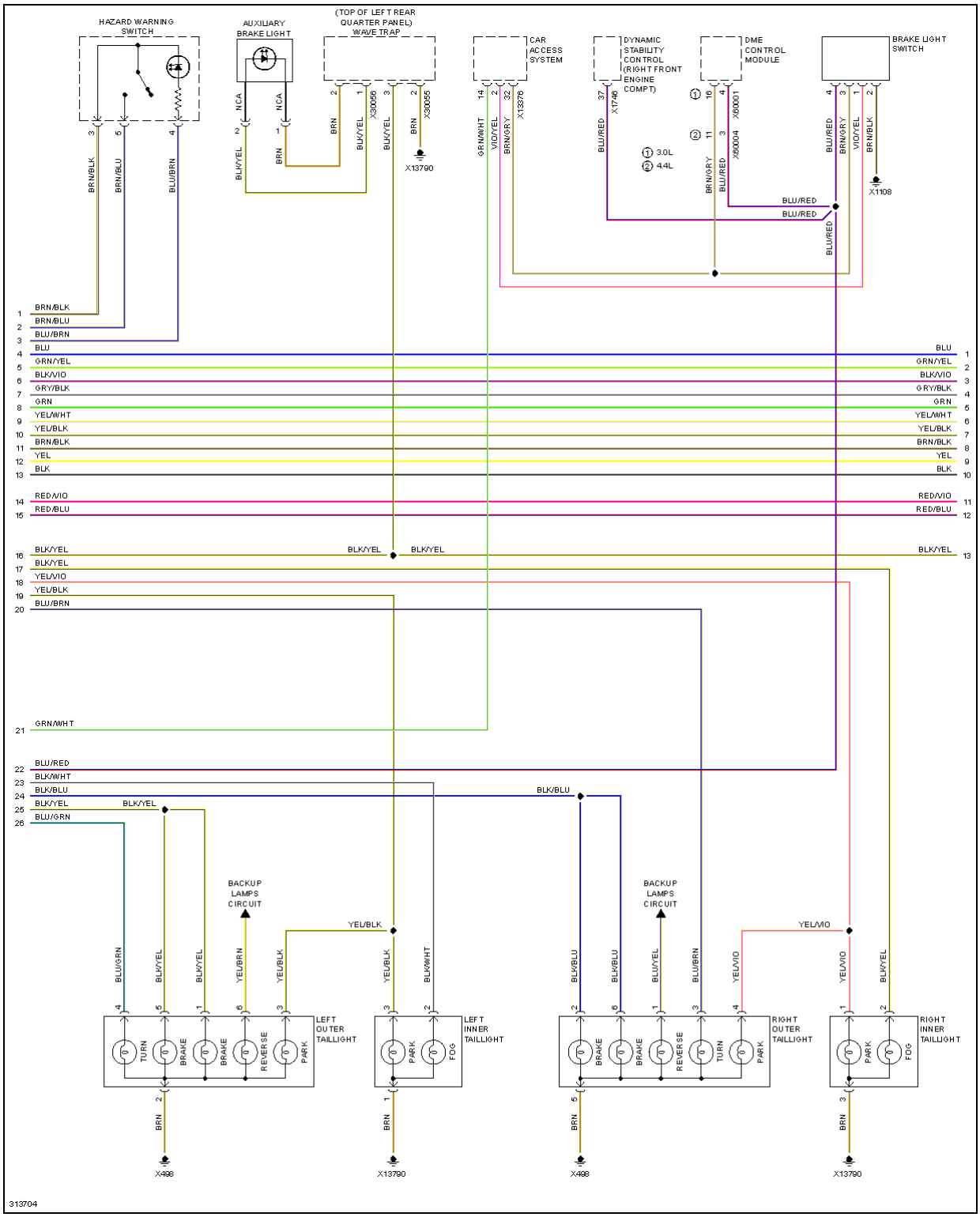


**Fig. 43: Exterior Lamps Circuit (2 of 3)**

cardiagn.com

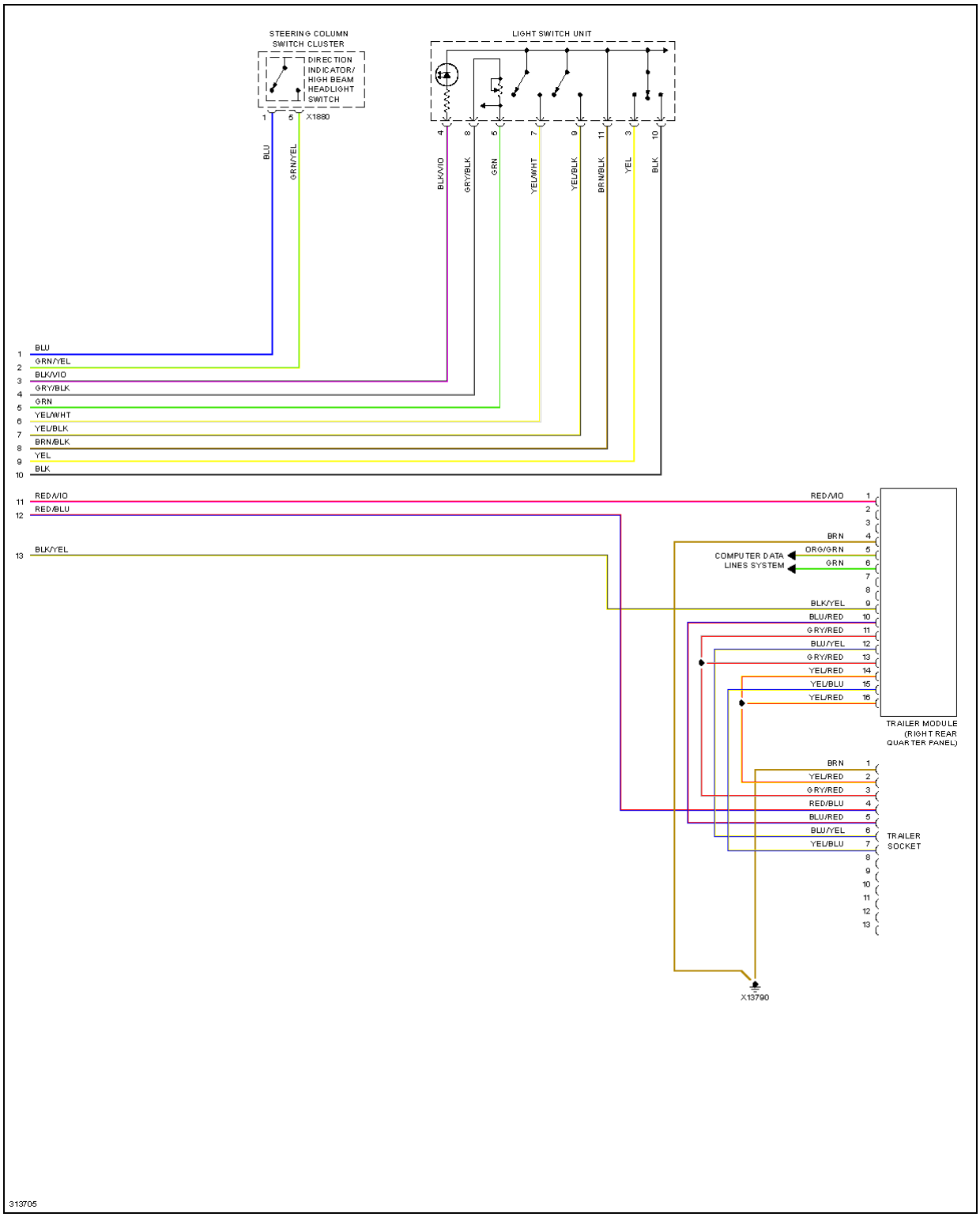


**Fig. 44: Exterior Lamps Circuit (3 of 3)**

cardiagn.com

## GROUND DISTRIBUTION

cardiagn.com