2006 Pontiac G6 Owner Manual

Seats and Restraint Systems 1-1
- Front Seats 1-2
- Rear Seats 1-9
- Safety Belts 1-10
- Child Restraints 1-30
- Airbag System 1-56
- Restraint System Check 1-71

Features and Controls 2-1
- Keys 2-3
- Doors and Locks 2-10
- Windows 2-16
- Theft-Deterrent Systems 2-19
- Starting and Operating Your Vehicle 2-22
- Mirrors 2-39
- OnStar® System 2-44
- Storage Areas 2-45
- Sunroof 2-46
- Retractable Hardtop 2-49

Instrument Panel 3-1
- Instrument Panel Overview 3-4
- Climate Controls 3-20
- Warning Lights, Gages, and Indicators 3-29
- Driver Information Center (DIC) 3-45
- Audio System(s) 3-54

Driving Your Vehicle 4-1
- Your Driving, the Road, and Your Vehicle 4-2
- Towing 4-38

Service and Appearance Care 5-1
- Service 5-3
- Fuel 5-5
- Checking Things Under the Hood 5-10
- Headlamp Aiming 5-47
- Bulb Replacement 5-49
- Windshield Wiper Blade Replacement 5-56
- Tires 5-57
- Appearance Care 5-87
- Vehicle Identification 5-96
- Electrical System 5-97
- Capacities and Specifications 5-105

Maintenance Schedule 6-1
- Maintenance Schedule 6-2

Customer Assistance and Information 7-1
- Customer Assistance and Information 7-2
- Reporting Safety Defects 7-10

Index 1

Downloaded from www.Manualslib.com manuals search engine

GENERAL MOTORS, GM, the GM Emblem, PONTIAC, and the PONTIAC Emblem, are registered trademarks; and the name G6 is a trademark of General Motors Corporation.

This manual includes the latest information at the time it was printed. We reserve the right to make changes after that time without further notice. For vehicles first sold in Canada, substitute the name “General Motors of Canada Limited” for Pontiac Division whenever it appears in this manual.

Keep this manual in the vehicle, so it will be there if it is needed while you are on the road. If the vehicle is sold, leave this manual in the vehicle.

Canadian Owners

A French language copy of this manual can be obtained from your dealer or from:

Helm, Incorporated
P.O. Box 07130
Detroit, MI 48207

How to Use This Manual

Many people read the owner manual from beginning to end when they first receive their new vehicle. If this is done, it can help you learn about the features and controls for the vehicle. Pictures and words work together in the owner manual to explain things.

Index

A good place to quickly locate information about the vehicle is the Index in the back of the manual. It is an alphabetical list of what is in the manual and the page number where it can be found.

Litho in U.S.A.
Part No. 06G6 A First Printing

©2005 General Motors Corporation. All Rights Reserved.

Downloaded from www.Manualslib.com manuals search engine

Safety Warnings and Symbols

There are a number of safety cautions in this book. We use a box and the word CAUTION to tell about things that could hurt you if you were to ignore the warning.

⚠ CAUTION:

These mean there is something that could hurt you or other people.

In the caution area, we tell you what the hazard is. Then we tell you what to do to help avoid or reduce the hazard. Please read these cautions. If you do not, you or others could be hurt.

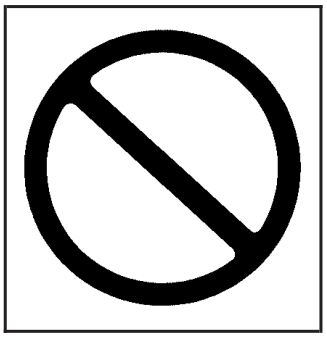

You will also find a circle with a slash through it in this book. This safety symbol means “Do Not,” “Do Not do this” or “Do Not let this happen.”

Downloaded from www.Manualslib.com manuals search engine

Vehicle Damage Warnings

Also, in this manual you will find these notices:

Notice: **These mean there is something that could damage your vehicle.**

A notice tells about something that can damage the vehicle. Many times, this damage would not be covered by your vehicle's warranty, and it could be costly. But the notice will tell what to do to help avoid the damage.

When you read other manuals, you might see CAUTION and NOTICE warnings in different colors or in different words.

There are also warning labels on the vehicle. They use the same words, CAUTION or NOTICE.

Vehicle Symbols

The vehicle has components and labels that use symbols instead of text. Symbols are shown along with the text describing the operation or information relating to a specific component, control, message, gage, or indicator.

If you need help figuring out a specific name of a component, gage, or indicator, reference the following topics:

- Seats and Restraint Systems in Section 1
- Features and Controls in Section 2
- Instrument Panel Overview in Section 3
- Climate Controls in Section 3
- Warning Lights, Gages, and Indicators in Section 3
- Audio System(s) in Section 3
- Engine Compartment Overview in Section 5

Downloaded from www.Manualslib.com manuals search engine

These are some examples of symbols that may be found on the vehicle:

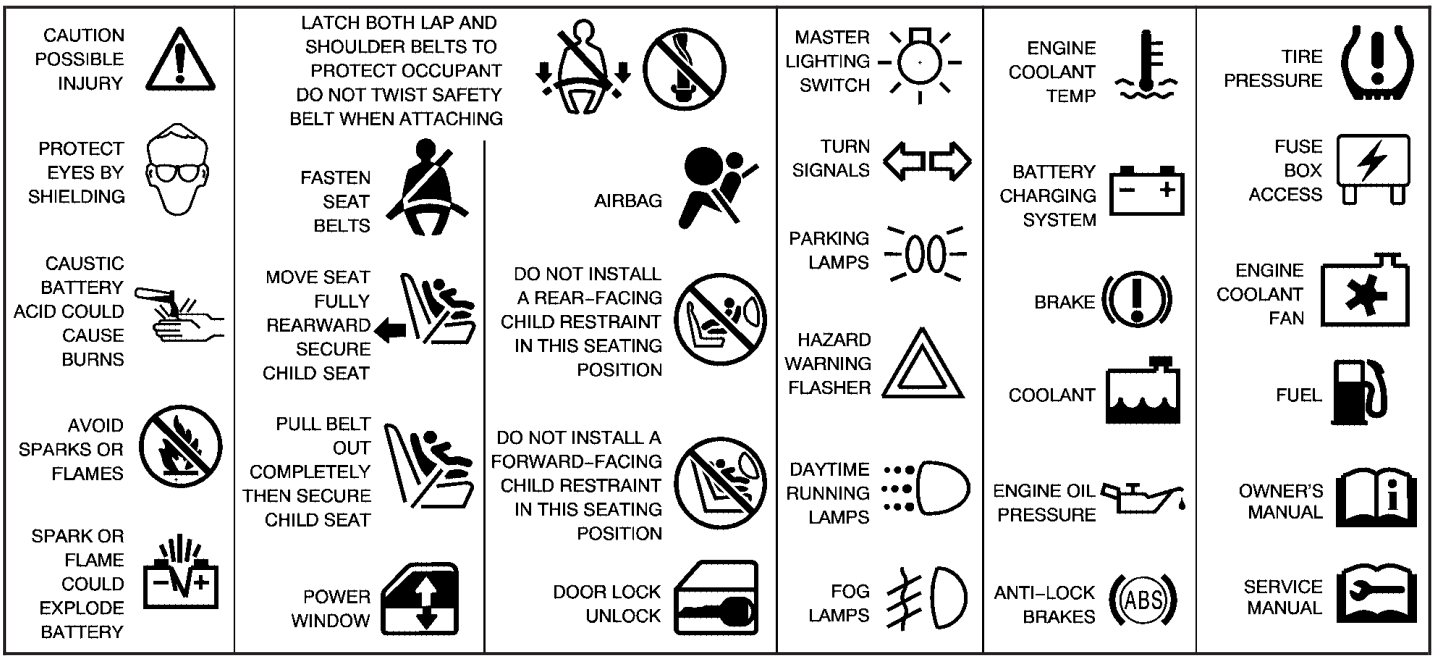

Downloaded from www.Manualslib.com manuals search engine

✍ NOTES

Downloaded from www.Manualslib.com manuals search engine

Section 1 Seats and Restraint Systems

Front Seats 1-2
Manual Seats 1-2
Power Seat 1-3
Manual Lumbar 1-3
Heated Seats 1-4
Reclining Seatbacks 1-4
Head Restraints 1-6
Easy Entry Seat 1-6
Power Lift Seat 1-8

Rear Seats 1-9
60/40 Split Bench Seat (Sedan and Coupe) 1-9

Safety Belts 1-10
Safety Belts: They Are for Everyone 1-10
Questions and Answers About Safety Belts 1-14
How to Wear Safety Belts Properly 1-15
Driver Position 1-15
Shoulder Belt Height Adjustment (Sedan Only) 1-22
Safety Belt Use During Pregnancy 1-23
Right Front Passenger Position 1-23
Rear Seat Passengers 1-23
Rear Safety Belt Comfort Guides (Sedan and Coupe Only) 1-27
Safety Belt Pretensioners 1-29
Safety Belt Extender 1-29

Child Restraints 1-30
Older Children 1-30
Infants and Young Children 1-33
Child Restraint Systems 1-36
Where to Put the Restraint 1-39
Lower Anchors and Tethers for Children (LATCH) 1-41
Securing a Child Restraint in a Rear Seat Position 1-49
Securing a Child Restraint in the Right Front Seat Position 1-52

Airbag System 1-56
Where Are the Airbags? 1-58
When Should an Airbag Inflate? 1-61
What Makes an Airbag Inflate? 1-63
How Does an Airbag Restrain? 1-63
What Will You See After an Airbag Inflates? 1-64
Passenger Sensing System 1-65
Servicing Your Airbag-Equipped Vehicle 1-70
Adding Equipment to Your Airbag-Equipped Vehicle 1-70

Restraint System Check 1-71
Checking the Restraint Systems 1-71
Replacing Restraint System Parts After a Crash 1-72

Downloaded from www.Manualslib.com manuals search engine

Front Seats

Manual Seats

⚠ CAUTION:

You can lose control of the vehicle if you try to adjust a manual driver's seat while the vehicle is moving. The sudden movement could startle and confuse you, or make you push a pedal when you do not want to. Adjust the driver's seat only when the vehicle is not moving.

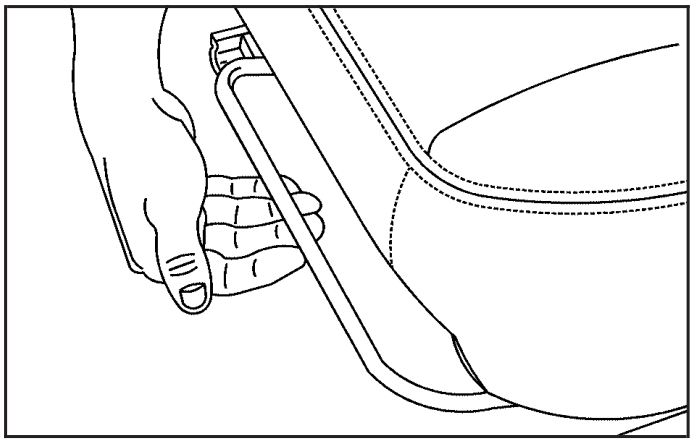

Lift the bar located under the front of the seat to unlock it. Slide the seat to where you want it and release the bar. Try to move the seat with your body to be sure the seat is locked in place.

Downloaded from www.Manualslib.com manuals search engine

Power Seat

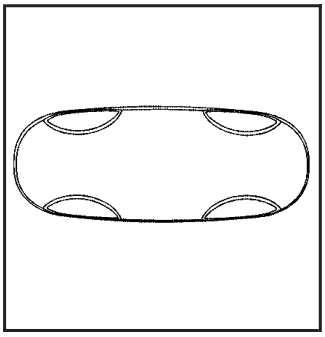

If your vehicle has this feature, the control is located on the outboard side of the driver's seat.

To adjust the seat, do the following:

- Move the seat forward or rearward by pushing the control toward the front or back of the vehicle.
- Raise or lower the front of the seat cushion by holding the front of the control up or down.
- Raise or lower the rear of the seat cushion by holding the rear of the control up or down.

Manual Lumbar

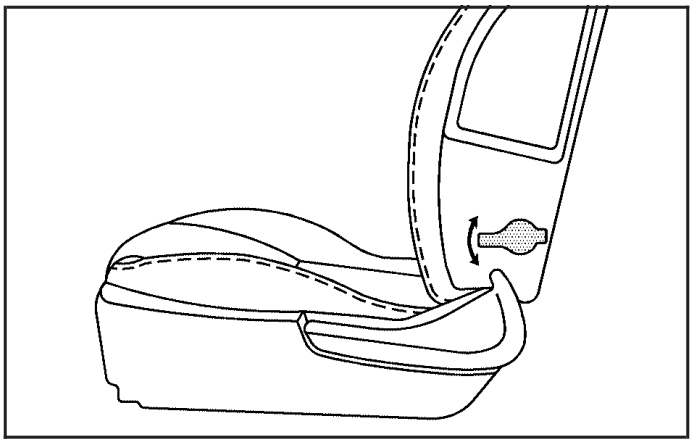

2-door Model Shown, 4-door Model Similar

If your vehicle has this feature, the handle is located on the outboard side of the driver's seat. Your vehicle may also have manual lumbar on the front passenger's seat. Move the handle up repeatedly to increase lumbar support. Move the handle down repeatedly to decrease lumbar support.

Downloaded from www.Manualslib.com manuals search engine

Heated Seats

Your vehicle may have heated front seats.

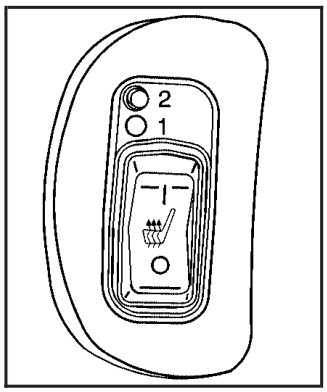

The buttons are located on the outboard side of the driver's and front passenger's seats.

Press the top of the switch to turn the feature on. The seat will heat to the high setting. The indicator light above the switch will be lit next to the number 2.

Press the top of the switch again to go to the low heat setting. The indicator light will be lit next to the number 1.

Press the bottom of the switch to turn the feature off.

Reclining Seatbacks

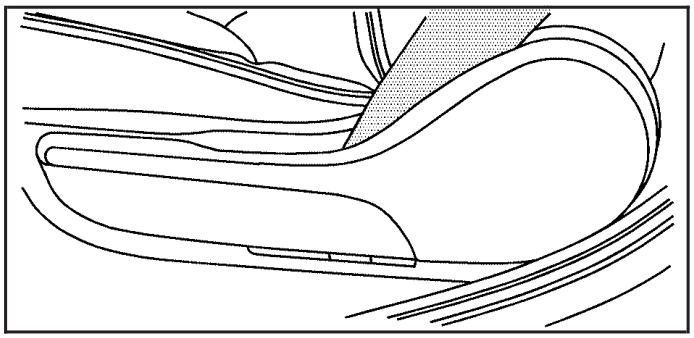

4-door Model Shown, 2-door Model Similar

To adjust the seatback, lift the lever located on the outboard side of the seat and move the seatback to the desired position. Release the lever to lock the seatback. Pull up on the lever without pushing on the seatback, and the seatback will return to the upright position.

Downloaded from www.Manualslib.com manuals search engine

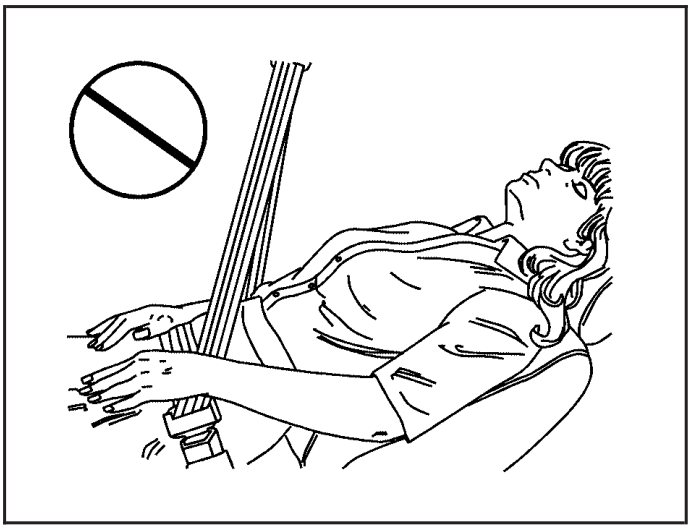

But do not have a seatback reclined if your vehicle is moving.

⚠ CAUTION:

Sitting in a reclined position when your vehicle is in motion can be dangerous. Even if you buckle up, your safety belts cannot do their job when you are reclined like this.

The shoulder belt cannot do its job because it will not be against your body. Instead, it will be in front of you. In a crash you could go into it, receiving neck or other injuries.

The lap belt cannot do its job either. In a crash the belt could go up over your abdomen. The belt forces would be there, not at your pelvic bones. This could cause serious internal injuries.

For proper protection when the vehicle is in motion, have the seatback upright. Then sit well back in the seat and wear your safety belt properly.

Downloaded from www.Manualslib.com manuals search engine

Head Restraints

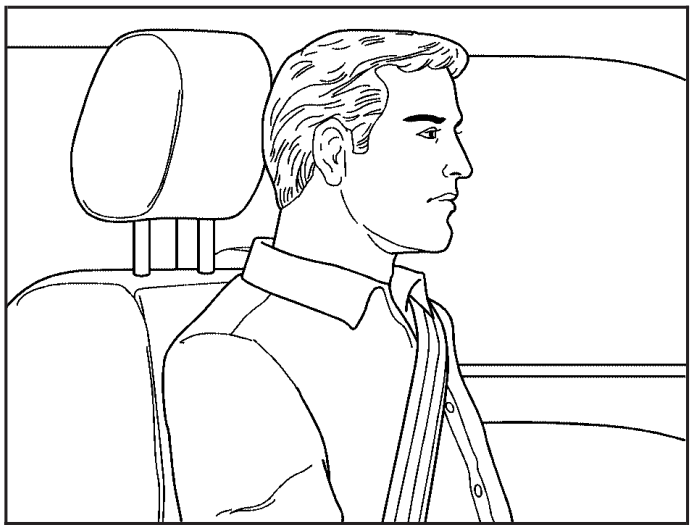

The head restraints on both the front and rear seats are adjustable. Press the button on the side of the post to adjust the head restraint. Slide the head restraint up or down so that the top of the restraint is closest to the top of your head. This position reduces the chance of a neck injury in a crash.

Easy Entry Seat

⚠ CAUTION:

If the easy entry right front seat is not locked, it can move. In a sudden stop or crash, the person sitting there could be injured. After you have used it, be sure to push rearward on an easy entry seat to be sure it is locked.

Downloaded from www.Manualslib.com manuals search engine

⚠ CAUTION:

If the seatback is not locked, it could move forward in a sudden stop or crash. That could cause injury to the person sitting there. Always press rearward on the seatback to be sure it is locked.

If your vehicle is a two-door model, the front passenger seat makes it easier to get in and out of the rear seat.

To use the easy entry seat, do the following:

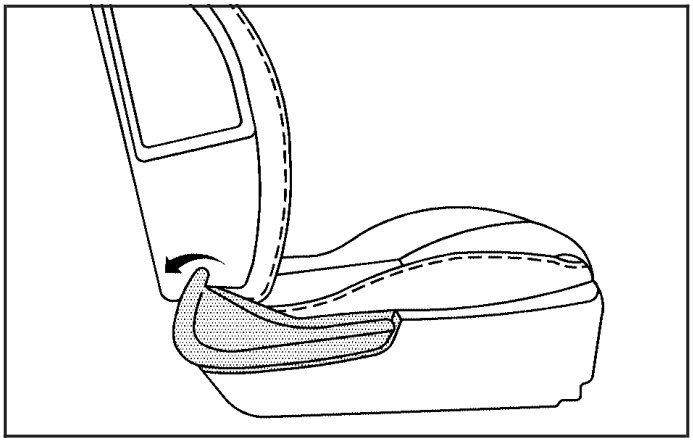

1. Pull back on the top of the recliner lever. The seatback will move forward.

Downloaded from www.Manualslib.com manuals search engine

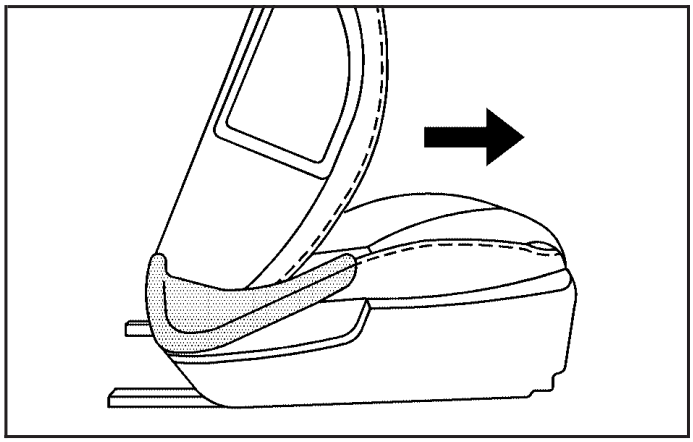

2. Slide the seat forward.
3. Move the seatback to its original position after the passenger enters the rear seat area.
4. Move the seat rearward until it locks into place. Make sure both the seat and seatback are locked.

Power Lift Seat

Your vehicle may have this feature. First move the seat forward or rearward to where you want it. See *Manual Seats on page 1-2*.

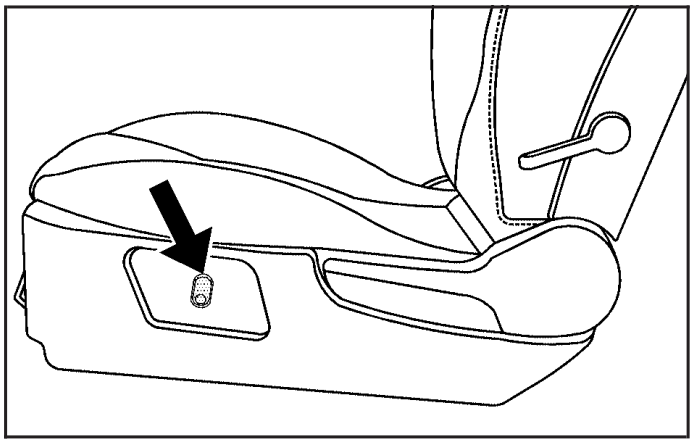

The power lift seat switch is located on the outboard side of the driver's seat. To raise or lower the seat, press the top or bottom of the switch.

Downloaded from www.Manualslib.com manuals search engine

Rear Seats

60/40 Split Bench Seat (Sedan and Coupe)

Folding the Seatback

To fold down the rear seatback, do the following:

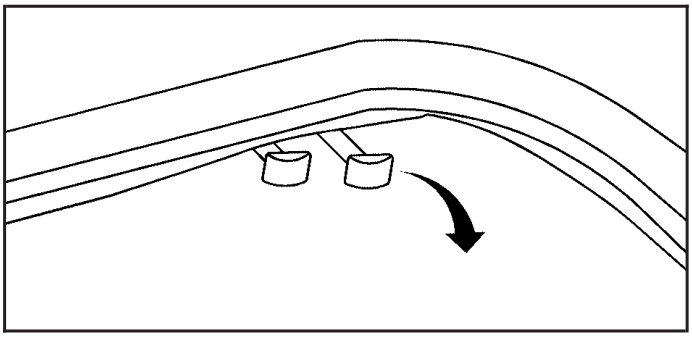

1. The handles that are used to lower the rear seatbacks are located on the upper edge of the trunk opening. Open the trunk. Pull the driver's side handle to open the larger side of the seatback. Pull the passenger's side handle to open the smaller side of the seatback.
2. Fold the seatback down from inside the vehicle.

⚠ CAUTION:

If the seatback is not locked, it could move forward in a sudden stop or crash. That could cause injury to the person sitting there. Always press rearward on the seatback to be sure it is locked.

⚠ CAUTION:

A safety belt that is improperly routed, not properly attached, or twisted will not provide the protection needed in a crash. The person wearing the belt could be seriously injured. After raising the rear seatback, always check to be sure that the safety belts are properly routed and attached, and are not twisted.

To return the seatback to the upright position, push up the seatback until you hear a click. Then pull on the seatback to make sure it is secure.

Downloaded from www.Manualslib.com manuals search engine

Safety Belts

Safety Belts: They Are for Everyone

This part of the manual tells you how to use safety belts properly. It also tells you some things you should not do with safety belts.

⚠ CAUTION:

Do not let anyone ride where he or she cannot wear a safety belt properly. If you are in a crash and you are not wearing a safety belt, your injuries can be much worse. You can hit things inside the vehicle or be ejected from it. You can be seriously injured or killed. In the same crash, you might not be, if you are buckled up. Always fasten your safety belt, and check that your passengers' belts are fastened properly too.

⚠ CAUTION:

It is extremely dangerous to ride in a cargo area, inside or outside of a vehicle. In a collision, people riding in these areas are more likely to be seriously injured or killed. Do not allow people to ride in any area of your vehicle that is not equipped with seats and safety belts. Be sure everyone in your vehicle is in a seat and using a safety belt properly.

Your vehicle has indicators to remind you and your passengers to buckle your safety belts. See *Safety Belt Reminder Light on page 3-32* and *Passenger Safety Belt Reminder Light on page 3-32*.

Downloaded from www.Manualslib.com manuals search engine

In most states and in all Canadian provinces, the law says to wear safety belts. Here is why: *They work*.

You never know if you will be in a crash. If you do have a crash, you do not know if it will be a bad one.

A few crashes are mild, and some crashes can be so serious that even buckled up, a person would not survive. But most crashes are in between. In many of them, people who buckle up can survive and sometimes walk away. Without belts they could have been badly hurt or killed.

After more than 30 years of safety belts in vehicles, the facts are clear. In most crashes buckling up does matter...a lot!

Why Safety Belts Work

When you ride in or on anything, you go as fast as it goes.

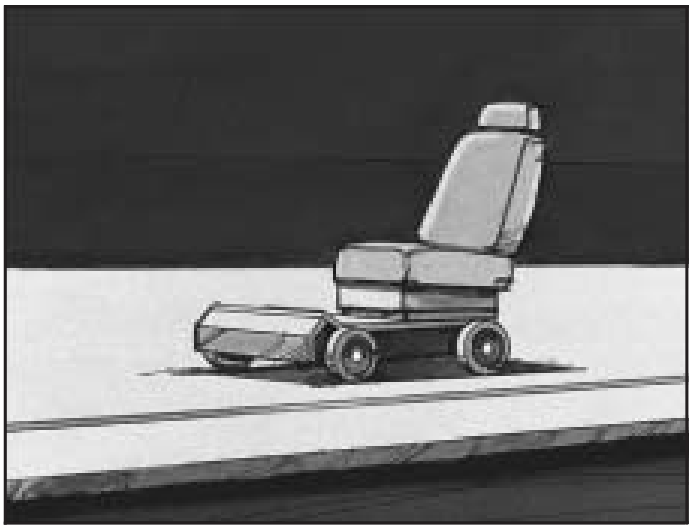

Take the simplest vehicle. Suppose it is just a seat on wheels.

Downloaded from www.Manualslib.com manuals search engine

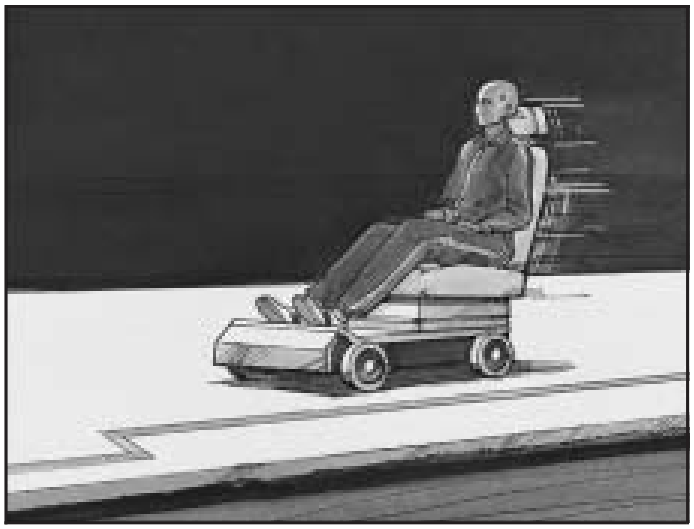

Put someone on it.

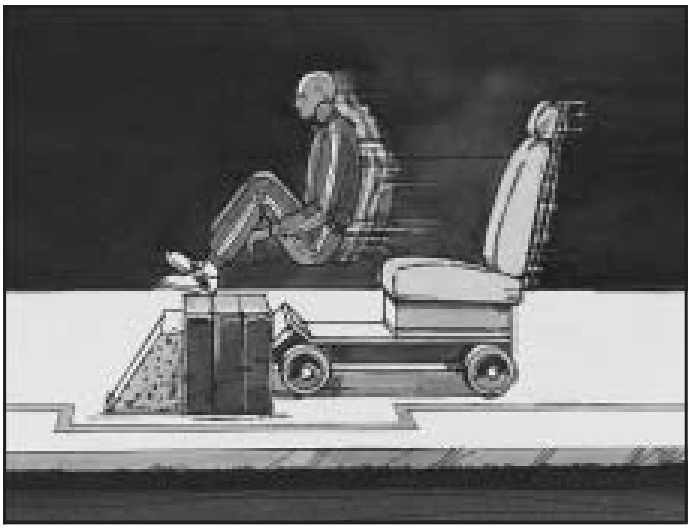

Get it up to speed. Then stop the vehicle. The rider does not stop.

Downloaded from www.Manualslib.com manuals search engine

The person keeps going until stopped by something. In a real vehicle, it could be the windshield...

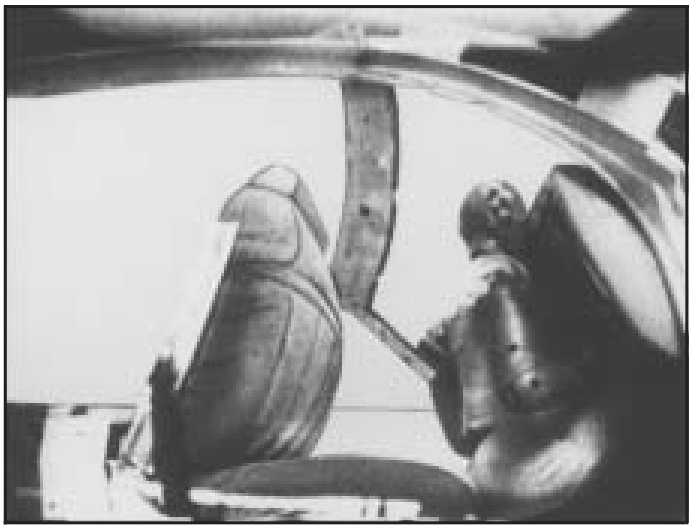

or the instrument panel...

Downloaded from www.Manualslib.com manuals search engine

or the safety belts!

With safety belts, you slow down as the vehicle does. You get more time to stop. You stop over more distance, and your strongest bones take the forces. That is why safety belts make such good sense.

Questions and Answers About Safety Belts

Q: Will I be trapped in the vehicle after an accident if I am wearing a safety belt?

A: You *could* be — whether you are wearing a safety belt or not. But you can unbuckle a safety belt, even if you are upside down. And your chance of being conscious during and after an accident, so you *can* unbuckle and get out, is *much* greater if you are belted.

Q: If my vehicle has airbags, why should I have to wear safety belts?

A: Airbags are in many vehicles today and will be in most of them in the future. But they are supplemental systems only; so they work *with* safety belts — not instead of them. Every airbag system ever offered for sale has required the use of safety belts. Even if you are in a vehicle that has airbags, you still have to buckle up to get the most protection. That is true not only in frontal collisions, but especially in side and other collisions.

Downloaded from www.Manualslib.com manuals search engine

Q: If I am a good driver, and I never drive far from home, why should I wear safety belts?

A: You may be an excellent driver, but if you are in an accident — even one that is not your fault — you and your passengers can be hurt. Being a good driver does not protect you from things beyond your control, such as bad drivers.

Most accidents occur within 25 miles (40 km) of home. And the greatest number of serious injuries and deaths occur at speeds of less than 40 mph (65 km/h).

Safety belts are for everyone.

How to Wear Safety Belts Properly

This part is only for people of adult size.

Be aware that there are special things to know about safety belts and children. And there are different rules for smaller children and babies. If a child will be riding in your vehicle, see *Older Children on page 1-30* or *Infants and Young Children on page 1-33*. Follow those rules for everyone's protection.

First, you will want to know which restraint systems your vehicle has.

We will start with the driver position.

Driver Position

Lap-Shoulder Belt

The driver has a lap-shoulder belt. Here is how to wear it properly.

1. Close and lock the door.
2. Adjust the seat so you can sit up straight. To see how, see "Seats" in the Index.

Downloaded from www.Manualslib.com manuals search engine

3. If your vehicle has a retractable hardtop or is a coupe, and the safety belt is not routed through the guide on the head restraint, slide the edge of the belt webbing through the opening on the guide. Be sure the belt is not twisted.

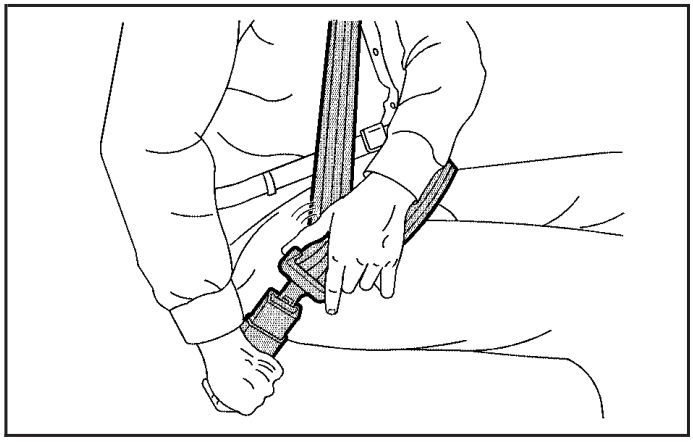

4. Pick up the latch plate and pull the belt across you. Do not let it get twisted.

   The shoulder belt may lock if you pull the belt across you very quickly. If this happens, let the belt go back slightly to unlock it. Then pull the belt across you more slowly.

5. Push the latch plate into the buckle until it clicks.

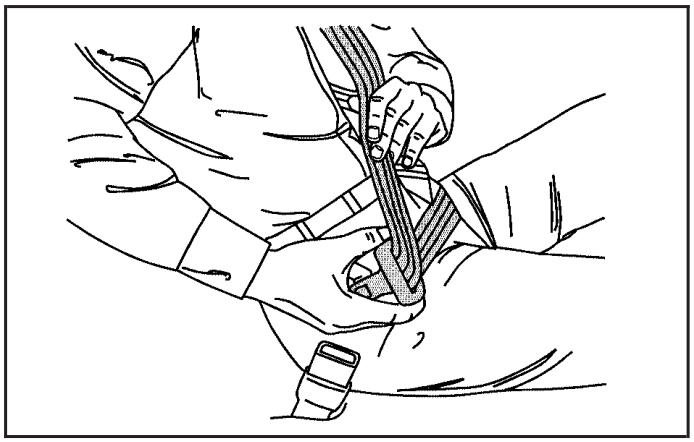

   If the belt stops before it reaches the buckle, tilt the latch plate and keep pulling until you can buckle the belt.

   Pull up on the latch plate to make sure it is secure. If the belt is not long enough, see *Safety Belt Extender on page 1-29*.

   Make sure the release button on the buckle is positioned so you would be able to unbuckle the safety belt quickly if you ever had to.

6. If your vehicle is a sedan, move the shoulder belt height adjuster to the height that is right for you. See *Shoulder Belt Height Adjustment (Sedan Only) on page 1-22*.

Downloaded from www.Manualslib.com manuals search engine

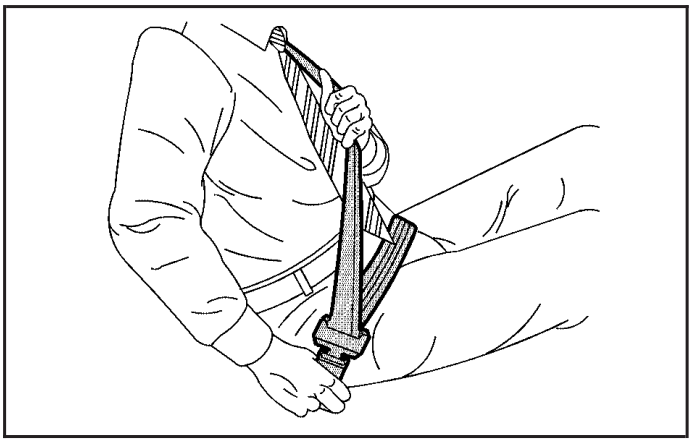

7. To make the lap part tight, pull down on the buckle end of the belt as you pull up on the shoulder belt.

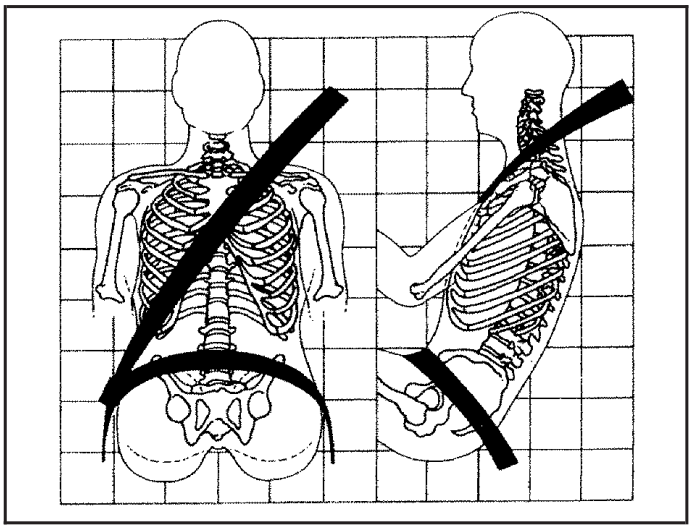

The lap part of the belt should be worn low and snug on the hips, just touching the thighs. In a crash, this applies force to the strong pelvic bones. And you would be less likely to slide under the lap belt. If you slid under it, the belt would apply force at your abdomen. This could cause serious or even fatal injuries. The shoulder belt should go over the shoulder and across the chest. These parts of the body are best able to take belt restraining forces.

The safety belt locks if there is a sudden stop or crash, or if you pull the belt very quickly out of the retractor.

Downloaded from www.Manualslib.com manuals search engine

Q: What is wrong with this?

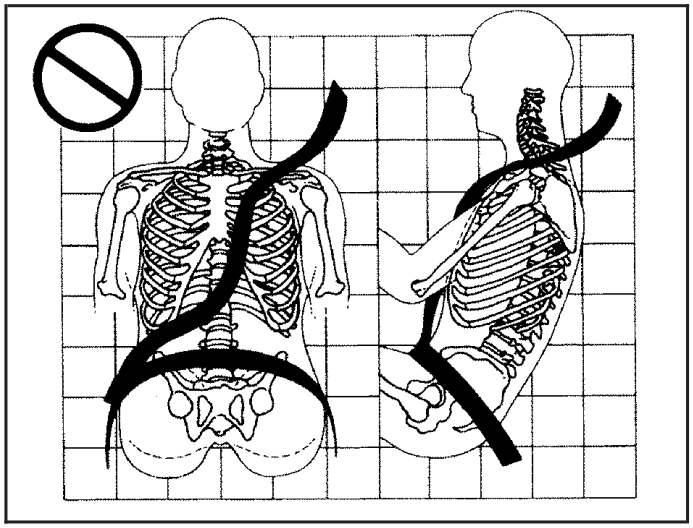

A: The shoulder belt is too loose. It will not give nearly as much protection this way.

⚠ CAUTION:

You can be seriously hurt if your shoulder belt is too loose. In a crash, you would move forward too much, which could increase injury. The shoulder belt should fit against your body.

Downloaded from www.Manualslib.com manuals search engine

Q: What is wrong with this?

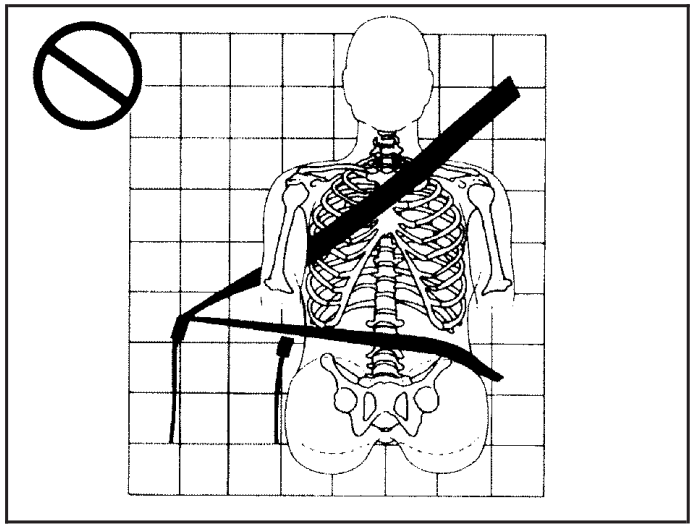

A: The belt is buckled in the wrong place.

⚠ CAUTION:

You can be seriously injured if your belt is buckled in the wrong place like this. In a crash, the belt would go up over your abdomen. The belt forces would be there, not at the pelvic bones. This could cause serious internal injuries. Always buckle your belt into the buckle nearest you.

Downloaded from www.Manualslib.com manuals search engine

Q: **What is wrong with this?**

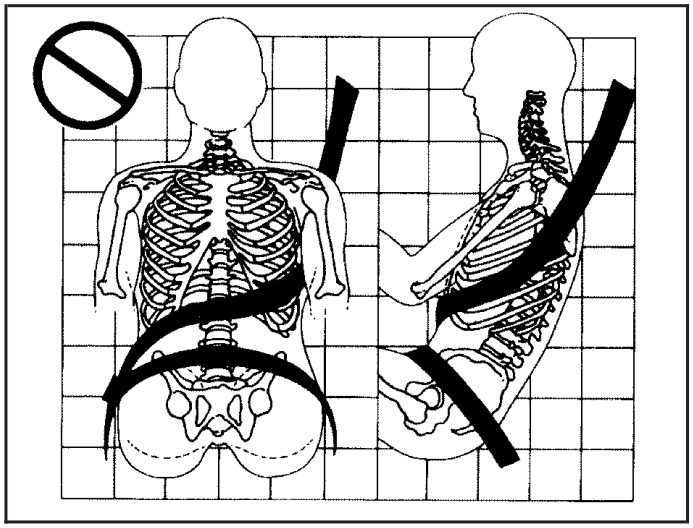

A: The shoulder belt is worn under the arm. It should be worn over the shoulder at all times.

⚠ CAUTION:

You can be seriously injured if you wear the shoulder belt under your arm. In a crash, your body would move too far forward, which would increase the chance of head and neck injury. Also, the belt would apply too much force to the ribs, which are not as strong as shoulder bones. You could also severely injure internal organs like your liver or spleen.

Downloaded from www.Manualslib.com manuals search engine

Q: What is wrong with this?

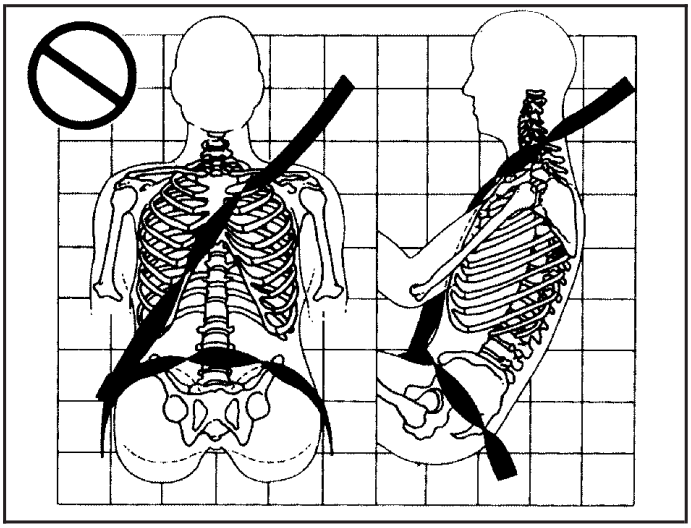

A: The belt is twisted across the body.

⚠ CAUTION:

You can be seriously injured by a twisted belt. In a crash, you would not have the full width of the belt to spread impact forces. If a belt is twisted, make it straight so it can work properly, or ask your dealer to fix it.

Downloaded from www.Manualslib.com manuals search engine

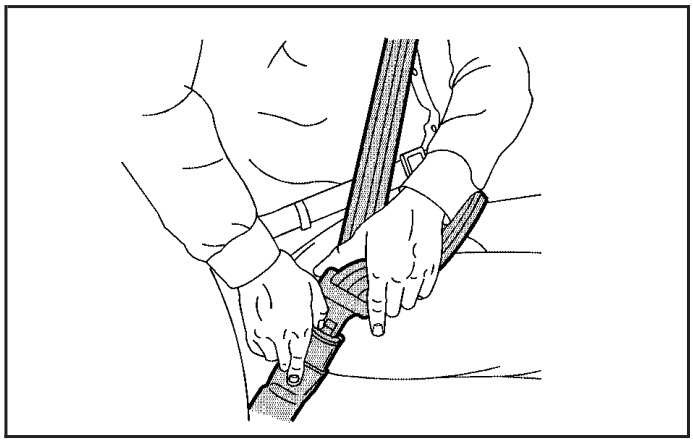

To unlatch the belt, just push the button on the buckle. The belt should go back out of the way.

Before you close the door, be sure the belt is out of the way. If you slam the door on it, you can damage both the belt and your vehicle.

Shoulder Belt Height Adjustment (Sedan Only)

Before you begin to drive, move the shoulder belt adjuster to the height that is right for you.

To move it down, push down the release button (A) and move the height adjuster to the desired position. You can move the adjuster up by pushing the release button up. After you move the adjuster to where you want it, try to move it without pushing the release button to make sure it has locked into position.

Adjust the height so that the shoulder portion of the belt is centered on your shoulder. The belt should be away from your face and neck, but not falling off your shoulder.

Downloaded from www.Manualslib.com manuals search engine

Safety Belt Use During Pregnancy

Safety belts work for everyone, including pregnant women. Like all occupants, they are more likely to be seriously injured if they do not wear safety belts.

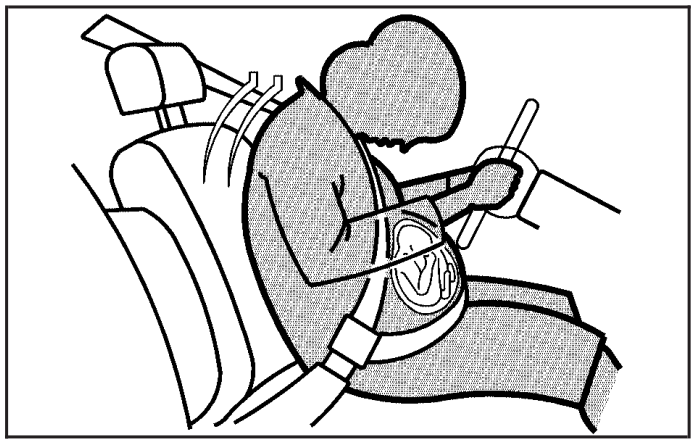

A pregnant woman should wear a lap-shoulder belt, and the lap portion should be worn as low as possible, below the rounding, throughout the pregnancy.

The best way to protect the fetus is to protect the mother. When a safety belt is worn properly, it is more likely that the fetus will not be hurt in a crash. For pregnant women, as for anyone, the key to making safety belts effective is wearing them properly.

Right Front Passenger Position

To learn how to wear the right front passenger's safety belt properly, see *Driver Position on page 1-15*.

The right front passenger's safety belt works the same way as the driver's safety belt — except for the following.

If you ever pull the shoulder portion of the belt out all the way, you will engage the child restraint locking feature. If this happens, just let the belt go back all the way and start again.

When the safety belt is not in use, slide the latch plate up the safety belt webbing. The latch plate should rest on the stitching on the safety belt, near the guideloop.

Rear Seat Passengers

It is very important for rear seat passengers to buckle up! Accident statistics show that unbelted people in the rear seat are hurt more often in crashes than those who are wearing safety belts.

Rear passengers who are not safety belted can be thrown out of the vehicle in a crash. And they can strike others in the vehicle who are wearing safety belts.

Downloaded from www.Manualslib.com manuals search engine

Lap-Shoulder Belt

The rear seat positions have lap-shoulder belts. Here is how to wear one properly.

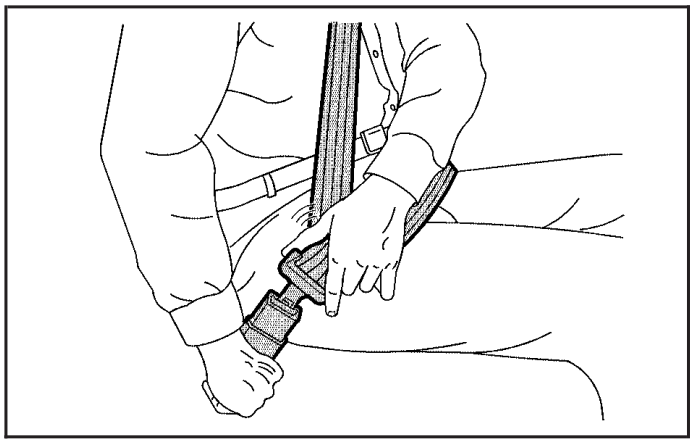

1. Pick up the latch plate and pull the belt across you. Do not let it get twisted.

   The shoulder belt may lock if you pull the belt across you very quickly. If this happens, let the belt go back slightly to unlock it. Then pull the belt across you more slowly.

2. Push the latch plate into the buckle until it clicks.

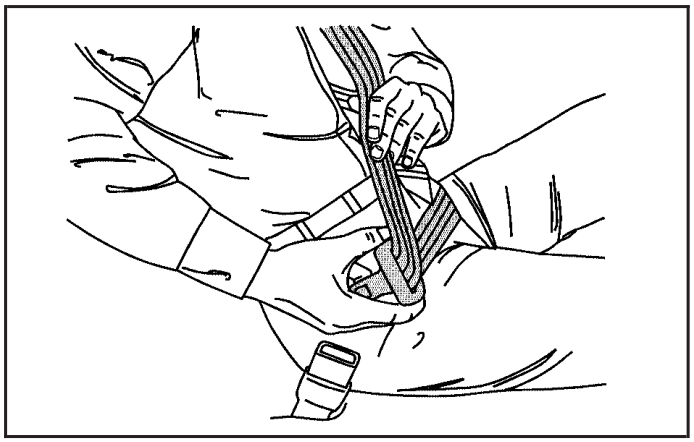

If the belt stops before it reaches the buckle, tilt the latch plate and keep pulling until you can buckle it.

Pull up on the latch plate to make sure it is secure.

When the shoulder belt is pulled out all the way, it will lock. If it does, let it go back all the way and start again.

If the belt is not long enough, see *Safety Belt Extender on page 1-29*.

Make sure the release button on the buckle is positioned so you would be able to unbuckle the safety belt quickly if you ever had to.

Downloaded from www.Manualslib.com manuals search engine

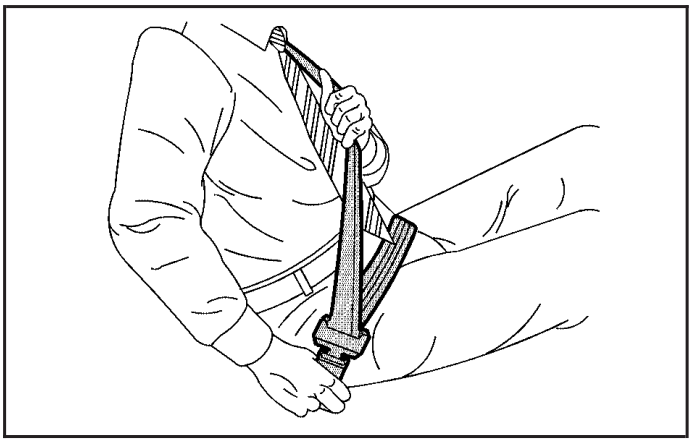

3. To make the lap part tight, pull down on the buckle end of the belt as you pull up on the shoulder part.

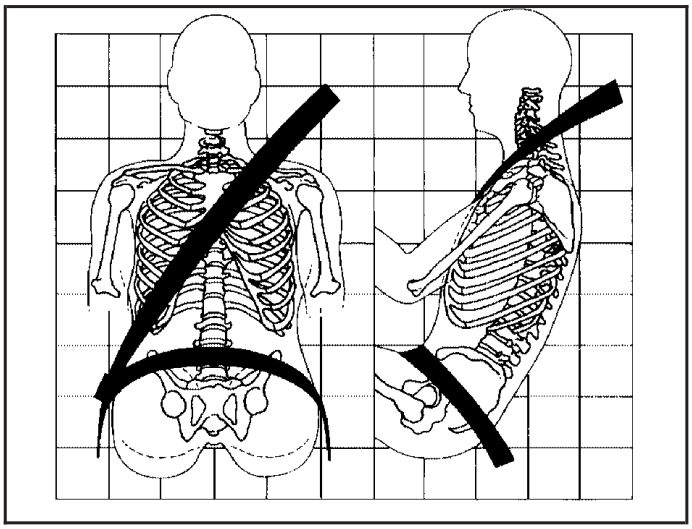

The lap part of the belt should be worn low and snug on the hips, just touching the thighs. In a crash, this applies force to the strong pelvic bones. And you would be less likely to slide under the lap belt. If you slid under it, the belt would apply force at your abdomen. This could cause serious or even fatal injuries. The shoulder belt should go over the shoulder and across the chest. These parts of the body are best able to take belt restraining forces.

The safety belt locks if there is a sudden stop or a crash, or if you pull the belt very quickly out of the retractor.

Downloaded from www.Manualslib.com manuals search engine

⚠ CAUTION:

You can be seriously hurt if your shoulder belt is too loose. In a crash, you would move forward too much, which could increase injury. The shoulder belt should fit against your body.

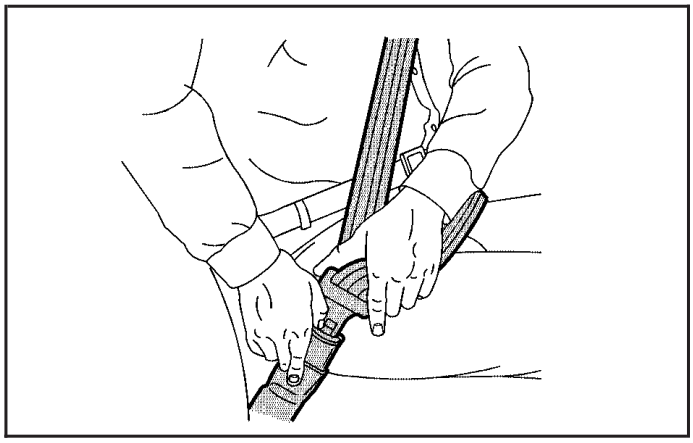

To unlatch the belt, push the button on the buckle.

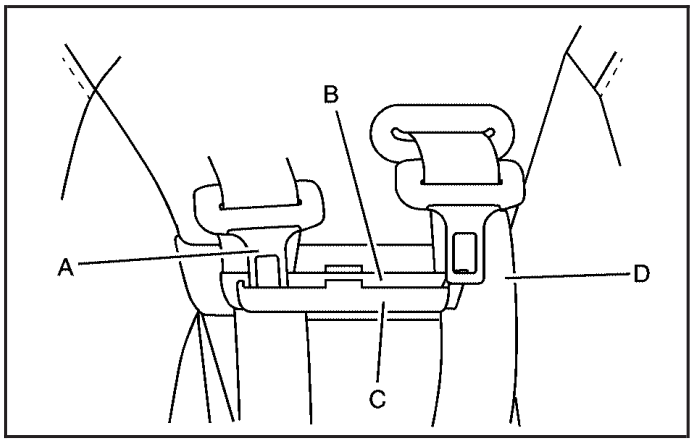

If your vehicle has a retractable hardtop, secure the safety belt latch plate when the hardtop is down and the safety belt is not in use. To do this, slide the safety belt webbing (D) behind the belt webbing retaining clip (B) and slide the latch (A) into the latch retainting clip (C).

Downloaded from www.Manualslib.com manuals search engine

Rear Safety Belt Comfort Guides (Sedan and Coupe Only)

Rear shoulder belt comfort guides may provide added safety belt comfort for older children who have outgrown booster seats and for some adults. When installed on a shoulder belt, the comfort guide positions the belt away from the neck and head.

There is one guide for each outboard passenger position in the rear seat. Here is how to install a comfort guide and use the safety belt:

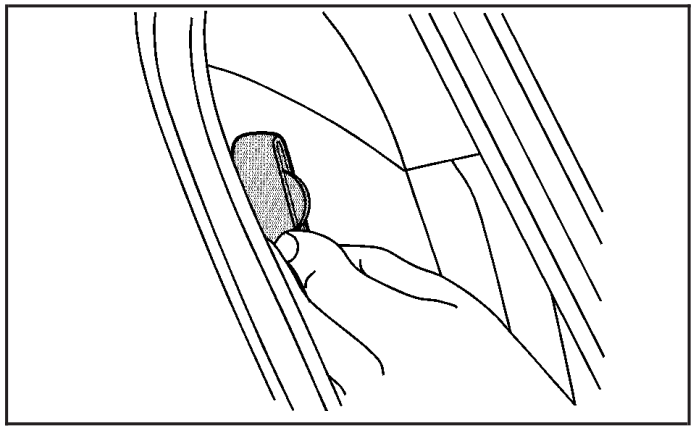

1. Pull the elastic cord out from between the edge of the seatback and the interior body to remove the guide from its storage clip.

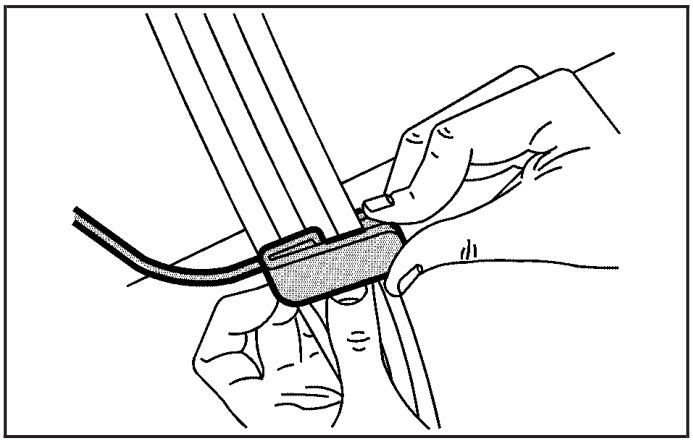

2. Slide the guide under and past the belt. The elastic cord must be under the belt. Then, place the guide over the belt, and insert the two edges of the belt into the slots of the guide.

Downloaded from www.Manualslib.com manuals search engine

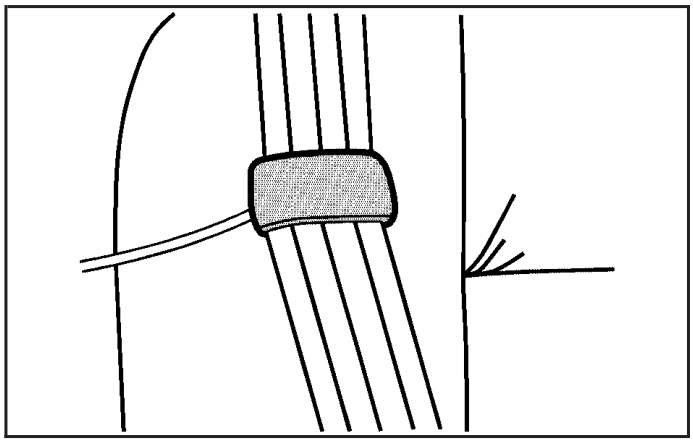

3. Be sure that the belt is not twisted and it lies flat. The elastic cord must be under the belt and the guide on top.

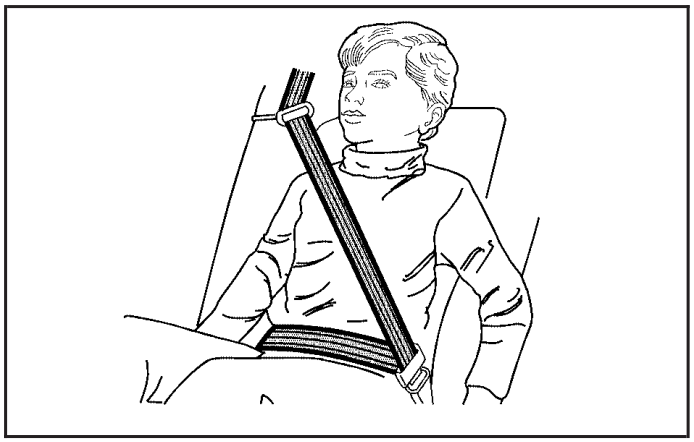

⚠ CAUTION:

A safety belt that is not properly worn may not provide the protection needed in a crash. The person wearing the belt could be seriously injured. The shoulder belt should go over the shoulder and across the chest. These parts of the body are best able to take belt restraining forces.

Downloaded from www.Manualslib.com manuals search engine

4. Buckle, position, and release the safety belt as described in *Rear Seat Passengers on page 1-23*. Make sure that the shoulder belt crosses the shoulder.

To remove and store the comfort guides, squeeze the belt edges together so that you can take them out of the guides. Pull the guide upward to expose its storage clip, and then slide the guide onto the clip. Turn the guide and clip inward and slide them in between the seatback and the interior body, leaving only the loop of the elastic cord exposed.

Safety Belt Pretensioners

Your vehicle has safety belt pretensioners for the driver and right front passenger. Although you cannot see them, they are located on the retractor part of the safety belts. They help the safety belts reduce a person's forward movement in a moderate to severe frontal or near frontal crash.

Pretensioners work only once. If they activate in a crash, you will need to get new ones, and probably other new parts for your safety belt system. See *Replacing Restraint System Parts After a Crash on page 1-72*.

Safety Belt Extender

If the vehicle's safety belt will fasten around you, you should use it.

But if a safety belt is not long enough, your dealer will order you an extender. It is free. When you go in to order it, take the heaviest coat you will wear, so the extender will be long enough for you. To help avoid personal injury, do not let someone else use it, and use it only for the seat it is made to fit. The extender has been designed for adults. Never use it for securing child seats. To wear it, just attach it to the regular safety belt. For more information, see the instruction sheet that comes with the extender.

Downloaded from www.Manualslib.com manuals search engine

Child Restraints

Older Children

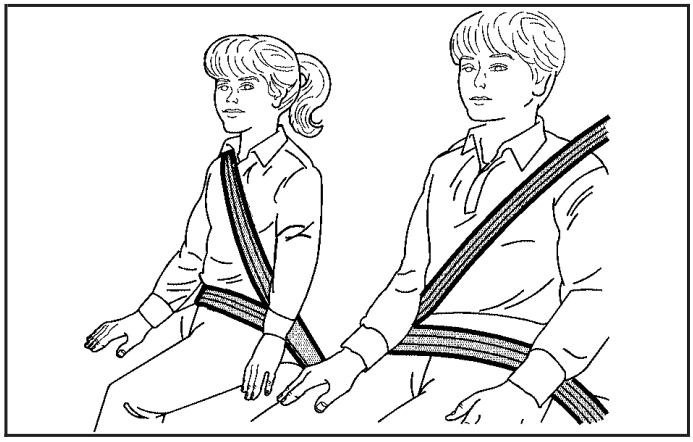

Older children who have outgrown booster seats should wear the vehicle's safety belts.

Q: What is the proper way to wear safety belts?

A: An older child should wear a lap-shoulder belt and get the additional restraint a shoulder belt can provide. The shoulder belt should not cross the face or neck. The lap belt should fit snugly below the hips, just touching the top of the thighs. It should never be worn over the abdomen, which could cause severe or even fatal internal injuries in a crash.

Accident statistics show that children are safer if they are restrained in the rear seat.

In a crash, children who are not buckled up can strike other people who are buckled up, or can be thrown out of the vehicle. Older children need to use safety belts properly.

Downloaded from www.Manualslib.com manuals search engine

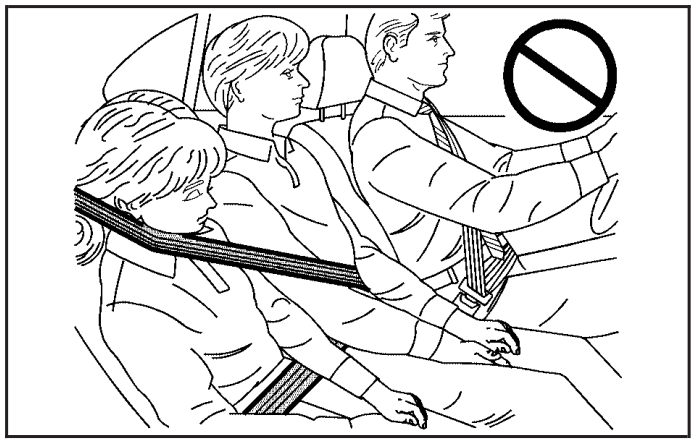

⚠ CAUTION:

Never do this.

Here two children are wearing the same belt. The belt can not properly spread the impact forces. In a crash, the two children can be crushed together and seriously injured. A belt must be used by only one person at a time.

Q: What if a child is wearing a lap-shoulder belt, but the child is so small that the shoulder belt is very close to the child's face or neck?

A: If the child is sitting in a seat next to a window, move the child toward the center of the vehicle. Also see *Rear Safety Belt Comfort Guides (Sedan and Coupe Only) on page 1-27*. If the child is sitting in the center rear seat passenger position, move the child toward the safety belt buckle. In either case, be sure that the shoulder belt still is on the child's shoulder, so that in a crash the child's upper body would have the restraint the belts provide.

Downloaded from www.Manualslib.com manuals search engine

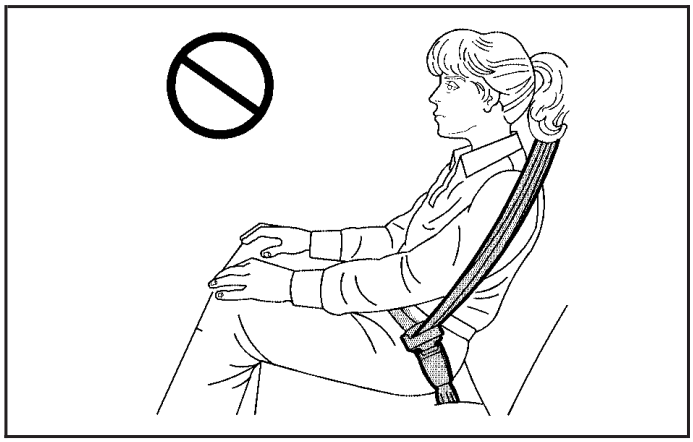

⚠ CAUTION:

Never do this.

Here a child is sitting in a seat that has a lap-shoulder belt, but the shoulder part is behind the child. If the child wears the belt in this way, in a crash the child might slide under the belt. The belt's force would then be applied right on the child's abdomen. That could cause serious or fatal injuries.

Wherever the child sits, the lap portion of the belt should be worn low and snug on the hips, just touching the child's thighs. This applies belt force to the child's pelvic bones in a crash.

Downloaded from www.Manualslib.com manuals search engine

Infants and Young Children

Everyone in a vehicle needs protection! This includes infants and all other children. Neither the distance traveled nor the age and size of the traveler changes the need, for everyone, to use safety restraints. In fact, the law in every state in the United States and in every Canadian province says children up to some age must be restrained while in a vehicle.

Every time infants and young children ride in vehicles, they should have the protection provided by appropriate restraints. Young children should not use the vehicle's adult safety belts alone, unless there is no other choice. Instead, they need to use a child restraint.

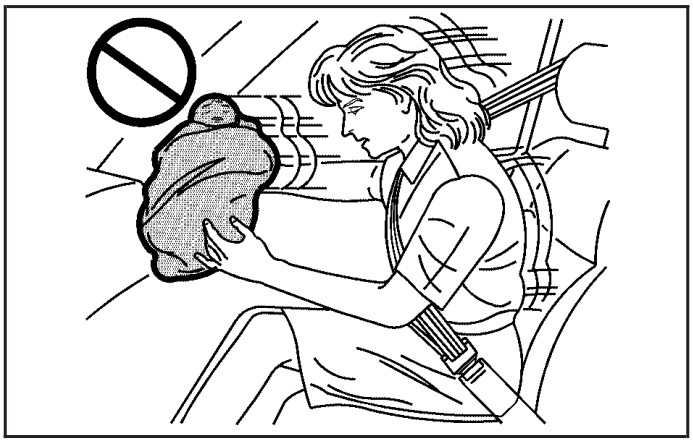

⚠ CAUTION:

People should never hold a baby in their arms while riding in a vehicle. A baby does not weigh much — until a crash. During a crash a baby will become so heavy it is not possible to hold it. For example, in a crash at only 25 mph (40 km/h), a 12 lb (5.5 kg) baby will suddenly become a 240 lb (110 kg) force on a person's arms. A baby should be secured in an appropriate restraint.

Downloaded from www.Manualslib.com manuals search engine

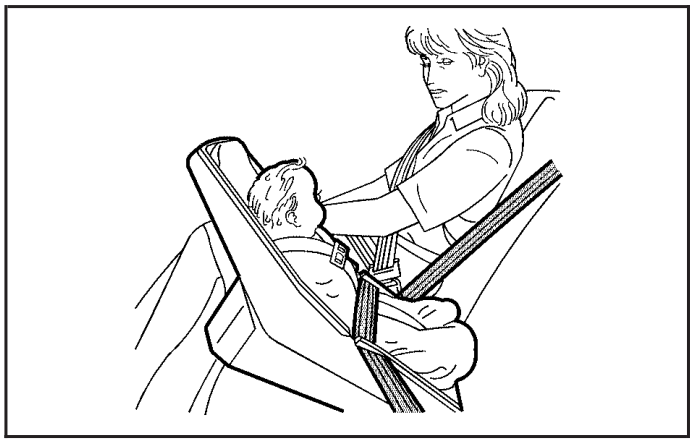

⚠ CAUTION:

Children who are up against, or very close to, any airbag when it inflates can be seriously injured or killed. Airbags plus lap-shoulder belts offer protection for adults and older children, but not for young children and infants. Neither the vehicle's safety belt system nor its airbag system is designed for them. Young children and infants need the protection that a child restraint system can provide.

Q: What are the different types of add-on child restraints?

A: Add-on child restraints, which are purchased by the vehicle's owner, are available in four basic types. Selection of a particular restraint should take into consideration not only the child's weight, height and age but also whether or not the restraint will be compatible with the motor vehicle in which it will be used.

For most basic types of child restraints, there are many different models available. When purchasing a child restraint, be sure it is designed to be used in a motor vehicle. If it is, the restraint will have a label saying that it meets federal motor vehicle safety standards.

The restraint manufacturer's instructions that come with the restraint, state the weight and height limitations for a particular child restraint. In addition, there are many kinds of restraints available for children with special needs.

Downloaded from www.Manualslib.com manuals search engine

⚠ CAUTION:

Newborn infants need complete support, including support for the head and neck. This is necessary because a newborn infant's neck is weak and its head weighs so much compared with the rest of its body. In a crash, an infant in a rear-facing seat settles into the restraint, so the crash forces can be distributed across the strongest part of an infant's body, the back and shoulders. Infants always should be secured in appropriate infant restraints.

⚠ CAUTION:

The body structure of a young child is quite unlike that of an adult or older child, for whom the safety belts are designed. A young child's hip bones are still so small that the vehicle's regular safety belt may not remain low on the hip bones, as it should. Instead, it may settle up around the child's abdomen. In a crash, the belt would apply force on a body area that is unprotected by any bony structure. This alone could cause serious or fatal injuries. Young children always should be secured in appropriate child restraints.

Downloaded from www.Manualslib.com manuals search engine

Child Restraint Systems

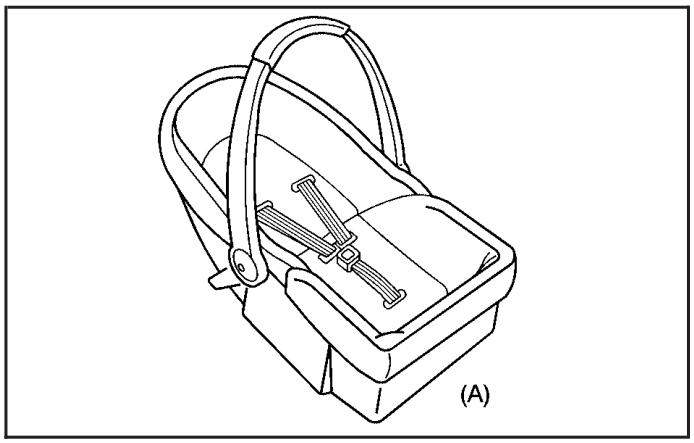

An infant car bed (A), a special bed made for use in a motor vehicle, is an infant restraint system designed to restrain or position a child on a continuous flat surface. Make sure that the infant's head rests toward the center of the vehicle.

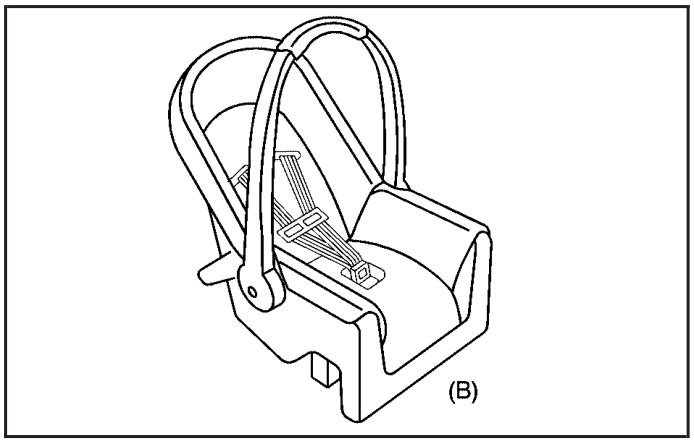

A rear-facing infant seat (B) provides restraint with the seating surface against the back of the infant. The harness system holds the infant in place and, in a crash, acts to keep the infant positioned in the restraint.

Downloaded from www.Manualslib.com manuals search engine

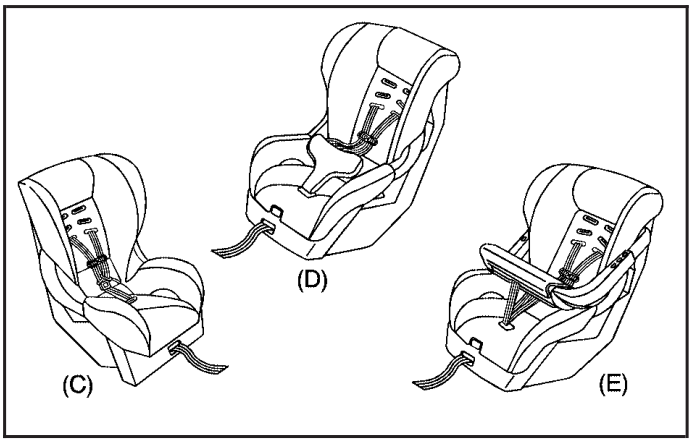

A forward-facing child seat (C-E) provides restraint for the child's body with the harness and also sometimes with surfaces such as T-shaped or shelf-like shields.

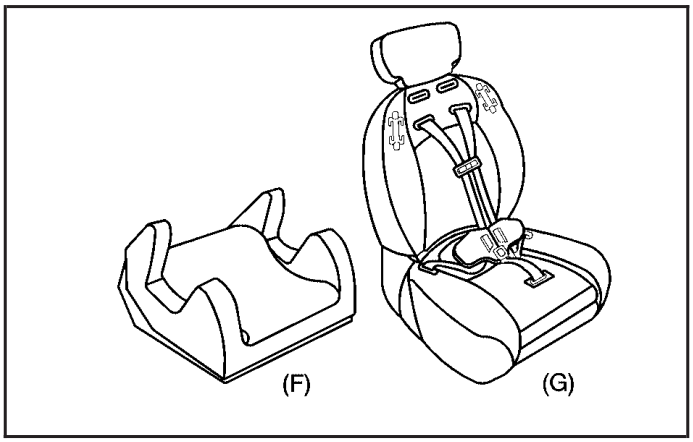

A booster seat (F-G) is a child restraint designed to improve the fit of the vehicle's safety belt system. Some booster seats have a shoulder belt positioner, and some high-back booster seats have a five-point harness. A booster seat can also help a child to see out the window.

Downloaded from www.Manualslib.com manuals search engine

Q: How do child restraints work?

A: A child restraint system is any device designed for use in a motor vehicle to restrain, seat, or position children. A built-in child restraint system is a permanent part of the motor vehicle. An add-on child restraint system is a portable one, which is purchased by the vehicle's owner.

For many years, add-on child restraints have used the adult belt system in the vehicle. To help reduce the chance of injury, the child also has to be secured within the restraint. The vehicle's belt system secures the add-on child restraint in the vehicle, and the add-on child restraint's harness system holds the child in place within the restraint.

One system, the three-point harness, has straps that come down over each of the infant's shoulders and buckle together at the crotch. The five-point harness system has two shoulder straps, two hip straps and a crotch strap. A shield may take the place of hip straps. A T-shaped shield has shoulder straps that are attached to a flat pad which rests low against the child's body. A shelf- or armrest-type shield has straps that are attached to a wide, shelf-like shield that swings up or to the side.

When choosing a child restraint, be sure the child restraint is designed to be used in a vehicle. If it is, it will have a label saying that it meets federal motor vehicle safety standards.

Then follow the instructions for the restraint. You may find these instructions on the restraint itself or in a booklet, or both. These restraints use the belt system or the LATCH (Lower Anchors and Tethers for Children) system in your vehicle, but the child also has to be secured within the restraint to help reduce the chance of personal injury. When securing an add-on child restraint, refer to the instructions that come with the restraint which may be on the restraint itself or in a booklet, or both, and to this manual. The child restraint instructions are important, so if they are not available, obtain a replacement copy from the manufacturer.

Keep in mind that an unsecured child restraint can move around in a collision or sudden stop and injure people in the vehicle. Be sure to properly secure any child restraint in your vehicle – even when no child is in it.

Downloaded from www.Manualslib.com manuals search engine

Where to Put the Restraint

Accident statistics show that children are safer if they are restrained in the rear rather than the front seat. General Motors recommends that child restraints be secured in a rear seat, including an infant riding in a rear-facing infant seat, a child riding in a forward-facing child seat and an older child riding in a booster seat.

Your vehicle has a rear seat that will accommodate a rear-facing child restraint. A label on your sun visor says, “Never put a rear-facing child seat in the front.” This is because the risk to the rear-facing child is so great, if the airbag deploys.

⚠ CAUTION:

A child in a rear-facing child restraint can be seriously injured or killed if the right front passenger’s airbag inflates. This is because the back of the rear-facing child restraint would be very close to the inflating airbag.

CAUTION: (Continued)

CAUTION: (Continued)

Even though the passenger sensing system is designed to turn off the passenger’s frontal airbag if the system detects a rear-facing child restraint, no system is fail-safe, and no one can guarantee that an airbag will not deploy under some unusual circumstance, even though it is turned off. General Motors recommends that rear-facing child restraints be secured in the rear seat, even if the airbag is off.

If you need to secure a forward-facing child restraint in the right front seat, always move the front passenger seat as far back as it will go. It is better to secure the child restraint in a rear seat.

If you need to secure more than one child restraint in the rear seat, review the following illustrations. Depending on where you place the child restraint, you may not be able to access certain safety belt assemblies or LATCH anchors for additional passengers or child restraints.

Downloaded from www.Manualslib.com manuals search engine

Configurations for Use of Child Restraints

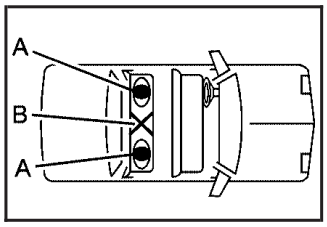

A. Child restraint using LATCH
B. Child restraint or occupant using safety belt

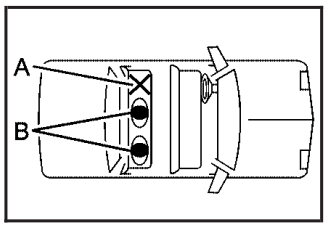

A. Occupant prohibited
B. Child restraint using LATCH

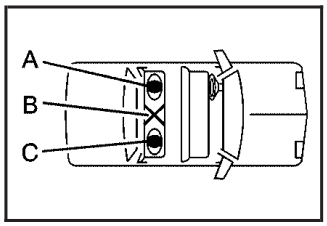

A. Child restraint using LATCH
B. Child restraint or occupant using safety belt
C. Child restraint using safety belt or LATCH or occupant using safety belt

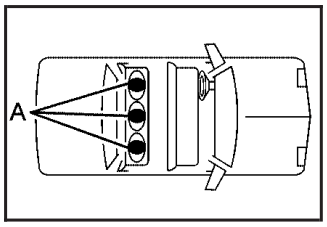

A. Child restraint or occupant using safety belt

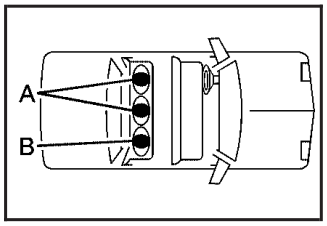

A. Child restraint or occupant using safety belt
B. Child restraint using LATCH

Wherever you install a child restraint, be sure to secure the child restraint properly.

Keep in mind that an unsecured child restraint can move around in a collision or sudden stop and injure people in the vehicle. Be sure to properly secure any child restraint in your vehicle — even when no child is in it.

Downloaded from www.Manualslib.com manuals search engine

Lower Anchors and Tethers for Children (LATCH)

Your vehicle has the LATCH system. The LATCH system holds a child restraint during driving or in a crash. This system is designed to make installation of a child restraint easier. The LATCH system uses anchors in the vehicle and attachments on the child restraint that are made for use with the LATCH system

Make sure that a LATCH-compatible child restraint is properly installed using the anchors, or use the vehicle's safety belts to secure the restraint, following the instructions that came with that restraint, and also the instructions in this manual. When installing a child restraint with a top tether, you must also use either the lower anchors or the safety belts to properly secure the child restraint. A child restraint must never be attached using only the top tether and anchor.

In order to use the LATCH system in your vehicle, you need a child restraint equipped with LATCH attachments. The child restraint manufacturer will provide you with instructions on how to use the child restraint and its attachments. The following explains how to attach a child restraint with these attachments in your vehicle.

Your vehicle has lower anchors and top tether anchors. Your child restraint may have lower attachments and a top tether.

Not all vehicle seating positions or child restraints have lower anchors and attachments or top tether anchors and attachments.

Downloaded from www.Manualslib.com manuals search engine

Lower Anchors

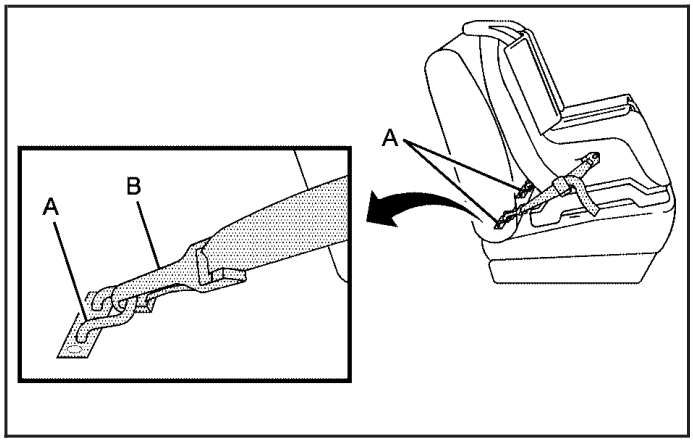

Lower anchors (A) are metal bars built into the vehicle. There are two lower anchors for each LATCH seating position that will accommodate a child restraint with lower attachments (B).

Top Tether Anchor

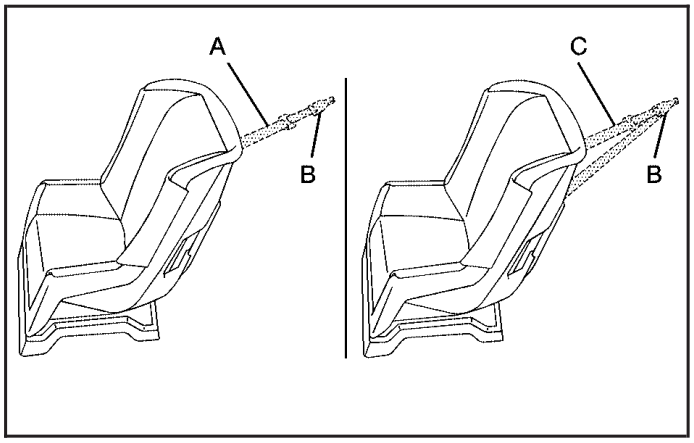

A top tether (A, C) anchors the top of the child restraint to the vehicle. A top tether anchor is built into the vehicle. The top tether attachment (B) on the child restraint connects to the top tether anchor in the vehicle in order to reduce the forward movement and rotation of the child restraint during driving or in a crash.

Downloaded from www.Manualslib.com manuals search engine

Your child restraint may have a single tether (A) or a dual tether (C). Either will have a single attachment (B) to secure the top tether to the anchor.

Some top tether-equipped child restraints are designed for use with or without the top tether being attached. Others require the top tether always to be attached. In Canada, the law requires that forward-facing child restraints have a top tether, and that the tether be attached. In the United States, some child restraints also have a top tether. Be sure to read and follow the instructions for your child restraint.

If the child restraint does not have a top tether, one can be obtained, in kit form, for many child restraints. Ask the child restraint manufacturer whether or not a kit is available.

Lower Anchor and Top Tether Anchor Locations

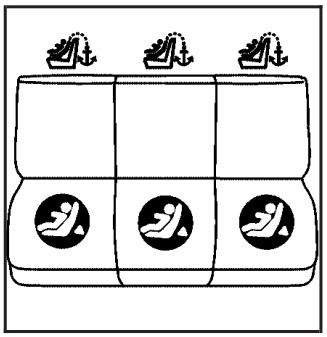

Rear Seat — Sedan

(Lower Anchor): Seating positions with two lower anchors.

(Top Tether Anchor): Seating positions with top tether anchors.

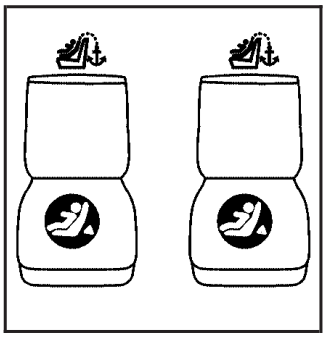

Rear Seat — Coupe

(Lower Anchor): Seating positions with two lower anchors.

(Top Tether Anchor): Seating positions with top tether anchors.

Downloaded from www.Manualslib.com manuals search engine

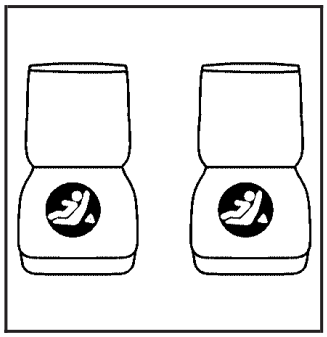

Rear Seat — Retractable Hardtop

(Lower Anchor): Seating positions with two lower anchors.

(Top Tether Anchor): Seating positions with top tether anchors.

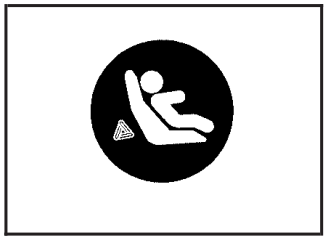

To assist you in locating the lower anchors, each seating position with lower anchors has two labels, near the crease between the seatback and the seat cushion, showing where the anchors are located.

The top tether anchors are located on the rear seatback filler panel. Be sure to use an anchor located on the same side of the vehicle as the seating position where the child restraint will be placed.

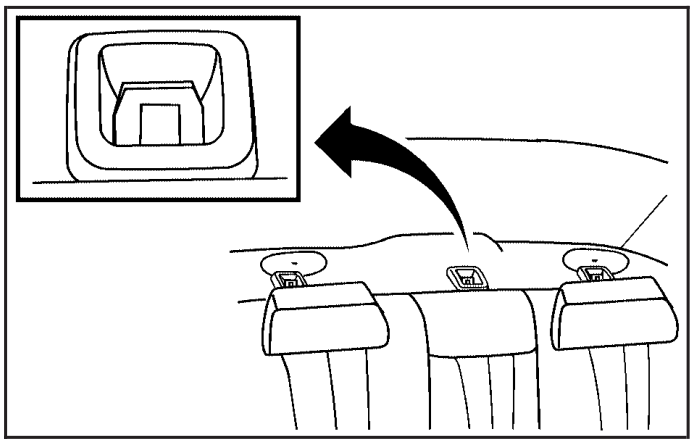

Sedan

Downloaded from www.Manualslib.com manuals search engine

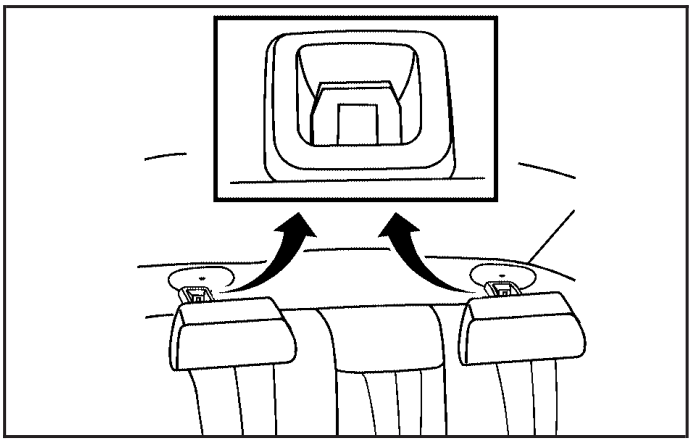

Coupe

Retractable hardtop models do not have top tether anchors in any seating position.

Do not secure a child restraint in the right front passenger's position in a coupe or sedan model or in any position if your vehicle has a retractable hardtop, if a national or local law requires that the top tether be attached, or if the instructions that come with the child restraint say that the top tether must be attached. There is no place to attach the top tether in these positions.

Accident statistics show that children are safer if they are restrained in the rear rather than the front seat. See *Where to Put the Restraint on page 1-39* for additional information.

Downloaded from www.Manualslib.com manuals search engine

Securing a Child Restraint Designed for the LATCH System

⚠ CAUTION:

If a LATCH-type child restraint is not attached to anchors, the restraint will not be able to protect the child correctly. In a crash, the child could be seriously injured or killed. Make sure that a LATCH-type child restraint is properly installed using the anchors, or use the vehicle's safety belts to secure the restraint, following the instructions that came with that restraint, and also the instructions in this manual.

⚠ CAUTION:

Each top tether anchor and lower anchor in the vehicle is designed to hold only one child restraint. Attaching more than one child restraint to a single anchor could cause the anchor or attachment to come loose or even break during a crash. A child or others could be injured if this happens. To help prevent injury to people and damage to your vehicle, attach only one child restraint per anchor.

If you need to secure more than one child restraint in the rear seat, see *Where to Put the Restraint on page 1-39*. Depending on where you place the child restraint, you may not be able to access certain safety belt assemblies or LATCH anchors for additional passengers or child restraints.

Downloaded from www.Manualslib.com manuals search engine

You cannot secure three child restraints using the LATCH anchors in the rear seat at the same time, but you can install two of them. If you want to do this, install one LATCH child restraint in the passenger-side position, and install the other one either in the driver's-side position or in the center position. Refer to the following illustration to learn which anchors to use.

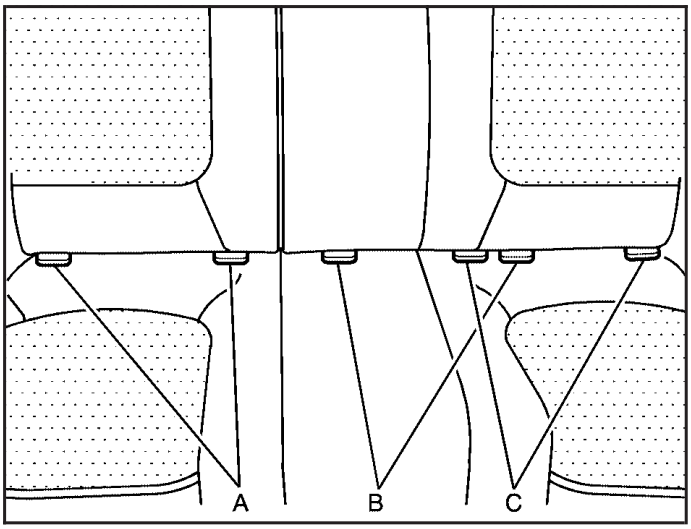

Sedan

A. Passenger's Side Rear Seat Lower Anchors
B. Center Rear Seat Lower Anchors
C. Driver's Side Rear Seat Lower Anchors

Make sure to attach the child restraint at the proper anchor location.

This system is designed to make installation of child restraints easier. When using lower anchors, do not use the vehicle's safety belts. Instead, use the vehicle's anchors and child restraint attachments to secure the restraints. Some restraints also use another vehicle anchor to secure a top tether.

1. Find the lower anchors, if equipped, for the desired seating position.
2. If the desired seating position does not have lower anchors, see *Securing a Child Restraint in a Rear Seat Position on page 1-49* for instructions on installing the child restraint using the safety belts.
3. Put the child restraint on the seat.

Downloaded from www.Manualslib.com manuals search engine

4. Attach and tighten the lower attachments on the child restraint to the lower anchors, if equipped, in the vehicle. The child restraint instructions will show you how.
5. If the child restraint is forward-facing, attach and tighten the top tether, if equipped, to the top tether anchor. Refer to the child restraint instructions and the following steps:
   5.1. Find the top tether anchor.
   5.2. Route and tighten the top tether according to your child restraint instructions and the following instructions:

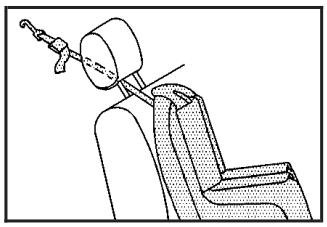

If the position you are using has a head restraint and you are using a single tether, route the tether under the head restraint and in between the head restraint posts.

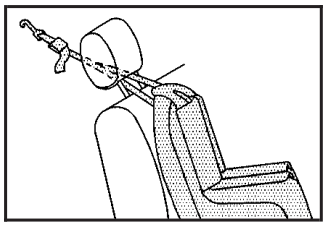

If the position you are using has a head restraint and you are using a dual tether, route the tether under the head restraint and in between the head restraint posts.

If the head restraint is adjustable, pull up on the headrest to access the top tether anchors. If the head restraint is fixed, there should be a gap to route the strap under the head restraint. Do not route the top strap around the head restraint.

6. Push and pull the child restraint in different directions to be sure it is secure.

Downloaded from www.Manualslib.com manuals search engine

Securing a Child Restraint in a Rear Seat Position

If your child restraint is equipped with the LATCH system, see *Lower Anchors and Tethers for Children (LATCH) on page 1-41*.

If your child restraint does not have the LATCH system, you will be using the lap-shoulder belt to secure the child restraint in this position. Be sure to follow the instructions that came with the child restraint. Secure the child in the child restraint when and as the instructions say.

1. Put the child restraint on the seat.
2. Pick up the latch plate, and run the lap and shoulder portions of the vehicle's safety belt through or around the restraint. The child restraint instructions will show you how.

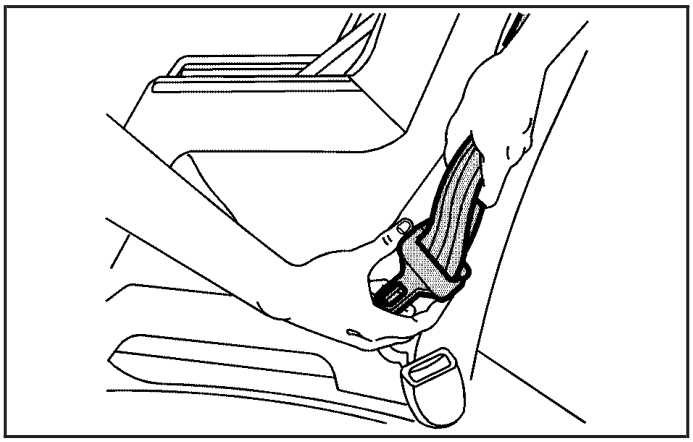

Tilt the latch plate to adjust the belt if needed.

Downloaded from www.Manualslib.com manuals search engine

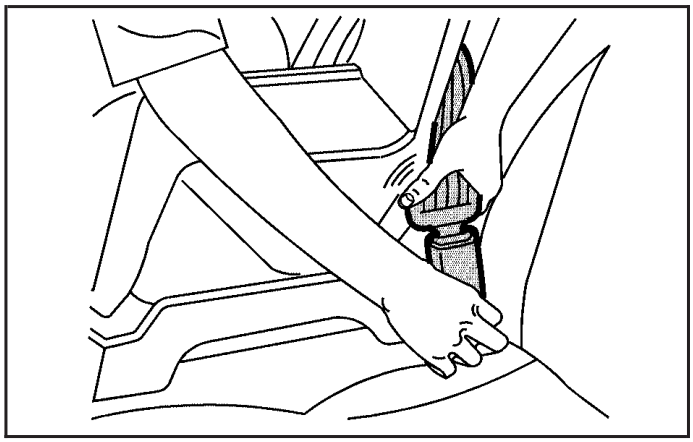

3. Buckle the belt. Make sure the release button is positioned so you would be able to unbuckle the safety belt quickly if you ever had to.

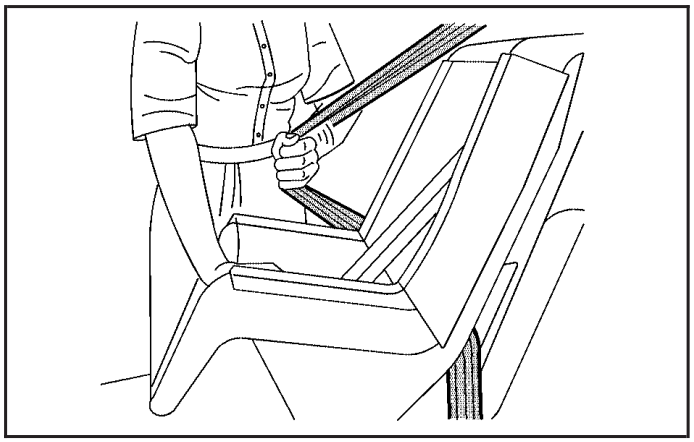

4. Pull the rest of the shoulder belt all the way out of the retractor to set the lock.

Downloaded from www.Manualslib.com manuals search engine

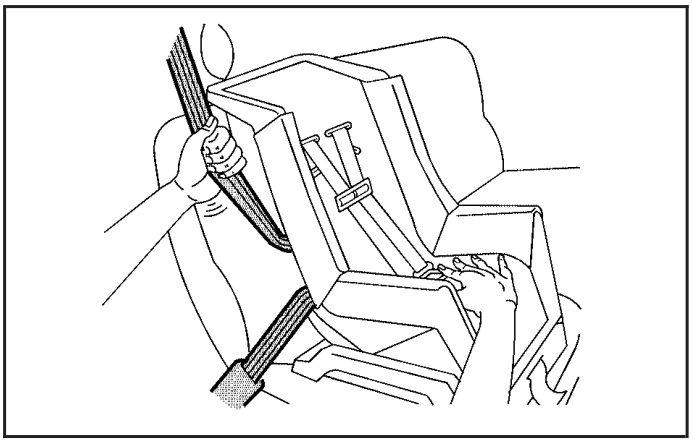

5. To tighten the belt, push down on the child restraint, pull the shoulder portion of the belt to tighten the lap portion of the belt and feed the shoulder belt back into the retractor. If you are using a forward-facing child restraint, you may find it helpful to use your knee to push down on the child restraint as you tighten the belt.
6. If your child restraint has a top tether, attach and tighten the top tether to the top tether anchor. Refer to the instructions that came with the child restraint and to *Lower Anchors and Tethers for Children (LATCH) on page 1-41*.
7. Push and pull the child restraint in different directions to be sure it is secure.

To remove the child restraint, just unbuckle the vehicle's safety belt and let it go back all the way. The safety belt will move freely again and be ready to work for an adult or larger child passenger. If your vehicle has a retractable hardtop, when the hardtop is down and the safety belt is not in use, secure the safety belt latch plate. See *Rear Seat Passengers on page 1-23*.

Downloaded from www.Manualslib.com manuals search engine

Securing a Child Restraint in the Right Front Seat Position

Your vehicle has a right front passenger's airbag. A rear seat is a safer place to secure a forward-facing child restraint. See *Where to Put the Restraint on page 1-39*.

In addition, your vehicle has the passenger sensing system. The passenger sensing system is designed to turn off the right front passenger's frontal airbag when an infant in a rear-facing infant seat or a small child in a forward-facing child restraint or booster seat is detected. See *Passenger Sensing System on page 1-65* and *Passenger Airbag Status Indicator on page 3-34* for more information on this including important safety information.

A label on your sun visor says, "Never put a rear-facing child seat in the front." This is because the risk to the rear-facing child is so great, if the airbag deploys.

⚠ CAUTION:

A child in a rear-facing child restraint can be seriously injured or killed if the right front passenger's airbag inflates. This is because the back of the rear-facing child restraint would be very close to the inflating airbag.

Even though the passenger sensing system is designed to turn off the passenger's frontal airbag if the system detects a rear-facing child restraint, no system is fail-safe, and no one can guarantee that an airbag will not deploy under some unusual circumstance, even though it is turned off. We recommend that rear-facing child restraints be secured in the rear seat, even if the airbag is off.

If you need to secure a forward-facing child restraint in the right front seat position, move the seat as far back as it will go before securing the forward-facing child restraint. See *Manual Seats on page 1-2* or *Power Seat on page 1-3*.

Downloaded from www.Manualslib.com manuals search engine

If your child restraint is equipped with the LATCH system, see *Lower Anchors and Tethers for Children (LATCH) on page 1-41*.

There is no top tether anchor in the right front passenger's position. Do not secure a child seat in this position if a national or local law requires that the top tether be anchored, or if the instructions that come with the child restraint say that the top tether must be anchored. See *Lower Anchors and Tethers for Children (LATCH) on page 1-41* if the child restraint has a top tether.

You will be using the lap-shoulder belt to secure the child restraint in this position. Be sure to follow the instructions that came with the child restraint. Secure the child in the child restraint when and as the instructions say.

1. Your vehicle has a right front passenger's frontal airbag. See *Passenger Sensing System on page 1-65*. General Motors recommends that rear-facing child restraints be secured in a rear seat, even if the airbag is off. If your child restraint is forward-facing, move the seat as far back as it will go before securing the child restraint in this seat. See *Manual Seats on page 1-2* or *Power Seat on page 1-3*.

   When the passenger sensing system has turned off the right front passenger's frontal airbag, the off indicator in the passenger airbag status indicator should light and stay lit when you turn the ignition to ON or START. See *Passenger Airbag Status Indicator on page 3-34*.
2. Put the child restraint on the seat.
3. If your vehicle has retractable hardtop or is a coupe, remove the safety belt from the guide on the head restraint by sliding the webbing through the opening on the guide. Do not secure the child restraint with the safety belt routed through the guide.
4. Pick up the latch plate, and run the lap and shoulder portions of the vehicle's safety belt through or around the restraint. The child restraint instructions will show you how.

Downloaded from www.Manualslib.com manuals search engine

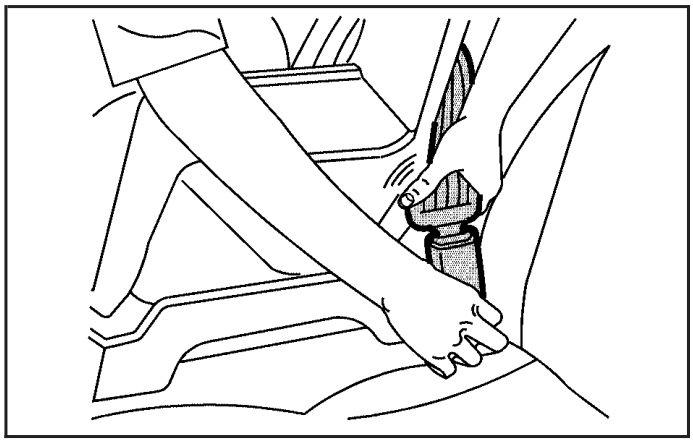

5. Buckle the belt. Make sure the release button is positioned so you would be able to unbuckle the safety belt quickly if you ever had to.

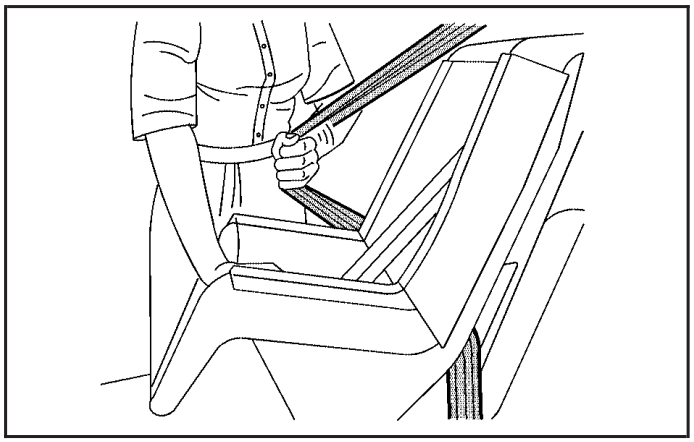

6. Pull the rest of the shoulder belt all the way out of the retractor to set the lock.

Downloaded from www.Manualslib.com manuals search engine

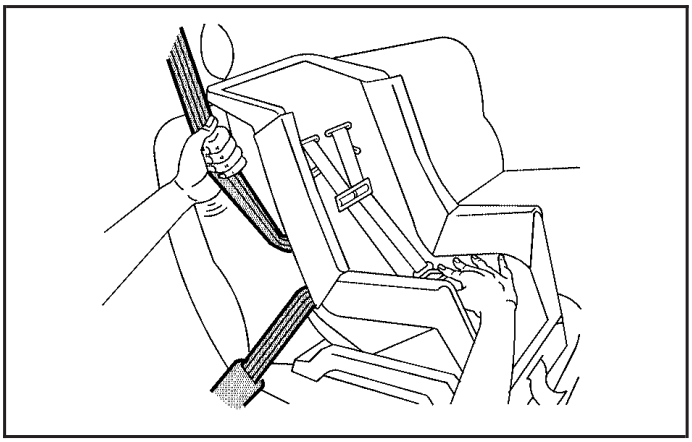

7. To tighten the belt, push down on the child restraint, pull the shoulder portion of the belt to tighten the lap portion of the belt and feed the shoulder belt back into the retractor. If you are using a forward-facing child restraint, you may find it helpful to use your knee to push down on the child restraint as you tighten the belt. You should not be able to pull more of the belt from the retractor once the lock has been set.
8. Push and pull the child restraint in different directions to be sure it is secure.
9. If the airbag is off, the off indicator on the instrument panel will be lit and stay lit when the key is turned to ON or START.

If a child restraint has been installed and the on indicator is lit, turn the vehicle off. Remove the child restraint from the vehicle and reinstall the child restraint.

If after reinstalling the child restraint and restarting the vehicle, the on indicator is still lit, check to make sure that the vehicle's seatback is not pressing the child restraint into the seat cushion. If this happens, slightly recline the vehicle's seatback and adjust the seat cushion if possible. Also make sure the child restraint is not trapped under the vehicle head restraint. If this happens, adjust the head restraint.

If the on indicator is still lit, secure the child in the child restraint in a rear seat position in the vehicle and check with your dealer.

To remove the child restraint, just unbuckle the vehicle's safety belt and let it go back all the way. The safety belt will move freely again and be ready to work for an adult or larger child passenger. If your vehicle has a retractable hardtop or is a coupe, insert the safety belt into the guide on the head restraint by sliding the webbing through the opening on the guide.

Downloaded from www.Manualslib.com manuals search engine

Airbag System

Your vehicle has a frontal airbag for the driver and another frontal airbag for the right front passenger. Your vehicle may also have a seat-mounted side impact airbag for the driver and for the right front passenger. Your vehicle may also have roof mounted side impact airbags. Roof mounted side impact airbags are available for the driver and the passenger seated directly behind the driver and for the right front passenger and the passenger seated directly behind that passenger.

If your vehicle has seat-mounted side impact airbags, the word AIRBAG will appear on the airbag covering on the side of the front seatback closest to the door. If your vehicle has roof-mounted side impact airbags, the word AIRBAG will appear on the airbag covering on the ceiling near the side windows.

Frontal airbags are designed to help reduce the risk of injury from the force of an inflating frontal airbag. But these airbags must inflate very quickly to do their job and comply with federal regulations.

Here are the most important things to know about the airbag system:

⚠ CAUTION:

You can be severely injured or killed in a crash if you are not wearing your safety belt, even if you have airbags. Wearing your safety belt during a crash helps reduce your chance of hitting things inside the vehicle or being ejected from it. Airbags are designed to work with safety belts but do not replace them.

Frontal airbags for the driver and right front passenger are designed to deploy in moderate to severe frontal and near frontal crashes. They are not designed to inflate in rollover, rear or low-speed frontal crashes, or in many side crashes. And, for some unrestrained occupants, frontal airbags may provide less protection in frontal crashes than more forceful airbags have provided in the past.

Side impact airbags are designed to inflate in moderate to severe crashes where something hits the side of your vehicle.

CAUTION: (Continued)

Downloaded from www.Manualslib.com manuals search engine

CAUTION: (Continued)

They are not designed to inflate in frontal, in rollover or in rear crashes.

Everyone in your vehicle should wear a safety belt properly, whether or not there is an airbag for that person.

⚠ CAUTION:

Both frontal and side impact airbags inflate with great force, faster than the blink of an eye. If you are too close to an inflating airbag, as you would be if you were leaning forward, it could seriously injure you. Safety belts help keep you in position for airbag inflation before and during a crash. Always wear your safety belt even with frontal airbags. The driver should sit as far back as possible while still maintaining control of the vehicle. Occupants should not lean on or sleep against the door.

⚠ CAUTION:

Anyone who is up against, or very close to, any airbag when it inflates can be seriously injured or killed. Airbags plus lap-shoulder belts offer the best protection for adults, but not for young children and infants. Neither the vehicle's safety belt system nor its airbag system is designed for them. Young children and infants need the protection that a child restraint system can provide. Always secure children properly in your vehicle. To read how, see *Older Children on page 1-30* or *Infants and Young Children on page 1-33*.

There is an airbag readiness light on the instrument panel cluster, which shows the airbag symbol.

The system checks the airbag electrical system for malfunctions. The light tells you if there is an electrical problem. See *Airbag Readiness Light on page 3-33* for more information.

Downloaded from www.Manualslib.com manuals search engine

Where Are the Airbags?

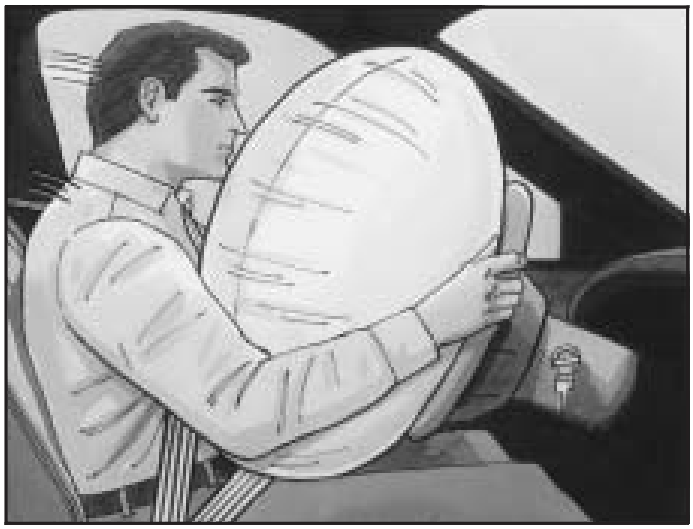

The driver's frontal airbag is in the middle of the steering wheel.

The right front passenger's frontal airbag is in the instrument panel on the passenger's side.

Downloaded from www.Manualslib.com manuals search engine

If your vehicle has a seat-mounted side impact airbag for the driver, it is in the side of the driver's seatback closest to the door.

If your vehicle has a seat-mounted side impact airbag for the right front passenger, it is in the side of the passenger's seatback closest to the door.

Downloaded from www.Manualslib.com manuals search engine

If your vehicle has a roof-mounted side impact airbag for the driver and the person seated directly behind the driver, it is in the ceiling above the side windows.

If your vehicle has a roof-mounted side impact airbag for the right front passenger and the person seated directly behind that passenger, it is in the ceiling above the side windows.

Downloaded from www.Manualslib.com manuals search engine

⚠ CAUTION:

If something is between an occupant and an airbag, the airbag might not inflate properly or it might force the object into that person causing severe injury or even death. The path of an inflating airbag must be kept clear. Do not put anything between an occupant and an airbag, and do not attach or put anything on the steering wheel hub or on or near any other airbag covering. If your vehicle has roof-mounted side impact airbags, never secure anything to the roof of your vehicle by routing the rope or tie-down through any door or window opening. If you do, the path of an inflating airbag will be blocked. Do not let seat covers block the inflation path of a side impact airbag. The path of an inflating airbag must be kept clear.

When Should an Airbag Inflate?

The driver's and right front passenger's frontal airbags are designed to inflate in moderate to severe frontal or near-frontal crashes. But they are designed to inflate only if the impact exceeds a predetermined deployment threshold. Deployment thresholds take into account a variety of desired deployment and non-deployment events and are used to predict how severe a crash is likely to be in time for the airbags to inflate and help restrain the occupants. Whether your frontal airbags will or should deploy is not based on how fast your vehicle is traveling. It depends largely on what you hit, the direction of the impact and how quickly your vehicle slows down.

In addition, your vehicle has "dual-stage" frontal airbags, which adjust the restraint according to crash severity. Your vehicle is equipped with electronic frontal sensors which help the sensing system distinguish between a moderate frontal impact and a more severe frontal impact. For moderate frontal impacts, these airbags inflate at a level less than full deployment. For more severe frontal impacts, full deployment occurs.

Downloaded from www.Manualslib.com manuals search engine

If the front of your vehicle goes straight into a wall that does not move or deform, the threshold level for the reduced deployment is about 12 to 16 mph (19 to 26 km/h), and the threshold level for a full deployment is about 18 to 24 mph (29 to 38.5 km/h). The threshold level can vary, however, with specific vehicle design, so that it can be somewhat above or below this range.

Frontal airbags may inflate at different crash speeds. For example:

- If the vehicle hits a stationary object, the airbags could inflate at a different crash speed than if the object were moving.
- If the vehicle hits an object that deforms, the airbags could inflate at a different crash speed than if the vehicle hits an object does not deform.
- If the vehicle hits a narrow object (like a pole) the airbags could inflate at a different crash speed than if the vehicle hits a wide object (like a wall).
- If the vehicle goes into an object at an angle the airbags could inflate at a different crash speed than if the vehicle goes straight into the object.

Frontal airbags (driver and right front passenger) are not intended to inflate during vehicle rollovers, rear impacts, or in many side impacts.

Your vehicle may or may not have side impact airbags. See *Airbag System on page 1-56*. Side impact airbags are intended to inflate in moderate to severe side crashes. A side impact airbag will inflate if the crash severity is above the system's designed threshold level. The threshold level can vary with specific vehicle design. Side impact airbags are not intended to inflate in frontal or near-frontal impacts, rollovers or rear impacts. A side impact airbag is intended to deploy on the side of the vehicle that is struck.

In any particular crash, no one can say whether an airbag should have inflated simply because of the damage to a vehicle or because of what the repair costs were. For frontal airbags, inflation is determined by what the vehicle hits, the angle of the impact, and how quickly the vehicle slows down. For side impact airbags, inflation is determined by the location and severity of the impact.

Downloaded from www.Manualslib.com manuals search engine

What Makes an Airbag Inflate?

In an impact of sufficient severity, the airbag sensing system detects that the vehicle is in a crash. The sensing system triggers a release of gas from the inflator, which inflates the airbag. The inflator, airbag and related hardware are all part of the airbag modules. Frontal airbag modules are located inside the steering wheel and the instrument panel. For vehicles with seat-mounted side impact airbags, there are also airbag modules in the side of the front seatbacks closest to the door. For vehicles with roof-mounted side impact airbags, there are also airbag modules in the ceiling of the vehicle, near the side window.

How Does an Airbag Restrain?

In moderate to severe frontal or near frontal collisions, even belted occupants can contact the steering wheel or the instrument panel. In moderate to severe side collisions, even belted occupants can contact the inside of the vehicle. The airbag supplements the protection provided by safety belts. Airbags distribute the force of the impact more evenly over the occupant's upper body, stopping the occupant more gradually. But the frontal airbags would not help you in many types of collisions, including rollovers, rear impacts, and many side impacts, primarily because an occupant's motion is not toward the airbag. Side impact airbags would not help you in many types of collisions, including many frontal or near frontal collisions, rollovers, and rear impacts, primarily because an occupant's motion is not toward those airbags. Airbags should never be regarded as anything more than a supplement to safety belts, and then only in moderate to severe frontal or near-frontal collisions for the driver's and right front passenger's frontal airbags, and only in moderate to severe side collisions for side impact airbags.

Downloaded from www.Manualslib.com manuals search engine

What Will You See After an Airbag Inflates?

After the airbag inflates, it quickly deflates, so quickly that some people may not even realize the airbag inflated. Some components of the airbag module — the steering wheel hub for the driver's airbag, the instrument panel for the right front passenger's bag, the side of the seatback closest to the door for the seat-mounted side impact airbags (if equipped) and the area along the ceiling of your vehicle near the side windows for the roof–mounted side impact airbags (if equipped) — will be hot for a short time. The parts of the bag that come into contact with you may be warm, but not too hot to touch. There will be some smoke and dust coming from the vents in the deflated airbags. Airbag inflation does not prevent the driver from seeing or being able to steer the vehicle, nor does it stop people from leaving the vehicle.

⚠ CAUTION:

When an airbag inflates, there is dust in the air. This dust could cause breathing problems for people with a history of asthma or other breathing trouble. To avoid this, everyone in the vehicle should get out as soon as it is safe to do so. If you have breathing problems but cannot get out of the vehicle after an airbag inflates, then get fresh air by opening a window or a door. If you experience breathing problems following an airbag deployment, you should seek medical attention.

Your vehicle may have a feature that will automatically unlock the doors, turn the interior lamps on, turn the hazard warning flashers on, and turn off the HVAC, when the airbags inflate (if battery power is available). You can lock the doors, turn the interior lamps off, turn the hazard warning flashers off and turn the HVAC on by using the controls for those features.

Downloaded from www.Manualslib.com manuals search engine

In many crashes severe enough to inflate the airbag, windshields are broken by vehicle deformation. Additional windshield breakage may also occur from the right front passenger airbag.

- Airbags are designed to inflate only once. After an airbag inflates, you will need some new parts for your airbag system. If you do not get them, the airbag system will not be there to help protect you in another crash. A new system will include airbag modules and possibly other parts. The service manual for your vehicle covers the need to replace other parts.
- Your vehicle is equipped with a crash sensing and diagnostic module which records information after a crash. See *Vehicle Data Collection and Event Data Recorders on page 7-9*
- Let only qualified technicians work on your airbag system. Improper service can mean that the airbag system will not work properly. See your dealer for service.

Passenger Sensing System

Your vehicle has a passenger sensing system. The passenger airbag status indicator on the instrument panel will be visible when you turn your ignition key to ON or START. The words ON and OFF or the symbol for on and off, will be visible during the system check. If you use remote start to start your vehicle from a distance, if equipped, you may not see the system check. When the system check is complete, either the word ON or the word OFF, or the symbol for on or the symbol for off will be visible. See *Passenger Airbag Status Indicator on page 3-34*.

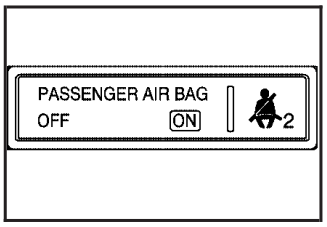

Passenger Airbag Status Indicator – United States

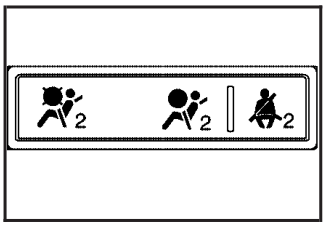

Passenger Airbag Status Indicator – Canada

The passenger sensing system will turn off the right front passenger's frontal airbag under certain conditions. The driver's airbag and the side airbags are not part of the passenger sensing system.

Downloaded from www.Manualslib.com manuals search engine

The passenger sensing system works with sensors that are part of the right front passenger's seat. The sensors are designed to detect the presence of a properly-seated occupant and determine if the passenger's frontal airbag should be enabled (may inflate) or not.

Accident statistics show that children are safer if they are restrained in the rear rather than the front seat. General Motors recommends that child restraints be secured in a rear seat, including an infant riding in a rear-facing infant seat, a child riding in a forward-facing child seat and an older child riding in a booster seat.

Your vehicle has a rear seat that will accommodate a rear-facing child restraint. A label on your sun visor says, "Never put a rear-facing child seat in the front." This is because the risk to the rear-facing child is so great, if the airbag deploys.

⚠ CAUTION:

A child in a rear-facing child restraint can be seriously injured or killed if the right front passenger's airbag inflates. This is because the back of the rear-facing child restraint would be very close to the inflating airbag.

Even though the passenger sensing system is designed to turn off the passenger's frontal airbag if the system detects a rear-facing child restraint, no system is fail-safe, and no one can guarantee that an airbag will not deploy under some unusual circumstance, even though it is turned off. We recommend that rear-facing child restraints be secured in the rear seat, even if the airbag is off.

Downloaded from www.Manualslib.com manuals search engine

The passenger sensing system is designed to turn off the right front passenger's frontal airbag if:

- the right front passenger seat is unoccupied
- the system determines that an infant is present in a rear-facing infant seat
- the system determines that a small child is present in a forward-facing child restraint
- the system determines that a small child is present in a booster seat
- a right front passenger takes his/her weight off of the seat for a period of time
- the right front passenger seat is occupied by a smaller person, such as a child who has outgrown child restraints
- or if there is a critical problem with the airbag system or the passenger sensing system.

When the passenger sensing system has turned off the right front passenger's frontal air bag, the off indicator on the instrument panel will light and stay lit to remind you that the airbag is off.

If a child restraint has been installed and the on indicator is lit, turn the vehicle off. Remove the child restraint from the vehicle and reinstall the child restraint following the child restraint manufacturer's directions and refer to *Securing a Child Restraint in the Right Front Seat Position on page 1-52*.

If after reinstalling the child restraint and restarting the vehicle, the on indicator is still lit, check to make sure that the vehicle's seatback is not pressing the child restraint into the seat cushion. If this happens, slightly recline the vehicle's seatback and adjust the seat cushion if possible. Also make sure the child restraint is not trapped under the vehicle head restraint. If this happens, adjust the head restraint.

If the on indicator is still lit, secure the child in the child restraint in a rear seat position in the vehicle and check with your dealer.

The passenger sensing system is designed to enable (may inflate) the right front passenger's frontal airbag anytime the system senses that a person of adult size is sitting properly in the right front passenger's seat. When the passenger sensing system has allowed the airbag to be enabled, the on indicator will light and stay lit to remind you that the airbag is active.

Downloaded from www.Manualslib.com manuals search engine

For some children who have outgrown child restraints and for very small adults, the passenger sensing system may or may not turn off the right front passenger's frontal airbag, depending upon the person's seating posture and body build. Everyone in your vehicle who has outgrown child restraints should wear a safety belt properly — whether or not there is an airbag for that person.

If a person of adult-size is sitting in the right front passenger's seat, but the off indicator is lit, it could be because that person is not sitting properly in the seat. If this happens, turn the vehicle off and ask the person to place the seatback in the fully upright position, then sit upright in the seat, centered on the seat cushion, with the person's legs comfortably extended. Restart the vehicle and have the person remain in this position for about two minutes. This will allow the system to detect that person and then enable the passenger's airbag.

Downloaded from www.Manualslib.com manuals search engine

⚠ CAUTION:

If the airbag readiness light in the instrument panel cluster ever comes on and stays on, it means that something may be wrong with the airbag system. If this ever happens, have the vehicle serviced promptly, because an adult-size person sitting in the right front passenger's seat may not have the protection of the frontal airbag. See *Airbag Readiness Light on page 3-33* for more on this, including important safety information.

A thick layer of additional material such as a blanket, or aftermarket equipment such as seat covers, seat heaters, and seat massagers, can affect how well the passenger sensing system operates. Remove any additional material from the seat cushion before reinstalling or securing the child restraint and before a small occupant, including a small adult, sits in the right front passenger's seat. You may want to consider not using seat covers or other aftermarket equipment if your vehicle has the passenger sensing system.

See *Adding Equipment to Your Airbag-Equipped Vehicle on page 1-70* for more information about modifications that can affect how the system operates.

The passenger sensing system may suppress the airbag deployment when liquid is soaked into the seat. If this happens, the off indicator in the passenger airbag status indicator and the airbag readiness light on the instrument panel will be lit. The system should resume normal operation after the seat is allowed to dry. If the system operates incorrectly after the seat has dried, have your dealer check the system.

⚠ CAUTION:

Stowing of articles under the passenger's seat or between the passenger's seat cushion and seatback may interfere with the proper operation of the passenger sensing system.

Downloaded from www.Manualslib.com manuals search engine

Servicing Your Airbag-Equipped Vehicle

Airbags affect how your vehicle should be serviced. There are parts of the airbag system in several places around your vehicle. Your dealer and the service manual have information about servicing your vehicle and the airbag system. To purchase a service manual, see *Service Publications Ordering Information on page 7-11*.

⚠ CAUTION:

For up to 20 seconds after the ignition key is turned off and the battery is disconnected, an airbag can still inflate during improper service. You can be injured if you are too close to an airbag when it inflates. Avoid wires wrapped with yellow tape, yellow coverings or yellow connectors. They are probably part of the airbag systems. Be sure to follow proper service procedures, and make sure the person performing work for you is qualified to do so.

The airbag system does not need regular maintenance.

Adding Equipment to Your Airbag-Equipped Vehicle

Q: Is there anything I might add to the front or sides of the vehicle that could keep the airbags from working properly?

A: Yes. If you add things that change your vehicle's frame, bumper system, front end or side sheet metal or height, they may keep the airbag system from working properly. Also, the airbag system may not work properly if you relocate any of the airbag sensors. If you have any questions about this, you should contact Customer Assistance before you modify your vehicle. The phone numbers and addresses for Customer Assistance are in Step Two of the Customer Satisfaction Procedure in this manual. See *Customer Satisfaction Procedure on page 7-2*

Downloaded from www.Manualslib.com manuals search engine

Q: Because I have a disability, I have to get my vehicle modified. How can I find out whether this will affect my airbag system?

A: Changing or moving any parts of the front seats, safety belts, the airbag sensing and diagnostic module (located under the center console), or the instrument panel can affect the operation of the airbag system. If you have questions, call Customer Assistance. The phone numbers and addresses for Customer Assistance are in Step Two of the Customer Satisfaction Procedure in this manual. See *Customer Satisfaction Procedure on page 7-2*.

Restraint System Check

Checking the Restraint Systems

Now and then, make sure the safety belt reminder light and all your belts, buckles, latch plates, retractors and anchorages are working properly. Look for any other loose or damaged safety belt system parts. If you see anything that might keep a safety belt system from doing its job, have it repaired.

Torn or frayed safety belts may not protect you in a crash. They can rip apart under impact forces. If a belt is torn or frayed, get a new one right away.

Also look for any opened or broken airbag covers, and have them repaired or replaced. (The airbag system does not need regular maintenance.)

Notice: **If you damage the covering for the driver's or the right front passenger's airbag, or the airbag covering on the driver's and right front passenger's seatback (if equipped), or the side impact airbag covering on the ceiling near the side windows (if equipped), the bag may not work properly. You may have to replace the airbag module in the steering wheel, both the airbag module and the instrument panel for the right front passenger's airbag, the airbag module and seatback for the driver's and right front passenger's seat-mounted side impact airbags (if equipped), or side impact airbag module and ceiling covering for the roof-mounted side impact airbags (if equipped). Do not open or break the airbag coverings.**

Downloaded from www.Manualslib.com manuals search engine

Replacing Restraint System Parts After a Crash

⚠ CAUTION:

A crash can damage the restraint systems in your vehicle. A damaged restraint system may not properly protect the person using it, resulting in serious injury or even death in a crash. To help make sure your restraint systems are working properly after a crash, have them inspected and any necessary replacements made as soon as possible.

If you have had a crash, do you need new belts or LATCH system parts?

After a very minor collision, nothing may be necessary. But if the belts were stretched, as they would be if worn during a more severe crash, then you need new parts.

If the LATCH system was being used during a more severe crash, you may need new LATCH system parts.

If belts are cut or damaged, replace them. Collision damage also may mean you will need to have LATCH system, safety belt or seat parts repaired or replaced. New parts and repairs may be necessary even if the belt or LATCH system was not being used at the time of the collision.

If an airbag inflates, you will need to replace airbag system parts. See the part on the airbag system earlier in this section.

If the frontal airbags inflate you will also need to replace the driver and front passenger's safety belt retractor assembly. Be sure to do so. Then the new retractor assembly will be there to help protect you in a collision.

After a crash you may need to replace the driver and front passenger's safety belt retractor assemblies, even if the frontal airbags have not deployed. The driver and front passenger's safety belt retractor assemblies contain the safety belt pretensioners. Have your safety belt pretensioners checked if your vehicle has been in a collision, or if your airbag readiness light stays on after you start your vehicle or while you are driving. See *Airbag Readiness Light on page 3-33*.

Downloaded from www.Manualslib.com manuals search engine

Section 2 Features and Controls

Keys 2-3
Remote Keyless Entry System 2-4
Remote Keyless Entry System Operation 2-5

Doors and Locks 2-10
Door Locks 2-10
Power Door Locks 2-11
Door Ajar Reminder 2-11
Delayed Locking 2-12
Automatic Door Lock 2-12
Programmable Automatic Door Unlock 2-13
Lockout Protection 2-13
Trunk 2-14

Windows 2-16
Power Windows 2-17
Sun Visors 2-19

Theft-Deterrent Systems 2-19
Content Theft-Deterrent 2-19
PASS-Key® III+ 2-20
PASS-Key® III+ Operation 2-21

Starting and Operating Your Vehicle 2-22
New Vehicle Break-In 2-22
Ignition Positions 2-23
Retained Accessory Power (RAP) 2-24
Starting the Engine 2-24
Adjustable Throttle and Brake Pedal (Automatic Transaxle) 2-26
Engine Coolant Heater 2-27
Automatic Transaxle Operation 2-28
Manual Transaxle Operation 2-32
Parking Brake 2-33
Shifting Into Park (P) (Automatic Transaxle) 2-34
Shifting Out of Park (P) (Automatic Transaxle) 2-36
Parking Your Vehicle (Manual Transaxle) 2-36
Parking Over Things That Burn 2-37
Engine Exhaust 2-37
Running the Engine While Parked 2-38

Downloaded from www.Manualslib.com manuals search engine

Section 2 Features and Controls

Mirrors 2-39
Manual Rearview Mirror 2-39
Manual Rearview Mirror with OnStar® 2-39
Automatic Dimming Rearview Mirror with OnStar® and Compass 2-39
Automatic Dimming Rearview Mirror with Compass 2-41
Outside Power Mirrors 2-43
Outside Convex Mirror 2-43
OnStar® System 2-44
Storage Areas 2-45
Glove Box 2-45
Cupholder(s) 2-45
Center Console Storage Area 2-45
Convenience Net 2-46
Sunroof 2-46
Sunroof - Panoramic 2-47
Retractable Hardtop 2-49
Lowering the Retractable Hardtop 2-49
Raising the Retractable Hardtop 2-51

Downloaded from www.Manualslib.com manuals search engine

Keys

⚠ CAUTION:

Leaving children in a vehicle with the ignition key is dangerous for many reasons. They could operate the power windows or other controls or even make the vehicle move. The children or others could be badly injured or even killed. Do not leave the keys in a vehicle with children.

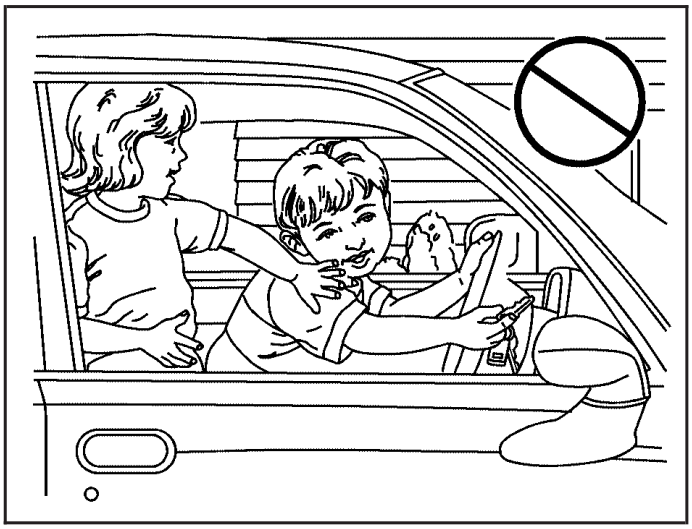

Downloaded from www.Manualslib.com manuals search engine

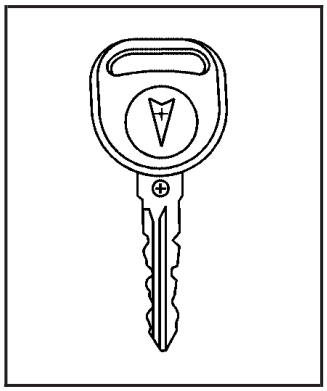

One key is used for the ignition and all locks.

When a new vehicle is delivered to the dealer, the key has a key tag. This tag has a bar-coded key code that tells your dealer how to make extra keys. This tag may be removed and kept by your dealer. If it hasn't been removed, keep the tag in a safe place. If you lose your key, your dealer can easily make another one by using the key code. See *Roadside Assistance Program on page 7-6* for more information.

Notice: **If you ever lock your keys in your vehicle, you may have to damage the vehicle to get in. Be sure you have spare keys.**

Remote Keyless Entry System

If equipped, the keyless entry system operates on a radio frequency subject to Federal Communications Commission (FCC) Rules and with Industry Canada.

This device complies with Part 15 of the FCC Rules. Operation is subject to the following two conditions:

1. This device may not cause interference.
2. This device must accept any interference received, including interference that may cause undesired operation of the device.

This device complies with RSS-210 of Industry Canada. Operation is subject to the following two conditions:

1. This device may not cause interference.
2. This device must accept any interference received, including interference that may cause undesired operation of the device.

Changes or modifications to this system by other than an authorized service facility could void authorization to use this equipment.

Downloaded from www.Manualslib.com manuals search engine

At times you may notice a decrease in range. This is normal for any remote keyless entry system. If the transmitter does not work or if you have to stand closer to your vehicle for the transmitter to work, try this:

- Check the distance. You may be too far from your vehicle. You may need to stand closer during rainy or snowy weather.
- Check the location. Other vehicles or objects may be blocking the signal. Take a few steps to the left or right, hold the transmitter higher, and try again.
- Check to determine if battery replacement is necessary. See “Battery Replacement” under *Remote Keyless Entry System Operation on page 2-5*.
- If you are still having trouble, see your dealer or a qualified technician for service.

Remote Keyless Entry System Operation

The vehicle’s doors may be locked and unlocked, and the trunk can be opened from approximately 3 feet (1 m) up to 60 feet (18 m) away with the remote keyless entry transmitter. If your vehicle has the remote vehicle start feature, you can also start the vehicle’s engine with the remote keyless entry transmitter.

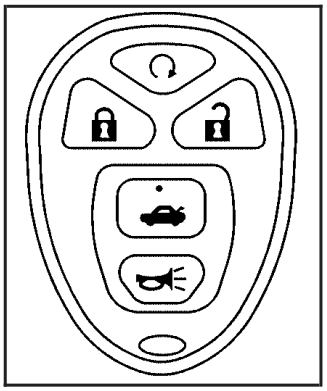

Remote Keyless Entry with Remote Start

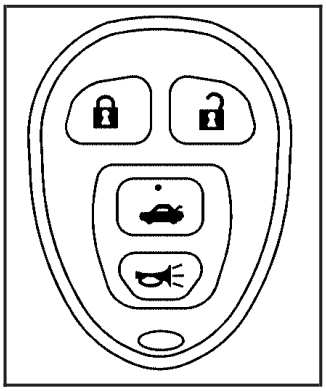

Remote Keyless Entry without Remote Start

Downloaded from www.Manualslib.com manuals search engine

The following functions may be available if your vehicle has the remote keyless entry system.

(Remote Vehicle Start): If your vehicle has this feature, the engine may be started from outside the vehicle using the remote keyless entry transmitter. See “Remote Vehicle Start” later in this section for more detailed information.

(Lock): Press the lock button to lock all the doors. The interior lamps will turn off after all of the doors are closed. If enabled through the Driver Information Center (DIC), the remote lock feedback can be programmed to have the horn chirp and/or the turn signals flash when the remote keyless entry transmitter is used to lock the vehicle’s doors. See “LOCK HORN” and “LIGHT FLASH” under *DIC Vehicle Personalization on page 3-52* for more information.

Pressing the lock button may also arm the content theft-deterrent system. See *Content Theft-Deterrent on page 2-19*.

(Unlock): Press the unlock button to unlock the driver’s door. If the button is pressed again within five seconds, all remaining doors will unlock. The interior lamps will turn on and stay on for 20 seconds or until the ignition is turned on. If enabled through the DIC, the remote unlock feedback can be programmed to have the horn chirp and/or the turn signals flash when the remote keyless entry transmitter is used to unlock the vehicle’s doors. See “UNLOCK HORN” and “LIGHT FLASH” under *DIC Vehicle Personalization on page 3-52* for more information.

If enabled through the DIC, and it is dark enough outside, the vehicle’s high-beam headlamps, parking lamps, and back-up lamps will turn on each time the unlock button on the transmitter is pressed. These exterior lamps will stay on for 20 seconds, or until a door is opened. See “EXT (Exterior) LIGHTS” under *DIC Vehicle Personalization on page 3-52* for additional information.

Pressing the unlock button on the remote keyless entry transmitter will disarm the content theft-deterrent system. See *Content Theft-Deterrent on page 2-19*.

(Remote Trunk Release): The trunk will open when this button on the transmitter is pressed and held for approximately one second. You can open the trunk with the transmitter when the vehicle speed is less than 2 mph (3 km/h) or when the ignition is off.

(Vehicle Locator/Panic Alarm): This button may be used to locate your vehicle. Press and release this button to initiate vehicle locate. The horn will sound three times and the headlamps and turn signals will flash three times. Press and hold the button for approximately three seconds to initiate the panic alarm. The horn will sound and the headlamps and turn signals will flash for 30 seconds. Press the button again to cancel the panic alarm.

Downloaded from www.Manualslib.com manuals search engine

Matching Transmitter(s) to Your Vehicle

Each remote keyless entry transmitter is coded to prevent another transmitter from unlocking your vehicle. If a transmitter is lost or stolen, a replacement can be purchased through your dealer. Remember to bring any remaining transmitters with you when you go to your dealer. Each vehicle can have a maximum of four transmitters matched to it.

Battery Replacement

Under normal use, the battery in your remote keyless entry transmitter should last about four years.

You can tell the battery is weak if the transmitter will not work at the normal range in any location. If you have to get close to your vehicle before the transmitter works, it is probably time to change the battery.

The KEY FOB BATT LOW message in the vehicle's DIC will display if the remote keyless entry transmitter battery is low.

Notice: **When replacing the battery, use care not to touch any of the circuitry. Static from your body transferred to these surfaces may damage the transmitter.**

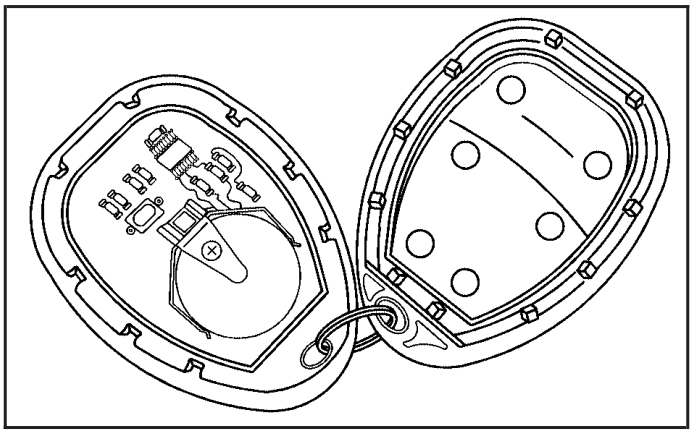

To replace the battery in the remote keyless entry transmitter do the following:

1. Insert a flat object, with a thin edge, into the notch located below the vehicle locator/panic alarm button, and separate the bottom half from the top half of the transmitter.
2. Remove the battery and replace it with the new one. Make sure the positive (+) side of the battery faces up. Use one three-volt, CR2032, or equivalent, type battery.
3. Put the two halves back together. Make sure the cover is on tight, so water will not get inside the transmitter.
4. Test the operation of the transmitter with the vehicle.

Downloaded from www.Manualslib.com manuals search engine

Remote Vehicle Start

Your vehicle may have a remote starting feature. This feature allows you to start the engine from outside the vehicle. It may also start the vehicle's heating or air conditioning systems and rear window defogger. When the remote start system is active and the vehicle has an automatic climate control system, it will automatically regulate the inside temperature. Normal operation of the system will return after the ignition key is turned to ON.

Laws in some communities may restrict the use of remote starters. For example, some laws may require a person using remote start to have the vehicle in view when doing so. Check local regulations for any requirements on remote starting of vehicles.

Do not use the remote start feature if your vehicle is low on fuel. Your vehicle may run out of fuel.

The remote start feature provides two separate starts per ignition cycle, each with 10 minutes of engine running.

The remote start feature needs to be reset after your vehicle's engine is started two times using the transmitter's remote start button. The remote start system is reset by inserting the vehicle's key into the ignition switch and turning to ON. See *Ignition Positions on page 2-23* for information regarding the ignition positions on your vehicle.

Your remote keyless entry transmitter, with the remote start button, provides an increased range of operation. You can start your vehicle's engine from approximately 197 feet (60 m) away. However, the range may be less while the vehicle is running, and as a result you may need to be closer to your vehicle to turn it off than you were to turn it on.

There are other conditions which can affect the performance of the transmitter, see *Remote Keyless Entry System on page 2-4* for additional information.

(Remote Start): If your vehicle has the remote start feature, the keyless entry transmitter will have a button with this symbol on it.

To start the vehicle using the remote start feature, do the following:

1. Aim the transmitter at the vehicle.
2. Press and release the transmitter's lock button, then immediately press and hold the transmitter's remote start button until the vehicle's turn signal lamps flash.
3. When the vehicle starts, the parking lamps will turn on and remain on while the engine is running.

   The engine will shut off automatically after 10 minutes, unless a time extension has been done or the vehicle's key is inserted into the ignition switch and turned to ON.

Downloaded from www.Manualslib.com manuals search engine

If you enter the vehicle after a remote start, and the engine is still running, insert the key into the ignition switch and turn to ON to drive the vehicle.

4. To manually shut off a remote start, do any of the following. The parking lamps will turn off to indicate the engine is off.
   - Aim the remote keyless entry transmitter at the vehicle and press and release the remote start button.
   - Turn on the hazard warning flashers.
   - Turn the ignition switch ON and then OFF.

Your vehicle's engine can be started two times, per ignition cycle, using the transmitter's remote start feature. If only one remote start procedure has been done, since last driving the vehicle, or resetting the remote start system, the engine may be started again remotely by following the remote start procedure a second time.

If the remote start procedure is used again before the first 10 minute time frame has ended, 10 minutes will be added to the remaining time. The added 10 minutes are considered a second remote start.

The remote vehicle start feature will not operate if any of the follow occur:

- The remote start system is disabled through the DIC.
- The vehicle's key is in the ignition.
- The vehicle's hood is open.
- The hazard warning flashers are on.
- The check engine light is on. See *Malfunction Indicator Lamp on page 3-40*.
- The engine coolant temperature is too high.
- The oil pressure is low.
- Two remote vehicle starts have already been provided for that ignition cycle.

Vehicles that have the remote vehicle start feature are shipped from the factory with the remote start system enabled. The system may be enabled or disabled through the DIC. See "REMOTE START" under *DIC Vehicle Personalization on page 3-52* for additional information.

Downloaded from www.Manualslib.com manuals search engine

Remote Start Ready (Automatic Transmission Only)

If your vehicle does not have the remote vehicle start feature, it may have the remote start ready feature. This feature allows your dealer to add the manufacturer's remote vehicle start feature.

If the keyless entry transmitter has a plus (+) symbol on the back cover, your vehicle has the remote start ready feature. You can lock or unlock your vehicle from approximately 197 feet (60 m) away.

See your dealer if you would like to add the manufacturer's remote vehicle start feature to your vehicle.

Doors and Locks

Door Locks

⚠ CAUTION:

Unlocked doors can be dangerous.

- **Passengers — especially children — can easily open the doors and fall out of a moving vehicle. When a door is locked, the handle will not open it. You increase the chance of being thrown out of the vehicle in a crash if the doors are not locked. So, wear safety belts properly and lock the doors whenever you drive.**
- **Young children who get into unlocked vehicles may be unable to get out. A child can be overcome by extreme heat and can suffer permanent injuries or even death from heat stroke. Always lock your vehicle whenever you leave it.**
- **Outsiders can easily enter through an unlocked door when you slow down or stop your vehicle. Locking your doors can help prevent this from happening.**

Downloaded from www.Manualslib.com manuals search engine

There are several ways to lock and unlock your vehicle.

From the outside, use your key or remote keyless entry transmitter, if equipped. Turn the key counterclockwise to unlock the door. Turn the key clockwise to lock the door.

From the inside, use the manual lock knobs or the power lock switches.

Power Door Locks

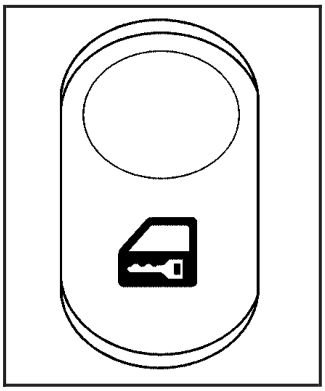

The power door lock switches are located on the driver's and front passenger's door.

Press the top of the switch to unlock all doors.
Press the bottom of the switch to lock all doors.

The rear doors do not have power door lock switches. Rear seat passengers must use the manual lock knob on their doors.

Door Ajar Reminder

If one of the doors is not fully closed while the ignition is on and the shift lever is moved out of PARK (P) or NEUTRAL (N) the following will occur:

- A chime will sound.
- The DOOR AJAR message will display through the Driver Information Center (DIC) until the door is closed. See *DIC Warnings and Messages on page 3-48*.

Downloaded from www.Manualslib.com manuals search engine

Delayed Locking

This feature allows the driver to delay the locking of the vehicle. It will not operate with the key in the ignition. See *Lockout Protection on page 2-13*.

Press the driver's power door lock switch or the remote keyless entry transmitter lock button once. With the key removed from the ignition and the driver's door open, the following will occur:

- Three chimes will sound to signal the delay.
- All doors will lock and the turn signals will flash once five seconds after the last door has been closed.
- The horn will chirp if the horn chirp feature is enabled. See *DIC Operation and Displays on page 3-46*.

If a door is opened before the five seconds has elapsed, the doors will not lock until five seconds after all doors are closed.

If the power door lock switch or the transmitter lock button is pressed twice when leaving the vehicle, the doors will lock immediately.

If the power door unlock switch or the transmitter unlock button is pressed, the doors will unlock immediately and not lock automatically after the doors are closed.

This feature is turned on at the factory but may be turned off through the Driver Information Center (DIC).

Automatic Door Lock

Your vehicle is programmed at the factory to lock all doors automatically when the following are met:

- All doors are closed.
- The ignition is on.
- The shift lever is moved out of PARK (P) for vehicles with an automatic transaxle.
- The vehicle speed is greater than 5 mph (8 km/h) for vehicles with a manual transaxle.

This feature cannot be disabled.

If someone needs to exit the vehicle once the doors are locked, have that person use the manual lock knob or power door unlock switch.

Downloaded from www.Manualslib.com manuals search engine

Programmable Automatic Door Unlock

If you have a vehicle with a manual transaxle, the doors will automatically unlock when the ignition is turned off. The automatic unlock feature cannot be programmed.

If you have a vehicle with an automatic transaxle, it was programmed at the factory to unlock when the shift lever is moved to PARK (P). You can change when the automatic unlocking occurs through the Driver Information Center (DIC). See *DIC Vehicle Personalization on page 3-52*.

Lockout Protection

This feature prevents the driver's door from being locked using the power door locks, if the key is left in the ignition and a door is open.

Pressing the power door lock switch will lock all the doors and then unlock the driver's door.

Pressing and holding the power door lock switch for more than three seconds will override this feature.

If you remove the key from the ignition, or if you use the manual door lock or the remote keyless entry transmitter, you could still lock your key inside your vehicle. Always remember to take your key with you.

Downloaded from www.Manualslib.com manuals search engine

Trunk

To open the trunk from the outside, use the key or press the trunk release button on the remote keyless entry transmitter.

When closing the trunk, close from the center of the lid to ensure it fully latches.

⚠ CAUTION:

It can be dangerous to drive with the trunk lid open because carbon monoxide (CO) gas can come into your vehicle. You cannot see or smell CO. It can cause unconsciousness and even death. If you must drive with the trunk lid open or if electrical wiring or other cable connections must pass through the seal between the body and the trunk lid:

- **Make sure all other windows are shut.**
- **Turn the fan on your heating or cooling system to its highest speed and select the control setting that will force outside air into your vehicle. See Climate Control System.**
- **If you have air outlets on or under the instrument panel, open them all the way.**

See *Engine Exhaust on page 2-37*.

Downloaded from www.Manualslib.com manuals search engine

Remote Trunk Release

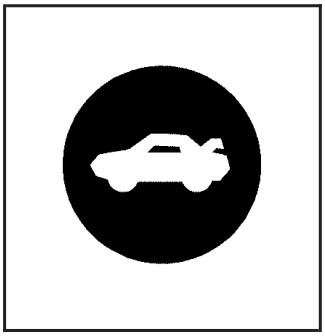

From the inside, press this button located on the driver's door near the map pocket to open the trunk.

You can open the trunk only while the vehicle is stationary.

Emergency Trunk Release Handle

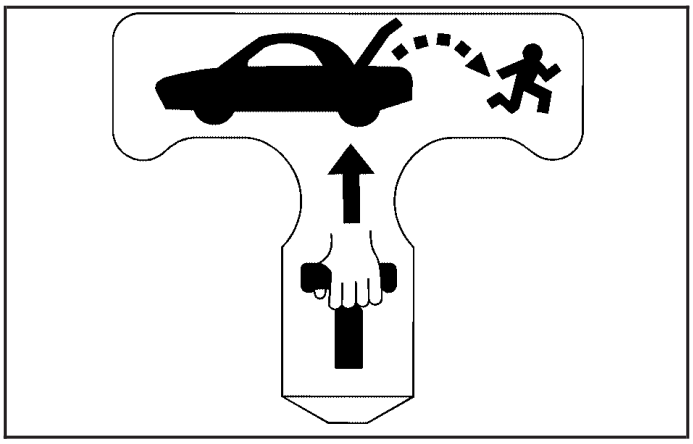

Notice: **Do not use the emergency trunk release handle as a tie-down or anchor point when securing items in the trunk as it could damage the handle. The emergency trunk release handle is only intended to aid a person trapped in a latched trunk, to open the trunk from the inside.**

There is a glow-in-the-dark emergency trunk release handle located inside the trunk on the trunk latch. This handle will glow following exposure to light. Pull the release handle up to open the trunk from the inside.

Downloaded from www.Manualslib.com manuals search engine

Windows

⚠ CAUTION:

Leaving children, helpless adults, or pets in a vehicle with the windows closed is dangerous. They can be overcome by the extreme heat and suffer permanent injuries or even death from heat stroke. Never leave a child, a helpless adult, or a pet alone in a vehicle, especially with the windows closed in warm or hot weather.

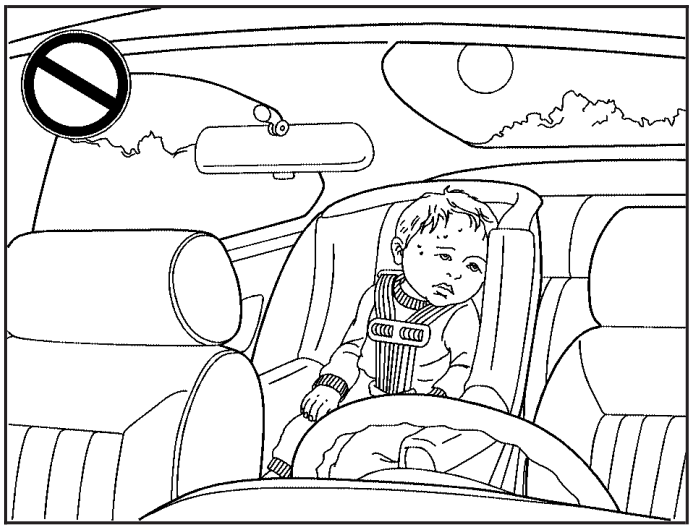

Downloaded from www.Manualslib.com manuals search engine

Power Windows

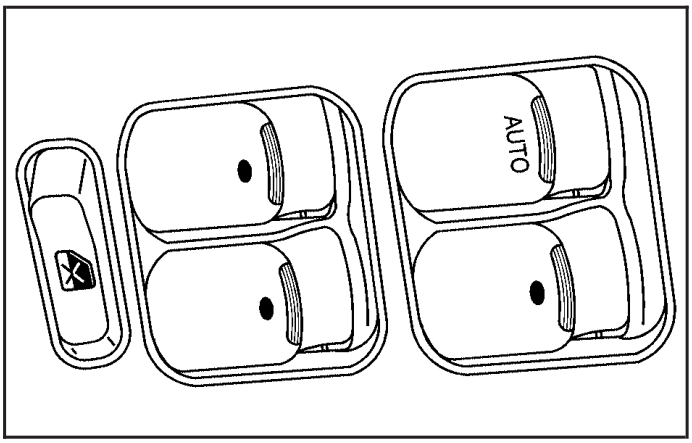

Sedan Switches shown; Retractable Hardtop similar

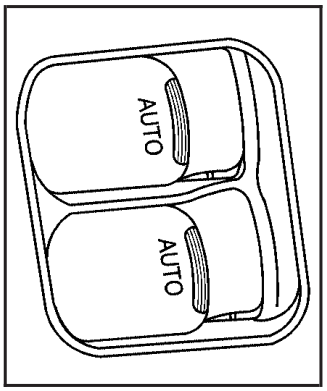

Coupe Switches

The power window switches for all the windows are located on the driver's door armrest. Each passenger door also has a power window switch for its own window. Press the front of the switch to the first position to lower the window to the desired level. Pull the switch up to raise the window.

Downloaded from www.Manualslib.com manuals search engine

Window Indexing (Coupe and Retractable Hardtop)

This feature automatically lowers the window a small amount when the door is opened. Then, when the door is closed, the window will automatically raise fully.

Power Window Initialize (Coupe and Retractable Hardtop)

After a power reconnect, such as battery replacement, the indexing feature will not function until the system is initialized. This procedure needs to be done for each individual window. Once power is restored, do the following:

1. Close the door.
2. Raise the window by pulling the power window switch up.
3. Hold the window switch up for two seconds after the window is closed. Release the switch. Then hold the switch up again for two seconds.
4. Lower the window all the way down. Hold the switch down for two seconds.
5. Repeat the procedure for each window, including the rear quarter windows on convertible models, until all windows are initialized.

Express-Down Window

The express-down feature lowers the window all the way without continuously pressing the switch. The switch(es) is labeled AUTO.

On sedan and retractable hardtop models, the driver's window has the express-down feature. On coupe models, both the driver's and front passenger's window have the express-down feature. The front passenger's express-down is activated by the driver's side switch only. Press the front of the switch all the way down and release it to express open the window.

To stop the window while it is lowering, pull the front of the switch up briefly.

Window Lockout (Sedan Only)

(Window Lockout): This button prevents the rear passengers from using their window switches.

The window lockout button is located near the driver's power window switches. The driver can still operate all the windows and the front passenger can operate their own window with the lockout on. Press the right side of the switch to turn the lockout feature on. Press the left side to turn it off. The red part of the switch is visible when you have returned to normal window operation.

Downloaded from www.Manualslib.com manuals search engine

Sun Visors

Swing down the visors to block glare. The visors can be removed from the center mount and swung to the side. The visors also have extenders that can be pulled out for additional blockage.

Your vehicle may have lighted vanity mirrors on the driver's and passenger's visors. When you lift the cover, the light will turn on.

Theft-Deterrent Systems

Vehicle theft is big business, especially in some cities. Although your vehicle has a number of theft-deterrent features, we know that nothing we put on it can make it impossible to steal.

Content Theft-Deterrent

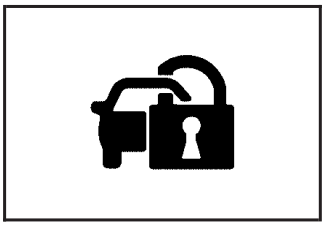

Your vehicle may have a content theft-deterrent alarm system.

Arming the System

With the ignition off, you can arm the system by pressing the remote keyless entry transmitter lock button or the power door lock switch while the driver's door is open.

The system will arm thirty seconds after all the doors are closed, or sixty seconds with any door open.

If you press the lock button on the transmitter a second time while all the doors are closed, the system will arm immediately. The system will still arm in sixty seconds if a door is open. When the open door is closed, it will also become armed.

The security light, located on the instrument panel cluster, will turn on to indicate that arming has been initiated. Once the system is armed, the security light will flash once every three seconds.

If the security light is flashing twice per second, this means that a door is open.

If you do not want to arm the system, you may lock the car with the lock levers on the doors.

Disarming the System

You can disarm the system by pressing the remote keyless entry transmitter unlock button, or turning the ignition on.

Once the system is disarmed, the security light will stop flashing.

Downloaded from www.Manualslib.com manuals search engine

How the System Alarm is Activated

If the system is armed, it can be activated by:

- Opening the driver's door or trunk. This will cause a ten second pre-alarm chirp followed by a thirty second full alarm of horn and lights.
- Opening any other door. This will immediately cause a full alarm of horn and lights for thirty seconds.
- Opening the hood. If the vehicle is equipped with the remote start feature, it will activate the full alarm.

When an alarm event has finished, the system will re-arm itself automatically.

How to Turn Off the System Alarm

To turn off the system alarm, do one of the following:

- Press the lock button on the remote keyless entry transmitter. The system will then re-arm itself.
- Press the unlock button on the remote keyless entry transmitter. This will also disarm the system.
- Insert the key in the ignition and turn it on. This will also disarm the system.

How to Detect a Tamper Condition

If you hear three chirps when you press the unlock or lock buttons on the remote keyless transmitter, it means that the content theft security system alarm was triggered previously.

PASS-Key® III+

Your PASS-Key® III+ system operates on a radio frequency subject to Federal Communications Commission (FCC) Rules and with Industry Canada.

This device complies with Part 15 of the FCC Rules. Operation is subject to the following two conditions:

1. This device may not cause harmful interference.
2. This device must accept any interference received, including interference that may cause undesired operation.

This device complies with RSS-210 of Industry Canada. Operation is subject to the following two conditions:

1. This device may not cause interference.
2. This device must accept any interference received, including interference that may cause undesired operation of the device.

Changes or modifications to this system by other than an authorized service facility could void authorization to use this equipment.

PASS-Key® III+ uses a radio frequency transponder in the key that matches a decoder in your vehicle.

Downloaded from www.Manualslib.com manuals search engine

PASS-Key® III+ Operation

Your vehicle is equipped with PASS-Key® III+ (Personalized Automotive Security System) theft-deterrent system. PASS-Key® III+ is a passive theft-deterrent system. This means you don't have to do anything special to arm or disarm the system. It works when you insert or remove the key from the ignition.

When the PASS-Key® III+ system senses that someone is using the wrong key, it prevents the vehicle from starting. Anyone using a trial-and-error method to start the vehicle will be discouraged because of the high number of electrical key codes.

When trying to start the vehicle if the engine does not start and the SECURITY light comes on, the key may have a damaged transponder. Turn the ignition off and try again.

If the engine still does not start, and the key appears to be undamaged, try another ignition key. At this time, you may also want to check the fuse, see *Fuses on page 5-97*. If the engine still does not start with the other key, your vehicle needs service. If your vehicle does start, the first key may be faulty. See your dealer who can service the PASS-Key® III+ to have a new key made. In an emergency, contact Roadside Assistance.

It is possible for the PASS-Key® III+ decoder to "learn" the transponder value of a new or replacement key. Up to 10 additional keys may be programmed for the vehicle. The following procedure is for programming additional keys only. If all the currently programmed keys are lost or do not operate, you must see your dealer or a locksmith who can service PASS-Key® III+ to have keys made and programmed to the system.

See your dealer or a locksmith who can service PASS-Key® III+ to get a new key blank that is cut exactly as the ignition key that operates the system.

To program the new key do the following:

1. Verify that the new key has "+" stamped on it.
2. Insert the already programmed key in the ignition and start the engine. If the engine will not start, see your dealer for service.
3. After the engine has started, turn the key to OFF, and remove the key.
4. Insert the key to be programmed and turn it to the ON position within five seconds of removing the original key.
5. The SECURITY light will turn off once the key has been programmed.
6. Repeat Steps 1 through 5 if additional keys are to be programmed.

Downloaded from www.Manualslib.com manuals search engine

If you are ever driving and the SECURITY light comes on and stays on, you may be able to restart your engine if you turn it off. Your PASS-Key® III+ system, however, is not working properly and must be serviced by your dealer. Your vehicle is not protected by the PASS-Key® III+ system at this time.

If you lose or damage your PASS-Key® III+ key, see your dealer or a locksmith who can service PASS-Key® III+ to have a new key made.

Starting and Operating Your Vehicle

New Vehicle Break-In

Notice: **Your vehicle does not need an elaborate break-in. But it will perform better in the long run if you follow these guidelines:**

- **Do not drive at any one speed, fast or slow, for the first 500 miles (805 km). Do not make full-throttle starts.**
- **Avoid making hard stops for the first 200 miles (322 km) or so. During this time your new brake linings are not yet broken in. Hard stops with new linings can mean premature wear and earlier replacement. Follow this breaking-in guideline every time you get new brake linings.**
- **Do not tow a trailer during break-in. See *Towing a Trailer on page 4-40* for more information.**

Downloaded from www.Manualslib.com manuals search engine

Ignition Positions

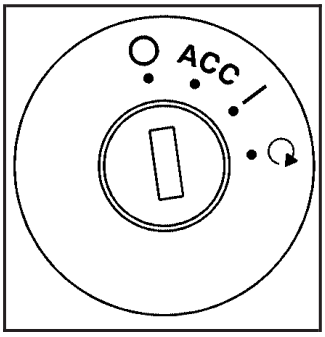

With the key in the ignition switch, you can turn it to four different positions.

Notice: **Using a tool to force the key from the ignition switch could cause damage or break the key. Use the correct key and turn the key only with your hand. Make sure the key is in all the way. If none of this works, then your vehicle needs service.**

◯ **(OFF):** This is the only position from which you can remove the key. For a vehicle with an automatic transaxle, the shift lever must be in PARK (P) with the ignition in OFF to remove the key. For a vehicle with a manual transaxle, the shift lever must be in REVERSE (R) to remove the key. A warning chime will sound if you open the driver's door while the ignition is off and the key is in the ignition.

ACC (ACCESSORY): This position unlocks the transaxle. It also lets you use things like the radio and windshield wipers while the engine is not running. To use ACC, turn the key clockwise to the first position. Use this position if your vehicle must be pushed or towed. See *Recreational Vehicle Towing on page 4-38*.

Never try to push-start your vehicle, unless it has a manual transaxle.

| **(ON):** This position is where the key returns to after you start the engine and release the key. The ignition switch will stay in this position while the engine is running. But even while the engine is not running, you can use ON to operate your electrical accessories and to display some instrument panel warning lights. Use the ON position for push-starting a vehicle with a manual transaxle.

(START): This position starts the engine. When the engine starts, release the key. The ignition switch will return to the ON position for normal driving.

Downloaded from www.Manualslib.com manuals search engine

Retained Accessory Power (RAP)

Your vehicle is equipped with a Retained Accessory Power (RAP) feature which will allow the radio, retractable hardtop, if equipped, and power windows to continue to work up to 10 minutes after the ignition is turned OFF, or when the driver's door is opened. If the front passenger door is opened the windows and sunroof function is discontinued.

Your radio and power windows will work when the ignition key is ON or ACC. Once the key is turned from ON to OFF, the radio will continue to work for up to 10 minutes or until the driver's door is opened. Also, while in the RAP mode power window and retractable hardtop, if equipped, operation is allowed for up to 10 minutes or until any door is opened.

Starting the Engine

Automatic Transaxle

Move your shift lever to PARK (P) or NEUTRAL (N). Your engine will not start in any other position — that is a safety feature. To restart when you are already moving, use NEUTRAL (N) only.

Notice: **Shifting into PARK (P) with the vehicle moving could damage the transaxle. Shift into PARK (P) only when your vehicle is stopped.**

Manual Transaxle

The shift lever should be in the neutral and the parking brake engaged. Hold the clutch pedal to the floor and start the engine. Your vehicle will not start if the clutch pedal is not all the way down. That is a safety feature.

Starting Your 2.4L L4 ECOTEC® Engine

1. With your foot off the accelerator pedal, turn your ignition key to START. When the engine starts, let go of the key. The idle speed will go down as your engine gets warm.

Notice: **Holding your key in START for longer than 15 seconds at a time will cause your battery to be drained much sooner. And the excessive heat can damage your starter motor. Wait about 15 seconds between each try to help avoid draining your battery or damaging your starter.**

2. If it does not start, wait about 15 seconds and try again to start the engine by turning the ignition key to START. Wait about 15 seconds between each try.

   When your engine has run about 10 seconds to warm up, your vehicle is ready to be driven. Do not "race" your engine when it is cold.

   If the weather is below freezing (32°F or 0°C), let the engine run for a few minutes to warm up.

Downloaded from www.Manualslib.com manuals search engine

3. If your engine still will not start, or starts but then stops, it could be flooded with too much gasoline. Try pushing your accelerator pedal all the way to the floor and holding it there as you hold the key in START for about three seconds. If the vehicle starts briefly but then stops again, do the same thing, but this time keep the pedal down for five or six seconds. This clears the extra gasoline from the engine.

Notice: **Your engine is designed to work with the electronics in your vehicle. If you add electrical parts or accessories, you could change the way the engine operates. Before adding electrical equipment, check with your dealer. If you do not, your engine might not perform properly. Any resulting damage would not be covered by your vehicle's warranty.**

Starting Your 3.5L V6 Engine

1. With your foot off the accelerator pedal, turn your ignition key to START. When the engine starts, let go of the key. The idle speed will go down as your engine warms up.

Notice: **Holding your key in START for longer than 15 seconds at a time will cause your battery to be drained much sooner. And the excessive heat can damage your starter motor. Wait about 15 seconds between each try to help avoid draining your battery or damaging your starter.**

2. If the engine does not start in 10 seconds, push the accelerator pedal about one-quarter of the way down while you turn the key to START. Do this until the engine starts. As soon as it does, let go of the key.
3. If your engine still will not start, or starts but then stops, it could be flooded with too much gasoline. Try pushing your accelerator pedal all the way to the floor and holding it there as you hold the key in START for a maximum of 15 seconds. This clears the extra gasoline from the engine. If the engine still will not start or starts briefly but then stops again, repeat Step 1 or 2, depending on temperature. When the engine starts, release the key and the accelerator pedal.

Notice: **Your engine is designed to work with the electronics in your vehicle. If you add electrical parts or accessories, you could change the way the engine operates. Before adding electrical equipment, check with your dealer. If you do not, your engine might not perform properly. Any resulting damage would not be covered by your vehicle's warranty.**

Downloaded from www.Manualslib.com manuals search engine

Starting Your 3.9L V6 Engine

1. With your foot off the accelerator pedal, turn your ignition key to START. When the engine starts, let go of the key. The idle speed will go down as your engine warms up.

Notice: **Holding your key in START for longer than 15 seconds at a time will cause your battery to be drained much sooner. And the excessive heat can damage your starter motor. Wait about 15 seconds between each try to help avoid draining your battery or damaging your starter.**

2. If the engine does not start in 10 seconds, push the accelerator pedal about one-quarter of the way down while you turn the key to START. Do this until the engine starts. As soon as it does, let go of the key.
3. If your engine still will not start, or starts but then stops, it could be flooded with too much gasoline. Try pushing your accelerator pedal all the way to the floor and holding it there as you hold the key in START for a maximum of 15 seconds. This clears the extra gasoline from the engine. If the engine still will not start or starts briefly but then stops again, repeat Step 1 or 2, depending on temperature. When the engine starts, release the key and the accelerator pedal.

Notice: **Your engine is designed to work with the electronics in your vehicle. If you add electrical parts or accessories, you could change the way the engine operates. Before adding electrical equipment, check with your dealer. If you do not, your engine might not perform properly. Any resulting damage would not be covered by your vehicle's warranty.**

Adjustable Throttle and Brake Pedal (Automatic Transaxle)

If your vehicle has this feature, you can change the position of the throttle and brake pedals. This feature is designed for shorter drivers, since the pedals cannot move farther away from the standard position, but can move rearward for better pedal reach.

The vehicle must be in PARK (P) or have the ignition off for this feature to operate. If the system senses unusually high resistance while the pedals are being adjusted, such as a driver's foot pushing the brake pedal, it is designed to disable the switch. Simply remove the obstruction and try to adjust the pedals again.

Downloaded from www.Manualslib.com manuals search engine

The switch used to adjust the pedals is located on the left side of the instrument panel.

To use your adjustable throttle and brake pedal feature, do the following:

The adjustable pedal feature is meant to be used with the adjustable seat and adjustable steering wheel controls to reach a safe and comfortable position.

1. Adjust your seat to a comfortable position where you can comfortably reach other controls such as the radio and climate controls.
2. Adjust the throttle and brake pedals to reach a comfortable and safe operating position.
3. Adjust the steering wheel to a safe operating position.

Engine Coolant Heater

Your vehicle may have this feature. In very cold weather, 0°F (–18°C) or colder, the engine coolant heater can provide easier starting and better fuel economy during engine warm-up. Usually, the coolant heater should be plugged in a minimum of four hours prior to starting your vehicle. At temperatures above 32°F (0°C), use of the coolant heater is not required. Your vehicle may also have an internal thermostat in the plug end of the cord. This will prevent operation of the engine coolant heater when the temperature is at or above 0°F (–18°C) as noted on the cord.

To Use the Engine Coolant Heater

1. Turn off the engine.
2. Open the hood and unwrap the electrical cord. On the 2.4L L4 ECOTEC® engine, the engine coolant heater cord is located near the air cleaner box on the passenger's side of the engine compartment. On the 3.5L and 3.9L V6 engines, the engine coolant heater cord is located on the driver's side around the battery box. See *Engine Compartment Overview on page 5-12* for more information on location.

Downloaded from www.Manualslib.com manuals search engine

3. Plug the cord into a normal, grounded 110-volt AC outlet.

⚠ CAUTION:

Plugging the cord into an ungrounded outlet could cause an electrical shock. Also, the wrong kind of extension cord could overheat and cause a fire. You could be seriously injured. Plug the cord into a properly grounded three-prong 110-volt AC outlet. If the cord will not reach, use a heavy-duty three-prong extension cord rated for at least 15 amps.

4. Before starting the engine, be sure to unplug and store the cord as it was before to keep it away from moving engine parts. If you do not, it could be damaged.

How long should you keep the coolant heater plugged in? The answer depends on the outside temperature, the kind of oil you have, and some other things. Instead of trying to list everything here, we ask that you contact your dealer in the area where you will be parking your vehicle. The dealer can give you the best advice for that particular area.

Automatic Transaxle Operation

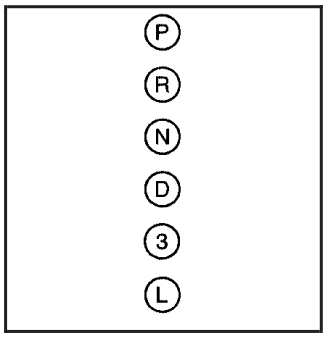

SE Model

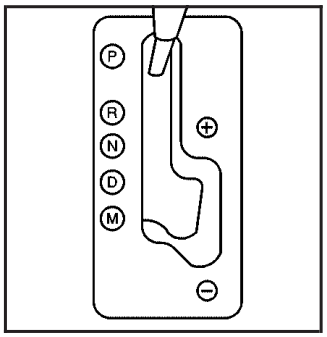

GT and GTP Models

Your automatic transaxle has a shift lever located on the console between the seats.

PARK (P): This position locks your front wheels. It is the best position to use when you start your engine because your vehicle cannot move easily.

Downloaded from www.Manualslib.com manuals search engine

⚠ CAUTION:

It is dangerous to get out of your vehicle if the shift lever is not fully in PARK (P) with the parking brake firmly set. Your vehicle can roll.

Do not leave your vehicle when the engine is running unless you have to. If you have left the engine running, the vehicle can move suddenly. You or others could be injured. To be sure your vehicle will not move, even when you are on fairly level ground, always set your parking brake and move the shift lever to PARK (P). See *Shifting Into Park (P) (Automatic Transaxle) on page 2-34*. If you are pulling a trailer, see *Towing a Trailer on page 4-40*.

Ensure the shift lever is fully in PARK (P) before starting the engine. Your vehicle has an automatic transaxle shift lock control system. You have to apply your regular brake and press the shift lever button before you can shift from PARK (P) while the ignition key is in ON. If you cannot shift out of PARK (P), ease pressure on the shift lever and push the shift lever all the way into PARK (P) as you maintain brake application. Then move the shift lever into another gear. See *Shifting Out of Park (P) (Automatic Transaxle) on page 2-36* later in this section.

REVERSE (R): Use this gear to back up.

Notice: **Shifting to REVERSE (R) while your vehicle is moving forward could damage the transaxle. The repairs would not be covered by your warranty. Shift to REVERSE (R) only after your vehicle is stopped.**

To rock your vehicle back and forth to get out of snow, ice or sand without damaging your transaxle, see *If Your Vehicle is Stuck in Sand, Mud, Ice or Snow on page 4-32*.

Downloaded from www.Manualslib.com manuals search engine

NEUTRAL (N): In this position, your engine does not connect with the wheels. To restart when you are already moving, use NEUTRAL (N) only. Also, use NEUTRAL (N) when your vehicle is being towed.

⚠ CAUTION:

Shifting into a drive gear while your engine is running at high speed is dangerous. Unless your foot is firmly on the brake pedal, your vehicle could move very rapidly. You could lose control and hit people or objects. Do not shift into a drive gear while your engine is running at high speed.

Notice: **Shifting out of PARK (P) or NEUTRAL (N) while the engine is running at high speed may damage the transaxle. The repairs would not be covered by your warranty. Be sure the engine is not running at high speeds when shifting your vehicle.**

AUTOMATIC OVERDRIVE (D): This position is for normal driving. If you need more power for passing, and you are:

- Going less than 35 mph (55 km/h), push your accelerator pedal about halfway down.
- Going about 35 mph (55 km/h) or more, push the accelerator all the way down.

You will shift down to the next gear and have more power.

Notice: **If your vehicle seems to start up rather slowly or not shift gears when you go faster, and you continue to drive your vehicle that way, you could damage the transaxle. Have your vehicle serviced right away. You can drive in LOW (L) when you are driving less than 35 mph (55 km/h) and AUTOMATIC OVERDRIVE (D) for higher speeds until then.**

THIRD (3): This position, available on the SE model, is also used for normal driving. However, it offers more power and lower fuel economy than AUTOMATIC OVERDRIVE (D). Here are some times you might choose THIRD (3) instead of AUTOMATIC OVERDRIVE (D):

- When driving on hilly, winding roads.
- When towing a trailer, so there is less shifting between gears.
- When going down a steep hill.

Downloaded from www.Manualslib.com manuals search engine

LOW (L): This position, available on the SE model, gives you more power but lower fuel economy than THIRD (3). You can use LOW (L) on hills. It can help control your speed as you go down steep mountain roads, but then you would also want to use your brakes off and on.

You can use LOW (L) on very steep hills, or in deep snow or mud. If the shift lever is put in LOW (L), the transaxle will not shift into first gear until the vehicle is going slowly enough.

Notice: **Driving in LOW (L) for more than 25 miles (40 km) or at speeds over 55 mph (90 km/h) may damage the transaxle. Also, shifting into LOW (L) at speeds above 65 mph (105 km/h) can cause damage. Drive in THIRD (3) or AUTOMATIC OVERDRIVE (D) instead of LOW (L).**

Notice: **Spinning the tires or holding the vehicle in one place on a hill using only the accelerator pedal may damage the transaxle. If you are stuck, do not spin the tires. When stopping on a hill, use the brakes, or parking brake to hold the vehicle in place.**

MANUAL MODE (M): This position, available on the GT/GTP models, allows you to change gears similar to a manual transaxle. If your vehicle has this feature, see Manual Shift Mode (MSM).

Manual Shift Mode (MSM) (Automatic Transaxle)

To use this feature, do the following:

1. Move the shift lever from AUTOMATIC OVERDRIVE (D) rearward and then to the right into the MANUAL MODE (M).
2. If you do not move the shift lever forward or rearward, the vehicle will be in the manual mode and a gear based on the current driving speed.

   While driving in manual mode, the transaxle may remain in a gear longer than it would in normal driving mode based on braking, throttle input and vehicle lateral acceleration.
3. Press the shift level forward to upshift or rearward to downshift.

The odometer on the instrument panel cluster will change from the vehicle's mileage to the letter M, for manual mode, and a number indicating the requested gear range when moving the shift lever forward or rearward. See *Speedometer and Odometer on page 3-31* for more information.

Downloaded from www.Manualslib.com manuals search engine

SECOND (2) Gear Start Feature

When accelerating your vehicle from a stop in snowy and icy conditions, you may want to shift into SECOND (2) gear. A higher gear allows you to gain more traction on slippery surfaces.

With the MSM feature, the vehicle can be set to pull away in SECOND (2) gear.

1. Move the shift lever from AUTOMATIC OVERDRIVE (D) into the MANUAL MODE (M).
2. With the vehicle stopped, move the lever forward to select SECOND (2) gear. The vehicle will start from a stop position in SECOND (2) gear.
3. Once moving select the desired drive gear.

While using the MSM feature the vehicle will have firmer shifting and increased performance. You can use this for sport driving or when climbing hills to stay in gear longer or to downshift for more power or engine braking.

The transaxle will only allow you to shift into gears appropriate for the vehicle speed and engine revolutions per minute (RPM). The transaxle will not automatically shift to the next higher gear if the engine RPM is too high.

When coming to a stop in the manual mode, the vehicle will automatically downshift to the proper gear based on speed. Upon acceleration you will need to manually upshift to the desired gear.

Manual Transaxle Operation

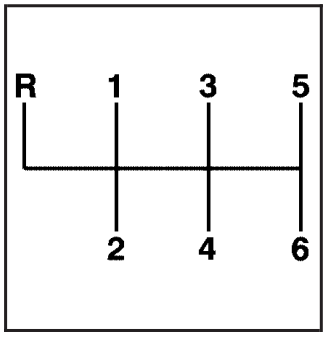

This is your shift pattern. The clutch must be fully pressed in when shifting a manual transaxle to ensure the transaxle is fully in gear.

Here is how to operate your transaxle:

FIRST (1): Press the clutch pedal and shift into FIRST (1). Then, slowly let up on the clutch pedal as you press the accelerator pedal.

You can shift into FIRST (1) when you are going less that 20 mph (32 km/h). If you have come to a complete stop and it is hard to shift into FIRST (1), put the shift lever into Neutral and let up on the clutch. Press the clutch pedal back down. Then shift into FIRST (1).

SECOND (2): Press the clutch pedal as you let up on the accelerator pedal and shift into SECOND (2). Then, slowly let up on the clutch pedal as you press the accelerator pedal.

Downloaded from www.Manualslib.com manuals search engine

THIRD (3), FOURTH (4), and FIFTH (5) and SIXTH (6): Shift into THIRD (3), FOURTH (4) and FIFTH (5) and SIXTH (6) the same way you do for SECOND (2). Slowly let up on the clutch pedal as you press the accelerator pedal.

To stop, let up on the accelerator pedal and press the brake pedal. Just before the vehicle stops, press the clutch pedal and the brake pedal, and shift to Neutral.

Neutral: Use this position when you start or idle your engine.

REVERSE (R): To back up, press down the clutch pedal and lift up on the ring on the shift lever to shift into REVERSE (R). Let up on the clutch pedal slowly while pressing the accelerator pedal.

Notice: **Shifting to REVERSE (R) while your vehicle is moving forward could damage the transaxle. The repairs would not be covered by your warranty. Shift to REVERSE (R) only after your vehicle is stopped.**

Also, use REVERSE (R), along with the parking brake, for parking your vehicle.

Once the shift lever is in REVERSE (R), the ignition can be turned to OFF and the key removed.

Parking Brake

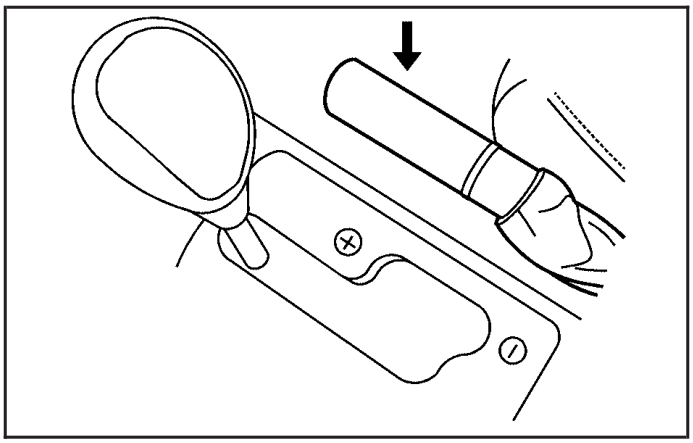

GT and GTP Shown, SE Similar

To set the parking brake, pull up on the parking brake handle. If the ignition is on, the brake system warning light will come on. See *Brake System Warning Light on page 3-36*.

Downloaded from www.Manualslib.com manuals search engine

To release the parking brake, hold the brake pedal down. Pull the parking brake handle up until you can press the release button. Hold the release button in as you move the brake handle all the way down.

Notice: **Driving with the parking brake on can overheat the brake system and cause premature wear or damage to brake system parts. Verify that the parking brake is fully released and the brake warning light is off before driving.**

If you are towing a trailer and you are parking on a hill, see *Towing a Trailer on page 4-40*.

Shifting Into Park (P) (Automatic Transaxle)

⚠ CAUTION:

It can be dangerous to get out of your vehicle if the shift lever is not fully in PARK (P) with the parking brake firmly set. Your vehicle can roll. If you have left the engine running, the vehicle can move suddenly. You or others could be injured. To be sure your vehicle will not move, even when you are on fairly level ground, use the steps that follow. If you are pulling a trailer, see *Towing a Trailer on page 4-40*.

Downloaded from www.Manualslib.com manuals search engine

Use the following procedure to shift into PARK (P):

1. Hold the brake pedal down with your right foot and set the parking brake.
2. Move the shift lever into PARK (P) by holding in the button on the shift lever and pushing the lever all the way toward the front of the vehicle.
3. Turn the ignition key to OFF.
4. Remove the key and take it with you. If you can leave your vehicle with the ignition key in your hand, your vehicle is in PARK (P).

Leaving Your Vehicle With the Engine Running (Automatic Transaxle)

⚠ CAUTION:

It can be dangerous to leave your vehicle with the engine running. Your vehicle could move suddenly if the shift lever is not fully in PARK (P) with the parking brake firmly set. And, if you leave the vehicle with the engine running, it could overheat and even catch fire. You or others could be injured. Do not leave your vehicle with the engine running.

If you have to leave your automatic transaxle vehicle with the engine running, be sure your vehicle is in PARK (P) and your parking brake is firmly set before you leave it. After you have moved the shift lever into PARK (P), hold the regular brake pedal down. Then, see if you can move the shift lever away from PARK (P) without first pushing the button.

If you can, it means that the shift lever was not fully locked into PARK (P).

Downloaded from www.Manualslib.com manuals search engine

Torque Lock (Automatic Transaxle)

If you are parking on a hill and you do not shift your automatic transaxle into PARK (P) properly, the weight of the vehicle may put too much force on the parking pawl in the transaxle. You may find it difficult to pull the shift lever out of PARK (P). This is called “torque lock.” To prevent torque lock, set the parking brake and then shift into PARK (P) properly before you leave the driver’s seat. To find out how, see “Shifting Into Park (P)” previously in the section.

When you are ready to drive, move the shift lever out of PARK (P) before you release the parking brake.

If torque lock does occur, you may need to have another vehicle push yours a little uphill to take some of the pressure from the parking pawl in the transaxle, so you can pull the shift lever out of PARK (P).

Shifting Out of Park (P) (Automatic Transaxle)

The automatic transaxle shift lock control system locks the shift lever in PARK when the ignition is in OFF. In addition, you have to fully apply your regular brakes before you can shift from PARK (P) when the ignition is in ON. See *Automatic Transaxle Operation on page 2-28*.

If you cannot shift out of PARK (P), ease pressure on the shift lever and push the shift lever all the way into PARK (P) as you maintain brake application. Then move the shift lever into the desired gear.

Parking Your Vehicle (Manual Transaxle)

Before leaving your vehicle, fully press the clutch pedal in, firmly apply the parking brake, and move the shift lever into REVERSE (R). Once the shift lever has been placed in REVERSE (R) with the clutch pedal pressed in, you can turn the ignition key to OFF, remove the key and release the clutch. See *Manual Transaxle Operation on page 2-32*.

Downloaded from www.Manualslib.com manuals search engine

Parking Over Things That Burn

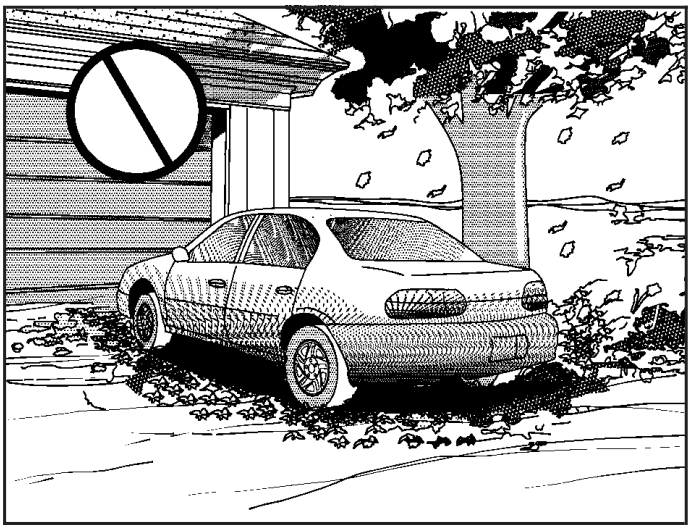

⚠ CAUTION:

Things that can burn could touch hot exhaust parts under your vehicle and ignite. Do not park over papers, leaves, dry grass or other things that can burn.

Engine Exhaust

⚠ CAUTION:

Engine exhaust can kill. It contains the gas carbon monoxide (CO), which you cannot see or smell. It can cause unconsciousness and death.

You might have exhaust coming in if:

- **Your exhaust system sounds strange or different.**
- **Your vehicle gets rusty underneath.**
- **Your vehicle was damaged in a collision.**
- **Your vehicle was damaged when driving over high points on the road or over road debris.**
- **Repairs were not done correctly.**
- **Your vehicle or exhaust system had been modified improperly.**

If you ever suspect exhaust is coming into your vehicle:

- **Drive it only with all the windows down to blow out any CO; and**
- **Have your vehicle fixed immediately.**

Downloaded from www.Manualslib.com manuals search engine

Running the Engine While Parked

It is better not to park with the engine running. But if you ever have to, here are some things to know.

⚠ CAUTION:

Idling the engine with the climate control system off could allow dangerous exhaust into your vehicle. See the earlier caution under *Engine Exhaust on page 2-37*.

Also, idling in a closed-in place can let deadly carbon monoxide (CO) into your vehicle even if the climate control fan is at the highest setting. One place this can happen is a garage. Exhaust — with CO — can come in easily. NEVER park in a garage with the engine running.

Another closed-in place can be a blizzard. See *Winter Driving on page 4-27*.

⚠ CAUTION:

It can be dangerous to get out of your vehicle if the automatic transaxle shift lever is not fully in PARK (P) with the parking brake firmly set. Your vehicle can roll. Do not leave your vehicle when the engine is running unless you have to. If you have left the engine running, the vehicle can move suddenly. You or others could be injured. To be sure your vehicle will not move, even when it is on fairly level ground, always set the parking brake and move the automatic transaxle shift lever to PARK (P), or the manual transaxle shift lever to NEUTRAL.

Follow the proper steps to be sure your vehicle will not move. If you have an automatic transaxle, see *Shifting Into Park (P) (Automatic Transaxle) on page 2-34*.

If you are parking on a hill and if you are pulling a trailer, see *Towing a Trailer on page 4-40*.

Downloaded from www.Manualslib.com manuals search engine

Mirrors

Manual Rearview Mirror

The mirror can be adjusted two ways. First, to adjust the height of the mirror, adjust the arm that connects the mirror to the windshield. Second, adjust the angle of the mirror, by moving the mirror to a position that allows you to see out of the back window.

To reduce glare from headlamps behind you, move the lever toward you to the night position. To return the mirror to the daytime position, move the lever away from you.

Manual Rearview Mirror with OnStar®

Your vehicle may have a rearview mirror with the OnStar® system.

Control buttons for the OnStar® system are at the bottom of the mirror. See your GM dealer for more information on the OnStar® system and how to subscribe to OnStar®. Also, see *OnStar® System on page 2-44* for more information about the services OnStar® provides.

Mirror Operation

While sitting in a comfortable driving position, adjust the rearview mirror so you can see clearly behind your vehicle. Grip it in the center to move it up or down and side to side. The day/night control, located at the bottom of the mirror, adjusts the mirror to reduce headlamp glare from behind during evening or dark conditions. Move the control to the right for night conditions. Return it to the center for daytime use.

Automatic Dimming Rearview Mirror with OnStar® and Compass

Your vehicle may have an automatic dimming rearview mirror with a compass and OnStar® controls. For more information about OnStar®, see *OnStar® System on page 2-44*.

The automatic dimming feature turns on each time the vehicle is started. To turn automatic dimming off or on, press the left button below the mirror. A green indicator light will be on when automatic dimming is on.

There are also three OnStar® buttons located at the bottom of the mirror. See your dealer for more information on the system and how to subscribe to OnStar®. See *OnStar® System on page 2-44* for more information about the service OnStar® provides.

Downloaded from www.Manualslib.com manuals search engine

Compass Operation

Press the on/off button once to turn the compass on or off.

When the ignition and the compass feature are on, the compass will show two character boxes for a few seconds. After a few seconds, the mirror will display the current compass direction.

Compass Calibration

If after a few seconds the display does not show a compass direction, (N for North for example), there may be a strong magnetic field interfering with the compass. Such interference may be caused by a magnetic antenna mount, note pad holder, or similar object. If the letter C appears in the compass window, the compass may need to be reset or calibrated.

The mirror can be calibrated by driving the vehicle in circles at 5 mph (8 km/h) or less until the display reads a direction.

Compass Variance

Compass variance is the difference between earth's magnetic north and true geographic north. If the mirror is not adjusted for compass variance, the compass could give false readings.

The mirror is set in zone eight upon leaving the factory. It will be necessary to adjust the compass to compensate for compass variance if the vehicle is driven outside zone eight. Under certain circumstances, such as a long distance, cross-country trip, it will be necessary to adjust the compass variance.

To adjust for compass variance, do the following:

1. Find your current location and variance zone number on the zone map that follows.

Downloaded from www.Manualslib.com manuals search engine

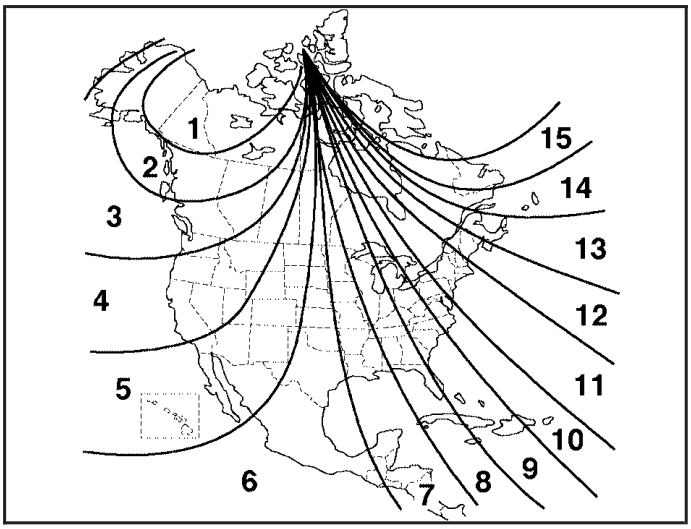

2. Press and hold the on/off button until a zone number appears on the display.
3. Once the zone number appears on the display, press the on/off button quickly until you reach the correct zone number. If C appears in the compass window, the compass may need calibration. See “Compass Calibration” listed previously.

Automatic Dimming Rearview Mirror with Compass

Your vehicle may have an automatic dimming rearview mirror with a compass. This feature enables the mirror to sense nighttime glare from vehicle headlamps from behind and automatically dim to reduce the glare to a safe level.

The automatic dimming feature turns on each time the vehicle is started. Press the OFF button once and the green indicator light located to the left of the button will go out indicating the feature is off. To turn the feature back on, press and release the AUTO button and the green indicator light will come on.

Compass Operation

Press the on/off button once to turn the compass on or off.

When the ignition and the compass feature are on, the compass will show two character boxes for a few seconds. After a few seconds, the mirror will display the current compass direction.

Downloaded from www.Manualslib.com manuals search engine

Compass Calibration

If after a few seconds the display does not show a compass direction, (N for North for example), there may be a strong magnetic field interfering with the compass. Such interference may be caused by a magnetic antenna mount, note pad holder, or similar object. If the letter C appears in the compass window, the compass may need to be reset or calibrated.

The mirror can be calibrated by driving the vehicle in circles at 5 mph (8 km/h) or less until the display reads a direction.

Compass Variance

Compass variance is the difference between earth's magnetic north and true geographic north. If the mirror is not adjusted for compass variance, the compass could give false readings.

The mirror is set in zone eight upon leaving the factory. It will be necessary to adjust the compass to compensate for compass variance if the vehicle is driven outside zone eight. Under certain circumstances, such as a long distance, cross-country trip, it will be necessary to adjust the compass variance.

To adjust for compass variance, do the following:

1. Find your current location and variance zone number on the zone map that follows.

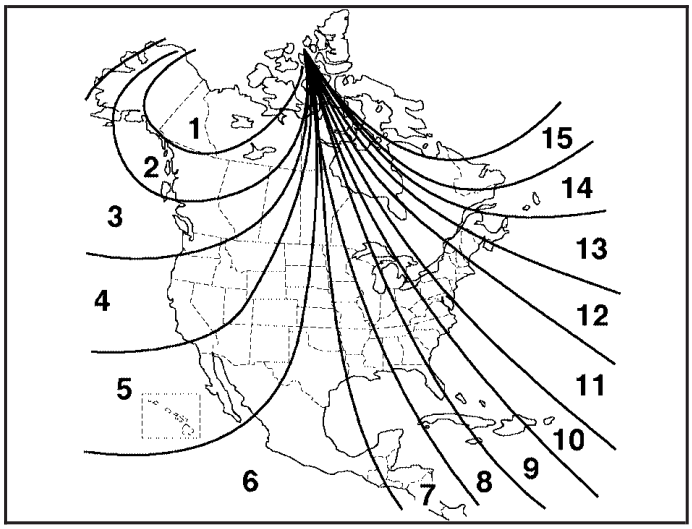

2. Press and hold the on/off button until a zone number appears on the display.
3. Once the zone number appears on the display, press the on/off button quickly until you reach the correct zone number. If C appears in the compass window, the compass may need calibration. See "Compass Calibration" listed previously.

Downloaded from www.Manualslib.com manuals search engine

Outside Power Mirrors

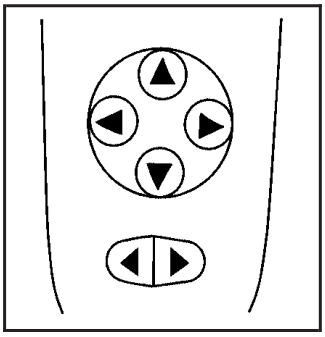

The controls for the outside power mirrors, are located on the driver's door.

Move the selector switch located next to the control pad to the left or right to choose either the driver's side or passenger's side mirror. To adjust a mirror, use the arrows located on the control pad to move the mirror in the desired direction. Adjust each outside mirror so that a little of the vehicle and the area behind it can be seen while sitting in a comfortable driving position. Keep the selector switch in the center position when not adjusting either outside mirror.

Both mirrors can manually be folded by pulling them toward the vehicle. This feature may be useful when going through a car wash or a confined space. Push the mirrors away from the vehicle, to the normal position, before driving.

Outside Convex Mirror

⚠ CAUTION:

A convex mirror can make things (like other vehicles) look farther away than they really are. If you cut too sharply into the right lane, you could hit a vehicle on your right. Check your inside mirror or glance over your shoulder before changing lanes.

The passenger's side mirror is convex. A convex mirror's surface is curved so more can be seen from the driver's seat. It also makes things, like other vehicles, look farther away than they really are.

Downloaded from www.Manualslib.com manuals search engine

OnStar® System

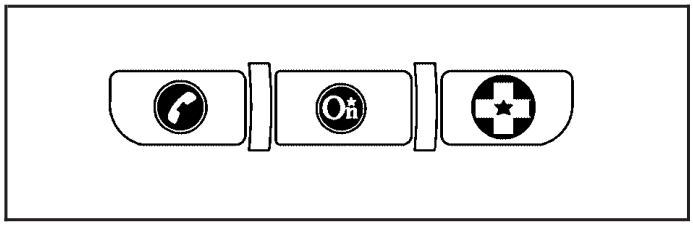

OnStar® uses global positioning system (GPS) satellite technology, wireless communications, and call centers to provide you with a wide range of safety, security, information, and convenience services.

A complete OnStar® user's guide and the terms and conditions of the OnStar® Subscription Service Agreement are included in the vehicle's glove box literature. For more information, visit www.onstar.com or www.onstarcanada.com. Contact OnStar® at 1-888-4-ONSTAR (1-888-466-7827), or press the OnStar® button to speak to an OnStar® advisor 24 hours a day, 7 days a week.

Terms and conditions of the Subscription Service Agreement can be found at www.onstar.com or www.onstarcanada.com.

OnStar® Services

For new vehicles equipped with OnStar®, the Safe and Sound Plan is included for the first year. You can extend this plan beyond the first year, or upgrade to the Directions and Connections Plan to meet your needs. For more information, press the OnStar® button to speak with an advisor.

Safe and Sound Plan

- Advanced Automatic Collision Notification
- Automatic Notification of Airbag Deployment
- Emergency Services
- Roadside Assistance
- Stolen Vehicle Tracking
- AccidentAssist
- Remote Door Unlock/Vehicle Alert
- Remote Diagnostics
- Online Concierge

Directions and Connections Plan

- All Safe and Sound Plan Services
- Driving Directions
- RideAssist
- Information and Convenience Services

Downloaded from www.Manualslib.com manuals search engine

OnStar® Personal Calling

As an OnStar® subscriber, the Personal Calling capability is an available hands-free wireless phone that is integrated into the vehicle. Calls can be placed nationwide using simple voice commands with no additional contracts and no additional roaming charges. To find out more about OnStar® Personal Calling, refer to the OnStar® user's guide in the vehicle's glove box or visit www.onstar.com or www.onstarcanada.com; or speak with an OnStar® advisor by pressing the OnStar® button or by calling 1-888-4-ONSTAR (1-888-466-7827).

OnStar® Virtual Advisor

Your vehicle may have Virtual Advisor. It is a feature of OnStar® Personal Calling that uses your minutes to access weather, local traffic reports, and stock quotes. By pressing the phone button and giving a few simple voice commands, you can browse through the various topics. Customize your information profile at www.myonstar.com. See the OnStar® user's guide for more information.

Storage Areas

Glove Box

To open the glove box, lift up on the lever.

Cupholder(s)

There are two cupholders in the front center console of the vehicle and two in the rear of the center console. Pull down the door on the rear of the center console to use the rear seat cupholders.

Center Console Storage Area

The center console has a separate storage area. To open the compartment, which is also the armrest, pull up the latch release handle on the front of the lid.

In the floor console is a power accessory outlet. See *Accessory Power Outlet(s) on page 3-19* for more information.

Downloaded from www.Manualslib.com manuals search engine

Convenience Net

The vehicle may have a convenience net located on the back wall or the sides of the trunk.

Put small loads, like grocery bags, behind the net. It can help keep them from falling over.

The net is not for larger, heavier loads. Store those in the trunk as far forward as possible.

Unhook the net so that it will lie flat when not in use.

Sunroof

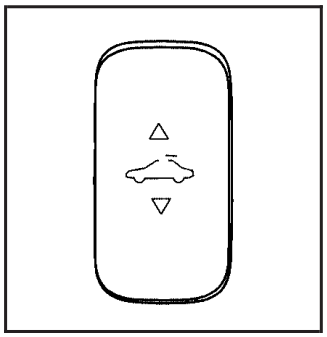

If your vehicle has a sunroof, the switch is located on the headliner between the map lamps.

The sunroof will only operate while the ignition is in ON or in ACC, or if Retained Accessory Power (RAP) is active. See *Retained Accessory Power (RAP) on page 2-24*.

Press the back of the switch and release it to open the sunroof to the vent position. From the vent position, press and release the back of the switch to express-open the sunroof. To stop the sunroof from express opening, press the switch again. If the sunshade is closed, it will open automatically when the sunroof opens past the vented position.

Downloaded from www.Manualslib.com manuals search engine

To close the sunroof, press the front of the switch and hold it until the sunroof is closed. The sunroof will stop if the switch is released. Close the sunshade by hand.

The sunroof glass panel cannot be opened or closed if the vehicle has an electrical failure.

Notice: **If you force the sunshade forward of the sliding glass panel, damage will occur and the sunroof may not open or close properly. Always close the glass panel before closing the sunshade.**

Sunroof - Panoramic

If the vehicle has a panoramic sunroof, it has four glass panels that tilt or stack upon each other, when the sunroof control is turned to the vent or one of three opened positions. There is a separate control for the automatic sunshade.

The sunroof will only operate while the ignition is ON or in ACC, or if Retained Accessory Power (RAP) is active. See *Retained Accessory Power (RAP) on page 2-24*.

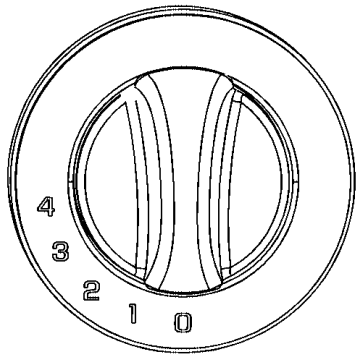

The panoramic sunroof control is located on the headliner. From the closed position, turn the control clockwise to vent the sunroof or open it to three different positions.

0 (Closed Position): Turn the control to this position to close the panoramic sunroof.

1 (Vent Position): Turn the control to this position to vent the panoramic sunroof. The front glass panel of the sunroof will tilt forward and the sunshade will automatically retract to the vent position.

Downloaded from www.Manualslib.com manuals search engine

2 (First-Open Position): Turn the control to this position to open the panoramic sunroof about a third of the way. The second glass panel will retract and the fourth glass panel will stack above the roof. The sunshade will automatically retract to this position.

3 (Second-Open Position): Turn the control to this position to open the panoramic sunroof about half-way. The second glass panel will retract and the third panel will stack in front of the fourth glass panel. The sunshade will automatically retract to this position.

4 (Full-Open Position): Turn the control to this position to completely open the panoramic sunroof. The second glass panel retracts and stacks in front of the third and fourth panels. The sunshade will automatically retract to the full-open position. To lessen wind noise in this position, use the automatic sunshade control and close the sunshade to the comfort stop position. See “Sunshade” following.

Anti-Pinch Feature

If an object is in the path of the sunroof when it is closing, the anti-pinch feature will detect the object and stop the sunroof from closing at the point of obstruction. The sunroof will then reverse direction.

Sunshade

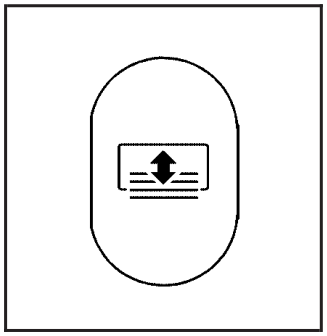

The automatic sunshade control is located on the headliner, between the map lamp controls.

The sunshade can be independently opened or closed while the panoramic sunroof is closed. To express-open or express-close the sunshade, press and release the control rearward or forward. The sunshade will retract to the full-open or closed position. To stop the movement of the sunshade, press the control a second time. To close the sunshade to a particular position, continue to press the control and release it when the desired position is reached.

Neither the panoramic sunroof or the sunshade can be opened or closed if the vehicle has an electrical failure.

Downloaded from www.Manualslib.com manuals search engine

Retractable Hardtop

The following procedures explain the proper operation of the retractable hardtop. The retractable hardtop will not operate if the trunk cargo cover is not in place.

If the retractable hardtop is lowered or raised multiple times, the engine should be running while doing so to prevent drain on the vehicle's battery.

⚠ CAUTION:

Moving parts of the retractable hardtop can be dangerous. People can be injured by the hardtop and its mechanism. Keep people away from your vehicle when you are lowering or raising the top.

Lowering the Retractable Hardtop

Notice: **Leaving the retractable hardtop down and exposing the interior of your vehicle to outdoor conditions may cause damage. Always close the retractable hardtop if leaving your vehicle outdoors.**

Notice: **Raising or lowering the top while the vehicle is in motion can cause damage to the top or top mechanism. Make sure the vehicle is in PARK (P) to lower or raise the top.**

Notice: **Lowering the top if it is damp, wet, or dirty can cause stains, mildew, and damage to the inside of your vehicle. Dry off the top before lowering it.**

Downloaded from www.Manualslib.com manuals search engine

Notice: **If you lower the retractable hardtop in cold weather (0°F/–18°C or lower), you may damage top components. Do not lower the retractable hardtop in cold weather.**

1. Park on a level surface and shift the automatic transaxle into PARK (P), or a manual transaxle into NEUTRAL with the parking brake set.
2. The vehicle's engine must be on or turned to ACC, the trunk cargo cover must be in place, and the trunk must be closed.
3. Lower both sun visors.
4. Make sure that nothing or no one is on or around the top. Make sure there is nothing on top or in front of the cargo cover.

⚠ CAUTION:

Moving parts of the retractable hardtop can be dangerous. People can be injured by the hardtop and its mechanism. Keep people away from your vehicle when you are lowering or raising the top.

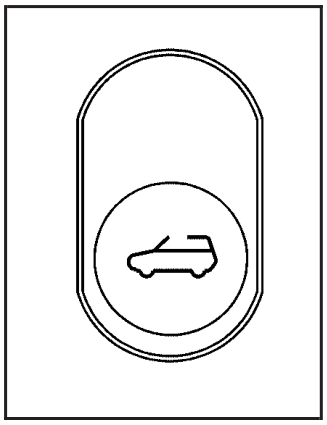

5. Push and hold the bottom of the retractable hardtop button located on the headliner, between the front reading lamps. The windows will automatically lower and the top will automatically lower into the storage area. A chime will sound when the top has lowered completely.

If the radio is on, the sound may be muted briefly while the retracable top is lowered. This is due to the audio equalization system re-loading.

Under certain conditions, the Driver Information Center (DIC) may display a message regarding the retractable hardtop. If this happens, see *DIC Warnings and Messages on page 3-48* for more information.

Downloaded from www.Manualslib.com manuals search engine

Raising the Retractable Hardtop

1. Park on a level surface and shift the automatic transaxle into PARK (P), or a manual transaxle into NEUTRAL with the parking brake set.
2. The vehicle's engine must be on or in ACC, and the trunk cargo cover must be in place.
3. Lower both sun visors.

Notice: **Raising or lowering the top while the vehicle is in motion can cause damage to the top or top mechanism. Make sure the vehicle is in PARK (P) to lower or raise the top.**

4. Make sure nothing or no one is on or around the top. Make sure there is no cargo on top of or in front of the trunk cargo cover.

⚠ CAUTION:

Moving parts of the retractable hardtop can be dangerous. People can be injured by the hardtop and its mechanism. Keep people away from your vehicle when you are lowering or raising the top.

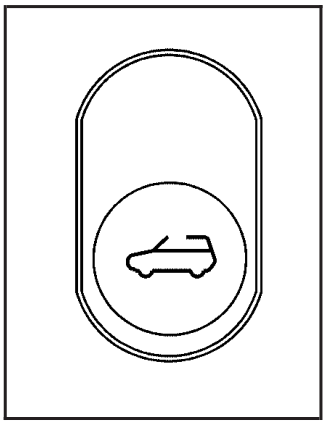

5. Push and hold the top of the retractable hardtop button located on the headliner between the front reading lamps. The windows will automatically lower and the top will raise. A chime will sound when the top has raised completely.

After the top is fully raised, release the retractable hardtop button. If you press the button again within five seconds, the windows will automatically close.

If your radio is on, you may notice a brief mute in sound. This is normal and due to the audio system equalization re-loading for the vehicle with the top raised.

Under certain conditions, the Driver Information Center (DIC) may display a message regarding the retractable hardtop. If this happens, see *DIC Warnings and Messages on page 3-48* for more information.

Downloaded from www.Manualslib.com manuals search engine

✍ NOTES

Downloaded from www.Manualslib.com manuals search engine

Section 3 Instrument Panel

Instrument Panel Overview 3-4
Hazard Warning Flashers 3-6
Other Warning Devices 3-6
Horn 3-6
Tilt Wheel 3-6
Turn Signal/Multifunction Lever 3-7
Turn and Lane-Change Signals 3-8
Headlamp High/Low-Beam Changer 3-8
Flash-to-Pass 3-8
Windshield Wipers 3-9
Windshield Washer 3-10
Cruise Control 3-10
Headlamps 3-14
Headlamps on Reminder 3-14
Headlamps Off in PARK (P) 3-14
Delayed Headlamps 3-15
Daytime Running Lamps (DRL) 3-15
Automatic Headlamp System 3-16
Fog Lamps 3-17
Instrument Panel Brightness 3-17
Courtesy Lamps 3-17
Dome Lamp 3-18
Entry/Exit Lighting 3-18
Overhead Console Reading Lamps 3-18
Trunk Lamp 3-18
Battery Run-Down Protection 3-18
Accessory Power Outlet(s) 3-19

Climate Controls 3-20
Climate Control System 3-20
Automatic Climate Control System 3-23
Outlet Adjustment 3-28

Warning Lights, Gages, and Indicators 3-29
Instrument Panel Cluster 3-29
Speedometer and Odometer 3-31
Trip Odometer 3-31
Tachometer 3-31
Safety Belt Reminder Light 3-32
Passenger Safety Belt Reminder Light 3-32
Airbag Readiness Light 3-33
Passenger Airbag Status Indicator 3-34
Charging System Light 3-36
Brake System Warning Light 3-36
Anti-Lock Brake System Warning Light 3-37
Traction Control System (TCS) Warning Light 3-38
Traction Control System Active Light 3-38
Enhanced Traction System Warning Light 3-38
Enhanced Traction System Active Light 3-39
StabiliTrak® Not Ready Light 3-39
StabiliTrak® Indicator Light 3-39
Engine Coolant Temperature Gage 3-40
Malfunction Indicator Lamp 3-40
Oil Pressure Light 3-43

Downloaded from www.Manualslib.com manuals search engine

Section 3 Instrument Panel

Security Light 3-44
Cruise Control Light 3-44
Highbeam On Light 3-44
Service Vehicle Soon Light 3-44
Fuel Gage 3-45
Low Fuel Warning Light 3-45

Driver Information Center (DIC) 3-45
DIC Operation and Displays 3-46
DIC Warnings and Messages 3-48
DIC Vehicle Personalization 3-52

Audio System(s) 3-54
Setting the Time for Radios without Radio Data Systems (RDS) 3-55
Setting the Time for Radios with Radio Data Systems (RDS) 3-55
Radio with CD (Base Level) 3-56
Radio with CD (Up Level) 3-61
Radio with Six-Disc CD 3-71
Theft-Deterrent Feature 3-86
Audio Steering Wheel Controls (Three Spoke) 3-86
Audio Steering Wheel Controls (Four Spoke) 3-87
Radio Reception 3-87
Care of Your CDs and DVDs 3-88
Care of the CD and DVD Player 3-88
Fixed Mast Antenna (Retractable Hardtop) 3-88
Backglass Antenna 3-89
XM™ Satellite Radio Antenna System 3-89

Downloaded from www.Manualslib.com manuals search engine

✍ NOTES

Downloaded from www.Manualslib.com manuals search engine

Instrument Panel Overview

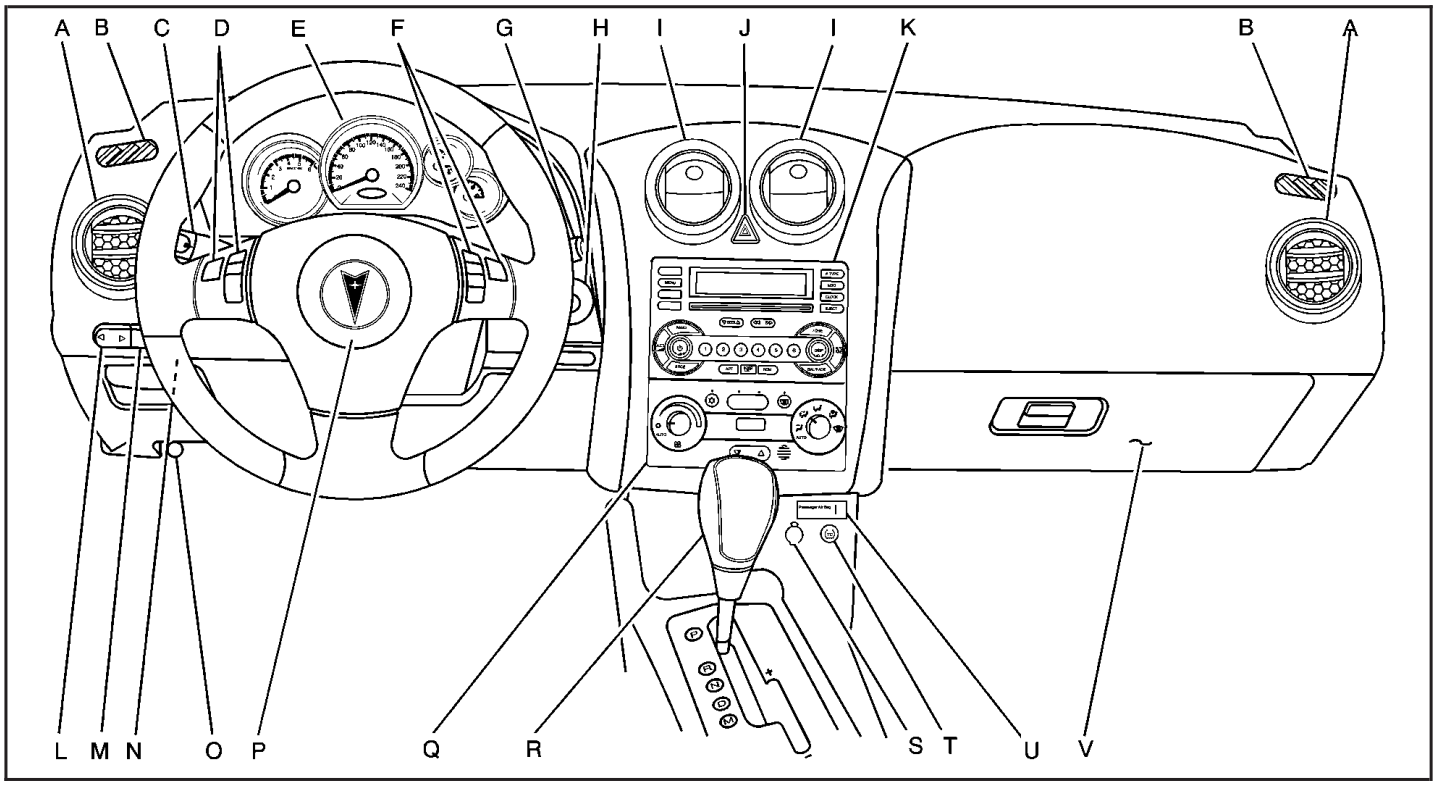

Downloaded from www.Manualslib.com manuals search engine

The main components of your instrument panel are the following:

A. Side Air Outlets. See *Outlet Adjustment on page 3-28*.
B. Side Window Outlets. See *Outlet Adjustment on page 3-28*.
C. Turn Signal/Multifunction Lever. See *Turn Signal/Multifunction Lever on page 3-7*.
D. Cruise Controls (If Equipped). See *Cruise Control on page 3-10*.
E. Instrument Panel Cluster. See *Instrument Panel Cluster on page 3-29*.
F. Audio Steering Wheel Controls (If Equipped). See *Audio Steering Wheel Controls (Three Spoke) on page 3-86* or *Audio Steering Wheel Controls (Four Spoke) on page 3-87*.
G. Windshield Wiper and Washer Lever. See *Windshield Wipers on page 3-9* and *Windshield Washer on page 3-10*.
H. Ignition Switch. See *Ignition Positions on page 2-23*.
I. Center Air Outlets. See *Outlet Adjustment on page 3-28*.
J. Hazard Warning Flashers Button. See *Hazard Warning Flashers on page 3-6*.
K. Audio System. See *Audio System(s) on page 3-54*.
L. Adjustable Pedal Buttons (If Equipped). See *Adjustable Throttle and Brake Pedal (Automatic Transaxle) on page 2-26*.
M. Instrument Panel Brightness Control. See *Instrument Panel Brightness on page 3-17*.
N. Fog Lamps (If Equipped). See *Fog Lamps on page 3-17*.
O. Hood Release Handle. See *Hood Release on page 5-11*.
P. Horn. See *Horn on page 3-6*.
Q. Climate Control System. See *Automatic Climate Control System on page 3-23* or *Climate Control System on page 3-20*.
R. Shift Lever. See *Automatic Transaxle Operation on page 2-28* or *Manual Transaxle Operation on page 2-32.*
S. Accessory Power Outlet. See *Accessory Power Outlet(s) on page 3-19*.
T. Traction Control System Button (If Equipped), Enhanced Traction System Button (If Equipped), and/or StabiliTrak® (If Equipped). See *Traction Control System (TCS) on page 4-9* or *Enhanced Traction System (ETS) on page 4-11* and/or *StabiliTrak® System on page 4-12*.
U. Passenger Airbag Status Indicator. See *Passenger Airbag Status Indicator on page 3-34*.
V. Glove Box. See *Glove Box on page 2-45*.

Downloaded from www.Manualslib.com manuals search engine

Hazard Warning Flashers

Your hazard warning flashers let you warn others. They also let police know you have a problem. Your front and rear turn signal lamps will flash on and off.

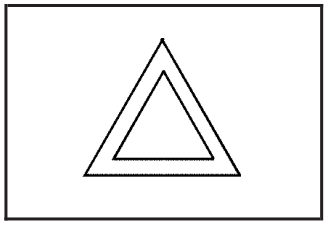

The hazard warning flasher button is located in the center of the instrument panel.

Your hazard warning flashers work no matter what position your key is in, and even if the key is not in.

Press the button to make the front and rear turn signal lamps flash on and off. Press the button again to turn the flashers off.

When the hazard warning flashers are on, your turn signals will not work.

Other Warning Devices

If you carry reflective triangles, you can set them up at the side of the road about 300 feet (100 m) behind your vehicle.

Horn

Press near or on the horn symbols on your steering wheel pad to sound the horn.

Tilt Wheel

A tilt and telescope wheel allows you to adjust the steering wheel before you drive. You can raise the steering wheel to the highest level to give your legs more room when you enter and exit the vehicle.

Downloaded from www.Manualslib.com manuals search engine

The lever that allows you to tilt and telescope the steering wheel is located on the left side of the steering column.

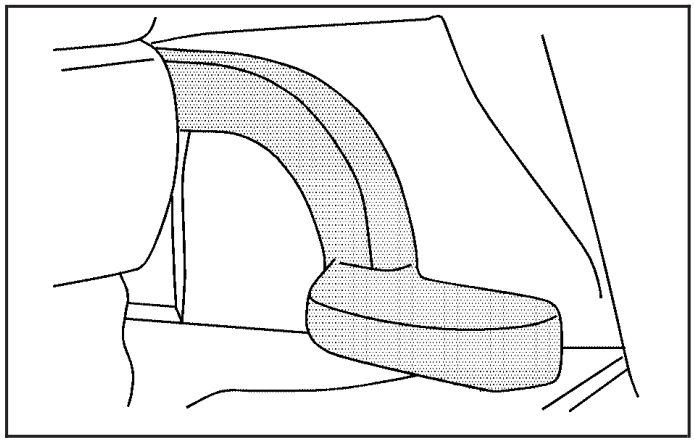

To tilt and telescope the wheel, pull down the lever. Then move the wheel to a comfortable position, pull up the lever to lock the wheel in place. The wheel can be adjusted up and down as well as forward and backward.

Turn Signal/Multifunction Lever

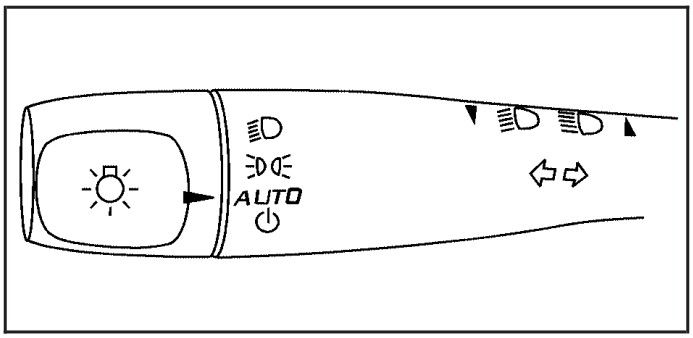

The lever on the left side of the steering column includes the following:

- Turn and Lane-Change Signals. See *Turn and Lane-Change Signals on page 3-8*.
- Headlamp High/Low-Beam Changer. See *Headlamp High/Low-Beam Changer on page 3-8*.
- Flash-to-Pass. See *Flash-to-Pass on page 3-8*.
- Exterior Light Control. See *Headlamps on page 3-14*.

Downloaded from www.Manualslib.com manuals search engine

Turn and Lane-Change Signals

The turn signal has two upward (for right) and two downward (for left) positions. These positions allow you to signal a turn or a lane change.

To signal a turn, move the lever all the way up or down. When the turn is finished, the lever will return automatically.

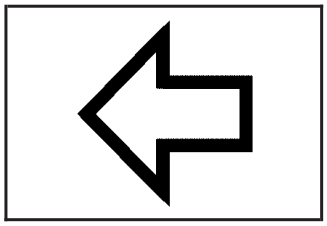

An arrow on the instrument panel cluster will flash in the direction of the turn or lane change.

To signal a lane change, just raise or lower the lever until the arrow starts to flash. Hold it there until you complete your lane change. The lever will return by itself when you release it.

As you signal a turn or a lane change, if the arrows flash rapidly, a signal bulb may be burned out and other drivers won't see your turn signal.

If a bulb is burned out, replace it to help avoid an accident. If the arrows don't go on at all when you signal a turn, check for burned-out bulbs and then check the fuse. See *Fuses on page 5-97*.

Headlamp High/Low-Beam Changer

To change the headlamps from low beam to high beam, push the turn signal/multifunction lever away from you.

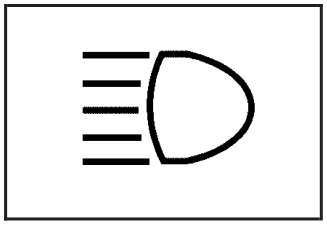

When the high beams are on, a light on the instrument panel cluster also will be on if the ignition is in ON.

To change the headlamps from high beam to low beam, pull the turn signal lever toward you.

Flash-to-Pass

This feature lets you use your high-beam headlamps to signal a driver in front of you that you want to pass.

To use it, pull the turn signal/multifunction lever toward you until the high-beam headlamps come on, then release the lever to turn them off.

Downloaded from www.Manualslib.com manuals search engine

Windshield Wipers

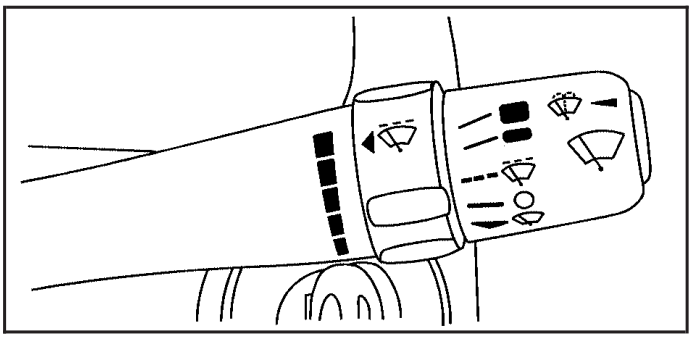

Use this lever, located on the right side of the steering wheel, to operate the windshield wipers.

(Off): Move the lever to this position to turn off the windshield wipers.

(Intermittent; Speed Sensitive Wipers): Move the lever to this position for intermittent or speed sensitive operation. When you select this position, the delay will vary depending on the vehicles speed, as well as, the manually selected delay.

(Delay): When the lever is in the intermittent position, turn the intermittent adjust band with this symbol on it up or down to set for a shorter or longer delay between wipes. To the left of the adjust band are bars, increasing in size from bottom to top, that indicate the frequency of the wipes. Smaller bars mean the wipers movement is less frequent. Larger bars mean the movement is more frequent.

(Low Speed): Move the lever up to the first setting past intermittent, for steady wiping at low speed.

(High Speed): Move the lever up to the second setting past intermittent, for wiping at high speed.

(Mist): Move the lever all the way down to this position for a single wiping cycle. Hold it there until the windshield wipers start; then let go. The windshield wipers will stop after one wiping cycle. If you want additional wiping cycles, hold the lever down longer.

Damaged wiper blades may prevent you from seeing well enough to drive safely. To avoid damage, be sure to clear ice and snow from the wiper blades before using them.

If the wiper blades are frozen to the windshield, carefully loosen or thaw them. If your blades do become damaged, get new blades or blade inserts.

Downloaded from www.Manualslib.com manuals search engine

Heavy snow or ice can overload your wiper motor. A circuit breaker will stop the motor until it cools. Clear away snow or ice to prevent an overload. If the motor gets stuck, turn the wipers off, clear away the snow or ice, and then turn the wipers back on.

As an added safety feature, if the wipers are on for more than 15 seconds, the vehicle's headlamps will turn on automatically. They will turn off 15 seconds after the wipers are turned off.

Windshield Washer

To wash your windshield, press the button at the end of the lever until the washers begin.

⚠ CAUTION:

In freezing weather, do not use your washer until the windshield is warmed. Otherwise the washer fluid can form ice on the windshield, blocking your vision.

When you release the button, the washers will stop, but the wipers will continue to wipe for about three times or will resume the speed you were using before.

Cruise Control

If your vehicle is equipped with cruise control, you can maintain a speed of about 25 mph (40 km/h) or more without keeping your foot on the accelerator. This can really help on long trips. Cruise control does not work at speeds below 25 mph (40 km/h).

⚠ CAUTION:

Cruise control can be dangerous where you cannot drive safely at a steady speed. So, do not use your cruise control on winding roads or in heavy traffic.

Cruise control can be dangerous on slippery roads. On such roads, fast changes in tire traction can cause needless wheel spinning, and you could lose control. Do not use cruise control on slippery roads.

Downloaded from www.Manualslib.com manuals search engine

Setting Cruise Control

⚠ CAUTION:

If you leave your cruise control on when you are not using cruise, you might hit a button and go into cruise when you do not want to. You could be startled and even lose control. Keep the cruise control switch off until you want to use cruise control.

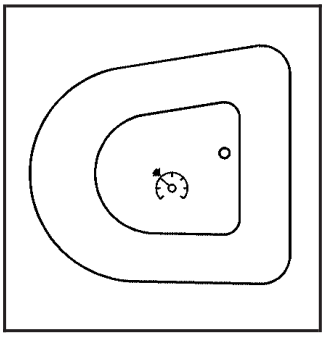

4–Spoke Steering Wheel Cruise Controls

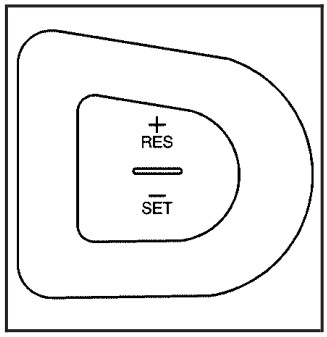

4–Spoke Steering Wheel Cruise Controls

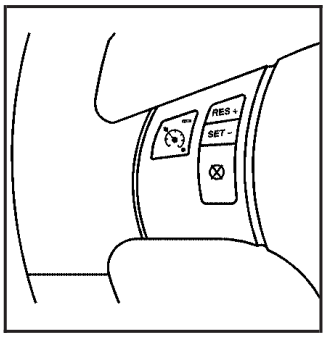

3–Spoke Steering Wheel Cruise Controls

The cruise control buttons are located on the steering wheel.

(On/Off): Press this symbol to turn the cruise control system on and off.

RES+ (Resume): Press this symbol to resume a set speed and to accelerate the speed.

SET– (Set): Press this symbol to set a speed and to decrease the speed.

CANCEL (3–Spoke Wheel Only): Press this symbol to cancel cruise control.

Downloaded from www.Manualslib.com manuals search engine

To set a speed do the following:

1. Press the on/off symbol to turn cruise control on. The indicator light on the button will come on.
2. Get to the speed you want.
3. Press the SET– symbol and release it. The cruise symbol will display in the instrument panel cluster to show the system is engaged.
4. Take your foot off the accelerator pedal.

When the brakes are applied, the cruise control shuts off.

If the vehicle is in cruise control and the Traction Control System (TCS) or Enhanced Traction System (ETS) begins to limit wheel spin, the cruise control will automatically disengage. See *Traction Control System (TCS) on page 4-9* and *Enhanced Traction System (ETS) on page 4-11*. When road conditions allow, the cruise control can be used again.

Resuming a Set Speed

Suppose you set your cruise control at a desired speed and then you apply the brakes. This, of course, disengages the cruise control. The cruise symbol in the instrument panel cluster will also go out indicating cruise is no longer engaged. To return to your previously set speed, you do not need to go through the set process again. Once at a speed of about 25 mph (40 km/h) or more, you can press the RES+ symbol briefly.

This will take you back up to your previously chosen speed and stay there.

Increasing Speed While Using Cruise Control

There are two ways to go to a higher speed.

- If the cruise control system is already engaged, press the RES+ symbol. Hold it there until you get up to the speed you want, and then release the button.
- To increase your speed in very small amounts, press the RES+ symbol briefly and then release it. Each time you do this, your vehicle will go about 1 mph (1.6 km/h) faster.

Downloaded from www.Manualslib.com manuals search engine

Reducing Speed While Using Cruise Control

If the cruise control system is already engaged,

- Push and hold the SET– symbol until you reach the lower speed you want, then release it.
- To slow down in very small amounts, push the SET– symbol briefly. Each time you do this, you will go about 1 mph (1.6 km/h) slower.

Passing Another Vehicle While Using Cruise Control

Use the accelerator pedal to increase your speed. When you take your foot off the pedal, your vehicle will slow down to the cruise control speed you set earlier.

Using Cruise Control on Hills

How well your cruise control will work on hills depends upon your speed, load, and the steepness of the hills. When going up steep hills, you may have to step on the accelerator pedal to maintain your vehicle's speed. When going downhill, you may have to brake or shift to a lower gear to keep your vehicle's speed down. Of course, applying the brakes ends cruise control. Many drivers find this to be too much trouble and do not use cruise control on steep hills.

Ending Cruise Control

There are four ways to disengage the cruise control:

- Step lightly on the brake pedal; when cruise control disengages, the cruise symbol in the instrument panel cluster will go out.
- Press the on/off button, this will turn off the cruise control system.
- Press the cancel button (3–spoke wheel only). When cruise control disengages, the cruise symbol in the instrument panel cluster will go out.
- Step on the clutch pedal; when the cruise control disengages, the cruise symbol in the instrument panel cluster will go out.

Erasing Speed Memory

When you turn off the cruise control or the ignition, your cruise control set speed memory is erased.

Downloaded from www.Manualslib.com manuals search engine

Headlamps

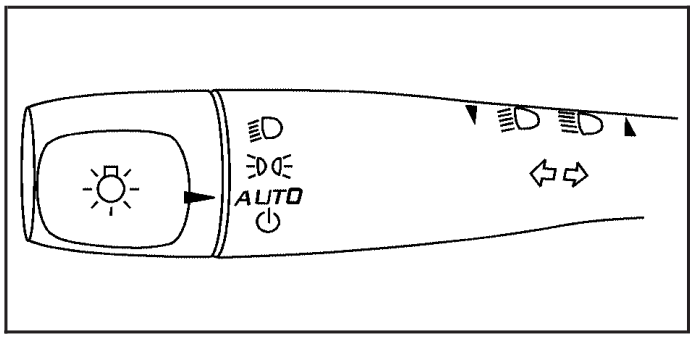

The lever on the left side of the steering column operates the exterior lamps.

The exterior lamp switch has the following four positions:

(Headlamps): This position turns on the headlamps, parking lamps, and taillamps.

(Parking Lamps): This position turns on the parking lamps and taillamps only.

AUTO (Automatic Headlamp System): This position automatically turns on the Daytime Running Lamps during daytime, and the headlamps, parking lamps, and taillamps at night.

(Off/On): This position is the momentary Off/On switch for the Automatic Headlamp System. In Canada, this only works when a vehicle with an automatic transaxle is in PARK (P).

When operating in AUTO, a momentary turn of the switch to off/on will turn off the Automatic Headlamp System. Rotating the switch to off/on again will turn the Automatic Headlamp System back on. The Automatic Headlamp System is always turned on at the beginning of an ignition cycle.

Headlamps on Reminder

If you open the driver's door and turn off the ignition while leaving the lamps on, you will hear a warning chime.

Headlamps Off in PARK (P)

This feature works for vehicles with an automatic transaxle when the ignition is on and it is dark outside. To turn the headlamps off when it is dark outside but keep other exterior lights on, turn the exterior lamp control to the parking lamp position. In this position, the parking lamps, sidemarker lamps, taillamps, license plate lamps and instrument panel lights will be on, but the headlamps will be off.

To turn on the headlamps along with the other lamps when it is dark outside, turn the exterior lamp control to the AUTO or headlamp position.

Downloaded from www.Manualslib.com manuals search engine

Delayed Headlamps

The delayed headlamps feature will continue to illuminate the headlamps for 20 seconds after the key is turned to OFF, then the headlamps will automatically turn off.

To override the 20 second delayed headlamp feature while it is active turn the turn signal/multifunction lever up one position and then back to AUTO.

Daytime Running Lamps (DRL)

Daytime Running Lamps (DRL) can make it easier for others to see the front of your vehicle during the day. DRL can be helpful in many different driving conditions, but they can be especially helpful in the short periods after dawn and before sunset. Fully functional daytime running lamps are required on all vehicles first sold in Canada. The vehicle has a light sensor on top of the instrument panel. Make sure it is not covered, or the head lamps will be on when not needed.

The DRL system will make your low-beam headlamps come on at a reduced brightness when the following conditions are met:

- The ignition is on.
- The exterior lamps control is in AUTO.
- The exterior lamps control is in the parking lamps only position (this applies only to vehicles that are first sold in Canada).
- The light sensor detects daytime light.
- The parking brake is released (manual transaxle) or the vehicle is not in PARK (automatic transaxle).

When the DRL system is on, the taillamps, sidemarker lamps, parking lamps, and instrument panel lights will not be illuminated unless you have turned the exterior lamps control to the parking lamp position.

As with any vehicle, you should turn on the regular headlamp system when you need it.

Downloaded from www.Manualslib.com manuals search engine

Automatic Headlamp System

When it is dark enough outside, your automatic headlamp system will turn on your headlamps at the normal brightness along with other lamps such as the taillamps, sidemarker, parking lamps and the instrument panel lights. The radio lights will also be dim.

Your vehicle is equipped with a light sensor on top of the middle part of the instrument panel, so be sure it is not covered which will cause the automatic headlamp system to be on whenever the ignition is on.

The automatic headlamp system may also be on when driving through a parking garage, heavy overcast weather or a tunnel. This is normal.

There is a delay in the transition between the daytime and nighttime operation of the DRL and the automatic headlamp systems so that driving under bridges or bright overhead street lights does not affect the system. The DRL and automatic headlamp systems will only be affected when the light sensor sees a change in lighting lasting longer than this delay.

If you start your vehicle in a dark garage, the automatic headlamp system will come on immediately. Once you leave the garage, it will take approximately one minute for the automatic headlamp system to change to DRL if it is light outside. During that delay, your instrument panel cluster may not be as bright as usual. Make sure your instrument panel brightness control is in the full bright position. See “Instrument Panel Brightness Control” under *Instrument Panel Brightness on page 3-17*.

To idle your vehicle with the automatic headlamp system off, turn the ignition on and set the exterior light switch to the off/on position. For Canadian vehicles, the transaxle must stay in PARK (P) (automatic transaxle) or the parking brake must be set (manual transaxle) for this function.

As with any vehicle, you should turn on the regular headlamps when you need them.

Downloaded from www.Manualslib.com manuals search engine

Fog Lamps

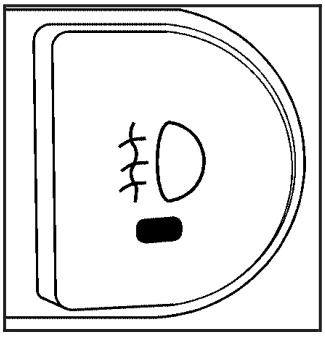

If equipped, the fog lamp button is located on the instrument panel, to the left of the steering wheel.

The ignition must be on to turn you fog lamps on.

Push the button to turn the fog lamps on. An indicator light in the button will glow when the fog lamps are on. Push the button again to turn the fog lamps off.

The parking lamps will automatically turn on and off when the fog lamps are turned on and off.

The fog lamps will turn off while the high-beam headlamps are turned on.

Some localities have laws that require the headlamps to be on along with the fog lamps.

Instrument Panel Brightness

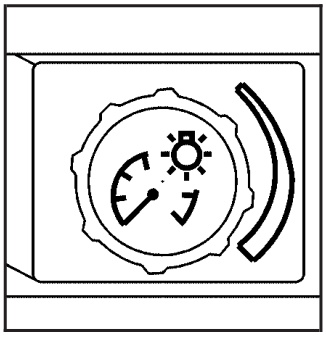

The control for this feature is located on the instrument panel to the right of the steering wheel.

Turn the knob clockwise to brighten the lights or counterclockwise to dim them.

Courtesy Lamps

If your vehicle has a retractable hardtop, it will have courtesy lamps in the rear passenger area of the vehicle. These lamps come on to make it easier to see while entering and exiting the vehicle. These lamps will come on when any door is opened and will only turn off when all doors are closed.

Downloaded from www.Manualslib.com manuals search engine

Dome Lamp

Your vehicle may have a dome lamp. Your vehicle may have a dome lamp without a switch. If your vehicle does have a dome lamp with a switch, the following are the settings.

◯ **(Off):** Move the lever to this position to turn the lamp off, even when a door is opened.

(Door): Move the lever to this position to turn the lamp on whenever a door is opened.

(On): Move the lever to this position to turn the dome lamp on.

Entry/Exit Lighting

The lamps inside your vehicle will go on when you open any door. These lamps will fade out after about 20 seconds after all of the doors have been closed or when the ignition is turned to ON. These lamps will also go on when you press the unlock symbol button or the horn symbol on the keyless entry system transmitter.

The lamps inside your vehicle will stay on for about 20 seconds after your key is removed from the ignition to provide an illuminated exit.

Overhead Console Reading Lamps

The vehicle may have reading lamps on the overhead console. These lamps will turn on when the doors are opened if the lamp switch is not in the OFF position. When the doors are closed, press the side of each lamp to turn them on and off. The reading lamps will also turn on if the dome lamp switch is in the ON position.

Trunk Lamp

The trunk lamp comes on when you open your trunk. If your vehicle has a retractable hardtop, you can press the side of the trunk lamp to turn it off when the trunk is open.

Battery Run-Down Protection

Your vehicle has a battery run-down feature designed to protect your vehicle's battery.

When any interior lamp (trunk, reading lamps, or dome lamp) is left on when the ignition is turned off, the battery run-down protection system will automatically shut the lamp off after 20 minutes. This will avoid draining the battery.

Downloaded from www.Manualslib.com manuals search engine

To reactivate the interior lamps, do one of the following:

- Open any door.
- Press any remote keyless entry transmitter button.
- Press the power door lock switch.
- Press the remote trunk release.
- Turn the lamp that was left on to off and then to on again.

Accessory Power Outlet(s)

Accessory power outlets can be used to connect auxiliary electrical equipment such as a cellular telephone or CB radio. The outlet can accept electrical equipment rated at a maximum of 20 Amps.

There are two accessory power outlets. Both are located on the center console below the climate controls unless the vehicle is equipped with enhanced traction or traction control system. If the vehicle is equipped with a traction system, one accessory power outlet is in the center storage console and the other is located on the center console below the climate controls.

To use an outlet, remove the protective cap. When not in use, always cover the outlet with the protective cap. The accessory power outlet is operational at all times.

Notice: **Leaving electrical equipment on for extended periods will drain the battery. Always turn off electrical equipment when not in use and do not plug in equipment that exceeds the maximum amperage rating.**

Certain electrical accessories may not be compatible with the accessory power outlet and could result in blown vehicle or adapter fuses. If you experience a problem, see your dealer for additional information on the accessory power outlet.

Notice: **Adding any electrical equipment to your vehicle may damage it or keep other components from working as they should. The repairs would not be covered by your warranty. Do not use equipment exceeding maximum amperage rating. Check with your dealer before adding electrical equipment.**

When adding electrical equipment, be sure to follow the proper installation instructions included with the equipment.

Notice: **Improper use of the power outlet can cause damage not covered by your warranty. Do not hang any type of accessory or accessory bracket from the plug because the power outlets are designed for accessory power plugs only.**

Downloaded from www.Manualslib.com manuals search engine

Climate Controls

Climate Control System

With this system you can control the heating, cooling and ventilation for your vehicle. If your vehicle has the remote start feature, the climate control system will function as part of the remote start feature. The system will return to the last settings the vehicle was at when it was turned off.

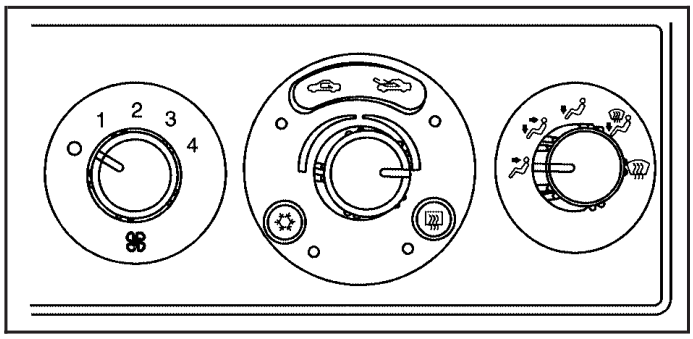

Operation

(Fan): Turn the left knob clockwise or counterclockwise to increase or decrease the fan speed. The fan must be on to run the air-conditioning compressor.

To change the air delivery settings, turn the right knob to select one of the following:

(Vent): This mode directs air to the instrument panel outlets.

(Bi-Level): This mode directs half of the air to the instrument panel outlets, and the remaining air to the floor outlets. Some air may be directed toward the side windows.

(Floor): This mode directs most of the air to the floor outlets with some air directed to the side window outlets.

(Outside Air): Press the right side of this button to turn the outside air mode on. When this mode is selected, air from outside the vehicle will circulate throughout your vehicle. When the button is pressed, an indicator light will come on to let you know that it is activated. The outside air mode can be used with all modes, but it cannot be used with the recirculation mode. Pressing this button will cancel the recirculation mode.

Downloaded from www.Manualslib.com manuals search engine

(Recirculation): Press the left side of the button to turn the recirculation mode on. When recirculation mode is selected, the air inside the vehicle will be recirculated through the climate control system and the vehicle, not from outside your vehicle. This mode is helpful when you are trying to limit odors from entering your vehicle and for maximum air conditioning performance in hot weather. When the button is pressed, an indicator light above the button will come on to let you know that it is activated. The recirculation indicator light will blink three times if you try to use recirculation in a mode that it can not be used in. Only use this mode when it is needed for comfort, since window fogging will rapidly occur if the air conditioning compressor is not engaged.

Pressing this button will cancel the outside air mode. When you switch to the defog or defrost modes the system will automatically move from recirculation to outside air. When you move the mode knob back to another air delivery mode, the system will move back into recirculation. When the vehicle or fan is turned off and back on, the system will default to outside air automatically. Only use recirculation mode when it is needed for comfort, since window fogging may occur.

Temperature Control: Turn the center knob clockwise or counterclockwise to increase or decrease the temperature inside your vehicle.

When it's cold outside 0°F (–18°C) or lower, use the engine coolant heater, if equipped, to provide warmer air faster to your vehicle. An engine coolant heater warms the coolant that the engine uses to provide heat to warm the inside of your vehicle. For more information, see *Engine Coolant Heater on page 2-27*.

(Air Conditioning): Press this button to turn the air conditioning system on or off. When the air conditioning button is pressed, an indicator light will come on to let you know that air conditioning is activated.

On hot days, open the windows to let hot inside air escape; then close them. This helps to reduce the time it takes for your vehicle to cool down. It also helps the system to operate more efficiently.

For quick cool down on hot days, do the following:

1. Select the vent mode.
2. Select the highest fan speed.
3. Select air conditioning.
4. Select the recirculation mode.
5. Select the coolest temperature.

Using these settings together for long periods of time may cause the air inside of your vehicle to become too dry. To prevent this from happening, after the air in your vehicle has cooled, turn the recirculation mode off.

The air-conditioning system removes moisture from the air, so you may sometimes notice a small amount of water dripping underneath your vehicle while idling or after turning off the engine. This is normal.

Downloaded from www.Manualslib.com manuals search engine

Defogging and Defrosting

Fog on the inside of windows is a result of high humidity (moisture) condensing on the cool window glass. This can be minimized if the climate control system is used properly. There are two modes to choose from to clear fog or frost from your windshield. Use the defog mode to clear the windows of fog or moisture and warm the passengers. Use the defrost mode to remove fog or frost from the windshield more quickly.

Turn the right knob to select the defog or defrost mode.

(Defog): This mode splits the air between the windshield and the floor outlets with a small amount directed to the side windows. When you select this mode, the system turns off recirculation automatically. The air-conditioning compressor will run unless the outside temperature is at or below freezing. The air-conditioning compressor will operate although the indicator light will not be on. The air-conditioning indicator light will turn off when defog is selected. If the air-conditioning button is pressed while in defog mode, the indicator light will turn on. If the button is pressed again, the light will turn off. The recirculation mode cannot be selected while in the defog mode. Do not drive the vehicle until all the windows are clear.

(Defrost): This mode directs most of the air to the windshield with some air directed to the floor vents. In this mode, the system will automatically force outside air into your vehicle. The air-conditioning compressor will run unless the outside temperature is at or below freezing. The air-conditioning compressor will operate although the indicator light will not be on. The air-conditioning indicator light will turn off when defrost is selected. If the air-conditioning button is pressed while in defrost mode, the indicator light will turn on. If the button is pressed again, the light will turn off. Recirculation cannot be selected while in the defrost mode.

To help clear the windshield quickly, do the following:

1. Select the defrost mode.
2. Select the highest temperature.
3. Select the highest fan speed.

Downloaded from www.Manualslib.com manuals search engine

Rear Window Defogger

The rear window defogger uses a warming grid to remove fog or frost from the rear window.

REAR: Press this button to turn the rear window defogger on or off. An indicator light will come on to let you know that the rear window defogger is activated. Be sure to clear as much snow from the rear window as possible.

If driving below 50 mph (80 km/h), the rear window defogger will turn off about 15 minutes after the button is pressed. If turned on again, the defogger will only run for about seven minutes before turning off. The defogger can also be turned off by pressing the button again or by turning off the engine.

If your vehicle's speed is maintained above 50 mph (80 km/h), the rear window defogger will remain on once the button is pressed.

If your vehicle has the remote start feature, the rear defogger will automatically be turned on if it is cold outside. The indicator light will be on. When the vehicle transitions out of the remote start mode, the rear defogger will turn off.

Notice: **Do not use anything sharp on the inside of the rear window. If you do, you could cut or damage the warming grid, and the repairs would not be covered by your warranty. Do not attach a temporary vehicle license, tape, a decal or anything similar to the defogger grid.**

Automatic Climate Control System

If your vehicle has this system, you can automatically control the heating, cooling and ventilation in your vehicle.

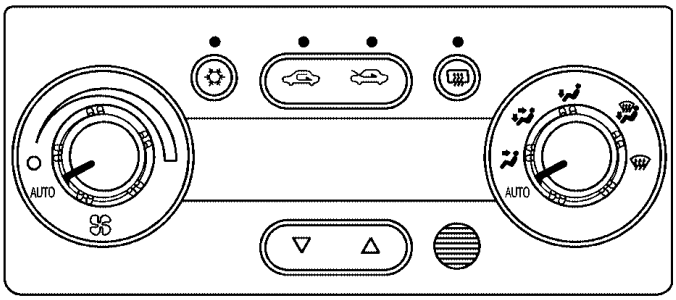

Automatic Operation

AUTO (Automatic): Select AUTO on both the fan speed control and the air delivery mode control knobs to activate the automatic system. When automatic operation is active the system will control the inside temperature and air delivery.

Downloaded from www.Manualslib.com manuals search engine

Use the steps below to place the entire system in automatic mode:

1. Place the fan knob and the mode knob to AUTO.

   The display will now show the current set temperature. When auto is selected, the air conditioning operation and air inlet will be automatically controlled. The air conditioning compressor will run when the outside temperature is over about 40°F (4°C). The air inlet will normally be set to outside air. If it's hot outside, the air inlet may automatically switch to recirculate inside air to help quickly cool down your vehicle.

2. Set the temperature.

   To find your comfort setting, start with an initial temperature setting and allow about 20 minutes for the system to regulate. Press the up or down arrow temperature buttons to adjust the temperature setting as necessary. If you choose the temperature setting of 60°F (15°C) the system will remain at the maximum cooling setting. If you choose the temperature setting of 90°F (32°C) the system will remain at the maximum heat setting. Choosing either maximum setting will not cause the vehicle to heat or cool any faster.

   Be careful not to cover the sensor located on the top of the instrument panel near the windshield. This sensor regulates air temperature based on sun load, and also turns on your headlamps.

   Also be careful not to cover the sensor grille on the lower right side of the climate control faceplate. This senses the inside vehicle temperature needed for proper regulation.

   To avoid blowing cold air at start-up in cold weather, the system will delay turning on the fan until warm air is available. The length of delay depends on the engine coolant temperature. Turning the fan knob will override this delay and change the fan to a selected speed.

Downloaded from www.Manualslib.com manuals search engine

If your vehicle has the remote start feature, the climate control display will initially show “AS” in place of the temperature to indicate the remote start has been activated. The system will automatically regulate the temperature according to the following:

- If inside air temperature is below 72°F (22°C), the system will automatically adjust to the following settings: highest fan speed, defrost mode, recirculation, and the full heat position.
- If inside air temperature is above 79°F (26°C) the system will automatically adjust to the following settings: highest fan speed, panel mode, recirculation, and full cold position.
- If inside air temperature is between 72°F (22°C) and 79°F (26°C), the system will adjust automatically to the following settings: medium fan speed, panel mode, recirculation, and the full cold position.

The climate control will change back to manual operation by turning on the vehicle with the key.

Manual Operation

You may manually adjust the air delivery mode or fan speed.

(Off): Select this position on the fan knob to turn off the entire climate control system. Outside air will still enter the vehicle, and will be directed to the floor. This direction can be changed by changing the mode position. The temperature can also be adjusted using either the up or down arrow temperature buttons.

(Fan): The knob with the fan symbol allows you to manually adjust the fan speed.

(Vent): This mode directs air to the instrument panel outlets.

(Bi-Level): This mode directs half of the air to the instrument panel outlets, and the remaining air to the floor outlets.

Downloaded from www.Manualslib.com manuals search engine

(Floor): This mode directs most of the air to the floor outlets with some air directed to the side window outlets.

The right knob can also be used to select defog or defrost modes. Information on defogging and defrosting can be found later in this section.

(Outside Air): Press the right side of this button to turn the outside air mode on. When this mode is selected, air from outside the vehicle will circulate throughout your vehicle. When the button is pressed, an indicator light will come on to let you know that it is activated. The outside air mode can be used with all modes, but it cannot be used with the recirculation mode. Pressing this button will cancel the recirculation mode.

(Recirculation): Press the left side of the button to turn the recirculation mode on. When recirculation mode is selected, the air inside the vehicle will be recirculated through the climate control system and the vehicle, not from outside your vehicle. This mode is helpful when you are trying to limit odors from entering your vehicle and for maximum air conditioning performance in hot weather. When the button is pressed, an indicator light above the button will come on to let you know that it is activated. The recirculation indicator light will blink three times if you try to use recirculation in a mode that it can not be used in. Only use this mode when it is needed for comfort, since window fogging will rapidly occur if the air conditioning compressor is not engaged.

Pressing this button cancels the auto recirculation feature. Each time the vehicle is started, the system will revert to the auto recirculation function.

If you select recirculation while in defrost, defog or floor, the light on the button will flash three times and go out to let you know this is not allowed. This is to prevent window fogging.

When the weather is cool or damp, operating the system in recirculation for extended periods of time may cause fogging of the vehicle's windows. To clear the fog, select either defog or defrost. Make sure the air conditioning is on. You will want to allow the air conditioning to run automatically to help dehumidify the air.

Downloaded from www.Manualslib.com manuals search engine

Temperature Control: Press the up and down arrows to increase or decrease the temperature inside the vehicle.

(Air Conditioning): Press this button to turn the air conditioning compressor on and off. A light above the button will illuminate when the air conditioning is on.

When air conditioning is selected or in AUTO mode, the system will run the air conditioning automatically to cool and dehumidify the air entering the vehicle.

On hot days, open the windows long enough to let hot inside air escape. This reduces the time it takes for your vehicle to cool down. Then keep your windows closed for the air conditioner to work its best.

On cool, but sunny days while using manual operation of the automatic system, use bi-level to deliver warm air to the floor and cooler air to the instrument panel outlets. To warm or cool the air delivered, press the temperature buttons to the desired setting.

In AUTO mode the system will cool and dehumidify the air inside the vehicle. Also while in AUTO mode, the system will maximize its performance by using recirculation as necessary.

Heating: On cold days when using manual operation of the automatic system, choose floor mode to deliver air to the floor outlets. To warm or cool the air delivered, push the temperature buttons to the desired setting.

If you want to use the automatic mode, turn the knob to AUTO and adjust the temperature by pressing the temperature buttons.

The heater works best if you keep the windows closed while using it.

Defogging and Defrosting

You can use either defog or front defrost to clear fog or frost from your windshield. Use the defog mode to clear the windows of fog or moisture. Use the front defrost button to defrost the front windshield.

(Defog): Use this setting to clear the windows of fog or moisture. Turn the mode knob to this position to select this setting. This setting will deliver air to the floor and windshield outlets.

(Defrost): Turn the mode knob to this position to defrost the windshield. The system will automatically control the fan speed if you select defrost from AUTO mode. If the outside temperature is 40°F (4°C) or warmer, your air conditioning compressor will automatically run to help dehumidify the air and dry the windshield. The air conditioning indicator light will blink three times if you try to turn off the compressor while in this mode.

Downloaded from www.Manualslib.com manuals search engine

Rear Window Defogger

The rear window defogger uses a warming grid to remove fog from the rear window.

(Rear): Press this button to turn the rear window defogger on or off. An indicator light above the button will come on to let you know that the rear window defogger is activated.

If driving below 50 mph (80 km/h), the rear window defogger will turn off about 15 minutes after the button is pressed. If you need additional warming time, press the button again.

If your vehicle's speed is maintained above 50 mph (80 km/h), the rear window defogger will remain on once the button is pressed.

If your vehicle has the remote start feature, the rear defogger will automatically be turned on if it is cold outside. The indicator light will not be on. When the vehicle transitions out of remote start mode the rear defogger will turn off.

Notice: **Using a razor blade or sharp object to clear the inside rear window may damage the rear window defogger. Repairs would not be covered by your warranty. Do not clear the inside of the rear window with sharp objects.**

Outlet Adjustment

Rotate the instrument panel outlets and move the louvers on the outlets to change the direction and amount of airflow in your vehicle.

Operation Tips

- Clear away any ice, snow or leaves from the air inlets at the base of the windshield that may block the flow of air into your vehicle.
- Use of non-GM approved hood deflectors may adversely affect the performance of the system.
- Keep the path under the front seats clear of objects to help circulate the air inside of your vehicle more effectively.
- When an objectionable odor outside the vehicle is encountered, use the recirculation mode, with the temperature knob at a comfortable setting to prevent the odor from entering the vehicle through the ventilation system. This can be helpful when driving through a long tunnel with poor ventilation. However, extended usage of this mode in cold or cool weather can cause window fogging.

Downloaded from www.Manualslib.com manuals search engine

Warning Lights, Gages, and Indicators

This part describes the warning lights and gages that may be on your vehicle. The pictures will help you locate them.

Warning lights and gages can signal that something is wrong before it becomes serious enough to cause an expensive repair or replacement. Paying attention to your warning lights and gages could also save you or others from injury.

Warning lights come on when there may be or is a problem with one of your vehicle's functions. As you will see in the details on the next few pages, some warning lights come on briefly when you start the engine just to let you know they are working. If you are familiar with this section, you should not be alarmed when this happens.

Gages can indicate when there may be or is a problem with one of your vehicle's functions. Often gages and warning lights work together to let you know when there is a problem with your vehicle.

When one of the warning lights comes on and stays on when you are driving, or when one of the gages shows there may be a problem, check the section that tells you what to do about it. Please follow this manual's advice. Waiting to do repairs can be costly — and even dangerous. So please get to know your warning lights and gages. They are a big help.

Instrument Panel Cluster

Your instrument panel cluster is designed to let you know at a glance how your vehicle is running. You will know how fast you are going, how much fuel you have, and many other things you will need to drive safely and economically.

Downloaded from www.Manualslib.com manuals search engine

Your vehicle has this cluster or one very similar to it. It includes indicator warning lights and gages that are explained on the following pages. Be sure to read about them.

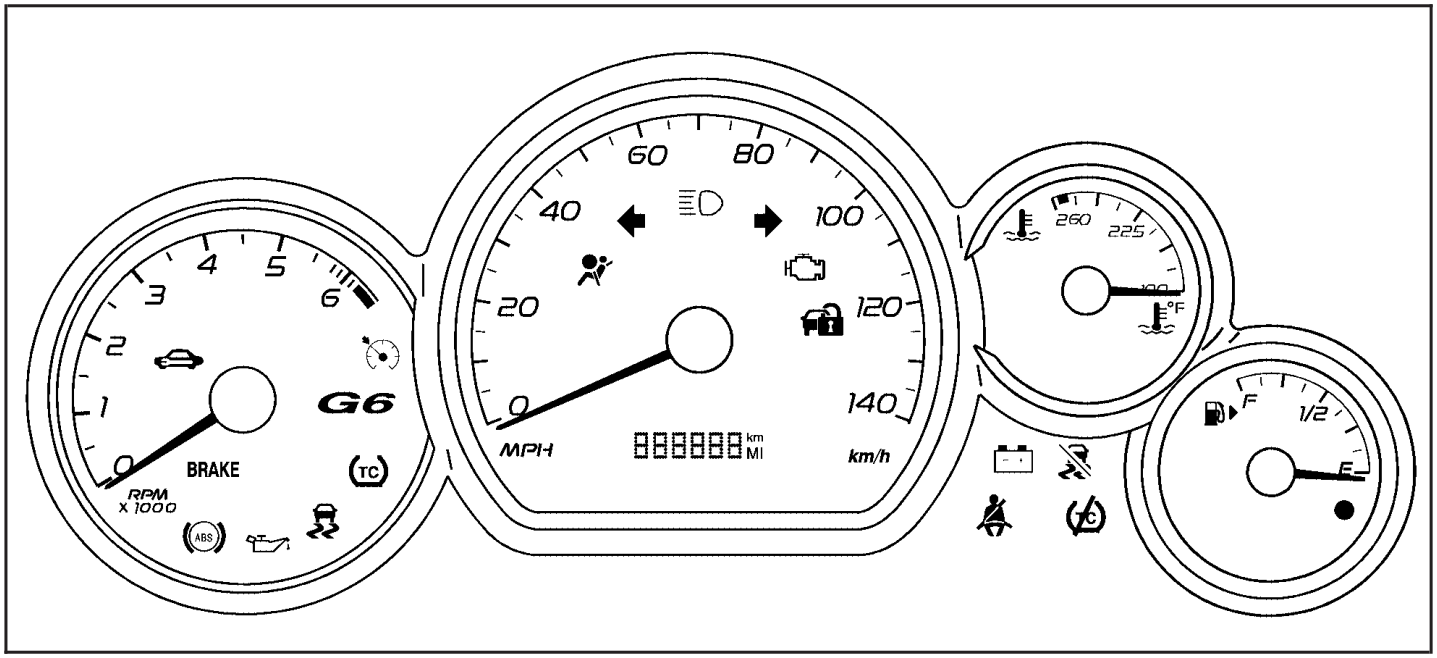

United States shown, Canada similar

Downloaded from www.Manualslib.com manuals search engine

Speedometer and Odometer

Your speedometer lets you see your speed in both miles per hour (mph) and kilometers per hour (km/h).

Your odometer shows how far your vehicle has been driven, in either miles (used in the United States) or kilometers (used in Canada).

When in manual shift mode, the odometer will change from the vehicle's mileage to the letter M, for manual mode, and a number indicating the requested gear range when moving the shift lever forward or rearward. For more information see *Automatic Transaxle Operation on page 2-28*.

Your vehicle has a tamper resistant odometer.

Repair or replacement of your instrument panel cluster should only be performed by a qualified GM service center.

Trip Odometer

The trip odometer can display how far you have driven since you last reset it.

For more information see *DIC Operation and Displays on page 3-46*.

Tachometer

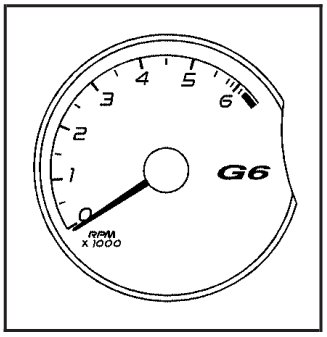

The tachometer shows your engine speed in revolutions per minute (rpm).

Notice: **If you operate the engine with the tachometer in the shaded warning area, your vehicle could be damaged, and the damages would not be covered by your warranty. Do not operate the engine with the tachometer in the shaded warning area.**

Downloaded from www.Manualslib.com manuals search engine

Safety Belt Reminder Light

When the key is turned to on or start, a chime will come on for several seconds to remind people to fasten their safety belts, unless the driver's safety belt is already buckled.

The safety belt light will also come on and stay on for several seconds, then it will flash for several more.

This chime and light will be repeated if the driver remains unbuckled and the vehicle is in motion.

If the driver's belt is already buckled, neither the chime nor the light will come on.

Passenger Safety Belt Reminder Light

Several seconds after the key is turned to on or start, a chime will sound for several seconds to remind the front passenger to buckle their safety belt. This would only occur if the passenger airbag is enabled. See *Passenger Sensing System on page 1-65* for more information. The passenger safety belt light will also come on and stay on for several seconds, then it will flash for several more.

This chime and light will be repeated if the passenger remains unbuckled and the vehicle is in motion.

If the passenger's safety belt is buckled, neither the chime nor the light will come on.

Downloaded from www.Manualslib.com manuals search engine

Airbag Readiness Light

There is an airbag readiness light on the instrument panel, which shows the airbag symbol. The system checks the airbag's electrical system for malfunctions. The light tells you if there is an electrical problem. The system check includes the airbag sensors, the airbag modules, the wiring and the diagnostic module. For more information on the airbag system, see *Airbag System on page 1-56*.

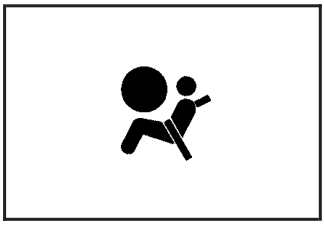

This light will come on when you start your vehicle, and it will flash for a few seconds. Then the light should go out. This means the system is ready.

If the airbag readiness light stays on after you start the vehicle or comes on when you are driving, your airbag system may not work properly. Have your vehicle serviced right away.

⚠ CAUTION:

If the airbag readiness light stays on after you start your vehicle, it means the airbag system may not be working properly. The airbags in your vehicle may not inflate in a crash, or they could even inflate without a crash. To help avoid injury to yourself or others, have your vehicle serviced right away if the airbag readiness light stays on after you start your vehicle.

The airbag readiness light should flash for a few seconds when you turn the vehicle on. If the light does not come on then, have it fixed so it will be ready to warn you if there is a problem.

If there is a problem with the airbag system in your vehicle, the Service airbag message will appear on the DIC display. See *DIC Warnings and Messages on page 3-48* for more information.

Downloaded from www.Manualslib.com manuals search engine

Passenger Airbag Status Indicator

Your vehicle has the passenger sensing system. Your instrument panel has a passenger airbag status indicator.

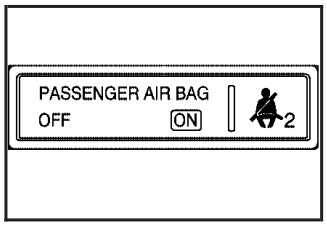

Passenger Airbag Status Indicator – United States

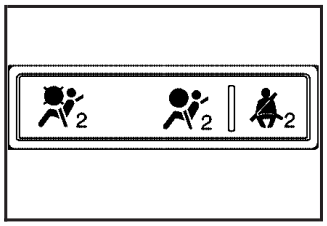

Passenger Airbag Status Indicator – Canada

When the ignition key is turned to ON or START, the passenger airbag status indicator will light ON and OFF, or the symbol for on and off, for several seconds as a system check. If you use remote start to start your vehicle, if equipped, you may not see the system check. Then, after several more seconds, the status indicator will light either ON or OFF, or either the on or off symbol to let you know the status of the right front passenger's frontal airbag.

If the word ON or the on symbol is lit on the passenger airbag status indicator, it means that the right front passenger's frontal airbag is enabled (may inflate).

⚠ CAUTION:

If the on indicator comes on when you have a rear-facing child restraint installed in the right front passenger's seat, it means that the passenger sensing system has not turned off the passenger's frontal airbag. A child in a rear-facing child restraint can be seriously injured or killed if the right front passenger's airbag inflates. This is because the back of the rear-facing child restraint would be very close to the inflating airbag. Do not use a rear-facing child restraint in the right front passenger's seat if the airbag is turned on.

Your vehicle has a rear seat that will accommodate a rear-facing child restraint. A label on your sun visor says, "Never put a rear-facing child seat in the front." This is because the risk to the rear-facing child is so great, if the airbag deploys.

Downloaded from www.Manualslib.com manuals search engine

⚠ CAUTION:

Even though the passenger sensing system is designed to turn off the passenger's frontal airbag if the system detects a rear-facing child restraint, no system is failsafe, and no one can guarantee that an airbag will not deploy under some unusual circumstance, even though it is turned off. We recommend that rear-facing child restraints be secured in the rear seat, even if the airbag is off.

If the word OFF or the off symbol is lit on the airbag status indicator, it means that the passenger sensing system has turned off the right front passenger's frontal airbag. See *Passenger Sensing System on page 1-65* for more on this, including important safety information.

If, after several seconds, all status indicator lights remain on, or if there are no lights at all, there may be a problem with the lights or the passenger sensing system. See your dealer for service.

⚠ CAUTION:

If the off indicator and the airbag readiness light ever come on together, it means that something may be wrong with the airbag system. If this ever happens, have the vehicle serviced promptly, because an adult-size person sitting in the right front passenger seat may not have the protection of the frontal airbag. See *Airbag Readiness Light on page 3-33*.

Downloaded from www.Manualslib.com manuals search engine

Charging System Light

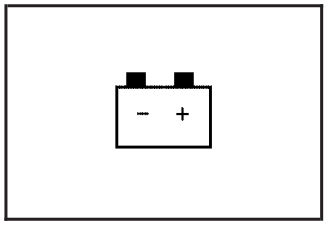

The charging system light will come on for a few seconds when you turn on the ignition as a check to show you it is working.

If it stays on, or comes on while you are driving and you hear a chime, you may have a problem with the electrical charging system. It could indicate that you have a loose generator drive belt or another electrical problem. Have it checked right away. Driving while this light is on could drain your battery.

If you must drive a short distance with the light on, be certain to turn off all your accessories, such as the radio and air conditioner.

Brake System Warning Light

Your vehicle's hydraulic brake system is divided into two parts. If one part isn't working, the other part can still work and stop you. For good braking, though, you need both parts working well.

If the warning light comes on, there is a brake problem. Have your brake system inspected right away.

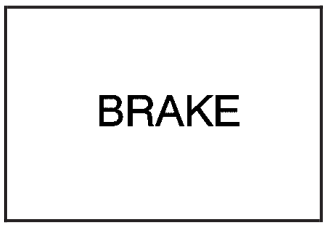

United States

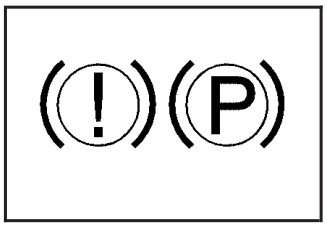

Canada

This light should come on briefly when you turn the ignition key to ON. If it doesn't come on then, have it fixed so it will be ready to warn you if there's a problem.

Downloaded from www.Manualslib.com manuals search engine

When the ignition is on, the brake system warning light will also come on when you set your parking brake. The light will stay on if your parking brake doesn't release fully. If it stays on after your parking brake is fully released, it means you have a brake problem.

If the light comes on while you are driving, pull off the road and stop carefully. You may notice that the pedal is harder to push. Or, the pedal may go closer to the floor. It may take longer to stop. If the light is still on, have the vehicle towed for service. See *Towing Your Vehicle on page 4-38*.

⚠ CAUTION:

Your brake system may not be working properly if the brake system warning light is on. Driving with the brake system warning light on can lead to an accident. If the light is still on after you have pulled off the road and stopped carefully, have the vehicle towed for service.

Anti-Lock Brake System Warning Light

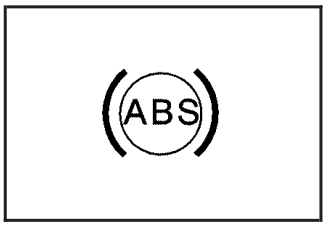

If your vehicle has the anti-lock brake system, the light will come on when your engine is started and may stay on for several seconds. That's normal.

If the light stays on, turn the ignition to OFF. Or, if the light comes on when you're driving, stop as soon as possible and turn the ignition off. Then start the engine again to reset the system. If the light still stays on, or comes on again while you're driving, your vehicle needs service. If the regular brake system warning light isn't on, you still have brakes, but you don't have anti-lock brakes. If the regular brake system warning light is also on, you don't have anti-lock brakes and there's a problem with your regular brakes. See *Brake System Warning Light on page 3-36*.

The anti-lock brake system warning light will come on briefly when you turn the ignition key to ON. This is normal. If the light doesn't come on then, have it fixed so it will be ready to warn you if there is a problem.

Downloaded from www.Manualslib.com manuals search engine

Traction Control System (TCS) Warning Light

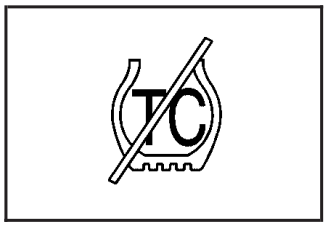

If the traction control warning light comes on and stays on, there may be a problem with the traction control system.

See *Traction Control System (TCS) on page 4-9* for more information.

Traction Control System Active Light

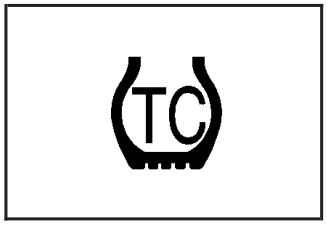

This light will appear when the traction control system is limiting wheel spin. You may feel or hear the system working, but this is normal.

Slippery road conditions may exist if this light appears, so adjust your driving accordingly. The light will stay on for a few seconds after the traction control system stops limiting wheel spin. See *Traction Control System (TCS) on page 4-9* for more information.

Enhanced Traction System Warning Light

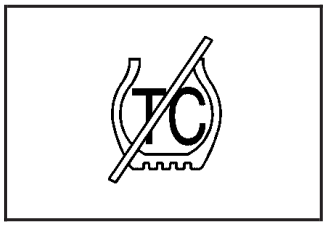

If the enhanced traction control warning light comes on and stays on, there may be a problem with the enhanced traction control system.

See *Enhanced Traction System (ETS) on page 4-11* for more information.

Downloaded from www.Manualslib.com manuals search engine

Enhanced Traction System Active Light

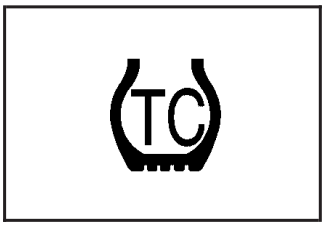

This light will appear when the enhanced traction control system is limiting wheel spin. You may feel or hear the system working, but this is normal.

Slippery road conditions may exist if this light appears, so adjust your driving accordingly. The light will stay on for a few seconds after the enhanced traction control system stops limiting wheel spin. See *Enhanced Traction System (ETS) on page 4-11* for more information.

StabiliTrak® Not Ready Light

If your vehicle has the StabiliTrak® system, this light will come on if there is a problem detected with the StabiliTrak® system.

For more information, see *StabiliTrak® System on page 4-12*.

StabiliTrak® Indicator Light

If your vehicle has the StabiliTrak® system, this light will come on when the StabiliTrak® system is activated.

For more information, see *StabiliTrak® System on page 4-12*.

Downloaded from www.Manualslib.com manuals search engine

Engine Coolant Temperature Gage

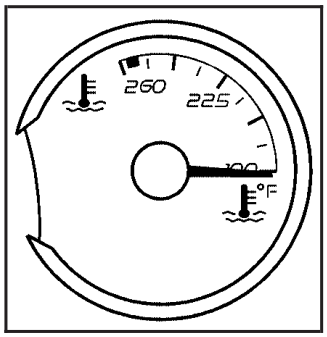

United States

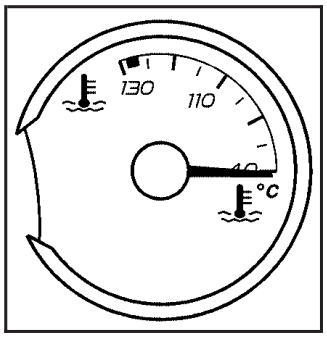

Canada

This gage shows the engine coolant temperature. If the gage pointer moves into the red area, the light comes on and you hear a chime, your engine is too hot! It means that your engine coolant has overheated. See *Engine Overheating on page 5-30*.

Malfunction Indicator Lamp

Check Engine Light

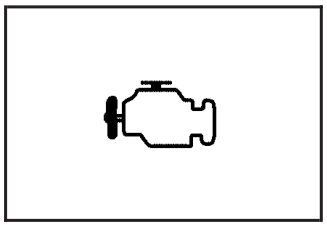

Your vehicle is equipped with a computer which monitors operation of the fuel, ignition, and emission control systems.

This system is called OBD II (On-Board Diagnostics-Second Generation) and is intended to assure that emissions are at acceptable levels for the life of the vehicle, helping to produce a cleaner environment. The check engine light comes on to indicate that there is a problem and service is required. Malfunctions often will be indicated by the system before any problem is apparent. This may prevent more serious damage to your vehicle. This system is also designed to assist your service technician in correctly diagnosing any malfunction.

Downloaded from www.Manualslib.com manuals search engine

Notice: **If you keep driving your vehicle with this light on, after awhile, your emission controls may not work as well, your fuel economy may not be as good, and your engine may not run as smoothly. This could lead to costly repairs that may not be covered by your warranty.**

Notice: **Modifications made to the engine, transaxle, exhaust, intake, or fuel system of your vehicle or the replacement of the original tires with other than those of the same Tire Performance Criteria (TPC) can affect your vehicle's emission controls and may cause this light to come on. Modifications to these systems could lead to costly repairs not covered by your warranty. This may also result in a failure to pass a required Emission Inspection/Maintenance test.**

This light should come on, as a check to show you it is working, when the ignition is on and the engine is not running. If the light does not come on, have it repaired. This light will also come on during a malfunction in one of two ways:

- **Light Flashing** — A misfire condition has been detected. A misfire increases vehicle emissions and may damage the emission control system on your vehicle. Diagnosis and service may be required.
- **Light On Steady** — An emission control system malfunction has been detected on your vehicle. Diagnosis and service may be required.

If the Light is Flashing

The following may prevent more serious damage to your vehicle:

- Reducing vehicle speed
- Avoiding hard accelerations
- Avoiding steep uphill grades
- If you are towing a trailer, reduce the amount of cargo being hauled as soon as it is possible

If the light stops flashing and remains on steady, see "If the Light Is On Steady" following.

If the light continues to flash, when it is safe to do so, stop the vehicle. Find a safe place to park your vehicle. Turn the key off, wait at least 10 seconds and restart the engine. If the light remains on steady, see "If the Light Is On Steady" following. If the light is still flashing, follow the previous steps, and see your dealer for service as soon as possible.

Downloaded from www.Manualslib.com manuals search engine

If the Light Is On Steady

You may be able to correct the emission system malfunction by considering the following:

Did you recently put fuel into your vehicle?

If so, reinstall the fuel cap, making sure to fully install the cap. See *Filling the Tank on page 5-8*. The diagnostic system can determine if the fuel cap has been left off or improperly installed. A loose or missing fuel cap will allow fuel to evaporate into the atmosphere. A few driving trips with the cap properly installed should turn the light off.

Did you just drive through a deep puddle of water?

If so, your electrical system may be wet. The condition will usually be corrected when the electrical system dries out. A few driving trips should turn the light off.

Have you recently changed brands of fuel?

If so, be sure to fuel your vehicle with quality fuel. See *Gasoline Octane on page 5-5*. Poor fuel quality will cause your engine not to run as efficiently as designed. You may notice this as stalling after start-up, stalling when you put the vehicle into gear, misfiring, hesitation on acceleration, or stumbling on acceleration. (These conditions may go away once the engine is warmed up.) This will be detected by the system and cause the light to turn on.

If you experience one or more of these conditions, change the fuel brand you use. It will require at least one full tank of the proper fuel to turn the light off.

If none of the above steps have made the light turn off, your dealer can check the vehicle. Your dealer has the proper test equipment and diagnostic tools to fix any mechanical or electrical problems that may have developed.

Emissions Inspection and Maintenance Programs

Some state/provincial and local governments have or may begin programs to inspect the emission control equipment on your vehicle. Failure to pass this inspection could prevent you from getting a vehicle registration.

Here are some things you need to know to help your vehicle pass an inspection:

Your vehicle will not pass this inspection if the check engine light is on or not working properly.

Downloaded from www.Manualslib.com manuals search engine

Your vehicle will not pass this inspection if the OBD (on-board diagnostic) system determines that critical emission control systems have not been completely diagnosed by the system. The vehicle would be considered not ready for inspection. This can happen if you have recently replaced your battery or if your battery has run down. The diagnostic system is designed to evaluate critical emission control systems during normal driving. This may take several days of routine driving. If you have done this and your vehicle still does not pass the inspection for lack of OBD system readiness, your GM dealer can prepare the vehicle for inspection.

Oil Pressure Light

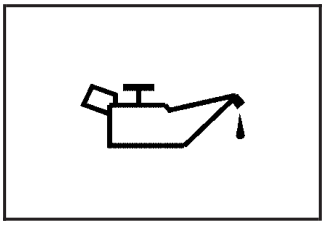

If you have low engine oil pressure, this light will stay on after you start your engine, or come on and you will hear a chime when you are driving.

This indicates that your engine is not receiving enough oil. The engine could be low on oil, or could have some other oil problem. Have it fixed immediately.

This light will come on briefly when you turn on the ignition as a check to show you it is working. If it does not come on with the ignition on, you may have a problem with the bulb. Have it fixed right away.

⚠ CAUTION:

Do not keep driving if the oil pressure is low. If you do, your engine can become so hot that it catches fire. You or others could be burned. Check your oil as soon as possible and have your vehicle serviced.

Notice: **Lack of proper engine oil maintenance may damage the engine. The repairs would not be covered by your warranty. Always follow the maintenance schedule in this manual for changing engine oil.**

Downloaded from www.Manualslib.com manuals search engine

Security Light

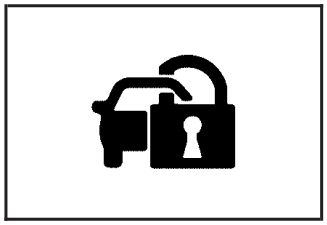

For information regarding this light, see *Theft-Deterrent Systems on page 2-19*.

Cruise Control Light

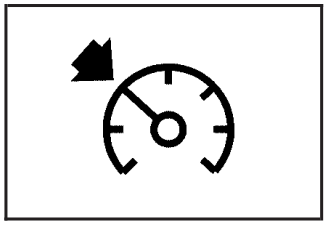

This light comes on whenever you set your cruise control.

The light will go out when the cruise control is turned off. See *Cruise Control on page 3-10* for more information.

Highbeam On Light

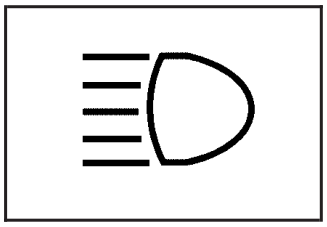

This light will come on when the high-beam headlamps are in use.

See *Headlamp High/Low-Beam Changer on page 3-8*.

Service Vehicle Soon Light

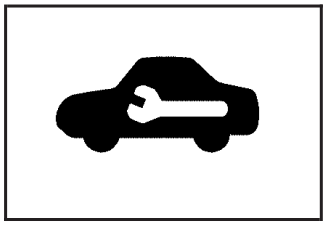

This light will come on and a chime will sound if it detects a problem on the vehicle.

The Driver Information Center (DIC) may display a message such as Low Coolant, Power Steering, Engine Reduced Power, etc. These messages may help you determine why the service vehicle soon indicator is on. See *DIC Warnings and Messages on page 3-48*. If this happens, see your GM dealer for necessary repairs to maintain top vehicle performance.

Downloaded from www.Manualslib.com manuals search engine

Fuel Gage

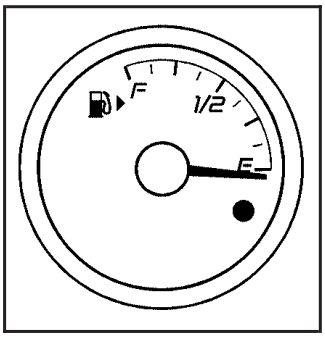

United States

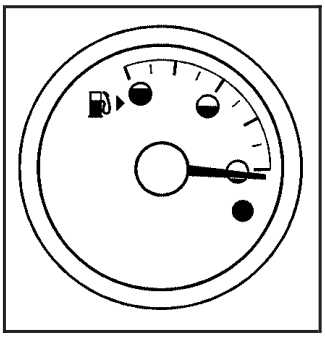

Canada

Your fuel gage tells you about how much fuel you have left, when the ignition is on. See *Low Fuel Warning Light on page 3-45* for more information.

Low Fuel Warning Light

This light, on the fuel gage, comes on when the fuel tank is low on fuel. To turn if off, add fuel to the fuel tank.

Driver Information Center (DIC)

The Driver Information Center (DIC) provides the following:

- A way to personalize your vehicle
- Trip information
- Warning messages

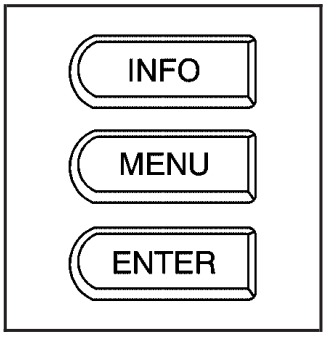

United States

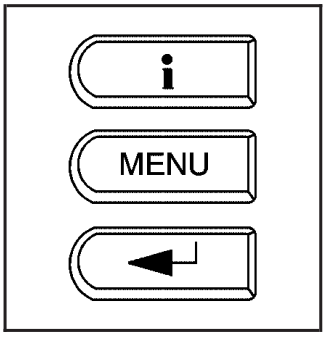

Canada

The buttons used to activate the DIC are located on the left side of the vehicle's audio system.

INFO/i (Information): Press this button to scroll through the vehicle information mode displays.

MENU: Press this button to enter and scroll through the menu mode.

Downloaded from www.Manualslib.com manuals search engine

ENTER/◄┘ (Enter): Press this button to select a menu option or to acknowledge a warning message.

The DIC messages will be read through your audio system display.

DIC Operation and Displays

The DIC comes on when the ignition is on. If your vehicle has the uplevel audio system, the time and outside temperature will be shown on the first line of the display and the DIC information will be shown on the second line of the display.

The DIC has different modes which can be accessed by pressing the DIC buttons. The button functions are detailed in the following.

Information Mode

INFO/i (Information): Press this button to scroll through the vehicle information mode displays in the following order:

- TRIP A
- TRIP B
- FUEL RANGE (Fuel Range Until Empty)
- ECON (Average Fuel Economy)
- AV SPEED (Average Vehicle Speed)
- OIL LIFE (Engine Oil Life System)

TRIP A or TRIP B: Press the information button until TRIP A or TRIP B is displayed. This shows the current distance traveled since the last reset for each trip odometer in either miles or kilometers. Both odometers can be used at the same time. Each trip odometer can be reset to zero separately by pressing and holding the enter button for a few seconds while the desired trip odometer is displayed.

FUEL RANGE: Press the information button until FUEL RANGE is displayed. This shows the remaining distance you can drive without refueling. It is based on fuel economy and the fuel remaining in the tank.

The fuel economy data used to determine fuel range is an average of recent driving conditions. As your driving conditions change, this data is gradually updated. Fuel range cannot be reset.

ECON (Economy): Press the information button until ECON is displayed. Average fuel economy is how many miles per gallon or liters per 100 kilometers your vehicle is getting based on current and past driving conditions.

Press and hold the enter button while ECON is displayed to reset the average fuel economy. Average fuel economy will then be calculated starting from that point. If the average fuel economy is not reset, it will be continually updated each time you drive.

Downloaded from www.Manualslib.com manuals search engine

AV (Average) SPEED: Press the information button until AV SPEED is displayed. This shows the vehicle's average speed in miles per hour or kilometers per hour.

Press and hold the enter button while AV SPEED is displayed to reset the average vehicle speed.

OIL LIFE: Press the information button until OIL LIFE is displayed. The engine oil life system shows an estimate of the oil's remaining useful life. It will show 100% when the system is reset after an oil change. It will alert you to change your oil on a schedule consistent with your driving conditions.

Always reset the engine oil life system after an oil change. See "OIL LIFE RESET" under *DIC Vehicle Personalization on page 3-52* and *Engine Oil Life System on page 5-20*.

In addition to the engine oil life system monitoring the oil life, additional maintenance is recommended in the Maintenance Schedule in this manual. See *Scheduled Maintenance on page 6-4* and *Engine Oil on page 5-17*.

Personalization

MENU: Press this button while the vehicle is in ON to scroll through each of the personalization options in the following order. If the vehicle is moving faster than 2 mph (3 km/h), the personalization menu options are not available, except for the UNITS option. All of the personalization options may not be available on your vehicle. Only the options available will be displayed on your DIC.

- Units Selection (English/Metric)
- Oil Life Reset
- Remote Start Capability
- Horn Chirp During Remote Keyless Entry Locking
- Horn Chirp During Remote Keyless Entry Unlocking
- Exterior Light Flash During Remote Keyless Entry Locking or Unlocking
- Delayed Locking
- Automatic Vehicle Unlocking: Specific Doors
- Automatic Vehicle Unlocking: When Key is Off or When Shift To Park
- Exterior Perimeter Lighting During Remote Keyless Entry Unlock
- Select Language: (English, French, Spanish or German)

Downloaded from www.Manualslib.com manuals search engine

When the desired option is reached, press the enter button to toggle between the modes of that option. To make a selection, press the MENU button again.

If no selection is made within 10 seconds, the display will revert back to the previous information displayed.

The MENU mode is exited when the information button is pressed, a 10 second time period has elapsed, the ignition is turned to OFF, or the end of the MENU list is reached.

See *DIC Vehicle Personalization on page 3-52* for more information on the personalization options.

Enter

ENTER/◄┘ (Enter): Press this button to reset certain functions and to turn off or acknowledge messages on the DIC display. This button also toggles through the options available in each personalization menu.

DIC Warnings and Messages

These messages will appear if there is a problem detected in one of your vehicle's systems.

Any message will clear when the vehicle's condition is no longer present. To acknowledge a message and clear it from the display, press any of the three DIC buttons. The warning message will come back on the next time the vehicle is turned off and back on if the condition is still present. With most messages, a warning chime will sound when the message is displayed. Your vehicle may have other warning messages.

AUTO (Automatic) LIGHTS OFF: This message will display if the automatic headlamp system is disabled with the headlamp switch.

AUTO (Automatic) LIGHTS ON: This message will display if the automatic headlamp system is enabled with the headlamp switch.

BRAKE FLUID: This message will display to inform the driver that the brake fluid level is low while the ignition is in ON. Have the brake system serviced by your GM dealer as soon as possible.

Downloaded from www.Manualslib.com manuals search engine

CHANGE OIL SOON: This message will display when the life of the engine oil has expired and it should be changed.

When you acknowledge the Change Engine Oil message by clearing it from the display, you still must reset the engine oil life system separately. See *Engine Oil Life System on page 5-20*, *Engine Oil on page 5-17*, and *Scheduled Maintenance on page 6-4* for more information.

CHECK CARGO TOP: If your vehicle has a retractable hardtop, this message will display if the cargo divider is not in place when operating the retractable hardtop. Open the trunk and make sure the cargo divider is secure and no objects are on the divider. See *Trunk on page 2-14*, *Lowering the Retractable Hardtop on page 2-49*, and *Raising the Retractable Hardtop on page 2-51* for more information.

CHECK GAS CAP: This message will display if the gas cap has not been fully tightened. You should recheck your gas cap to ensure that it is on properly. A few driving trips with the cap properly installed should turn the message off.

DOOR AJAR: This message will display if one or more of the vehicle's doors are not closed properly. When this message displays, you should make sure that the door is closed completely.

ENGINE DISABLED: This message will display if the starting of the engine is disabled. Have your vehicle serviced immediately by your GM dealer.

ENG (Engine) PWR (Power) REDUCED: This message will display to inform you that the vehicle has reduced engine power to avoid damaging the engine.

ICE POSSIBLE: This message will display when the outside air temperature is cold enough to create icy road conditions.

KEY FOB BATT (Battery) LOW: This message will display if the remote keyless entry transmitter battery is low. You should replace the battery in the transmitter. See "Battery Replacement" under *Remote Keyless Entry System Operation on page 2-5*.

LOW COOLANT: This message will display when there is a low level of engine coolant. Have the cooling system serviced by your GM dealer as soon as possible.

LOW FUEL: This message will display when your vehicle is low on fuel. You should refill the fuel tank as soon as possible. You will also see a low fuel warning light on the instrument panel cluster. See *Low Fuel Warning Light on page 3-45*, *Fuel on page 5-5*, and *Filling the Tank on page 5-8*.

Downloaded from www.Manualslib.com manuals search engine

LOW OIL LEVEL: This message may display on some vehicles. For correct operation of the low oil sensing system, your vehicle should be on a level surface. A false LOW OIL LEVEL message may appear if the vehicle is parked on a grade. The oil level sensing system does not check for actual oil level if the engine has been off for a short period of time, and the oil level is never checked while the engine is running. If the LOW OIL LEVEL message appears, and your vehicle has been parked on level ground with the engine off for at least 30 minutes, the oil level should be checked by observing the oil dipstick. Prior to checking the oil level, be sure the engine has been off for a few minutes and your vehicle is on a level surface. Then check the dipstick and add oil if necessary. See *Engine Oil on page 5-17*.

LOW WASHER FLUID: This message will display when your vehicle is low on windshield washer fluid. You should refill the windshield washer fluid reservoir as soon as possible. See “Adding Washer Fluid” under *Windshield Washer Fluid on page 5-38*.

PARKING BRAKE: This message will display if the parking brake is left engaged and you try to drive away. See *Parking Brake on page 2-33* for more information.

POWER STEERING: This message will display if a problem has been detected with the electric power steering, if equipped. Have your vehicle serviced immediately by your GM dealer.

SERVICE AIR BAG: There is a problem with the airbag system when this message appears. Have your vehicle serviced immediately by your GM dealer.

STABIL (StabiliTrak®) NOT READY: When you first start your vehicle and drive away, especially during cold winter weather, this message may display. This is normal. The StabiliTrak® performance is affected until this message automatically clears from the DIC display. If you acknowledge and clear this message by pressing one of the DIC buttons, the StabiliTrak® system will not be ready. The system will only be ready when this message clears from the DIC display on its own. See *StabiliTrak® System on page 4-12* for more information.

TOP FAILED: If your vehicle has a retractable hardtop, this message will display after five unsuccessful attempts at retractable hardtop operation. See your GM dealer for service. See *Lowering the Retractable Hardtop on page 2-49* and *Raising the Retractable Hardtop on page 2-51* for more information.

Top Inop (Inoperative) – Trunk: If your vehicle has a retractable hardtop, this message will display if the trunk lid is not completely closed when operating the retractable hardtop. Make sure that the trunk lid is closed when operating the retractable hardtop. See *Trunk on page 2-14*, *Lowering the Retractable Hardtop on page 2-49*, and *Raising the Retractable Hardtop on page 2-51* for more information.

Downloaded from www.Manualslib.com manuals search engine

TOP MOVE COMPLT (Complete): If your vehicle has a retractable hardtop, this message will display when the retractable hardtop has lowered or raised completely. See *Lowering the Retractable Hardtop on page 2-49* and *Raising the Retractable Hardtop on page 2-51* for more information.

Top Not Allowed: If your vehicle has a retractable hardtop with an automatic transaxle, this message will display if the retractable hardtop button is pressed while the vehicle is not in PARK (P). Make sure that the vehicle is in PARK (P) when operating the retractable hardtop. See *Lowering the Retractable Hardtop on page 2-49* and *Raising the Retractable Hardtop on page 2-51* for more information.

If your vehicle has a retractable hardtop with a manual transaxle, this message will display if the retractable hardtop button is pressed while the parking brake is not set and/or the vehicle's speed is greater than 2 mph (3 km/h). Make sure that the parking brake is set and the vehicle's speed is lowered or the vehicle is stopped when operating the retractable hardtop. See *Lowering the Retractable Hardtop on page 2-49* and *Raising the Retractable Hardtop on page 2-51* for more information.

TOP NOT SECURE: If your vehicle has a retractable hardtop, this message will display when the retractable hardtop button is released before the top open or close operation is complete. Press and hold the retractable hardtop button to fully open or close the top. See *Lowering the Retractable Hardtop on page 2-49* and *Raising the Retractable Hardtop on page 2-51* for more information.

TOP OVER TEMP (Temperature): If your vehicle has a retractable hardtop, this message will display when the retractable hardtop button is pressed and the hardtop pump motor temperature is too hot. Wait for the hardtop pump motor to cool down before using the retractable hardtop. See *Lowering the Retractable Hardtop on page 2-49* and *Raising the Retractable Hardtop on page 2-51* for more information.

TOP TOO COLD: If your vehicle has a retractable hardtop, this message will display when the retractable hardtop button is pressed and the hardtop pump motor temperature is too cold. Wait for the hardtop pump motor to warm up before using the retractable hardtop. See *Lowering the Retractable Hardtop on page 2-49* and *Raising the Retractable Hardtop on page 2-51* for more information.

TRUNK AJAR: This message will display when the trunk lid of your vehicle is not closed completely. You should make sure that the trunk lid is closed completely. See *Trunk on page 2-14* for more information.

Downloaded from www.Manualslib.com manuals search engine

DIC Vehicle Personalization

The following personalization options may appear on your vehicle's audio display by pressing the MENU button:

UNITS: When UNITS appears on the display, press the enter button to move between METRIC or ENGLISH. When you have made your choice, press the MENU button to record your selection. The initial setting from the factory is English for the United States and metric for Canada.

If you choose English, all information will be displayed in English units. For example, distance in miles and fuel economy in miles per gallon is displayed.

If you choose metric, all information will be displayed in metric units. For example, distance in kilometers and fuel economy in liters per 100 kilometers is displayed.

The unit measurement will also change the trip odometer, temperature, and average fuel economy displays.

OIL LIFE RESET: When this option is displayed, you can reset the engine oil life system. To reset the system, see *Engine Oil Life System on page 5-20*.

REMOTE START: The remote start option, if equipped, can be enabled or disabled. When REMOTE START appears on the display, press the enter button to move between OFF and ON. When you have made your choice, press the MENU button to record your selection. The initial setting from the factory is ON.

LOCK HORN: If your vehicle has remote keyless entry, this option which allows the vehicle's horn to chirp every time the lock button on the remote keyless entry transmitter is pressed, can be enabled or disabled. When LOCK HORN appears on the display, press the enter button to move between ON and OFF. When you have made your choice, press the MENU button to record your selection. The initial setting from the factory is OFF.

UNLOCK HORN: If your vehicle has remote keyless entry, this option which allows the vehicle's horn to chirp every time the unlock button on the remote keyless entry transmitter is pressed, can be enabled or disabled. When UNLOCK HORN appears on the display, press the enter button to move between ON and OFF. When you have made your choice, press the MENU button to record your selection. The initial setting from the factory is OFF.

Downloaded from www.Manualslib.com manuals search engine

LIGHT FLASH: If your vehicle has remote keyless entry, this option which allows the vehicle's exterior perimeter lighting to flash every time the lock or unlock button on the remote keyless entry transmitter is pressed, can be enabled or disabled. When LIGHT FLASH appears on the display, press the enter button to move between OFF and ON. When you have made your choice, press the MENU button to record your selection. The initial setting from the factory is ON.

DELAY LOCK: The delayed locking option, which delays the actual locking of the vehicle, can be enabled or disabled. When DELAY LOCK appears on the display, press the enter button to move between OFF and ON. When you have made your choice, press the MENU button to record your selection. The initial setting from the factory is ON.

AUTO UNLK (Unlock): The automatic door unlocking option, which allows the vehicle to automatically unlock certain doors can be enabled or disabled. When AUTO UNLK appears on the display, press the enter button to move between ALL, DRIVER or NONE. When you have made your choice, press and the MENU button to record your selection. The initial setting from the factory is ALL.

If you have a manual transaxle vehicle, the door(s) will automatically unlock when the ignition is turned off.

If you have an automatic transaxle vehicle, you can select when the automatic unlocking will occur. See "UNLK (Unlock) (Automatic Transaxle Only)" following.

See *Programmable Automatic Door Unlock on page 2-13* for more information.

UNLK (Unlock) (Automatic Transaxle Only): This screen displays only if your vehicle has an automatic transaxle and DRIVER or ALL is selected for the AUTO UNLK option. This option determines when the automatic door unlocking will occur, when either the key is turned to OFF or the vehicle is shifted into PARK (P). When UNLK appears on the display, press the enter button to move between KEY OFF and SHIFT TO P (Park). When you have made your choice, press the MENU button to record your selection. The initial setting from the factory is SHIFT TO P (Park). See *Programmable Automatic Door Unlock on page 2-13* for more information.

Downloaded from www.Manualslib.com manuals search engine

EXT (Exterior) LIGHTS: If your vehicle has remote keyless entry, this option which allows the vehicle's exterior perimeter lighting to turn on each time the unlock button on the remote keyless entry transmitter is pressed, can be enabled or disabled. When EXT LIGHTS appears on the display, press the enter button to move between ON and OFF. When you have made your choice, press the MENU button to record your selection. The initial setting from the factory is ON.

LANGUAGE: To select your choice of language, press the enter button to move between the optional languages.

The languages are ENGLISH, FRENCH, SPANISH, and GERMAN.

Choosing a language will display all of the information on the DIC in the desired language.

When you have made your choice, press the MENU button for at least one second to record your selection. The initial setting from the factory is ENGLISH.

Audio System(s)

Driving without distraction is a necessity for a safer driving experience. See *Defensive Driving on page 4-2*. By taking a few moments to read this manual and get familiar with your vehicle's audio system, you can use it with less effort, as well as take advantage of its features. While your vehicle is parked, program your favorite radio stations and XM™ channels (if equipped). Set the tone and balance the way you like them. Then when driving conditions permit, you can tune to your favorite stations using the presets and steering wheel controls (if equipped).

Notice: **Before adding any sound equipment to your vehicle, such as an audio system, CD player, CB radio, mobile telephone, or two-way radio, make sure that it can be added by checking with your dealer. Also, check federal rules covering mobile radio and telephone units. If sound equipment can be added, it is very important to do it properly. Added sound equipment may interfere with the operation of your vehicle's engine, radio, or other systems, and even damage them. Your vehicle's systems may interfere with the operation of sound equipment that has been added.**

Downloaded from www.Manualslib.com manuals search engine

Figure out which audio system is in your vehicle, find out what your audio system can do, and how to operate all of its controls.

Your vehicle has a feature called Retained Accessory Power (RAP). With RAP, the audio system can be played even after the ignition is turned off. See *Retained Accessory Power (RAP) on page 2-24* for more information.

Setting the Time for Radios without Radio Data Systems (RDS)

To set the hour, press the clock button. The clock symbol will appear on the display and the hour number will flash. Then turn the ADJ knob to increase or to decrease. To set the minutes, press the clock button again. The minute numbers will flash. Then turn the ADJ knob to increase or to decrease. The time can be set with the ignition on or off.

Setting the Time for Radios with Radio Data Systems (RDS)

To set the hour, press the clock button. The clock symbol will appear on the display and the hour number will flash. Then turn the ADJ knob to increase or to decrease. To set the minutes, press the clock button again. The minute numbers will flash. Then turn the ADJ knob to increase or to decrease. The time can be set with the ignition on or off.

To synchronize the time with an FM station broadcasting Radio Data System (RDS) information, press and hold the clock button to enter the clock set mode, then press and hold the clock button for three seconds until UPDATED appears on the display. If the time is not available from the station, NO UPDATE will appear on the display.

RDS time is broadcast once a minute. After tuning to an RDS broadcast station, it may take a few minutes for the time to update.

Downloaded from www.Manualslib.com manuals search engine

Radio with CD (Base Level)

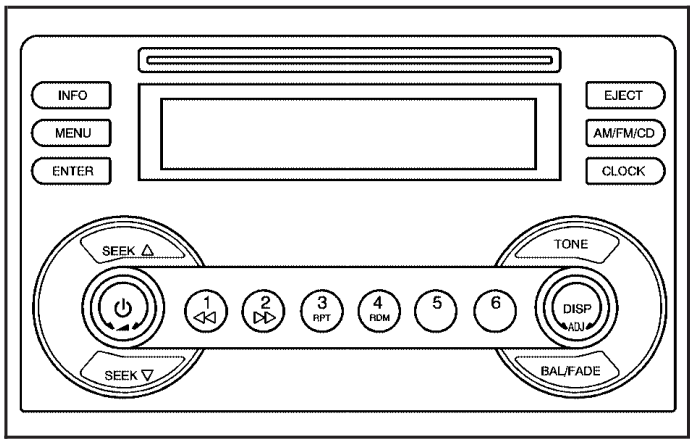

United States shown, Canada similar

Playing the Radio

⏻ **(Power):** Press this knob to turn the system on and off.

(Volume): Turn this knob to increase or to decrease the volume.

DISP (Display): Press this knob to switch the display between the time and the temperature or the radio station frequency and the temperature. When the ignition is off, press this knob to display the time.

To change the default on the display, press the DISP knob until you see the display you want, then hold the knob for two seconds. The radio will produce a beep and the selected display will now be the default.

Finding a Station

AM/FM/CD: Press this button to switch between FM1, FM2, AM, and CD. The display will show the selection.

ADJ (Adjust): Turn this knob to select radio stations.

SEEK △ / SEEK ▽: Press the SEEK up button or the SEEK down button to go to the next or to the previous station and stay there.

To scan stations, press and hold either SEEK button for two seconds until you hear a beep. The radio will go to a station, play for a few seconds, then go on to the next station. Press either SEEK button again to stop scanning.

Downloaded from www.Manualslib.com manuals search engine

To scan preset stations, press and hold either SEEK button for more than four seconds until you hear two beeps. The radio will go to the first preset station stored on the pushbuttons, play for a few seconds, then go on to the next preset station. Press either SEEK button again to stop scanning presets.

The radio will only seek and scan stations with a strong signal that are in the selected band.

Setting Preset Stations

Up to 18 stations (six FM1, six FM2, and six AM), can be programmed on the six numbered pushbuttons, by performing the following steps:

1. Turn the radio on.
2. Press AM/FM/CD to select FM1, FM2, or AM.
3. Tune in the desired station.
4. Press and hold one of the six numbered pushbuttons until you hear a beep. Whenever that numbered pushbutton is pressed, the station that was set will return.
5. Repeat the steps for each pushbutton.

Setting the Tone (Bass/Treble)

TONE / / (Bass/Treble): To adjust the bass or the treble, press and release the tone button until BASS or TREB appears on the display. Turn the ADJ knob to increase or to decrease. If a station is weak or noisy, decrease the treble.

To adjust bass or treble to the middle position, select BASS or TREB. Then press and hold the tone button for more than two seconds. You will hear a beep and the level will be adjusted to the middle position.

To adjust the tone controls to the middle position, first end out of tone by pressing another button, causing the radio to perform that function, or by waiting five seconds for the display to return to the default display. Then press and hold the tone button for more than two seconds until you hear a beep. ALL CENTERED will appear on the display.

Downloaded from www.Manualslib.com manuals search engine

Adjusting the Speakers (Balance/Fade)

BAL/FADE / (Balance/Fade): To adjust the balance between the right and the left speakers, press and release the balance and fade button until BAL appears on the display. Turn the ADJ knob to move the sound toward the right or the left speakers.

To adjust the fade between the front and the rear speakers, press and release the balance and fade button until FADE appears on the display. Then turn the ADJ knob to move the sound toward the front or the rear speakers.

To adjust the balance or the fade to the middle position, select BAL or FADE. Then press and hold the balance and fade button for more than two seconds. You will hear a beep and the level will be adjusted to the middle position.

To adjust the speaker controls to the middle position, first end out of balance and fade by pressing another button, causing the radio to perform that function, or by waiting five seconds for the display to return to the default display. Then press and hold the balance and fade button for more than two seconds until you hear a beep. ALL CENTERED will appear on the display.

Radio Messages

CALIBRATE: The audio system has been calibrated for your vehicle from the factory. If CALIBRATE appears on the display it means that the radio has not been configured properly for your vehicle and must be returned to your GM dealer for service.

LOCKED: This message is displayed when the THEFTLOCK® system has locked up. Take the vehicle to your GM dealer for service.

If any error occurs repeatedly or if an error cannot be corrected, contact your GM dealer.

Playing a CD

Insert a CD partway into the slot, label side up. The player will pull it in and the CD should begin playing. If you want to insert a CD with the ignition off, first press the eject button or the DISP knob.

As each new track starts to play, the track number will appear on the display.

If the ignition or radio is turned off with a CD in the player, it will stay in the player. When the ignition or radio is turned on, the CD will start playing, where it stopped, if it was the last selected audio source.

Downloaded from www.Manualslib.com manuals search engine

The CD player can play the smaller 3 inch (8 cm) single CDs with an adapter ring. Full-size CDs and the smaller CDs are loaded in the same manner.

If playing a CD-R the sound quality may be reduced due to CD-R quality, the method of recording, the quality of the music that has been recorded, and the way the CD-R has been handled. There may be an increase in skipping, difficulty in finding tracks, and/or difficulty in loading and ejecting. If these problems occur try a known good CD.

Do not add any label to a CD, it could get caught in the CD player.

Notice: **If you add any label to a CD, insert more than one CD into the slot at a time, or attempt to play scratched or damaged CDs, you could damage the CD player. When using the CD player, use only CDs in good condition without any label, load one CD at a time, and keep the CD player and the loading slot free of foreign materials, liquids, and debris.**

If an error appears on the display, see “CD Messages” later in this section.

1 ◁◁ (Reverse): Press and hold this pushbutton to reverse quickly within a track. You will hear sound at a reduced volume. Release this pushbutton to play the passage. The elapsed time of the track will appear on the display.

2 ▷▷ (Fast Forward): Press and hold this pushbutton to advance quickly within a track. You will hear sound at a reduced volume. Release this pushbutton to play the passage. The elapsed time of the track will appear on the display.

3 RPT (Repeat): Press this pushbutton once to hear a track over again. REPEAT ON and RPT will appear on the display. The current track will continue to repeat. Press RPT again to turn off repeat play. REPEAT OFF will appear on the display and RPT will disappear from the display.

4 RDM (Random): Press this pushbutton to hear the tracks in random, rather than sequential, order. T#, RANDOM, and RDM will appear on the display. Press RDM again to turn off random play. RANDOM OFF will appear on the display and RDM will disappear from the display.

SEEK △: Press this button to go to the next track. The track number will appear on the display. If this button is pressed more than once, the player will continue moving forward through the CD.

If this button is held for more than two seconds, the CD will enter CD scan mode and the CD will play the first 10 seconds of each track. Press this button again to stop scanning.

Downloaded from www.Manualslib.com manuals search engine

SEEK ▽: Press this button to go to the start of the current track if more than eight seconds have played. The track number will appear on the display. If this button is pressed more than once, the player will continue moving backward through the CD.

If this button is held for more than two seconds, the CD will enter CD scan mode and the CD will play the first 10 seconds of each track. Press this button again to stop scanning.

DISP (Display): Press this knob to see the current track number, time, and temperature or the track number, the elapsed time of the track, and the temperature.

To change the default on the display, press this knob until you see the display you want, then hold the knob for two seconds. You will hear a beep and the selected display will now be the default.

AM/FM/CD: Press this button when listening to the radio to play a CD.

EJECT / ⏏ (Eject): Press this button to eject a CD. Eject may be activated with either the ignition or radio off. CDs may be loaded with the ignition and radio off if this button is pressed first.

CD Messages

If the CD comes out, it could be for one of the following reasons:

- It is very hot. When the temperature returns to normal, the CD should play.
- You are driving on a very rough road. When the road becomes smoother, the CD should play.
- The CD is dirty, scratched, wet, or upside down.
- The air is very humid. If so, wait about an hour and try again.
- There may have been a problem while burning the CD.
- The label may be caught in the CD player.

If the CD is not playing correctly, for any other reason, try a known good CD.

If any error occurs repeatedly or if an error cannot be corrected, contact your GM dealer. If the radio displays an error message, write it down and provide it to your GM dealer when reporting the problem.

Downloaded from www.Manualslib.com manuals search engine

Radio with CD (Up Level)

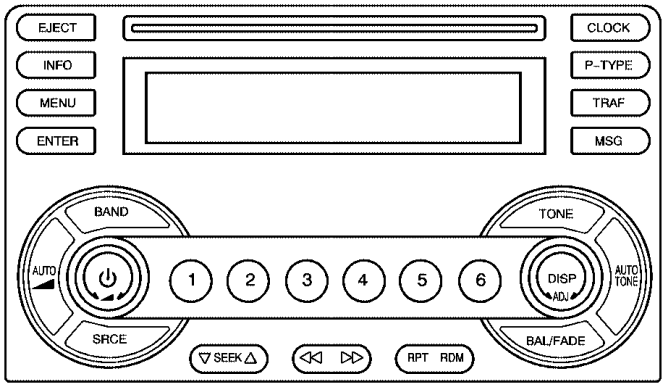

United States shown, Canada similar

If your vehicle has the Monsoon audio system, included are eight speakers and an eight channel amplifier. The radio will display MONSOON when the radio or the ignition is turned on. See your GM dealer for details.

Radio Data System (RDS)

The audio system has a Radio Data System (RDS). RDS features are available for use only on FM stations that broadcast RDS information.

With RDS, the radio can do the following:

- Seek to stations broadcasting the selected type of programming
- Receive announcements concerning local and national emergencies
- Display messages from radio stations
- Seek to stations with traffic announcements

This system relies upon receiving specific information from these stations and will only work when the information is available. In rare cases, a radio station may broadcast incorrect information that will cause the radio features to work improperly. If this happens, contact the radio station.

While the radio is tuned to an RDS station, the station name or call letters will appear on the display instead of the frequency. RDS stations may also provide the time of day, a program type (PTY) for current programming, and the name of the program being broadcast.

Downloaded from www.Manualslib.com manuals search engine

XM™ Satellite Radio Service

XM™ is a satellite radio service that is based in the 48 contiguous United States and in Canada (if available). XM™ offers over 100 coast-to-coast channels including music, news, sports, talk, and children's programming. XM™ provides digital quality audio and text information that includes song title and artist name. A service fee is required in order to receive the XM™ service. For more information, contact XM™ at www.xmradio.com or call 1-800-852-XMXM (9696).

Playing the Radio

⏻ **(Power):** Press this knob to turn the system on and off.

(Volume): Turn this knob to increase or to decrease the volume.

DISP (Display): Press this knob to switch the display between the time and the temperature or the radio station frequency and the temperature. When the ignition is off, press this knob to display the time.

For RDS, press this knob to change what appears on the display while using RDS. The display options are station name, RDS station frequency, PTY, and the name of the program (if available).

For XM™ (if equipped), press this knob while in XM mode to retrieve four different categories of information related to the current song or channel: Artist, Song Title, Category or PTY, Channel Number/Channel Name.

To change the default on the display, press the DISP knob until you see the display you want, then hold the knob for two seconds. The radio will produce a beep and the selected display will now be the default.

AUTO (Automatic Volume): With automatic volume, the audio system adjusts automatically to make up for road and wind noise as you drive.

Set the volume at the desired level. Press this button to select LOW, MEDIUM, or HIGH. AUTO VOL LOW, AUTO VOL MEDIUM, or AUTO VOL HIGH will appear on the display. Each higher setting will allow for more volume compensation at faster vehicle speeds. Then as you drive, automatic volume increases the volume, as necessary, to overcome noise at any speed. The volume level should always sound the same to you as you drive. AUTO VOL NONE will appear on the display if the radio cannot determine the vehicle speed or if the engine is not running. To turn automatic volume off, press this button until AUTO VOL OFF appears on the display.

Downloaded from www.Manualslib.com manuals search engine

Finding a Station

BAND: Press this button to switch between FM1, FM2, AM, or XM1 or XM2 (if equipped). The display will show the selection.

ADJ (Adjust): Turn this knob to select radio stations.

▽ **SEEK** △**:** Press the down or up arrow to go to the next or to the previous station and stay there.

To scan stations, press and hold either arrow for two seconds until you hear a beep. The radio will go to a station, play for a few seconds, then go on to the next station. Press either arrow again to stop scanning.

To scan preset stations, press and hold either arrow for more than four seconds until you hear two beeps. The radio will go to the first preset station stored on the pushbuttons, play for a few seconds, then go on to the next preset station. Press either arrow again to stop scanning presets.

The radio will only seek and scan stations with a strong signal that are in the selected band.

Setting Preset Stations

Up to 30 stations (six FM1, six FM2, and six AM, six XM1 and six XM2 (if equipped)), can be programmed on the six numbered pushbuttons, by performing the following steps:

1. Turn the radio on.
2. Press BAND to select FM1, FM2, AM, or XM1 or XM2.
3. Tune in the desired station.
4. Press AUTO TONE or AUTO EQ to select the equalization.
5. Press and hold one of the six numbered pushbuttons until you hear a beep. Whenever that numbered pushbutton is pressed, the station that was set will return and the equalization that was selected will be stored for that pushbutton.
6. Repeat the steps for each pushbutton.

Downloaded from www.Manualslib.com manuals search engine

Setting the Tone (Bass/Midrange/Treble)

TONE /𝄞/𝅘𝅥𝅮: (Bass/Treble): Press and release this button until BASS, MID, or TREB appears on the display. Turn the ADJ knob to increase or to decrease. The display will show the bass, midrange, or treble level. If a station is weak or noisy, decrease the treble.

To adjust bass, midrange, or treble to the middle position, select BASS, MID, or TREB. Then press and hold the tone button for more than two seconds. You will hear one beep and the tone control will be adjusted to the middle position.

To adjust all tone controls to the middle position, press and hold the tone button when no tone control is displayed. ALL CENTERED will appear on the display and you will hear a beep. The bass, midrange, and treble will be adjusted to the middle position.

AUTO TONE/AUTO EQ (Automatic Equalization): Press this button to select customized equalization settings designed for country, jazz, talk, pop, rock, and classical.

To return to the manual mode, press the AUTO TONE or AUTO EQ button until CUSTOM appears on the display. You can also manually adjust the bass, midrange, and treble using the tone button.

Adjusting the Speakers (Balance/Fade)

BAL/FADE / ◣◢ ◪ (Balance/Fade): To adjust the balance between the right and the left speakers, push and release the balance and fade button until BAL appears on the display. Turn the ADJ knob to move the sound toward the right or the left speakers.

To adjust the fade between the front and the rear speakers, push and release the balance and fade button until FADE appears on the display. Turn the ADJ knob to move the sound toward the front or the rear speakers.

To adjust balance or fade to the middle position, select BAL or FADE. Then press and hold the balance and fade button for more than two seconds. You will hear one beep and the speaker control will be adjusted to the middle position.

To adjust both speaker controls to the middle position, push and hold the tone button when no speaker control is displayed. ALL CENTERED will appear on the display and you will hear one beep. The balance and fade will be adjusted to the middle position.

Downloaded from www.Manualslib.com manuals search engine

Finding a Program Type (PTY) Station (RDS and XM™)

To select and find a desired PTY perform the following:

1. Press the P-TYPE button to activate program type select mode. PTY for FM or PTYPE for XM and a program type will appear on the display.
2. Turn the ADJ knob to select a PTY.
3. Once the desired PTY is displayed, press the SEEK up arrow to select the PTY and to take you to the PTY's first station.
4. To go to another station within that PTY press the SEEK up arrow again. If the radio cannot find the desired PTY, NONE FOUND will appear on the display and the radio will return to the last station you were listening to.

   After 15 seconds of inactivity or if the P-TYPE button is pressed again, the radio will exit program type select mode.

BAND (Alternate Frequency): Alternate frequency allows the radio to switch to a stronger station with the same program type. To turn alternate frequency on, press and hold BAND for two seconds. FM ALT FREQ ON and AF will appear on the display. The radio may switch to stations with a stronger frequency.

To turn alternate frequency off, press and hold BAND again for two seconds. FM ALT FREQ OFF will appear on the display and AF will disappear from the display. The radio will not switch to other stations.

This function does not apply for XM™ Satellite Radio Service.

RDS Messages

ALERT!: Alert warns of local or national emergencies. When an alert announcement comes on the current radio station, ALERT! will appear on the display. You will hear the announcement, even if the volume is low or a CD is playing. If a CD is playing, play will stop during the announcement. Alert announcements cannot be turned off.

ALERT! will not be affected by tests of the emergency broadcast system. This feature is not supported by all RDS stations.

MSG (Message): If the current station has a message, MSG will appear on the display. Press this button to see the message. The message may display the artist, song title, call in phone numbers, etc.

Downloaded from www.Manualslib.com manuals search engine

If the entire message is not displayed, parts of the message will appear every three seconds. To scroll through the message, press and release the MSG button. A new group of words will appear on the display after every press of the button. Once the complete message has been displayed, MSG will disappear from the display until another new message is received. The last message can be displayed by pressing the MSG button. You can view the last message until a new message is received or a different station is tuned to.

When a message is not available from a station, NO MESSAGE will appear on the display.

TRAF (Traffic): If TRAFFIC appears on the display, the tuned station broadcasts traffic announcements and when a traffic announcement comes on the tuned radio station you will hear it.

If the station does not broadcast traffic announcements, press the TRAF button and the radio will seek to a station that does. When a station that broadcasts traffic announcements is found, the radio will stop seeking and TRAF and brackets will appear on the display. If no station is found that broadcasts traffic announcements, NO TRAFFIC INFO will appear on the display.

If TRAF is on the display, press the TRAF button to turn off the traffic announcements.

The radio will play the traffic announcement even if the volume is low. The radio will interrupt the play of a CD if the last tuned station broadcasts traffic announcements.

This function does not apply to XM™ Satellite Radio Service.

Radio Messages

CALIBRATE: The audio system has been calibrated for your vehicle from the factory. If CALIBRATE appears on the display, it means that the radio has not been configured properly for your vehicle and it must be returned to your GM dealer for service.

LOCKED: This message is displayed when the THEFTLOCK® system has locked up. Take your vehicle to your GM dealer for service.

If any error occurs repeatedly or if an error cannot be corrected, contact your GM dealer.

Downloaded from www.Manualslib.com manuals search engine

XM™ Radio Messages

Radio Display Message	Condition	Action Required
XL (Explicit Language Channels)	XL on the radio display, after the channel name, indicates content with explicit language.	These channels, or any others, can be blocked at a customer's request, by calling 1-800-852-XMXM (9696).
Updating	Updating encryption code	The encryption code in the receiver is being updated, and no action is required. This process should take no longer than 30 seconds.
No Signal	Loss of signal	The system is functioning correctly, but the vehicle is in a location that is blocking the XM signal. When the vehicle is moved into an open area, the signal should return.
Loading XM	Acquiring channel audio (after 4 second delay)	The audio system is acquiring and processing audio and text data. No action is needed. This message should disappear shortly.
CH Off Air	Channel not in service	This channel is not currently in service. Tune to another channel.
CH Unavail	Channel no longer available	This previously assigned channel is no longer assigned. Tune to another station. If this station was one of the presets, choose another station for that preset button.
No Info	Artist Name/Feature not available	No artist information is available at this time on this channel. The system is working properly.
No Info	Song/Program Title not available	No song title information is available at this time on this channel. The system is working properly.

Downloaded from www.Manualslib.com manuals search engine

XM™ Radio Messages (cont'd)

Radio Display Message	Condition	Action Required
No Info	Category Name not available	No category information is available at this time on this channel. The system is working properly.
No Info	No Text/Informational message available	No text or informational messages are available at this time on this channel. The system is working properly.
Not Found	No channel available for the chosen category	There are no channels available for the selected category. The system is working properly.
XM Locked	Theft lock active	The XM receiver in your vehicle may have previously been in another vehicle. For security purposes, XM receivers cannot be swapped between vehicles. If this message is received after having your vehicle serviced, check with your GM dealer.
Radio ID	Radio ID label (channel 0)	If tuned to channel 0, this message will alternate with the XM Radio eight digit radio ID label. This label is needed to activate the service.
Unknown	Radio ID not known (should only be if hardware failure)	If this message is received when tuned to channel 0, there may be a receiver fault. Consult with your GM dealer.
Chk XMRcvr	Hardware failure in the receiver module	If this message does not clear within a short period of time, the receiver may have a fault. Consult with your GM dealer.
CHECK DAB	XM not available	If this message does not clear within a short period of time, the receiver may have a fault. Consult with your GM dealer.

Downloaded from www.Manualslib.com manuals search engine

Playing a CD

Insert a CD partway into the slot, label side up. The player will pull it in and the CD should begin playing. If you want to insert a CD with the ignition off, first press the eject button or the DISP knob.

As each new track starts to play, the track number will appear on the display.

If the ignition or radio is turned off with a CD in the player, it will stay in the player. When the ignition or radio is turned on, the CD will start playing, where it stopped, if it was the last selected audio source.

The CD player can play the smaller 3 inch (8 cm) single CDs with an adapter ring. Full-size CDs and the smaller CDs are loaded in the same manner.

If playing a CD-R the sound quality may be reduced due to CD-R quality, the method of recording, the quality of the music that has been recorded, and the way the CD-R has been handled. There may be an increase in skipping, difficulty in finding tracks, and/or difficulty in loading and ejecting. If these problems occur try a known good CD.

Do not add any label to a CD, it could get caught in the CD player.

Notice: **If you add any label to a CD, insert more than one CD into the slot at a time, or attempt to play scratched or damaged CDs, you could damage the CD player. When using the CD player, use only CDs in good condition without any label, load one CD at a time, and keep the CD player and the loading slot free of foreign materials, liquids, and debris.**

If an error appears on the display, see “CD Messages” later in this section.

◁◁ **(Reverse):** Press and hold this pushbutton to reverse quickly within a track. You will hear sound at a reduced volume. Release the button to play the passage. The elapsed time of the track will appear on the display.

▷▷ **(Fast Forward):** Press and hold this pushbutton to advance quickly within a track. You will hear sound at a reduced volume. Release the button to play the passage. The elapsed time of the track will appear on the display.

RPT (Repeat): Press this button once to hear a track over again. REPEAT ON and RPT will appear on the display. The current track will continue to repeat. Press RPT again to turn off repeat play. REPEAT OFF will appear on the display and RPT will disappear from the display.

Downloaded from www.Manualslib.com manuals search engine

RDM (Random): Press this button to hear the tracks in random, rather than sequential, order. T#, RANDOM, and RDM will appear on the display. T and the track number will appear on the display when each track starts to play. Press RDM again to turn off random play. RANDOM OFF will appear on the display and RDM will disappear from the display.

▽ SEEK △: Press the down arrow to go to the start of the current track if more than eight seconds have played. If this arrow is pressed more than once, the player will continue moving backward through the CD.

Press the up arrow to go to the start of the next track. If this arrow is pressed more than once, the player will continue moving forward through the CD.

If either arrow is held or pressed for more than two seconds, the CD will enter CD scan mode and the CD will play the first 10 seconds of each track. Press either arrow again to stop scanning.

DISP (Display): Press this knob to see how long the current track has been playing. T, the track number, and the elapsed time of the track will appear on the display. To change the default on the display, time or elapsed time, press the knob until you see the display you want, then hold the knob for two seconds. The radio will produce one beep and the selected display will now be the default. Pressing this button will also display text on commercially recorded CDs (if available).

AUTO TONE/AUTO EQ (Automatic Equalization): Press this button to select the desired equalization setting while playing a CD. The equalization will be automatically recalled whenever a CD is played. For more information, see AUTO TONE/AUTO EQ listed previously in this section.

BAND: Press this button to listen to the radio when a CD is playing. The inactive CD will remain safely inside the radio for future listening.

SRCE (Source): Press this button to play a CD or to access a remote device (if installed) when listening to the radio.

EJECT / ⏏ (Eject): Press this button to eject a CD. Eject may be activated with either the ignition or radio off. CDs may be loaded with the ignition and radio off if this button is pressed first.

Downloaded from www.Manualslib.com manuals search engine

CD Messages

CHECK CD: If this message appears on the display and/or the CD comes out, it could be for one of the following reasons:

- It is very hot. When the temperature returns to normal, the CD should play.
- You are driving on a very rough road. When the road becomes smoother, the CD should play.
- The CD is dirty, scratched, wet, or upside down.
- The air is very humid. If so, wait about an hour and try again.
- There may have been a problem while burning the CD.
- The label may be caught in the CD player.

If the CD is not playing correctly, for any other reason, try a known good CD.

If any error occurs repeatedly or if an error cannot be corrected, contact your GM dealer. If the radio displays an error message, write it down and provide it to your GM dealer when reporting the problem.

Radio with Six-Disc CD

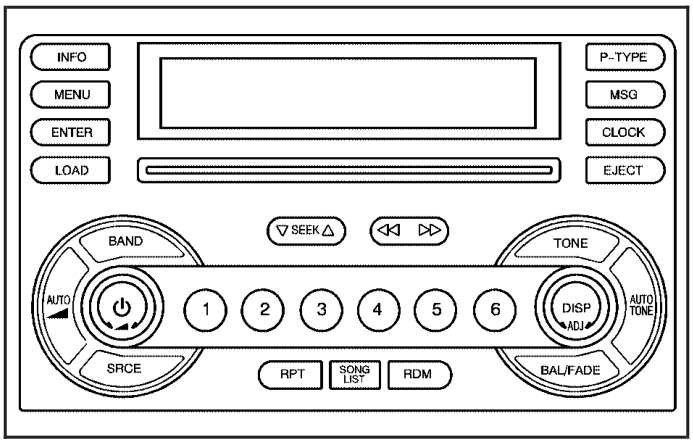

United States shown, Canada similar

If your vehicle has the Monsoon audio system, included are eight speakers and an eight channel amplifier. The radio will display MONSOON when the radio or the ignition is turned on. See your GM dealer for details.

Downloaded from www.Manualslib.com manuals search engine

Radio Data System (RDS)

The audio system has a Radio Data System (RDS). RDS features are available for use only on FM stations that broadcast RDS information.

With RDS, the radio can do the following:

- Seek to stations broadcasting the selected type of programming
- Receive announcements concerning local and national emergencies
- Display messages from radio stations
- Seek to stations with traffic announcements

This system relies upon receiving specific information from these stations and will only work when the information is available. In rare cases, a radio station may broadcast incorrect information that will cause the radio features to work improperly. If this happens, contact the radio station.

While the radio is tuned to an RDS station, the station name or call letters will appear on the display instead of the frequency. RDS stations may also provide the time of day, a program type (PTY) for current programming, and the name of the program being broadcast.

XM™ Satellite Radio Service

XM™ is a satellite radio service that is based in the 48 contiguous United States and in Canada (if available). XM™ offers over 100 coast-to-coast channels including music, news, sports, talk, and children's programming. XM™ provides digital quality audio and text information that includes song title and artist name. A service fee is required in order to receive the XM™ service. For more information, contact XM™ at www.xmradio.com or call 1-800-852-XMXM (9696).

Playing the Radio

⏻ **(Power):** Press this knob to turn the system on and off.

(Volume): Turn this knob to increase or to decrease the volume.

DISP (Display): Press this knob to switch the display between time and temperature or radio station frequency and temperature. When the ignition is off, press this knob to display the time.

For RDS, press the DISP knob to change what appears on the display while using RDS. The display options are station name, RDS station frequency, PTY, and the name of the program (if available).

Downloaded from www.Manualslib.com manuals search engine

For XM™ (if equipped), press the DISP knob while in XM mode to retrieve four different categories of information related to the current song or channel: Artist, Song Title, Category or PTY, Channel Number/Channel Name.

To change the default on the display, press the DISP knob until you see the display you want, then hold the knob for two seconds. You will hear a beep and the selected display will now be the default.

AUTO ◄ (Automatic Volume): With automatic volume, the audio system adjusts automatically to make up for road and wind noise as you drive.

Set the volume at the desired level. Press this button to select LOW, MEDIUM, or HIGH. AUTO VOL LOW, AUTO VOL MEDIUM, or AUTO VOL HIGH will appear on the display. Each higher setting will allow for more volume compensation at faster vehicle speeds. Then as you drive, automatic volume increases the volume, as necessary, to overcome noise at any speed. The volume level should always sound the same to you as you drive. AUTO VOL NONE will appear on the display if the radio cannot determine the vehicle speed or if the engine is not running. To turn automatic volume off, press this button until AUTO VOL OFF appears on the display.

Finding a Station

BAND: Press this button to switch between FM1, FM2, AM, or XM1 or XM2 (if equipped). The display will show the selection.

ADJ (Adjust): Turn this knob to select radio stations.

▽ **SEEK** △**:** Press the down or up arrow to go to the next or to the previous station and stay there.

To scan stations, press and hold either arrow for two seconds until you hear a beep. The radio will go to a station, play for a few seconds, then go on to the next station. Press either arrow again to stop scanning.

To scan preset stations, press and hold either arrow for more than four seconds until you hear two beeps. The radio will go to the first preset station stored on the pushbuttons, play for a few seconds, then go on to the next preset station. Press either arrow again to stop scanning presets.

The radio will only seek and scan stations with a strong signal that are in the selected band.

Downloaded from www.Manualslib.com manuals search engine

Setting Preset Stations

Up to 30 stations (six FM1, six FM2, and six AM, six XM1 and six XM2 (if equipped)), can be programmed on the six numbered pushbuttons, by performing the following steps:

1. Turn the radio on.
2. Press BAND to select FM1, FM2, AM, or XM1 or XM2.
3. Tune in the desired station.
4. Press AUTO TONE or AUTO EQ to select the equalization.
5. Press and hold one of the six numbered pushbuttons until you hear a beep. Whenever that numbered pushbutton is pressed, the station that was set will return and the equalization that was selected will be stored for that pushbutton.
6. Repeat the steps for each pushbutton.

Setting the Tone (Bass/Midrange/Treble)

TONE /𝄞/♪: (Bass/Treble): Press and release this button until BASS, MID, or TREB appears on the display. Turn the ADJ knob to increase or to decrease. The display will show the bass, mid, or treble level. If a station is weak or noisy, decrease the treble.

To adjust bass, midrange, or treble to the middle position, select BASS, MID, or TREB. Then press and hold the tone button for more than two seconds. The display level will be adjusted to the middle position and you will hear a beep.

To adjust all tone controls to the middle position, press and hold the tone button when no tone control is displayed. ALL CENTERED will appear on the display and you will hear a beep.

AUTO TONE/AUTO EQ (Automatic Equalization): Press this button to select customized equalization settings designed for country, jazz, talk, pop, rock, and classical.

The equalization setting last chosen will appear on the display when you first press this button. Each time you press this button, another equalization setting will appear on the display and automatic tone or automatic equalization will switch to that preset equalization settings.

To return to the manual mode, press the AUTO TONE or AUTO EQ button until CUSTOM appears on the display. Then manually adjust the bass, midrange, and treble using the tone button.

Downloaded from www.Manualslib.com manuals search engine

Adjusting the Speakers (Balance/Fade)

BAL/FADE / (Balance/Fade): To adjust the balance between the right and the left speakers, push and release the balance and fade button until BAL appears on the display. Turn the ADJ knob to move the sound toward the right or the left speakers.

To adjust the fade between the front and rear speakers, push and release the balance and fade button until FADE appears on the display. Turn the ADJ knob to move the sound toward the front or the rear speakers.

To adjust balance or fade to the middle position, select BAL or FADE. Then press and hold the balance and fade button for more than two seconds. The display level will be adjusted to the middle position and you will hear a beep.

To adjust both speaker controls to the middle position, press and hold the tone button when no speaker control is displayed. ALL CENTERED will appear on the display and you will hear a beep.

Finding a Program Type (PTY) Station (RDS and XM™)

To select and find a desired PTY perform the following:

1. Press the P-TYPE button to activate program type select mode. PTY for FM or PTYPE for XM and a program type will appear on the display.
2. Turn the ADJ knob to select a PTY.
3. Once the desired PTY is displayed, press the SEEK up arrow to select and to take you to the PTY's first station.
4. To go to another station within that PTY press the SEEK up arrow again. If the radio cannot find the desired PTY, NONE FOUND will appear on the display and the radio will return to the last station you were listening to.
5. Press P-TYPE to exit program type select mode.

   If PTY times out and is no longer on the display, go back to Step 1.

If both P-TYPE and TRAF are on, the radio will search for stations with the selected PTY and traffic announcements.

Downloaded from www.Manualslib.com manuals search engine

BAND (Alternate Frequency): Alternate frequency allows the radio to switch to a stronger station with the same program type. To turn alternate frequency on, press and hold BAND for two seconds. FM ALT FREQ ON and AF will appear on the display. The radio may switch to stations with a stronger frequency.

To turn alternate frequency off, press and hold BAND again for two seconds. FM ALT FREQ OFF will appear on the display and AF will disappear from the display. The radio will not switch to other stations.

This function does not apply for XM™ Satellite Radio Service.

RDS Messages

ALERT!: Alert warns of local or national emergencies. When an alert announcement comes on the current radio station, ALERT! will appear on the display. You will hear the announcement, even if the volume is low or a CD is playing. If a CD is playing, play will stop during the announcement. Alert announcements cannot be turned off.

ALERT! will not be affected by tests of the emergency broadcast system. This feature is not supported by all RDS stations.

MSG (Message): If the current station has a message, MSG will appear on the display. Press this button to see the message. The message may display the artist, song title, call in phone numbers, etc.

If the entire message is not displayed, parts of the message will appear every three seconds. To scroll through the message, press and release the MSG button. A new group of words will appear on the display after every press of this button. Once the complete message has been displayed, MSG will disappear from the display until another new message is received. The last message can be displayed by pressing the MSG button. You can view the last message until a new message is received or a different station is tuned to.

When a message is not available from a station, NO MESSAGE will appear on the display.

MSG (Traffic): If TRAFFIC appears on the display, the tuned station broadcasts traffic announcements and when a traffic announcement comes on the tuned radio station you will hear it.

Downloaded from www.Manualslib.com manuals search engine

If the current tuned station does not broadcast traffic announcements, press and hold this button for two seconds and the radio will seek to a station that does. When a station that broadcasts traffic announcements is found, the radio will stop seeking and TRAF and brackets will appear on the display. When a traffic announcement comes on the tuned radio station you will hear it. If no station is found that broadcasts traffic announcements, NO TRAFFIC INFO will appear on the display.

If TRAF is on the display, press and hold the MSG button for two seconds to turn off the traffic announcements.

The radio will play the traffic announcement even if the volume is low. The radio will interrupt the play of a CD if the last tuned station broadcasts traffic announcements.

This function does not apply to XM™ Satellite Radio Service.

Radio Messages

CALIBRATE: The audio system has been calibrated for your vehicle from the factory. If CALIBRATE appears on the display it means that the radio has not been configured properly for the vehicle and it must be returned to your GM dealer for service.

LOCKED: This message is displayed when the THEFTLOCK® system has locked up. Take your vehicle to your GM dealer for service.

If any error occurs repeatedly or if an error cannot be corrected, contact your GM dealer.

Downloaded from www.Manualslib.com manuals search engine

XM™ Radio Messages

Radio Display Message	Condition	Action Required
XL (Explicit Language Channels)	XL on the radio display, after the channel name, indicates content with explicit language.	These channels, or any others, can be blocked at a customer's request, by calling 1-800-852-XMXM (9696).
Updating	Updating encryption code	The encryption code in the receiver is being updated, and no action is required. This process should take no longer than 30 seconds.
No Signal	Loss of signal	The system is functioning correctly, but the vehicle is in a location that is blocking the XM signal. When the vehicle is moved into an open area, the signal should return.
Loading XM	Acquiring channel audio (after 4 second delay)	The audio system is acquiring and processing audio and text data. No action is needed. This message should disappear shortly.
CH Off Air	Channel not in service	This channel is not currently in service. Tune to another channel.
CH Unavail	Channel no longer available	This previously assigned channel is no longer assigned. Tune to another station. If this station was one of the presets, choose another station for that preset button.
No Info	Artist Name/Feature not available	No artist information is available at this time on this channel. The system is working properly.
No Info	Song/Program Title not available	No song title information is available at this time on this channel. The system is working properly.

Downloaded from www.Manualslib.com manuals search engine

XM™ Radio Messages (cont'd)

Radio Display Message	Condition	Action Required
No Info	Category Name not available	No category information is available at this time on this channel. The system is working properly.
No Info	No Text/Informational message available	No text or informational messages are available at this time on this channel. The system is working properly.
Not Found	No channel available for the chosen category	There are no channels available for the selected category. The system is working properly.
XM Locked	Theft lock active	The XM receiver in the vehicle may have previously been in another vehicle. For security purposes, XM receivers cannot be swapped between vehicles. If this message is received after having your vehicle serviced, check with your GM dealer.
Radio ID	Radio ID label (channel 0)	If tuned to channel 0, this message will alternate with the XM Radio eight digit radio ID label. This label is needed to activate the service.
Unknown	Radio ID not known (should only be if hardware failure)	If this message is received when tuned to channel 0, there may be a receiver fault. Consult with your GM dealer.
Chk XMRcvr	Hardware failure in the receiver module	If this message does not clear within a short period of time, the receiver may have a fault. Consult with your GM dealer.
CHECK DAB	XM not available	If this message does not clear within a short period of time, the receiver may have a fault. Consult with your GM dealer.

Downloaded from www.Manualslib.com manuals search engine

Playing a CD

If the ignition or radio is turned off, with a CD in the player, it will stay in the player. When the ignition or radio is turned on, the CD will start playing where it stopped, if it was the last selected audio source.

When a CD is inserted, the CD symbol will appear on the CD. As each new track starts to play, the track number will appear on the display.

The CD player can play the smaller 3 inch (8 cm) single CDs with an adapter ring. Full-size CDs and the smaller CDs are loaded in the same manner.

If playing a CD-R the sound quality may be reduced due to CD-R quality, the method of recording, the quality of the music that has been recorded, and the way the CD-R has been handled. There may be an increase in skipping, difficulty in finding tracks, and/or difficulty in loading and ejecting. If these problems occur try a known good CD.

Do not add any label to a CD, it could get caught in the CD player.

Notice: **If you add any label to a CD, insert more than one CD into the slot at a time, or attempt to play scratched or damaged CDs, you could damage the CD player. When using the CD player, use only CDs in good condition without any label, load one CD at a time, and keep the CD player and the loading slot free of foreign materials, liquids, and debris.**

If an error appears on the display, see “CD Messages” later in this section.

LOAD: Press the LOAD button to load CDs into the CD player. This CD player will hold up to six CDs.

To insert one CD, do the following:

1. Turn the ignition on.
2. Press and release the LOAD button.
3. Wait for INSERT CD to flash on the display.
4. Load a CD. Insert the CD partway into the slot, label side up. The player will pull the CD in.

Downloaded from www.Manualslib.com manuals search engine

To insert multiple CDs, do the following:

1. Turn the ignition on.
2. Press and hold the LOAD button for two seconds.

   You will hear a beep and MULTI LOAD CD, then INSERT CD and the number will appear on the display.
3. Once INSERT CD and the number appears on the display, load a CD. Insert the CD partway into the slot, label side up. The player will pull the CD in.

   Once the CD is loaded, INSERT CD and the number will appear on the display again. Once INSERT CD and the number appear on the display again, you can load another CD. The CD player takes up to six CDs. Do not try to load more than six.

To load more than one CD but less than six, complete Steps 1 through 3. When finished loading CDs, the radio will begin to play the last CD loaded.

If more than one CD has been loaded, a number for each CD will be displayed and the currently selected slot number will be underlined.

EJECT/⏏ : To eject a single CD press this button. The radio will display EJECTING CD # and the single CD symbol will flash until the CD is ready to be removed. When the CD is ready to be removed it will eject part way from the radio and the display will change to a flashing REMOVE CD # with the single CD symbol flashing until the CD is removed. If the CD is not removed within 25 seconds the radio will pull it back in.

To eject multiple CDs, press and hold the eject button until you hear a beep and EJECTING ALL CDS appears on the display with the single CD symbol flashing. The CD symbol will flash until a CD is ready to be removed. When the CD is ready to be removed it will eject part way from the radio and the display will change to a flashing REMOVE CD # with the single CD symbol flashing until the CD is removed. If the CD is not removed within 25 seconds the radio will pull it back in. After the CD is removed the radio will repeat the previous actions until all of the CDs have been removed or a CD is pulled back in.

Downloaded from www.Manualslib.com manuals search engine

Playing a Specific Loaded CD

For every CD loaded, a number will appear on the display. To play a specific CD, press the numbered pushbutton that corresponds to the CD you want to play. A small bar will appear under the CD number that is playing, and the track number will appear.

If an error appears on the display, see “CD Messages” later in this section.

◁◁ **(Reverse):** Press and hold this button to reverse quickly within a track. You will hear sound at a reduced volume. Release this button to play the passage. T#, the elapsed time, and REV will appear on the display.

▷▷ **(Fast Forward):** Press and hold this button to advance quickly within a track. You will hear sound at a reduced volume. Release the button to play the passage. T#, the elapsed time, and FWD will appear on the display.

RPT (Repeat): With repeat, one track or an entire CD can be repeated.

To use repeat, do the following:

- To repeat the track you are listening to, press and release the RPT button. REPEAT ON and RPT will appear on the display. Press RPT again to turn off repeat play. REPEAT OFF will appear on the display and RPT will disappear from the display.
- To repeat the CD you are listening to, press and hold the RPT button for more than two seconds. REPEAT ON and RPT will appear on the display. Press RPT again to turn off repeat play. REPEAT OFF will appear on the display and RPT will disappear from the display.

RDM (Random): With random, you can listen to the tracks in random, rather than sequential, order, on one CD or on all of the CDs.

Downloaded from www.Manualslib.com manuals search engine

To use random, do one of the following:

- To play the tracks on the CD you are listening to in random order, press the RDM button. RANDOM TRACKS and RDM will appear on the display. Press RDM again to turn off random play. RANDOM OFF will appear on the display and RDM will disappear from the display.
- To play the tracks on all of the CDs that are loaded, in random order, press and hold the RDM button for more than two seconds. You will hear a beep, RANDOM ALL CDS, and RDM will appear on the display. Press RDM again to turn off random play. RANDOM OFF will appear on the display and RDM will disappear from the display.

▽ **SEEK △:** Press the down arrow to go to the start of the current track, if more than eight seconds have played. Press the up arrow to go to the beginning of the next track. If either arrow is held or pressed more than once, the player will continue moving backward or forward through the CD.

To scan the current CD, press and hold either SEEK arrow for more than two seconds. The CD will go to the next track, play the first 10 seconds, then go on to the next track. Press either SEEK arrow again to stop scanning.

To scan all of the CDs loaded, press and hold either SEEK arrow for more than four seconds. The CD will go to the next CD, play the first 10 seconds of the first track, then go on to the next CD. Press either SEEK arrow again to stop scanning.

DISP (Display): Press this knob to switch between time, temperature, and the elapsed time of the track. To change the default on the display (CD#/Track#/Time, CD#/Track#/Temperature, or Track#/Elapsed Time/Temperature), press the knob until you see the display you want, then hold the knob for two seconds. The radio will produce one beep and the selected display will now be the default.

AUTO TONE/AUTO EQ (Automatic Equalization): Press this button to select the desired equalization setting while playing a CD. The equalization will be set whenever a CD is played. For more information, see “AUTO TONE” or “AUTO EQ” listed previously in this section.

BAND: Press this button to listen to the radio when a CD is playing. The inactive CD(s) will remain safely inside the radio for future listening.

SRCE (Source): Press this button to play a CD or to access the remote device, when listening to the radio.

Downloaded from www.Manualslib.com manuals search engine

Using Song List / ♩☰ Mode

The six-disc CD changer has a feature called song list. This feature is capable of saving 20 track selections.

To save tracks into the song list feature, perform the following steps:

1. Turn the radio on and load it with at least one CD. See “LOAD” listed previously in this section for more information.
2. Check to see that the CD changer is not in song list mode. S-LIST should not appear in the display. If S-LIST is present, press the SONG LIST button to turn it off.
3. Select the desired CD by pressing the numbered pushbutton and then use the SEEK left arrow to locate the track to be saved. The track will begin to play.
4. Press and hold the song list button for two or more seconds to save the track into memory. When song list is pressed, one beep will be heard immediately. After two seconds of pressing song list continuously, two beeps will sound to confirm that the track has been saved and TRACK number ADDED will appear on the display.
5. Repeat Steps 3 and 4 for saving other selections.

SONG LIST FULL will appear on the display if you try to save more than 20 selections.

To play the song list, press the song list button. One beep will be heard and SONG LIST will appear on the display. The recorded tracks will begin to play in the order that they were saved.

Seek through the song list by using the SEEK arrows. Seeking past the last saved track will return you to the first saved track.

To delete tracks from the song list, perform the following steps:

1. Turn the CD player on.
2. Press the song list button to turn song list on. SONG LIST will appear on the display.
3. Press the SEEK arrows to select the desired track to be deleted.
4. Press and hold the song list button for two seconds. When song list is pressed, one beep will be heard immediately. After two seconds of continuously pressing the song list button, two beeps will be heard to confirm that the track has been deleted and TRACK number DELETED will appear on the display.

After a track has been deleted, the remaining tracks are moved up the list. When another track is added to the song list, the track will be added to the end of the list.

Downloaded from www.Manualslib.com manuals search engine

To delete the entire song list, perform the following steps:

1. Turn the CD player on.
2. Press the song list button to turn song list on. S-LIST will appear on the display.
3. Press and hold the song list button for more than four seconds. A beep will be heard, followed by two beeps after two seconds, and a final beep will be heard after four seconds. SONG LIST EMPTY will appear on the display indicating that the song list has been deleted.

If a CD is ejected, and the song list contains saved tracks from that CD, those tracks are automatically deleted from the song list. Any tracks saved to the song list again are added to the bottom of the list.

To end song list mode, press the song list button. One beep will be heard and S-LIST will be removed from the display.

CD Messages

CHECK CD: If this message appears on the display and/or the CD comes out, it could be for one of the following reasons:

- It is very hot. When the temperature returns to normal, the CD should play.
- You are driving on a very rough road. When the road becomes smoother, the CD should play.
- The CD is dirty, scratched, wet, or upside down.
- The air is very humid. If so, wait about an hour and try again.
- There may have been a problem while burning the CD.
- The label may be caught in the CD player.

If the CD is not playing correctly, for any other reason, try a known good CD.

If any error occurs repeatedly or if an error cannot be corrected, contact your GM dealer. If the radio displays an error message, write it down and provide it to your GM dealer when reporting the problem.

Downloaded from www.Manualslib.com manuals search engine

Theft-Deterrent Feature

THEFTLOCK® is designed to discourage theft of your vehicle's radio. The feature works automatically by learning a portion of the Vehicle Identification Number (VIN). If the radio is moved to a different vehicle, it will not operate and LOCKED will appear on the display.

With THEFTLOCK® activated, the radio will not operate if stolen.

Audio Steering Wheel Controls (Three Spoke)

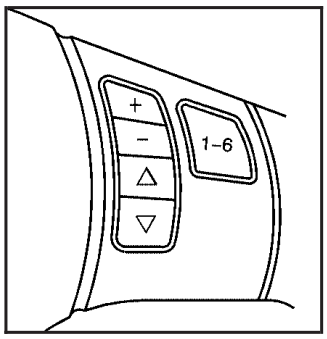

If your vehicle has this feature, some audio controls can be adjusted at the steering wheel. They include the following:

▽ △: Press the up or the down arrow to go to the next or to the previous radio station and stay there.

The radio will only seek stations with a strong signal that are in the selected band.

To scan stations, press and hold either arrow for two seconds until SCAN appears on the display and you hear a beep. The radio will go to a station, play for a few seconds, then go on to the next station. Press either arrow again to stop scanning.

When a CD is playing, press the up or the down arrow to go to the next or previous track.

To scan the current CD, press and hold either up or down arrow for more than two seconds. The CD will go to the next track, play the first 10 seconds, then go on to the next track. Press either up or down arrow again to stop scanning.

To scan all of the CDs loaded, press and hold either up or down arrow for more than four seconds. The CD will go to the next CD, play the first 10 seconds of each track, then go on to the next CD. Press either up or down arrow again to stop scanning.

+ – **(Volume):** Press the plus or minus button to increase or to decrease the volume.

1–6 (Preset Pushbuttons): Press this button to play stations that are programmed on the radio preset pushbuttons. The radio will only seek preset stations with a strong signal that are in the selected band.

When a CD is playing in the six-disc CD changer, press this button to go to the next available CD, if multiple CDs are loaded.

Downloaded from www.Manualslib.com manuals search engine

Audio Steering Wheel Controls (Four Spoke)

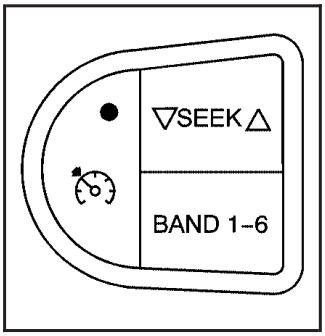

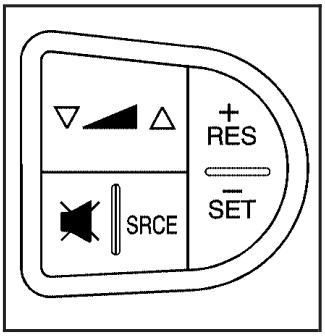

If your vehicle has this feature, some audio controls can be adjusted at the steering wheel. They include the following:

▽ **SEEK** △**:** Press the up or the down arrow to go to the next or to the previous radio station and stay there. The radio will only seek stations with a strong signal that are in the selected band.

When a CD is playing, press the up or the down arrow to go to the next or previous track.

BAND: Press this button to switch between FM1, FM2, AM, or XM1 or XM2 (if equipped).

1–6 (Preset Pushbuttons): Press this button to play stations that are programmed on the radio preset pushbuttons. The radio will only seek preset stations with a strong signal that are in the selected band.

When a CD is playing in the six-disc CD changer, press this button to go to the next available CD, if multiple CDs are loaded.

▽ ◢ △ **(Volume):** Press the up or the down arrow to increase or to decrease the volume.

(Mute): Press this button to silence the system. Press this button again, or any other radio button, to turn the sound on.

SRCE (Source): Press this button to switch between listening to the radio, a CD, or a remote device. The inactive CD will remain safely inside the radio for future listening.

Radio Reception

You may experience frequency interference and static during normal radio reception if items such as cellphone chargers, vehicle convenience accessories, and external electronic devices are plugged into the accessory power outlet. If there is interference or static, unplug the item from the accessory power outlet.

Downloaded from www.Manualslib.com manuals search engine

AM

The range for most AM stations is greater than for FM, especially at night. The longer range can cause station frequencies to interfere with each other. For better radio reception, most AM radio stations will boost the power levels during the day, and then reduce these levels during the night. Static can also occur when things like storms and power lines interfere with radio reception. When this happens, try reducing the treble on your radio.

FM Stereo

FM stereo will give the best sound, but FM signals will reach only about 10 to 40 miles (16 to 65 km). Tall buildings or hills can interfere with FM signals, causing the sound to fade in and out.

XM™ Satellite Radio Service

XM™ Satellite Radio Service gives digital radio reception from coast-to-coast in the 48 contiguous United States, and in Canada (if available). Just as with FM, tall buildings or hills can interfere with satellite radio signals, causing the sound to fade in and out. In addition, traveling or standing under heavy foliage, bridges, garages, or tunnels may cause loss of XM signal for a period of time. The radio may display NO SIGNAL to indicate interference.

Care of Your CDs and DVDs

Handle discs carefully. Store them in their original cases or other protective cases and away from direct sunlight and dust. If the surface of a disc is soiled, dampen a clean, soft cloth in a mild, neutral detergent solution and clean it, wiping from the center to the edge.

Be sure never to touch the side without writing when handling discs. Pick up discs by grasping the outer edges or the edge of the hole and the outer edge.

Care of the CD and DVD Player

The use of CD lens cleaners for CDs is not advised, due to the risk of contaminating the lens of the CD optics with lubricants internal to the CD mechanism.

Fixed Mast Antenna (Retractable Hardtop)

The fixed mast antenna can withstand most car washes without being damaged. If the mast should ever become slightly bent, straighten it out by hand. If the mast is badly bent, replace it.

Check occasionally to make sure the mast is still tightened to the antenna base located on the roof of the vehicle. If tightening is required, tighten by hand.

Downloaded from www.Manualslib.com manuals search engine

Backglass Antenna

The AM-FM antenna is integrated with the rear window defogger, located in the rear window. Make sure that the inside surface of the rear window is not scratched and that the grid lines on the glass are not damaged. If the inside surface is damaged, it could interfere with radio reception.

Notice: **Using a razor blade or sharp object to clear the inside rear window may damage the rear window antenna and/or the rear window defogger. Repairs would not be covered by your warranty. Do not clear the inside rear window with sharp objects.**

Notice: **Do not apply aftermarket glass tinting with metallic film. The metallic film in some tinting materials will interfere with or distort the incoming radio reception. Any damage caused to your backglass antenna due to metallic tinting materials will not be covered by your warranty.**

Because this antenna is built into the rear window, there is a reduced risk of damage caused by car washes and vandals.

If adding a cellular telephone to your vehicle, and the antenna needs to be attached to the glass, make sure that the grid lines for the AM-FM antenna are not damaged. There is enough space between the grid lines to attach a cellular telephone antenna without interfering with radio reception.

XM™ Satellite Radio Antenna System

The XM™ Satellite Radio antenna is located on the roof of your vehicle. Keep this antenna clear of snow and ice build up for clear radio reception.

The performance of the XM system may be affected if the sunroof is open.

Downloaded from www.Manualslib.com manuals search engine

✍ NOTES

Downloaded from www.Manualslib.com manuals search engine

Section 4 Driving Your Vehicle

Your Driving, the Road, and Your Vehicle 4-2
Defensive Driving 4-2
Drunken Driving 4-3
Control of a Vehicle 4-5
Braking 4-6
Anti-Lock Brake System (ABS) 4-7
Braking in Emergencies 4-8
Traction Control System (TCS) 4-9
Enhanced Traction System (ETS) 4-11
StabiliTrak® System 4-12
Steering 4-13
Off-Road Recovery 4-15
Passing 4-16
Loss of Control 4-17
Driving at Night 4-18
Driving in Rain and on Wet Roads 4-20
City Driving 4-22
Freeway Driving 4-23
Before Leaving on a Long Trip 4-24
Highway Hypnosis 4-25
Hill and Mountain Roads 4-26
Winter Driving 4-27
If Your Vehicle is Stuck in Sand, Mud, Ice or Snow 4-32
Rocking Your Vehicle to Get It Out 4-32
Loading Your Vehicle 4-33
Towing 4-38
Towing Your Vehicle 4-38
Recreational Vehicle Towing 4-38
Towing a Trailer 4-40

Downloaded from www.Manualslib.com manuals search engine

Your Driving, the Road, and Your Vehicle

Defensive Driving

The best advice anyone can give about driving is: Drive defensively.

Please start with a very important safety device in your vehicle: Buckle up. See *Safety Belts: They Are for Everyone on page 1-10*.

⚠ CAUTION:

Defensive driving really means "be ready for anything." On city streets, rural roads, or expressways, it means "always expect the unexpected."

Assume that pedestrians or other drivers are going to be careless and make mistakes. Anticipate what they might do. Be ready for their mistakes.

CAUTION: (Continued)

CAUTION: (Continued)

Rear-end collisions are about the most preventable of accidents. Yet they are common. Allow enough following distance. It is the best defensive driving maneuver, in both city and rural driving. You never know when the vehicle in front of you is going to brake or turn suddenly.

Defensive driving requires that a driver concentrate on the driving task. Anything that distracts from the driving task — such as concentrating on a cellular telephone call, reading, reaching for something on the floor, adjusting settings, or programming vehicle systems — makes proper defensive driving more difficult and can even cause a collision, with resulting injury. Ask a passenger to help do these things, or pull off the road in a safe place to do them. These simple defensive driving techniques could save your life.

Downloaded from www.Manualslib.com manuals search engine

Drunken Driving

Death and injury associated with drinking and driving is a national tragedy. It is the number one contributor to the highway death toll, claiming thousands of victims every year.

Alcohol affects four things that anyone needs to drive a vehicle:

- Judgment
- Muscular Coordination
- Vision
- Attentiveness

Police records show that almost half of all motor vehicle-related deaths involve alcohol. In most cases, these deaths are the result of someone who was drinking and driving. In recent years, more than 16,000 annual motor vehicle-related deaths have been associated with the use of alcohol, with more than 300,000 people injured.

Many adults — by some estimates, nearly half the adult population — choose never to drink alcohol, so they never drive after drinking. For persons under 21, it is against the law in every U.S. state to drink alcohol. There are good medical, psychological and developmental reasons for these laws.

The obvious way to eliminate the leading highway safety problem is for people never to drink alcohol and then drive. But what if people do? How much is “too much” if someone plans to drive? It is a lot less than many might think. Although it depends on each person and situation, here is some general information on the problem.

The Blood Alcohol Concentration (BAC) of someone who is drinking depends upon four things:

- The amount of alcohol consumed
- The drinker’s body weight
- The amount of food that is consumed before and during drinking
- The length of time it has taken the drinker to consume the alcohol

According to the American Medical Association, a 180 lb (82 kg) person who drinks three 12 ounce (355 ml) bottles of beer in an hour will end up with a BAC of about 0.06 percent. The person would reach the same BAC by drinking three 4 ounce (120 ml) glasses of wine or three mixed drinks if each had 1-1/2 ounces (45 ml) of liquors like whiskey, gin, or vodka.

Downloaded from www.Manualslib.com manuals search engine

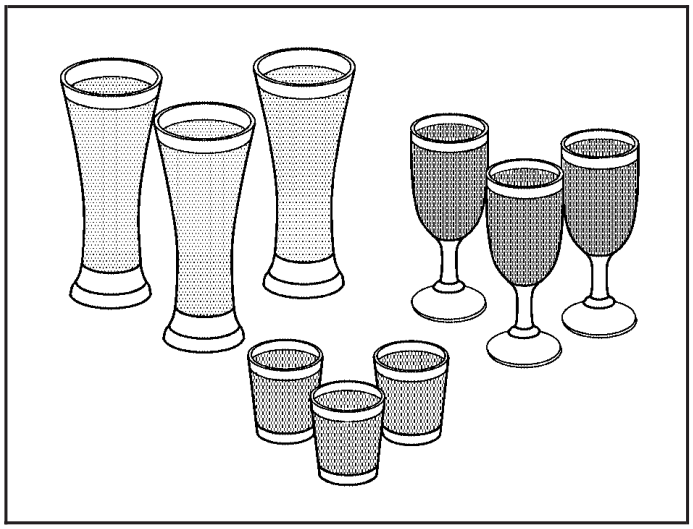

It is the amount of alcohol that counts. For example, if the same person drank three double martinis (3 ounces or 90 ml of liquor each) within an hour, the person's BAC would be close to 0.12 percent. A person who consumes food just before or during drinking will have a somewhat lower BAC level.

There is a gender difference, too. Women generally have a lower relative percentage of body water than men. Since alcohol is carried in body water, this means that a woman generally will reach a higher BAC level than a man of her same body weight will when each has the same number of drinks.

The law in most U.S. states, and throughout Canada, sets the legal limit at 0.08 percent. In some other countries, the limit is even lower. For example, it is 0.05 percent in both France and Germany. The BAC limit for all commercial drivers in the United States is 0.04 percent.

The BAC will be over 0.10 percent after three to six drinks (in one hour). Of course, as we have seen, it depends on how much alcohol is in the drinks, and how quickly the person drinks them.

But the ability to drive is affected well below a BAC of 0.10 percent. Research shows that the driving skills of many people are impaired at a BAC approaching 0.05 percent, and that the effects are worse at night. All drivers are impaired at BAC levels above 0.05 percent. Statistics show that the chance of being in a collision increases sharply for drivers who have a BAC of 0.05 percent or above. A driver with a BAC level of 0.06 percent has doubled his or her chance of having a collision. At a BAC level of 0.10 percent, the chance of this driver having a collision is 12 times greater; at a level of 0.15 percent, the chance is 25 times greater!

The body takes about an hour to rid itself of the alcohol in one drink. No amount of coffee or number of cold showers will speed that up. "I will be careful" is not the right answer.

Downloaded from www.Manualslib.com manuals search engine

What if there is an emergency, a need to take sudden action, as when a child darts into the street? A person with even a moderate BAC might not be able to react quickly enough to avoid the collision.

There is something else about drinking and driving that many people do not know. Medical research shows that alcohol in a person's system can make crash injuries worse, especially injuries to the brain, spinal cord, or heart. This means that when anyone who has been drinking — driver or passenger — is in a crash, that person's chance of being killed or permanently disabled is higher than if the person had not been drinking.

⚠ CAUTION:

Drinking and then driving is very dangerous. Your reflexes, perceptions, attentiveness, and judgment can be affected by even a small amount of alcohol. You can have a serious — or even fatal — collision if you drive after drinking. Please do not drink and drive or ride with a driver who has been drinking. Ride home in a cab; or if you are with a group, designate a driver who will not drink.

Control of a Vehicle

You have three systems that make your vehicle go where you want it to go. They are the brakes, the steering, and the accelerator. All three systems have to do their work at the places where the tires meet the road.

Sometimes, as when you are driving on snow or ice, it is easy to ask more of those control systems than the tires and road can provide. That means you can lose control of your vehicle. See *Traction Control System (TCS) on page 4-9*, *Enhanced Traction System (ETS) on page 4-11* and *StabiliTrak® System on page 4-12*.

Adding non-GM accessories can affect your vehicle's performance. See *Accessories and Modifications on page 5-3*.

Downloaded from www.Manualslib.com manuals search engine

Braking

Braking action involves perception time and reaction time.

First, you have to decide to push on the brake pedal. That is perception time. Then you have to bring up your foot and do it. That is reaction time.

Average reaction time is about three-fourths of a second. But that is only an average. It might be less with one driver and as long as two or three seconds or more with another. Age, physical condition, alertness, coordination, and eyesight all play a part. So do alcohol, drugs, and frustration. But even in three-fourths of a second, a vehicle moving at 60 mph (100 km/h) travels 66 feet (20 m). That could be a lot of distance in an emergency, so keeping enough space between your vehicle and others is important.

And, of course, actual stopping distances vary greatly with the surface of the road, whether it is pavement or gravel; the condition of the road, whether it is wet, dry, or icy; tire tread; the condition of your brakes; the weight of the vehicle; and the amount of brake force applied.

Avoid needless heavy braking. Some people drive in spurts — heavy acceleration followed by heavy braking — rather than keeping pace with traffic. This is a mistake. Your brakes may not have time to cool between hard stops. Your brakes will wear out much faster if you do a lot of heavy braking. If you keep pace with the traffic and allow realistic following distances, you will eliminate a lot of unnecessary braking. That means better braking and longer brake life.

If your engine ever stops while you are driving, brake normally but do not pump your brakes. If you do, the pedal may get harder to push down. If your engine stops, you will still have some power brake assist. But you will use it when you brake. Once the power assist is used up, it may take longer to stop and the brake pedal will be harder to push.

Adding non-GM accessories can affect your vehicle's performance. See *Accessories and Modifications on page 5-3*.

Downloaded from www.Manualslib.com manuals search engine

Anti-Lock Brake System (ABS)

Your vehicle may have anti-lock brakes. ABS is an advanced electronic braking system that will help prevent a braking skid.

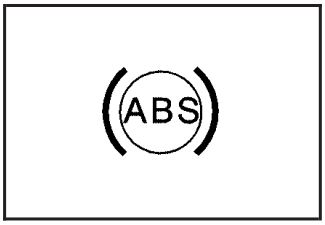

If your vehicle has anti-lock brakes, this warning light on the instrument panel will come on briefly when you start your vehicle.

When you start your engine, or when you begin to drive away, your anti-lock brake system will check itself. You may hear a momentary motor or clicking noise while this test is going on, and you may even notice that your brake pedal moves or pulses a little. This is normal.

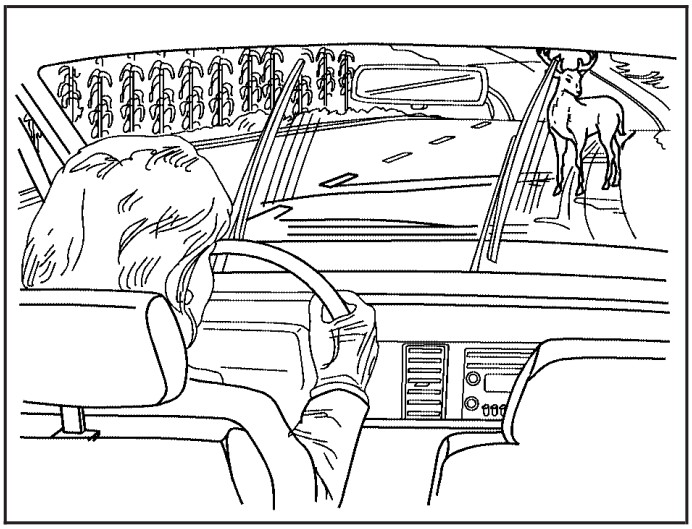

Let us say the road is wet and you are driving safely. Suddenly, an animal jumps out in front of you. You slam on the brakes and continue braking while trying to avoid the animal. Here is what happens with ABS:

A computer senses that wheels are slowing down. If one of the wheels is about to stop rolling, the computer will separately work the brakes at each wheel. See *Braking in Emergencies on page 4-8*.

Downloaded from www.Manualslib.com manuals search engine

The anti-lock system can change the brake pressure faster than any driver could. The computer is programmed to make the most of available tire and road conditions. This can help you steer around the obstacle while braking hard.

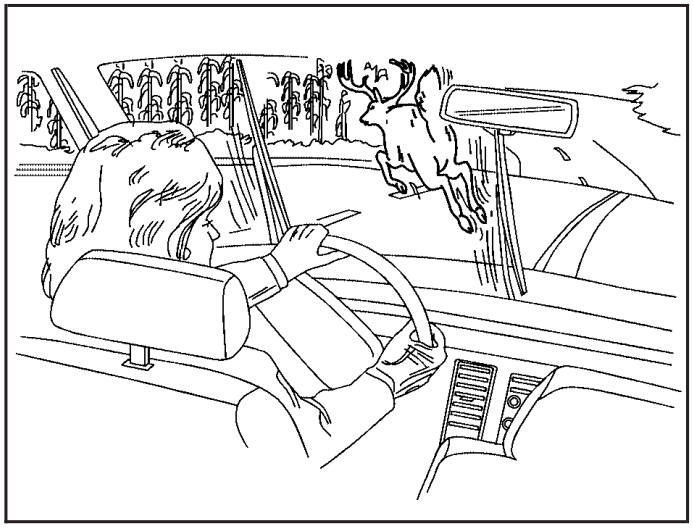

As you brake, your computer keeps receiving updates on wheel speed and controls braking pressure accordingly.

Remember: Anti-lock does not change the time you need to get your foot up to the brake pedal or always decrease stopping distance. If you get too close to the vehicle in front of you, you will not have time to apply your brakes if that vehicle suddenly slows or stops. Always leave enough room up ahead to stop, even though you have anti-lock brakes.

Using Anti-Lock

Do not pump the brakes. Just hold the brake pedal down firmly and let anti-lock work for you. You may feel a slight brake pedal pulsation or notice some noise, but this is normal. See *Braking in Emergencies on page 4-8*.

Braking in Emergencies

At some time, nearly every driver gets into a situation that requires hard braking.

If you have anti-lock brakes, you can steer and brake at the same time. However, if you do not have anti-lock brakes, your first reaction — to hit the brake pedal hard and hold it down — may be the wrong thing to do. Your wheels can stop rolling. Once they do, the vehicle cannot respond to your steering. Momentum will carry it in whatever direction it was headed when the wheels stopped rolling. That could be off the road, into the very thing you were trying to avoid, or into traffic.

Downloaded from www.Manualslib.com manuals search engine

If you do not have anti-lock brakes, use a “squeeze” braking technique. This will give you maximum braking while maintaining steering control. You can do this by pushing on the brake pedal with steadily increasing pressure.

In an emergency, you will probably want to squeeze the brakes hard without locking the wheels. If you hear or feel the wheels sliding, ease off the brake pedal. This will help you retain steering control. If you do have anti-lock brakes, it is different. See *Anti-Lock Brake System (ABS) on page 4-7*.

In many emergencies, steering can help you more than even the very best braking.

Traction Control System (TCS)

Your vehicle may have a Traction Control System (TCS) that limits wheel spin. This is especially useful in slippery road conditions. The system operates only if it senses that one or both of the front wheels are spinning or beginning to lose traction. When this happens, the system reduces engine power and may also upshift the transaxle to limit wheel spin. Also, the traction control system activates the appropriate corner brakes to gain even quicker control to limit wheel spin.

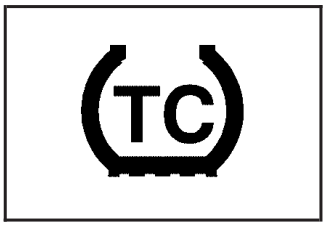

This light, located on the instrument panel, will come on when your Traction Control System is limiting wheel spin.

You may feel or hear the system working, but this is normal.

If your vehicle is in cruise control when the traction control system begins to limit wheel spin, the cruise control will automatically disengage. When road conditions allow you to safely use it again, you may re-engage the cruise control. See *Cruise Control on page 3-10*.

The Traction Control System operates in all transaxle shift lever positions except park or neutral. But the system can upshift the transaxle only as high as the shift lever position you’ve chosen, so you should use the lower gears only when necessary. See *Automatic Transaxle Operation on page 2-28*.

Downloaded from www.Manualslib.com manuals search engine

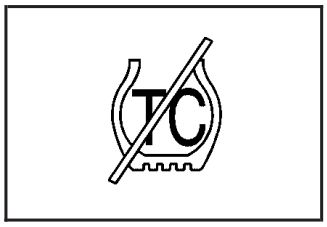

When the system is on, this warning light, located on the instrument panel cluster, will come on to let you know if there's a problem, or if the system has been turned off.

When this warning light is on, the system will not limit wheel spin. Adjust your driving accordingly.

To limit wheel spin, especially in slippery road conditions, you should always leave the Traction Control System on. But you can turn the system off if you prefer.

To turn the system on or off, press the traction control button (TC) located under the climate controls. In order to effectively "rock" the vehicle, you will need to turn off TCS.

If you press the TC button once, the traction control system will turn off and the traction control system warning light will come on. The StabiliTrak® system will stay on. Press the TC button again to turn the system back on. The traction control system warning light will go off. If you press and hold the TC button, the StabiliTrak® system and the traction control system will turn off. Press the TC button again to turn StabiliTrak® and the traction control system back on. For more information, see *StabiliTrak® System on page 4-12*.

When you turn the system off, the Traction Control System warning light will come on and stay on. If the Traction Control System is limiting wheel spin when you press the button to turn the system off, the warning light will come on – but the system won't turn off right away. It will wait until there's no longer a current need to limit wheel spin.

Adding non-GM accessories can affect your vehicle's performance. See *Accessories and Modifications on page 5-3* for more information.

Downloaded from www.Manualslib.com manuals search engine

Enhanced Traction System (ETS)

Your vehicle may have an Enhanced Traction System (ETS) that limits wheel spin. This is especially useful in slippery road conditions. The system operates only if it senses that one or both of the front wheels are spinning or beginning to lose traction. When this happens, the system reduces engine power and may also upshift the transaxle to limit wheel spin.

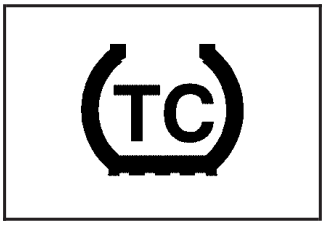

This light, located on the instrument panel, will come on when your Enhanced Traction System is limiting wheel spin.

You may feel or hear the system working, but this is normal.

If your vehicle is in cruise control when the enhanced traction system begins to limit wheel spin, the cruise control will automatically disengage. When road conditions allow you to safely use it again, you may re-engage the cruise control. See *Cruise Control on page 3-10*.

The Enhanced Traction System operates in all transaxle shift lever positions except park, neutral or reverse. But the system can upshift the transaxle only as high as the shift lever position you've chosen, so you should use the lower gears only when necessary. See *Automatic Transaxle Operation on page 2-28*.

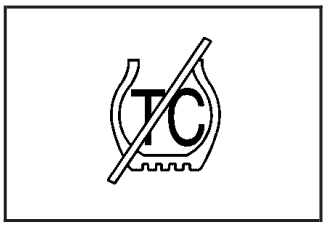

When the system is on, this warning light, located on the instrument panel cluster, will come on to let you know if there's a problem, or if the system has been turned off.

When this warning light is on, the system will not limit wheel spin. Adjust your driving accordingly.

To limit wheel spin, especially in slippery road conditions, you should always leave the Enhanced Traction System on. But you can turn the system off if you prefer.

To turn the system on or off, press the traction control button located on the instrument panel. In order to effectively "rock" the vehicle, you will need to turn off the traction control system.

Downloaded from www.Manualslib.com manuals search engine

When you turn the system off, the Enhanced Traction System warning light will come on and stay on. If the Enhanced Traction System is limiting wheel spin when you press the button to turn the system off, the warning light will come on – but the system won't turn off right away. It will wait until there's no longer a current need to limit wheel spin.

You can turn the system back on at any time by pressing the button again. The Enhanced Traction System warning light should go off.

StabiliTrak® System

Your vehicle may be equipped with a vehicle stability enhancement system called StabiliTrak®. It is an advanced computer controlled system that assists you with directional control of the vehicle in difficult driving conditions.

StabiliTrak® activates when the computer senses a discrepancy between your intended path and the direction the vehicle is actually traveling. StabiliTrak® selectively applies braking pressure at any one of the vehicle's brakes to help steer the vehicle in the direction which you are steering.

This symbol will appear when the StabiliTrak® system is activated.

When you first start your vehicle and begin to drive away, the system performs several diagnostic checks to insure there are no problems. You may hear or feel the system working. This is normal and does not mean there is a problem with your vehicle.

A STABIL NOT READY message may appear on the Driver Information Center (DIC).

See *DIC Warnings and Messages on page 3-48* for more information. When this message is displayed, the system is not operational. Adjust your driving accordingly.

When the system is on, this warning light, located on the instrument panel cluster, will come on to let you know if there's a problem, or if the system has been turned off.

Downloaded from www.Manualslib.com manuals search engine

StabiliTrak® comes on automatically whenever you start your vehicle. To help assist you with directional control of the vehicle, you should always leave the system on. You can turn the traction control system and StabiliTrak® off if you ever need to by pressing and holding the TC (traction control) on/off button. Press the TC button again to turn StabiliTrak® and the traction control system back on. See *Traction Control System (TCS) on page 4-9* for more information.

If your vehicle is in cruise control when the StabiliTrak® activates, the cruise control will automatically disengage. When road conditions allow you to safely use it again, you may reengage the cruise control. See *Cruise Control on page 3-10* for more information.

Steering

Electric Power Steering

If your vehicle has the electric power steering system and the engine stalls while you are driving, the power steering assist system will continue to operate until you are able to stop your vehicle. If you lose power steering assist because the electric power steering system is not functioning, you can steer, but it will take more effort.

If you turn the steering wheel in either direction several times until it stops, or hold the steering wheel in the stopped position for an extended amount of time, you may notice a reduced amount of power steering assist. The normal amount of power steering assist should return shortly after a few normal steering movements.

The electric power steering system does not require regular maintenance. If you suspect steering system problems, contact your dealer for service repairs. See *DIC Warnings and Messages on page 3-48* and *Service Vehicle Soon Light on page 3-44*.

Hydraulic Power Steering

If your vehicle has the hydraulic power steering system and you lose power steering assist because the engine stops or the power steering system is not functioning, you can steer, but it will take much more effort.

Steering Tips

It is important to take curves at a reasonable speed.

A lot of the “driver lost control” accidents mentioned on the news happen on curves. Here is why:

Experienced driver or beginner, each of us is subject to the same laws of physics when driving on curves. The traction of the tires against the road surface makes it possible for the vehicle to change its path when you turn the front wheels. If there is no traction, inertia will keep the vehicle going in the same direction. If you have ever tried to steer a vehicle on wet ice, you will understand this.

Downloaded from www.Manualslib.com manuals search engine

The traction you can get in a curve depends on the condition of your tires and the road surface, the angle at which the curve is banked, and your speed. While you are in a curve, speed is the one factor you can control.

Suppose you are steering through a sharp curve. Then you suddenly apply the brakes. Both control systems — steering and braking — have to do their work where the tires meet the road. Unless you have four-wheel anti-lock brakes, adding the hard braking can demand too much of those places. You can lose control.

The same thing can happen if you are steering through a sharp curve and you suddenly accelerate. Those two control systems — steering and acceleration — can overwhelm those places where the tires meet the road and make you lose control. See *Traction Control System (TCS) on page 4-9*, *Enhanced Traction System (ETS) on page 4-11* and *StabiliTrak® System on page 4-12*.

What should you do if this ever happens? Ease up on the brake or accelerator pedal, steer the vehicle the way you want it to go, and slow down.

Speed limit signs near curves warn that you should adjust your speed. Of course, the posted speeds are based on good weather and road conditions. Under less favorable conditions you will want to go slower.

If you need to reduce your speed as you approach a curve, do it before you enter the curve, while your front wheels are straight ahead.

Try to adjust your speed so you can “drive” through the curve. Maintain a reasonable, steady speed. Wait to accelerate until you are out of the curve, and then accelerate gently into the straightaway.

Adding non-GM accessories can affect your vehicle’s performance. See *Accessories and Modifications on page 5-3*.

Steering in Emergencies

There are times when steering can be more effective than braking. For example, you come over a hill and find a truck stopped in your lane, or a car suddenly pulls out from nowhere, or a child darts out from between parked cars and stops right in front of you. You can avoid these problems by braking — if you can stop in time. But sometimes you cannot; there is not room. That is the time for evasive action — steering around the problem.

Your vehicle can perform very well in emergencies like these. First apply your brakes — but, unless you have anti-lock brakes, not enough to lock your wheels.

See *Braking on page 4-6*. It is better to remove as much speed as you can from a possible collision. Then steer around the problem, to the left or right depending on the space available.

Downloaded from www.Manualslib.com manuals search engine

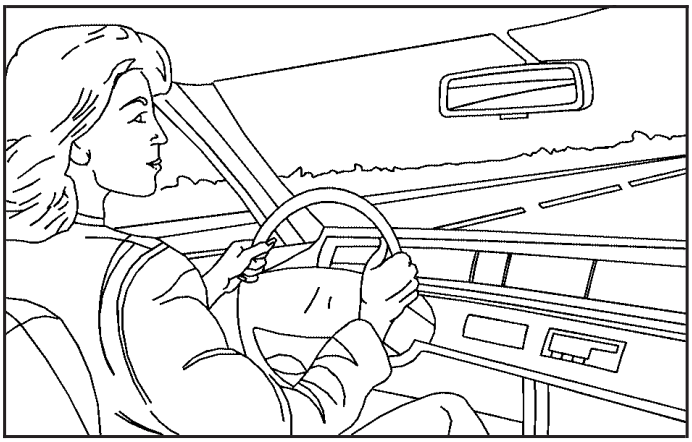

An emergency like this requires close attention and a quick decision. If you are holding the steering wheel at the recommended 9 and 3 o'clock positions, you can turn it a full 180 degrees very quickly without removing either hand. But you have to act fast, steer quickly, and just as quickly straighten the wheel once you have avoided the object.

The fact that such emergency situations are always possible is a good reason to practice defensive driving at all times and wear safety belts properly.

Off-Road Recovery

You may find that your right wheels have dropped off the edge of a road onto the shoulder while you're driving.

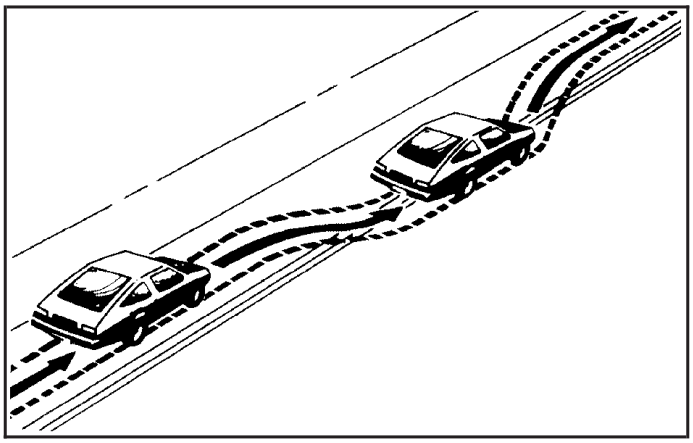

If the level of the shoulder is only slightly below the pavement, recovery should be fairly easy. Ease off the accelerator and then, if there is nothing in the way, steer so that your vehicle straddles the edge of the pavement. You can turn the steering wheel up to one-quarter turn until the right front tire contacts the pavement edge. Then turn your steering wheel to go straight down the roadway.

Downloaded from www.Manualslib.com manuals search engine

Passing

The driver of a vehicle about to pass another on a two-lane highway waits for just the right moment, accelerates, moves around the vehicle ahead, then goes back into the right lane again. A simple maneuver?

Not necessarily! Passing another vehicle on a two-lane highway is a potentially dangerous move, since the passing vehicle occupies the same lane as oncoming traffic for several seconds. A miscalculation, an error in judgment, or a brief surrender to frustration or anger can suddenly put the passing driver face to face with the worst of all traffic accidents — the head-on collision.

So here are some tips for passing:

- Drive ahead. Look down the road, to the sides and to crossroads for situations that might affect your passing patterns. If you have any doubt whatsoever about making a successful pass, wait for a better time.
- Watch for traffic signs, pavement markings and lines. If you can see a sign up ahead that might indicate a turn or an intersection, delay your pass. A broken center line usually indicates it is all right to pass, providing the road ahead is clear. Never cross a solid line on your side of the lane or a double solid line, even if the road seems empty of approaching traffic.
- Do not get too close to the vehicle you want to pass while you are awaiting an opportunity. For one thing, following too closely reduces your area of vision, especially if you are following a larger vehicle. Also, you will not have adequate space if the vehicle ahead suddenly slows or stops. Keep back a reasonable distance.
- When it looks like a chance to pass is coming up, start to accelerate but stay in the right lane and do not get too close. Time your move so you will be increasing speed as the time comes to move into the other lane. If the way is clear to pass, you will have a running start that more than makes up for the distance you would lose by dropping back. And if something happens to cause you to cancel your pass, you need only slow down and drop back again and wait for another opportunity.
- If other vehicles are lined up to pass a slow vehicle, wait your turn. But take care that someone is not trying to pass you as you pull out to pass the slow vehicle. Remember to glance over your shoulder and check the blind spot.

Downloaded from www.Manualslib.com manuals search engine

- Check your mirrors, glance over your shoulder, and start your left lane change signal before moving out of the right lane to pass. When you are far enough ahead of the passed vehicle to see its front in your inside mirror, activate your right lane change signal and move back into the right lane. Remember that your right outside mirror is convex. The vehicle you just passed may seem to be farther away from you than it really is.
- Try not to pass more than one vehicle at a time on two-lane roads. Reconsider before passing the next vehicle.
- Do not overtake a slowly moving vehicle too rapidly. Even though the brake lamps are not flashing, it may be slowing down or starting to turn.
- If you are being passed, make it easy for the following driver to get ahead of you. Perhaps you can ease a little to the right.

Loss of Control

Let us review what driving experts say about what happens when the three control systems — brakes, steering, and acceleration — do not have enough friction where the tires meet the road to do what the driver has asked.

In any emergency, do not give up. Keep trying to steer and constantly seek an escape route or area of less danger.

Skidding

In a skid, a driver can lose control of the vehicle. Defensive drivers avoid most skids by taking reasonable care suited to existing conditions, and by not overdriving those conditions. But skids are always possible.

The three types of skids correspond to your vehicle's three control systems. In the braking skid, your wheels are not rolling. In the steering or cornering skid, too much speed or steering in a curve causes tires to slip and lose cornering force. And in the acceleration skid, too much throttle causes the driving wheels to spin.

A cornering skid is best handled by easing your foot off the accelerator pedal.

If your vehicle does not have a traction system, or if the traction system is off, an acceleration skid is also best handled by easing your foot off the accelerator pedal. See *Enhanced Traction System (ETS) on page 4-11*, *Traction Control System (TCS) on page 4-9*, or *StabiliTrak® System on page 4-12*.

If your vehicle starts to slide, ease your foot off the accelerator pedal and quickly steer the way you want the vehicle to go. If you start steering quickly enough, your vehicle may straighten out. Always be ready for a second skid if it occurs.

Downloaded from www.Manualslib.com manuals search engine

Of course, traction is reduced when water, snow, ice, gravel, or other material is on the road. For safety, you will want to slow down and adjust your driving to these conditions. It is important to slow down on slippery surfaces because stopping distance will be longer and vehicle control more limited.

While driving on a surface with reduced traction, try your best to avoid sudden steering, acceleration, or braking, including engine braking by shifting to a lower gear. Any sudden changes could cause the tires to slide. You may not realize the surface is slippery until your vehicle is skidding. Learn to recognize warning clues — such as enough water, ice, or packed snow on the road to make a mirrored surface — and slow down when you have any doubt.

If you have the anti-lock braking system (ABS), remember: It helps avoid only the braking skid. If you do not have ABS, then in a braking skid, where the wheels are no longer rolling, release enough pressure on the brakes to get the wheels rolling again. This restores steering control. Push the brake pedal down steadily when you have to stop suddenly. As long as the wheels are rolling, you will have steering control.

Driving at Night

Night driving is more dangerous than day driving. One reason is that some drivers are likely to be impaired — by alcohol or drugs, with night vision problems, or by fatigue.

Here are some tips on night driving.

- Drive defensively.
- Do not drink and drive.
- Adjust the inside rearview mirror to reduce the glare from headlamps behind you.
- Since you cannot see as well, you may need to slow down and keep more space between you and other vehicles.
- Slow down, especially on higher speed roads. Your vehicle's headlamps can light up only so much road ahead.
- In remote areas, watch for animals.
- If you are tired, pull off the road in a safe place and rest.

Downloaded from www.Manualslib.com manuals search engine

No one can see as well at night as in the daytime. But as we get older these differences increase. A 50-year-old driver may require at least twice as much light to see the same thing at night as a 20-year-old.

What you do in the daytime can also affect your night vision. For example, if you spend the day in bright sunshine you are wise to wear sunglasses. Your eyes will have less trouble adjusting to night. But if you are driving, do not wear sunglasses at night. They may cut down on glare from headlamps, but they also make a lot of things invisible.

You can be temporarily blinded by approaching headlamps. It can take a second or two, or even several seconds, for your eyes to re-adjust to the dark. When you are faced with severe glare, as from a driver who does not lower the high beams, or a vehicle with misaimed headlamps, slow down a little. Avoid staring directly into the approaching headlamps.

Keep the windshield and all the glass on your vehicle clean — inside and out. Glare at night is made much worse by dirt on the glass. Even the inside of the glass can build up a film caused by dust. Dirty glass makes lights dazzle and flash more than clean glass would, making the pupils of your eyes contract repeatedly.

Remember that the headlamps light up far less of a roadway when you are in a turn or curve. Keep your eyes moving; that way, it is easier to pick out dimly lighted objects. Just as the headlamps should be checked regularly for proper aim, so should your eyes be examined regularly. Some drivers suffer from night blindness — the inability to see in dim light — and are not even aware of it.

Downloaded from www.Manualslib.com manuals search engine

Driving in Rain and on Wet Roads

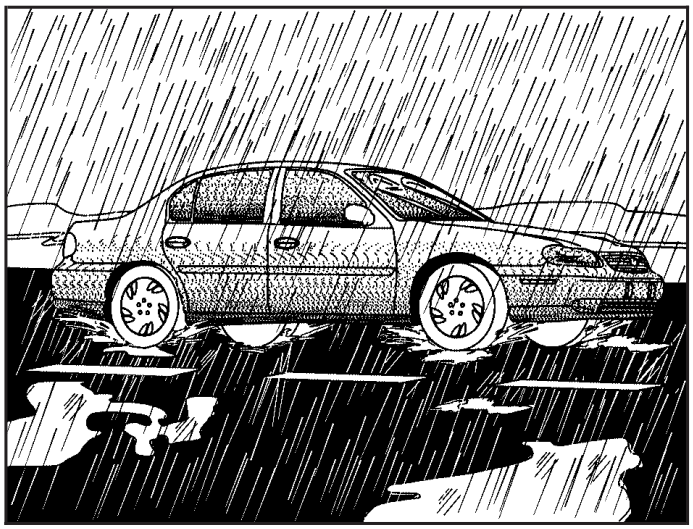

Rain and wet roads can mean driving trouble. On a wet road, you cannot stop, accelerate, or turn as well because your tire-to-road traction is not as good as on dry roads. And, if your tires do not have much tread left, you will get even less traction. It is always wise to go slower and be cautious if rain starts to fall while you are driving. The surface may get wet suddenly when your reflexes are tuned for driving on dry pavement.

The heavier the rain, the harder it is to see. Even if your windshield wiper blades are in good shape, a heavy rain can make it harder to see road signs and traffic signals, pavement markings, the edge of the road, and even people walking.

It is wise to keep your windshield wiping equipment in good shape and keep your windshield washer tank filled with washer fluid. Replace your windshield wiper inserts when they show signs of streaking or missing areas on the windshield, or when strips of rubber start to separate from the inserts.

Driving too fast through large water puddles or even going through some car washes can cause problems, too. The water may affect your brakes. Try to avoid puddles. But if you cannot, try to slow down before you hit them.

⚠ CAUTION:

Wet brakes can cause accidents. They will not work as well in a quick stop and may cause pulling to one side. You could lose control of the vehicle.

After driving through a large puddle of water or a car wash, apply your brake pedal lightly until your brakes work normally.

Downloaded from www.Manualslib.com manuals search engine

Hydroplaning

Hydroplaning is dangerous. So much water can build up under your tires that they can actually ride on the water. This can happen if the road is wet enough and you are going fast enough. When your vehicle is hydroplaning, it has little or no contact with the road.

Hydroplaning does not happen often. But it can if your tires do not have much tread or if the pressure in one or more is low. It can happen if a lot of water is standing on the road. If you can see reflections from trees, telephone poles, or other vehicles, and raindrops dimple the water's surface, there could be hydroplaning.

Hydroplaning usually happens at higher speeds. There just is not a hard and fast rule about hydroplaning. The best advice is to slow down when it is raining.

Driving Through Deep Standing Water

Notice: **If you drive too quickly through deep puddles or standing water, water can come in through your engine's air intake and badly damage your engine. Never drive through water that is slightly lower than the underbody of your vehicle. If you cannot avoid deep puddles or standing water, drive through them very slowly.**

Driving Through Flowing Water

⚠ CAUTION:

Flowing or rushing water creates strong forces. If you try to drive through flowing water, as you might at a low water crossing, your vehicle can be carried away. As little as six inches of flowing water can carry away a smaller vehicle. If this happens, you and other vehicle occupants could drown. Do not ignore police warning signs, and otherwise be very cautious about trying to drive through flowing water.

Some Other Rainy Weather Tips

- Besides slowing down, allow some extra following distance. And be especially careful when you pass another vehicle. Allow yourself more clear room ahead, and be prepared to have your view restricted by road spray.
- Have good tires with proper tread depth. See *Tires on page 5-57*.

Downloaded from www.Manualslib.com manuals search engine

City Driving

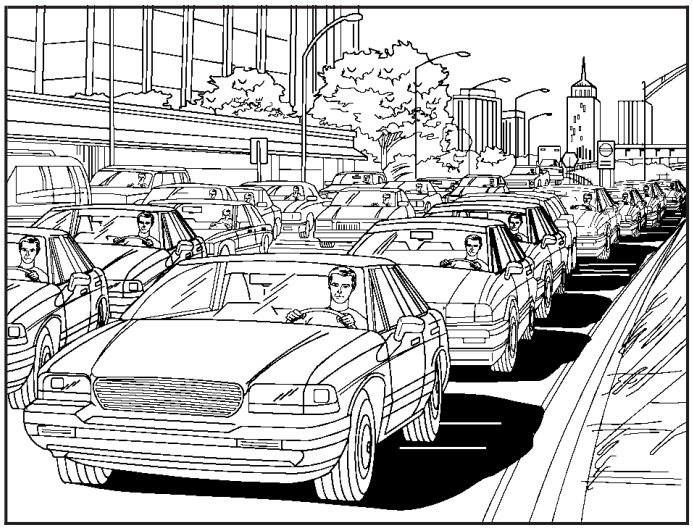

One of the biggest problems with city streets is the amount of traffic on them. You will want to watch out for what the other drivers are doing and pay attention to traffic signals.

Here are ways to increase your safety in city driving:

- Know the best way to get to where you are going. Get a city map and plan your trip into an unknown part of the city just as you would for a cross-country trip.
- Try to use the freeways that rim and crisscross most large cities. You will save time and energy. See *Freeway Driving on page 4-23*.
- Treat a green light as a warning signal. A traffic light is there because the corner is busy enough to need it. When a light turns green, and just before you start to move, check both ways for vehicles that have not cleared the intersection or may be running the red light.

Downloaded from www.Manualslib.com manuals search engine

Freeway Driving

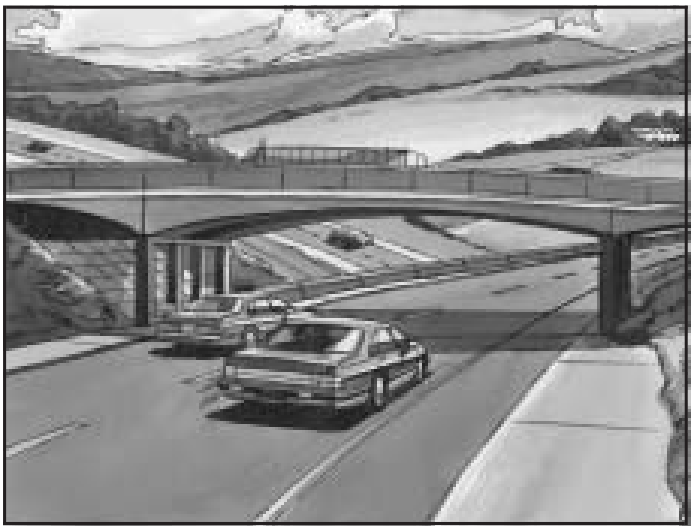

Mile for mile, freeways — also called thruways, parkways, expressways, turnpikes, or superhighways — are the safest of all roads. But they have their own special rules.

The most important advice on freeway driving is: Keep up with traffic and keep to the right. Drive at the same speed most of the other drivers are driving. Too-fast or too-slow driving breaks a smooth traffic flow. Treat the left lane on a freeway as a passing lane.

At the entrance, there is usually a ramp that leads to the freeway. If you have a clear view of the freeway as you drive along the entrance ramp, you should begin to check traffic. Try to determine where you expect to blend with the flow. Try to merge into the gap at close to the prevailing speed. Switch on your turn signal, check your mirrors, and glance over your shoulder as often as necessary. Try to blend smoothly with the traffic flow.

Once you are on the freeway, adjust your speed to the posted limit or to the prevailing rate if it is slower. Stay in the right lane unless you want to pass.

Before changing lanes, check your mirrors. Then use your turn signal.

Downloaded from www.Manualslib.com manuals search engine

Just before you leave the lane, glance quickly over your shoulder to make sure there is not another vehicle in your blind spot.

Once you are moving on the freeway, make certain you allow a reasonable following distance.

Expect to move slightly slower at night.

When you want to leave the freeway, move to the proper lane well in advance. If you miss your exit, do not, under any circumstances, stop and back up. Drive on to the next exit.

The exit ramp can be curved, sometimes quite sharply. The exit speed is usually posted. Reduce your speed according to your speedometer, not to your sense of motion. After driving for any distance at higher speeds, you may tend to think you are going slower than you actually are.

Before Leaving on a Long Trip

Make sure you are ready. Try to be well rested. If you must start when you are not fresh — such as after a day's work — do not plan to make too many miles that first part of the journey. Wear comfortable clothing and shoes you can easily drive in.

Is your vehicle ready for a long trip? If you keep it serviced and maintained, it is ready to go. If it needs service, have it done before starting out. Of course, you will find experienced and able service experts in GM dealerships all across North America. They will be ready and willing to help if you need it.

Downloaded from www.Manualslib.com manuals search engine

Here are some things you can check before a trip:

- *Windshield Washer Fluid:* Is the reservoir full? Are all windows clean inside and outside?
- *Wiper Blades:* Are they in good shape?
- *Fuel, Engine Oil, Other Fluids:* Have you checked all levels?
- *Lamps:* Are they all working? Are the lenses clean?
- *Tires:* They are vitally important to a safe, trouble-free trip. Is the tread good enough for long-distance driving? Are the tires all inflated to the recommended pressure?
- *Weather Forecasts:* What is the weather outlook along your route? Should you delay your trip a short time to avoid a major storm system?
- *Maps:* Do you have up-to-date maps?

Highway Hypnosis

Is there actually such a condition as highway hypnosis? Or is it just plain falling asleep at the wheel? Call it highway hypnosis, lack of awareness, or whatever.

There is something about an easy stretch of road with the same scenery, along with the hum of the tires on the road, the drone of the engine, and the rush of the wind against the vehicle that can make you sleepy. Do not let it happen to you! If it does, your vehicle can leave the road in less than a second, and you could crash and be injured.

What can you do about highway hypnosis? First, be aware that it can happen.

Then here are some tips:

- Make sure your vehicle is well ventilated, with a comfortably cool interior.
- Keep your eyes moving. Scan the road ahead and to the sides. Check your rearview mirrors and your instruments frequently.
- If you get sleepy, pull off the road into a rest, service, or parking area and take a nap, get some exercise, or both. For safety, treat drowsiness on the highway as an emergency.

Downloaded from www.Manualslib.com manuals search engine

Hill and Mountain Roads

Driving on steep hills or mountains is different from driving in flat or rolling terrain.

If you drive regularly in steep country, or if you are planning to visit there, here are some tips that can make your trips safer and more enjoyable.

- Keep your vehicle in good shape. Check all fluid levels and also the brakes, tires, cooling system, and transaxle. These parts can work hard on mountain roads.
- Know how to go down hills. The most important thing to know is this: let your engine do some of the slowing down. Shift to a lower gear when you go down a steep or long hill.

⚠ CAUTION:

If you do not shift down, your brakes could get so hot that they would not work well. You would then have poor braking or even none going down a hill. You could crash. Shift down to let your engine assist your brakes on a steep downhill slope.

Downloaded from www.Manualslib.com manuals search engine

⚠ CAUTION:

Coasting downhill in NEUTRAL (N) or with the ignition off is dangerous. Your brakes will have to do all the work of slowing down. They could get so hot that they would not work well. You would then have poor braking or even none going down a hill. You could crash. Always have your engine running and your vehicle in gear when you go downhill.

- Know how to go uphill. Drive in the highest gear possible.
- Stay in your own lane when driving on two-lane roads in hills or mountains. Do not swing wide or cut across the center of the road. Drive at speeds that let you stay in your own lane.
- As you go over the top of a hill, be alert. There could be something in your lane, like a stalled car or an accident.
- You may see highway signs on mountains that warn of special problems. Examples are long grades, passing or no-passing zones, a falling rocks area, or winding roads. Be alert to these and take appropriate action.

Winter Driving

Here are some tips for winter driving:

- Have your vehicle in good shape for winter.
- You may want to put winter emergency supplies in your trunk.

Also see *Tires on page 5-57*.

Downloaded from www.Manualslib.com manuals search engine

Include an ice scraper, a small brush or broom, a supply of windshield washer fluid, a rag, some winter outer clothing, a small shovel, a flashlight, a red cloth, and a couple of reflective warning triangles. And, if you will be driving under severe conditions, include a small bag of sand, a piece of old carpet, or a couple of burlap bags to help provide traction. Be sure you properly secure these items in your vehicle.

Driving on Snow or Ice

Most of the time, those places where your tires meet the road probably have good traction.

However, if there is snow or ice between your tires and the road, you can have a very slippery situation. You will have a lot less traction, or grip, and will need to be very careful.

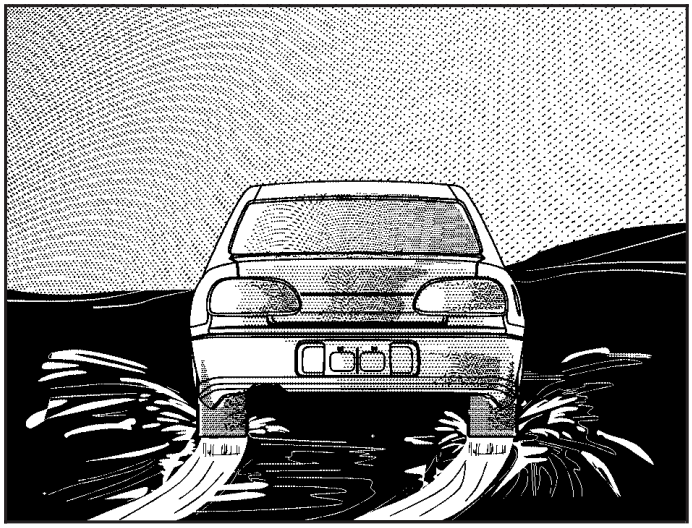

What is the worst time for this? Wet ice. Very cold snow or ice can be slick and hard to drive on.

Downloaded from www.Manualslib.com manuals search engine

But wet ice can be even more trouble because it may offer the least traction of all. You can get wet ice when it is about freezing, 32°F (0°C), and freezing rain begins to fall. Try to avoid driving on wet ice until salt and sand crews can get there.

Whatever the condition — smooth ice, packed, blowing, or loose snow — drive with caution.

If you have a traction system, it will improve your ability to accelerate when driving on a slippery road. Even though your vehicle has a traction system, you will want to slow down and adjust your driving to the road conditions. Under certain conditions, you may want to turn the traction system off, such as when driving through deep snow and loose gravel, to help maintain vehicle motion at lower speeds. See *Traction Control System (TCS) on page 4-9*, *Enhanced Traction System (ETS) on page 4-11*, or *StabiliTrak® System on page 4-12*.

Unless you have the anti-lock braking system (ABS), you will want to brake very gently, too. If you do have ABS, see *Anti-Lock Brake System (ABS) on page 4-7*. ABS improves your vehicle's stability when you make a hard stop on a slippery road. Whether you have ABS or not, you will want to begin stopping sooner than you would on dry pavement. Without ABS, if you feel your vehicle begin to slide, let up on the brakes a little. Push the brake pedal down steadily to get the most traction you can.

Remember, unless you have ABS, if you brake so hard that your wheels stop rolling, you will just slide. Brake so your wheels always keep rolling and you can still steer.

- Whatever your braking system, allow greater following distance on any slippery road.
- Watch for slippery spots. The road might be fine until you hit a spot that is covered with ice. On an otherwise clear road, ice patches may appear in shaded areas where the sun cannot reach, such as around clumps of trees, behind buildings, or under bridges. Sometimes the surface of a curve or an overpass may remain icy when the surrounding roads are clear. If you see a patch of ice ahead of you, brake before you are on it. Try not to brake while you are actually on the ice, and avoid sudden steering maneuvers.

Downloaded from www.Manualslib.com manuals search engine

If You Are Caught in a Blizzard

If you are stopped by heavy snow, you could be in a serious situation. You should probably stay with your vehicle unless you know for sure that you are near help and you can hike through the snow. Here are some things to do to summon help and keep yourself and your passengers safe:

- Turn on your hazard flashers.
- Tie a red cloth to your vehicle to alert police that you have been stopped by the snow.
- Put on extra clothing or wrap a blanket around you. If you do not have blankets or extra clothing, make body insulators from newspapers, burlap bags, rags, floor mats — anything you can wrap around yourself or tuck under your clothing to keep warm.

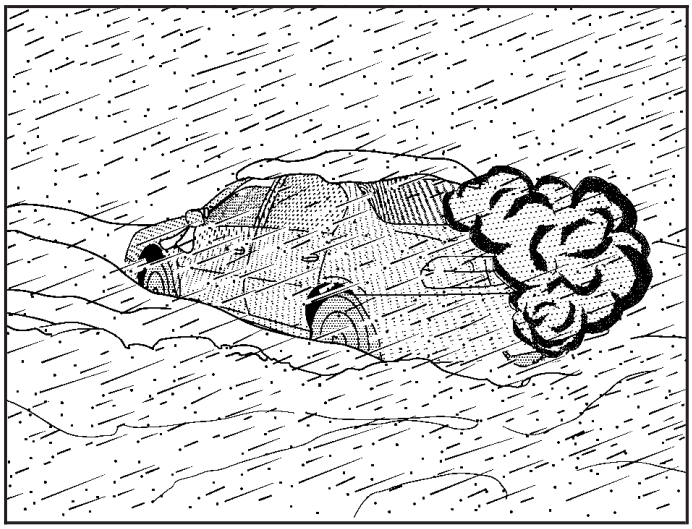

You can run the engine to keep warm, but be careful.

Downloaded from www.Manualslib.com manuals search engine

⚠ CAUTION:

Snow can trap exhaust gases under your vehicle. This can cause deadly CO (carbon monoxide) gas to get inside. CO could overcome you and kill you. You cannot see it or smell it, so you might not know it is in your vehicle. Clear away snow from around the base of your vehicle, especially any that is blocking your exhaust pipe. And check around again from time to time to be sure snow does not collect there.

Open a window just a little on the side of the vehicle that is away from the wind. This will help keep CO out.

Run your engine only as long as you must. This saves fuel. When you run the engine, make it go a little faster than just idle. That is, push the accelerator slightly. This uses less fuel for the heat that you get and it keeps the battery charged. You will need a well-charged battery to restart the vehicle, and possibly for signaling later on with your headlamps. Let the heater run for a while.

Then, shut the engine off and close the window almost all the way to preserve the heat. Start the engine again and repeat this only when you feel really uncomfortable from the cold. But do it as little as possible. Preserve the fuel as long as you can. To help keep warm, you can get out of the vehicle and do some fairly vigorous exercises every half hour or so until help comes.

Downloaded from www.Manualslib.com manuals search engine

If Your Vehicle is Stuck in Sand, Mud, Ice or Snow

In order to free your vehicle when it is stuck, you will need to spin the wheels, but you do not want to spin your wheels too fast. The method known as rocking can help you get out when you are stuck, but you must use caution.

If your vehicle has a traction system, the traction system can often help to free a stuck vehicle. See *Traction Control System (TCS) on page 4-9*, *Enhanced Traction System (ETS) on page 4-11*, or *StabiliTrak® System on page 4-12*. If the stuck condition is too severe for the traction system to free the vehicle, turn the traction system off and use the rocking method.

⚠ CAUTION:

If you let your tires spin at high speed, they can explode, and you or others could be injured. And, the transaxle or other parts of the vehicle can overheat. That could cause an engine compartment fire or other damage. When you are stuck, spin the wheels as little as possible. Do not spin the wheels above 35 mph (55 km/h) as shown on the speedometer.

Notice: **Spinning your wheels can destroy parts of your vehicle as well as the tires. If you spin the wheels too fast while shifting your transaxle back and forth, you can destroy your transaxle. See *Rocking Your Vehicle to Get It Out on page 4-32*.**

For information about using tire chains on your vehicle, see *Tire Chains on page 5-73*.

Rocking Your Vehicle to Get It Out

First, turn your steering wheel left and right. That will clear the area around your front wheels. If your vehicle has a traction system, you should turn your traction system off. See *Traction Control System (TCS) on page 4-9*,*Enhanced Traction System (ETS) on page 4-11*, or *StabiliTrak® System on page 4-12*. Then shift back and forth between REVERSE (R) and a forward gear, or with a manual transaxle, between FIRST (1) or SECOND (2) and REVERSE (R), spinning the wheels as little as possible. Release the accelerator pedal while you shift, and press lightly on the accelerator pedal when the transaxle is in gear. By slowly spinning your wheels in the forward and reverse directions, you will cause a rocking motion that may free your vehicle. If that does not get you out after a few tries, you may need to be towed out. If you do need to be towed out, see *Towing Your Vehicle on page 4-38*.

Downloaded from www.Manualslib.com manuals search engine

Loading Your Vehicle

It is very important to know how much weight your vehicle can carry. This weight is called the vehicle capacity weight and includes the weight of all occupants, cargo and all nonfactory-installed options. Two labels on your vehicle show how much weight it may properly carry, the Tire and Loading Information label and the Certification label.

⚠ CAUTION:

Do not load your vehicle any heavier than the Gross Vehicle Weight Rating (GVWR), or either the maximum front or rear Gross Axle Weight Rating (GAWR). If you do, parts on your vehicle can break, and it can change the way your vehicle handles. These could cause you to lose control and crash. Also, overloading can shorten the life of your vehicle.

Tire and Loading Information Label

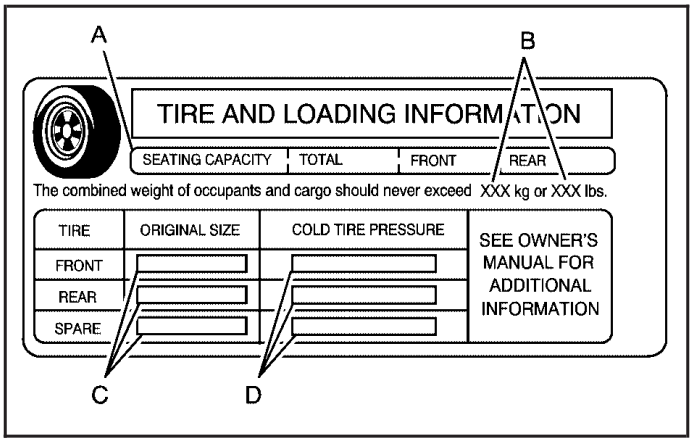

Label Example

A vehicle specific Tire and Loading Information label is attached to the vehicle's center pillar (B-pillar). With the driver's door open, you will find the label attached below the door lock post (striker). The tire and loading information label shows the number of occupant seating positions (A), and the maximum vehicle capacity weight (B) in kilograms and pounds.

The Tire and Loading Information label also shows the tire size of the original equipment tires (C) and the recommended cold tire inflation pressures (D). For more information on tires and inflation see *Tires on page 5-57* and *Inflation - Tire Pressure on page 5-64*.

Downloaded from www.Manualslib.com manuals search engine

There is also important loading information on the Certification label. It tells you the Gross Vehicle Weight Rating (GVWR) and the Gross Axle Weight Rating (GAWR) for the front and rear axle; see “Certification Label” later in this section.

Steps for Determining Correct Load Limit

1. Locate the statement “The combined weight of occupants and cargo should never exceed XXX kg or XXX pounds” on your vehicle placard.
2. Determine the combined weight of the driver and passengers that will be riding in your vehicle.
3. Subtract the combined weight of the driver and passengers from XXX kilograms or XXX pounds.
4. The resulting figure equals the available amount of cargo and luggage load capacity. For example, if the “XXX” amount equals 1400 lbs and there will be five 150 lb passengers in your vehicle, the amount of available cargo and luggage load capacity is 650 lbs (1400 – 750 (5 x 150) = 650 lbs).
5. Determine the combined weight of luggage and cargo being loaded on the vehicle. That weight may not safely exceed the available cargo and luggage load capacity calculated in Step 4.
6. If your vehicle will be towing a trailer, the load from your trailer will be transferred to your vehicle. Consult this manual to determine how this reduces the available cargo and luggage load capacity of your vehicle.

   If your vehicle can tow a trailer, see *Towing a Trailer on page 4-40* for important information on towing a trailer, towing safety rules, and trailering tips.

Downloaded from www.Manualslib.com manuals search engine

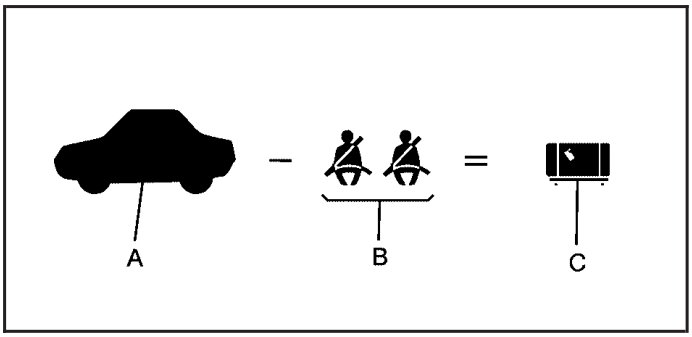

Example 1

Item	Description	Total
A	Vehicle Capacity Weight for Example 1 =	1,000 lbs (453 kg)
B	Subtract Occupant Weight 150 lbs (68 kg) × 2 =	300 lbs (136 kg)
C	Available Occupant and Cargo Weight =	700 lbs (317 kg)

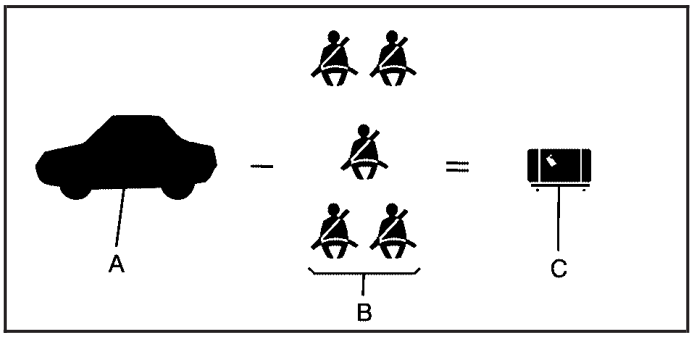

Example 2

Item	Description	Total
A	Vehicle Capacity Weight for Example 2 =	1,000 lbs (453 kg)
B	Subtract Occupant Weight 150 lbs (68 kg) × 5 =	750 lbs (340 kg)
C	Available Cargo Weight =	250 lbs (113 kg)

Downloaded from www.Manualslib.com manuals search engine

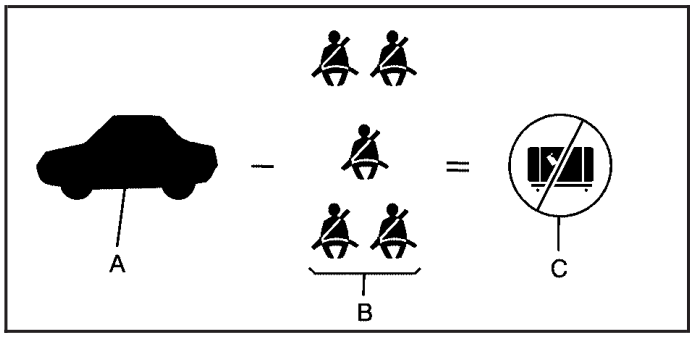

Example 3

Item	Description	Total
A	Vehicle Capacity Weight for Example 3 =	1,000 lbs (453 kg)
B	Subtract Occupant Weight 200 lbs (91 kg) × 5 =	1,000 lbs (453 kg)
C	Available Cargo Weight =	0 lbs (0 kg)

Refer to your vehicle's Tire and Loading Information label for specific information about your vehicle's capacity weight and seating positions. The combined weight of the driver, passengers, and cargo should never exceed your vehicle's capacity weight.

Certification Label

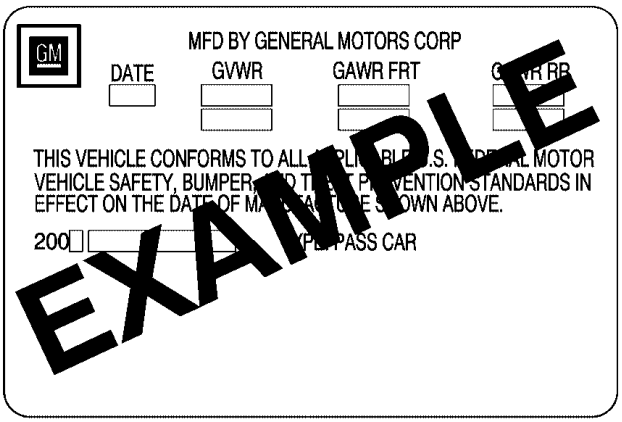

A vehicle specific Certification label, found on the rear edge of the driver's door, tells you the gross weight capacity of your vehicle, called the Gross Vehicle Weight Rating (GVWR). The GVWR includes the weight of the vehicle, all occupants, fuel and cargo. Never exceed the GVWR for your vehicle, or the Gross Axle Weight Rating (GAWR) for either the front or rear axle.

And, if you do have a heavy load, you should spread it out.

Downloaded from www.Manualslib.com manuals search engine

⚠ CAUTION:

Do not load your vehicle any heavier than the Gross Vehicle Weight Rating (GVWR), or either the maximum front or rear Gross Axle Weight Rating (GAWR). If you do, parts on your vehicle can break, and it can change the way your vehicle handles. These could cause you to lose control and crash. Also, overloading can shorten the life of your vehicle.

If you put things inside your vehicle — like suitcases, tools, packages, or anything else — they will go as fast as the vehicle goes. If you have to stop or turn quickly, or if there is a crash, they will keep going.

⚠ CAUTION:

Things you put inside your vehicle can strike and injure people in a sudden stop or turn, or in a crash.

- **Put things in the trunk or rear area of your vehicle. In a trunk, put them as far forward as you can. Try to spread the weight evenly. If you have fold-down rear seats, you will find four anchors on the back wall of your trunk. You can use these anchors to tie down lighter loads. They are not strong enough for heavy things, however, so put them as far forward as you can in the trunk or rear area.**
- **Never stack heavier things, like suitcases, inside the vehicle so that some of them are above the tops of the seats.**
- **Do not leave an unsecured child restraint in your vehicle.**
- **When you carry something inside the vehicle, secure it whenever you can.**
- **Do not leave a seat folded down unless you need to.**

Downloaded from www.Manualslib.com manuals search engine

Towing

Towing Your Vehicle

Consult your dealer or a professional towing service if you need to have your disabled vehicle towed. See *Roadside Assistance Program on page 7-6*.

If you want to tow your vehicle behind another vehicle for recreational purposes (such as behind a motorhome), see “Recreational Vehicle Towing” following.

Recreational Vehicle Towing

Recreational vehicle towing means towing your vehicle behind another vehicle – such as behind a motorhome. The two most common types of recreational vehicle towing are known as “dinghy towing” (towing your vehicle with all four wheels on the ground) and “dolly towing” (towing your vehicle with two wheels on the ground and two wheels up on a device known as a “dolly”).

With the proper preparation and equipment, many vehicles can be towed in these ways. See “Dinghy Towing” and “Dolly Towing,” following.

Here are some important things to consider before you do recreational vehicle towing:

- What’s the towing capacity of the towing vehicle? Be sure you read the tow vehicle manufacturer’s recommendations.
- How far will you tow? Some vehicles have restrictions on how far and how long they can tow.
- Do you have the proper towing equipment? See your dealer or trailering professional for additional advice and equipment recommendations.
- Is your vehicle ready to be towed? Just as you would prepare your vehicle for a long trip, you’ll want to make sure your vehicle is prepared to be towed. See *Before Leaving on a Long Trip on page 4-24*.

Dinghy Towing

If you have a 3.9L V6 engine with an automatic transaxle, your vehicle cannot be dinghy towed.

For vehicles that can be dinghy towed with all four wheels on the ground, follow these steps:

Downloaded from www.Manualslib.com manuals search engine

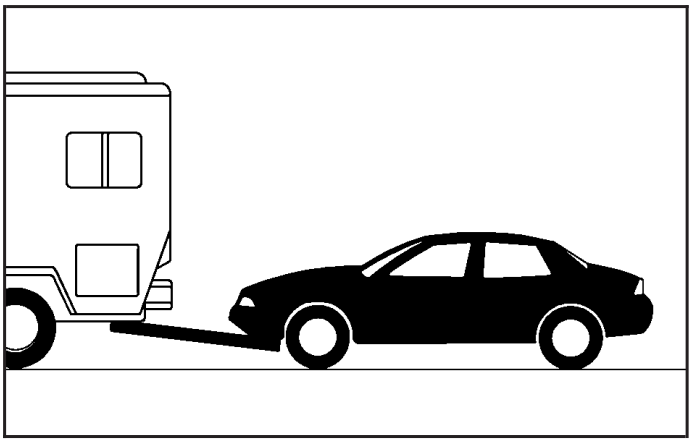

1. Position the vehicle to tow and then secure it.
2. Turn the ignition to OFF.
3. Set the parking brake.
4. To prevent your battery from draining while the vehicle is being towed, remove the following fuse from the engine compartment fuse block: (20 BCM 1). See *Rocking Your Vehicle to Get It Out on page 4-32* for more information.
5. Turn the ignition to ACC.
6. Shift your transaxle to Neutral (N).
7. Release the parking brake.

Notice: **If you exceed 65 mph (105 km/h) while towing your vehicle, it could be damaged. Never exceed 65 mph (105 km/h) while towing your vehicle.**

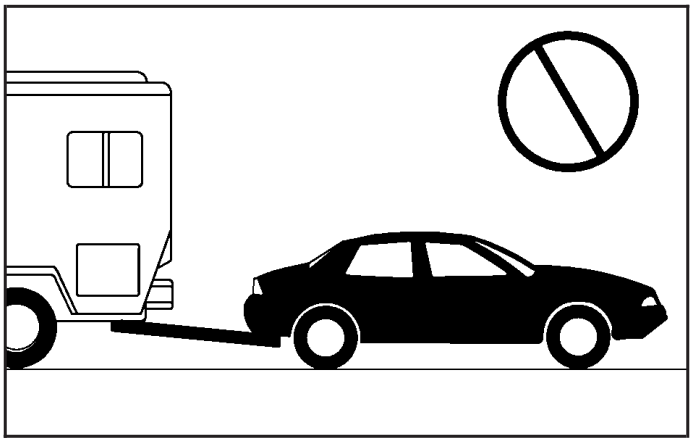

Notice: **Towing your vehicle from the rear could damage it. Also, repairs would not be covered by the warranty. Never have your vehicle towed from the rear.**

Downloaded from www.Manualslib.com manuals search engine

Dolly Towing

To tow your vehicle with two wheels on the ground and a dolly, do the following:

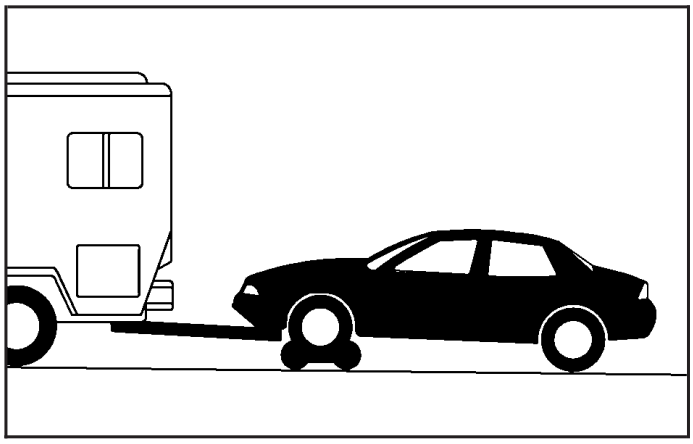

1. Put the front wheels on a dolly.
2. If you have an automatic transaxle, shift the transaxle to PARK (P). If you have a manual transaxle, shift the vehicle to SECOND (2).
3. Set the parking brake and then remove the key.
4. Clamp the steering wheel in a straight-ahead position with a clamping device designed for towing.
5. Release the parking brake.

Notice: **If you exceed 50 mph (80 km/h) while towing your vehicle, it could be damaged. Never exceed 50 mph (80 km/h) while towing your vehicle.**

Towing a Trailer

⚠ CAUTION:

If you do not use the correct equipment and drive properly, you can lose control when you pull a trailer. For example, if the trailer is too heavy, the brakes may not work well — or even at all. You and your passengers could be seriously injured. You may also damage your vehicle; the resulting repairs would not be covered by your warranty. Pull a trailer only if you have followed all the steps in this section. Ask your dealer for advice and information about towing a trailer with your vehicle.

Downloaded from www.Manualslib.com manuals search engine

Your vehicle can tow a trailer if it is equipped with the proper trailer towing equipment. To identify the trailering capacity of your vehicle, you should read the information in “Weight of the Trailer” that appears later in this section. Trailering is different than just driving your vehicle by itself. Trailering means changes in handling, acceleration, braking, durability and fuel economy. Successful, safe trailering takes correct equipment, and it has to be used properly.

That is the reason for this part. In it are many time-tested, important trailering tips and safety rules. Many of these are important for your safety and that of your passengers. So please read this section carefully before you pull a trailer.

Load-pulling components such as the engine, transaxle, wheel assemblies and tires are forced to work harder against the drag of the added weight. The engine is required to operate at relatively higher speeds and under greater loads, generating extra heat. What is more, the trailer adds considerably to wind resistance, increasing the pulling requirements.

If You Do Decide To Pull A Trailer

If you do, here are some important points:

- There are many different laws, including speed limit restrictions, having to do with trailering. Make sure your rig will be legal, not only where you live but also where you will be driving. A good source for this information can be state or provincial police.
- Consider using a sway control. You can ask a hitch dealer about sway controls.
- Do not tow a trailer at all during the first 1,000 miles (1 600 km) your new vehicle is driven. Your engine, axle or other parts could be damaged.
- Then, during the first 500 miles (800 km) that you tow a trailer, do not drive over 50 mph (80 km/h) and do not make starts at full throttle. This helps your engine and other parts of your vehicle wear in at the heavier loads.
- Obey speed limit restrictions when towing a trailer. Do not drive faster than the maximum posted speed for trailers, or no more than 55 mph (90 km/h), to save wear on your vehicle’s parts.

Downloaded from www.Manualslib.com manuals search engine

Three important considerations have to do with weight:

- the weight of the trailer
- the weight of the trailer tongue
- and the total weight on your vehicle's tires.

Weight of the Trailer

How heavy can a trailer safely be?

It should never weigh more than 1,000 lbs (453 kg). But even that can be too heavy.

It depends on how you plan to use your rig. For example, speed, altitude, road grades, outside temperature and how much your vehicle is used to pull a trailer are all important. It can also depend on any special equipment that you have on your vehicle, and the amount of tongue weight the vehicle can carry. See "Weight of the Trailer Tongue" later in this section for more information.

Maximum trailer weight is calculated assuming only the driver is in the tow vehicle and it has all the required trailering equipment. The weight of additional optional equipment, passengers and cargo in the tow vehicle must be subtracted from the maximum trailer weight.

When towing a trailer on long uphill grades and the outside temperature is above 85°F (29°C), reduce your vehicle speed to 45 mph (72 km/h) to avoid overheating the engine cooling system.

You can ask your dealer for additional trailering information or advice, or you can write us at:

Pontiac-GMC Customer Assistance
P.O. Box 33172
Detroit, MI 48232-5172

In Canada, write to:

General Motors of Canada Limited
Customer Communication Centre, 163-005
1908 Colonel Sam Drive
Oshawa, Ontario L1H 8P7

Downloaded from www.Manualslib.com manuals search engine

Weight of the Trailer Tongue

The tongue load (A) of any trailer is an important weight to measure because it affects the total or gross weight of your vehicle. The Gross Vehicle Weight (GVW) includes the curb weight of the vehicle, any cargo you may carry in it, and the people who will be riding in the vehicle. If you have a lot of options, equipment, passengers or cargo in your vehicle, it will reduce the tongue weight your vehicle can carry, which will also reduce the trailer weight your vehicle can tow. And if you tow a trailer, you must add the tongue load to the GVW because your vehicle will be carrying that weight, too. See *Loading Your Vehicle on page 4-33* for more information about your vehicle's maximum load capacity.

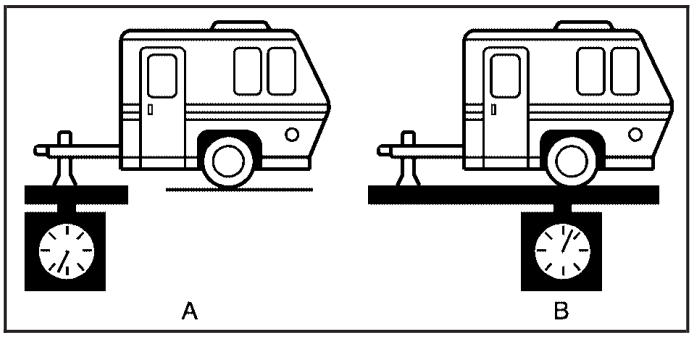

If you are using a weight-carrying hitch, the trailer tongue (A) should weigh 10 to 15 percent of the total loaded trailer weight (B).

After you have loaded your trailer, weigh the trailer and then the tongue, separately, to see if the weights are proper. If they are not, you may be able to get them right simply by moving some items around in the trailer.

Total Weight on Your Vehicle's Tires

Be sure your vehicle's tires are inflated to the upper limit for cold tires. You will find these numbers on the Tire-Loading Information label at the rear edge of the driver's door or see *Loading Your Vehicle on page 4-33*. Then be sure you do not go over the GVW limit for your vehicle, including the weight of the trailer tongue.

Downloaded from www.Manualslib.com manuals search engine

Hitches

It is important to have the correct hitch equipment. Crosswinds, large trucks going by and rough roads are a few reasons why you'll need the right hitch. Here are some rules to follow:

- The rear bumper on your vehicle is not intended for hitches. Do not attach rental hitches or other bumper-type hitches to it. Use only a frame-mounted hitch that does not attach to the bumper.
- Will you have to make any holes in the body of your vehicle when you install a trailer hitch? If you do, then be sure to seal the holes later when you remove the hitch. If you do not seal them, deadly carbon monoxide (CO) from your exhaust can get into your vehicle. See *Engine Exhaust on page 2-37*. Dirt and water can, too.

Safety Chains

You should always attach chains between your vehicle and your trailer. Cross the safety chains under the tongue of the trailer so that the tongue will not drop to the road if it becomes separated from the hitch. Instructions about safety chains may be provided by the hitch manufacturer or by the trailer manufacturer. Follow the manufacturer's recommendation for attaching safety chains and do not attach them to the bumper. Always leave just enough slack so you can turn with your rig. And, never allow safety chains to drag on the ground.

Trailer Brakes

Does your trailer have its own brakes?

Be sure to read and follow the instructions for the trailer brakes so you will be able to install, adjust and maintain them properly. And because you may have anti-lock brakes, do not try to tap into your vehicle's brake system. If you do, both systems will not work well, or at all.

Driving with a Trailer

Towing a trailer requires a certain amount of experience. Before setting out for the open road, you will want to get to know your rig. Acquaint yourself with the feel of handling and braking with the added weight of the trailer. And always keep in mind that the vehicle you are driving is now a good deal longer and not nearly as responsive as your vehicle is by itself.

Before you start, check all trailer hitch parts and attachments, safety chains, electrical connector, lamps, tires and mirror adjustment. If the trailer has electric brakes, start your vehicle and trailer moving and then apply the trailer brake controller by hand to be sure the brakes are working. This lets you check your electrical connection at the same time.

During your trip, check occasionally to be sure that the load is secure, and that the lamps and any trailer brakes are still working.

Downloaded from www.Manualslib.com manuals search engine

Following Distance

Stay at least twice as far behind the vehicle ahead as you would when driving your vehicle without a trailer. This can help you avoid situations that require heavy braking and sudden turns.

Passing

You will need more passing distance up ahead when you are towing a trailer. And, because you're a good deal longer, you'll need to go much farther beyond the passed vehicle before you can return to your lane.

Backing Up

Hold the bottom of the steering wheel with one hand. Then, to move the trailer to the left, just move that hand to the left. To move the trailer to the right, move your hand to the right. Always back up slowly and, if possible, have someone guide you.

Making Turns

Notice: **Making very sharp turns while trailering could cause the trailer to come in contact with the vehicle. Your vehicle could be damaged. Avoid making very sharp turns while trailering.**

When you are turning with a trailer, make wider turns than normal. Do this so your trailer will not strike soft shoulders, curbs, road signs, trees or other objects. Avoid jerky or sudden maneuvers. Signal well in advance.

Turn Signals When Towing a Trailer

When you tow a trailer, your vehicle may need a different turn signal flasher and/or extra wiring. Check with your dealer. The arrows on your instrument panel will flash whenever you signal a turn or lane change. Properly hooked up, the trailer lamps will also flash, telling other drivers you are about to turn, change lanes or stop.

When towing a trailer, the arrows on your instrument panel will flash for turns even if the bulbs on the trailer are burned out. Thus, you may think drivers behind you are seeing your signal when they are not. It is important to check occasionally to be sure the trailer bulbs are still working.

Downloaded from www.Manualslib.com manuals search engine

Driving On Grades

When towing a trailer on long uphill grades and the outside temperature is above 85°F (29°C), reduce your vehicle speed to 45 mph (72 km/h) to avoid overheating the engine cooling system.

Reduce speed and shift to a lower gear *before* you start down a long or steep downgrade. If you do not shift down, you might have to use your brakes so much that they would get hot and no longer work well.

Parking on Hills

⚠ CAUTION:

You really should not park your vehicle, with a trailer attached, on a hill. If something goes wrong, your rig could start to move. People can be injured, and both your vehicle and the trailer can be damaged.

But if you ever have to park your rig on a hill, here is how to do it:

1. Apply your regular brakes, but do not shift into PARK (P) for an automatic transaxle or into gear for a manual transaxle. When parking uphill, turn your wheels away from the curb. When parking downhill, turn your wheels into the curb.
2. Have someone place chocks under the trailer wheels.
3. When the chocks are in place, release the regular brakes until the chocks absorb the load.
4. Reapply the regular brakes. Then apply your parking brake and shift into PARK (P).
5. Release the regular brakes.

Downloaded from www.Manualslib.com manuals search engine

When You Are Ready to Leave After Parking on a Hill

1. Apply your regular brakes and hold the pedal down while you:
   - start your engine,
   - shift into a gear, and
   - release the parking brake.
2. Let up on the brake pedal.
3. Drive slowly until the trailer is clear of the chocks.
4. Stop and have someone pick up and store the chocks.

Maintenance When Trailer Towing

Your vehicle will need service more often when you are pulling a trailer. See the Maintenance Schedule for more on this. Things that are especially important in trailer operation are automatic transaxle fluid (do not overfill), engine oil, drive belt, cooling system and brake system. Each of these is covered in this manual, and the Index will help you find them quickly. If you are trailering, it is a good idea to review this information before you start your trip.

Check periodically to see that all hitch nuts and bolts are tight.

Engine Cooling When Trailer Towing

Your cooling system may temporarily overheat during severe operating conditions. See *Engine Overheating on page 5-30*.

Downloaded from www.Manualslib.com manuals search engine

NOTES

Downloaded from www.Manualslib.com manuals search engine

Section 5 Service and Appearance Care

Service 5-3
Accessories and Modifications 5-3
California Proposition 65 Warning 5-3
Doing Your Own Service Work 5-4
Adding Equipment to the Outside of Your Vehicle 5-5

Fuel 5-5
Gasoline Octane 5-5
Gasoline Specifications 5-5
California Fuel 5-6
Additives 5-6
Fuels in Foreign Countries 5-7
Filling the Tank 5-8
Filling a Portable Fuel Container 5-10

Checking Things Under the Hood 5-10
Hood Release 5-11
Engine Compartment Overview 5-12
Engine Oil 5-17
Engine Oil Life System 5-20
Engine Air Cleaner/Filter 5-22
Automatic Transaxle Fluid (2.4L LE5 and 3.5L LX9 Engines) 5-23
Automatic Transaxle Fluid (3.9L LZ9 Engine) 5-24
Manual Transaxle Fluid 5-26
Hydraulic Clutch 5-26
Engine Coolant 5-27
Coolant Surge Tank Pressure Cap 5-30
Engine Overheating 5-30
Overheated Engine Protection Operating Mode 5-32
Cooling System 5-32
Power Steering Fluid 5-37
Windshield Washer Fluid 5-38
Brakes 5-39
Battery 5-42
Jump Starting 5-42

Headlamp Aiming 5-47

Bulb Replacement 5-49
Halogen Bulbs 5-49
Headlamps, Front Turn Signal, Sidemarker, and Parking Lamps 5-50
Center High-Mounted Stoplamp (CHMSL) (Sedan) 5-51
Center High-Mounted Stoplamp (CHMSL) (Retractable Hardtop and Coupe) 5-51
Taillamps, Turn Signal, Sidemarker, Stoplamps and Back-up Lamps (Sedan) 5-52
Taillamps, Turn Signal, Sidemarker, Stoplamps and Back-up Lamps (Coupe) 5-53
Taillamps, Turn Signal, Sidemarker, Stoplamps and Back-up Lamps (Retractable Hardtop) 5-54
Replacement Bulbs 5-55

Downloaded from www.Manualslib.com manuals search engine

Section 5 Service and Appearance Care

Windshield Wiper Blade Replacement 5-56
Tires 5-57
Tire Sidewall Labelling 5-59
Tire Terminology and Definitions 5-62
Inflation - Tire Pressure 5-64
Tire Inspection and Rotation 5-66
When It Is Time for New Tires 5-67
Buying New Tires 5-68
Different Size Tires and Wheels 5-69
Uniform Tire Quality Grading 5-70
Wheel Alignment and Tire Balance 5-71
Wheel Replacement 5-72
Tire Chains 5-73
If a Tire Goes Flat 5-74
Changing a Flat Tire 5-74
Removing the Spare Tire and Tools 5-76
Removing the Flat Tire and Installing the Spare Tire 5-78
Storing a Flat or Spare Tire and Tools 5-83
Compact Spare Tire 5-86
Appearance Care 5-87
Cleaning the Inside of Your Vehicle 5-88
Fabric/Carpet 5-89
Leather 5-90
Instrument Panel, Vinyl, and Other Plastic Surfaces 5-90
Care of Safety Belts 5-91
Weatherstrips 5-91
Washing Your Vehicle 5-91
Cleaning Exterior Lamps/Lenses 5-91
Finish Care 5-92
Windshield and Wiper Blades 5-92
Aluminum Wheels 5-93
Tires 5-93
Sheet Metal Damage 5-94
Finish Damage 5-94
Underbody Maintenance 5-94
Chemical Paint Spotting 5-94
Vehicle Care/Appearance Materials 5-95
Vehicle Identification 5-96
Vehicle Identification Number (VIN) 5-96
Service Parts Identification Label 5-96
Electrical System 5-97
Add-On Electrical Equipment 5-97
Windshield Wiper Fuses 5-97
Power Windows and Other Power Options 5-97
Fuses 5-97
Instrument Panel Fuse Block 5-98
Engine Compartment Fuse Block 5-100
Rear Compartment Fuse Block 5-102
Capacities and Specifications 5-105

Downloaded from www.Manualslib.com manuals search engine

Service

Your dealer knows your vehicle best and wants you to be happy with it. We hope you will go to your dealer for all your service needs. You will get genuine GM parts and GM-trained and supported service people.

We hope you will want to keep your GM vehicle all GM. Genuine GM parts have one of these marks:

ACDelco®

GM Parts®

GM® Goodwrench

GM® Accessories

Accessories and Modifications

When you add non-GM accessories to your vehicle they can affect your vehicle's performance and safety, including such things as, braking, electronic systems like traction control, stability, ride and handling, emissions systems, aerodynamics, and durability. Some of these accessories may even cause malfunction or damage not covered by warranty.

GM Accessories are designed to complement and function with other systems on your vehicle. Your GM dealer can accessorize your vehicle using genuine GM Accessories. When you go to your GM dealer and ask for GM Accessories, you will know that GM-trained and supported service technicians will perform the work using genuine GM Accessories.

California Proposition 65 Warning

Most motor vehicles, including this one, contain and/or emit chemicals known to the State of California to cause cancer and birth defects or other reproductive harm. Engine exhaust, many parts and systems (including some inside the vehicle), many fluids, and some component wear by-products contain and/or emit these chemicals.

Downloaded from www.Manualslib.com manuals search engine

Doing Your Own Service Work

If you want to do some of your own service work, you will want to use the proper service manual. It tells you much more about how to service your vehicle than this manual can. To order the proper service manual, see *Service Publications Ordering Information on page 7-11*.

Your vehicle has an airbag system. Before attempting to do your own service work, see *Servicing Your Airbag-Equipped Vehicle on page 1-70*.

You should keep a record with all parts receipts and list the mileage and the date of any service work you perform. See *Maintenance Record on page 6-14*.

⚠ CAUTION:

You can be injured and your vehicle could be damaged if you try to do service work on a vehicle without knowing enough about it.

- **Be sure you have sufficient knowledge, experience, the proper replacement parts, and tools before you attempt any vehicle maintenance task.**
- **Be sure to use the proper nuts, bolts, and other fasteners. English and metric fasteners can be easily confused. If you use the wrong fasteners, parts can later break or fall off. You could be hurt.**

Downloaded from www.Manualslib.com manuals search engine

Adding Equipment to the Outside of Your Vehicle

Things you might add to the outside of your vehicle can affect the airflow around it. This may cause wind noise and affect windshield washer performance. Check with your dealer before adding equipment to the outside of your vehicle.

Fuel

Use of the recommended fuel is an important part of the proper maintenance of your vehicle.

Gasoline Octane

Use regular unleaded gasoline with a posted octane rating of 87 or higher. If the octane rating is less than 87, you may notice an audible knocking noise when you drive, commonly referred to as spark knock. If this occurs, use a gasoline rated at 87 octane or higher as soon as possible. If you are using gasoline rated at 87 octane or higher and you hear heavy knocking, your engine needs service.

Gasoline Specifications

At a minimum, gasoline should meet ASTM specification D 4814 in the United States or CAN/CGSB-3.5 in Canada. Some gasolines may contain an octane-enhancing additive called methylcyclopentadienyl manganese tricarbonyl (MMT). General Motors recommends against the use of gasolines containing MMT. See *Additives on page 5-6* for additional information.

Downloaded from www.Manualslib.com manuals search engine

California Fuel

If your vehicle is certified to meet California Emissions Standards, it is designed to operate on fuels that meet California specifications. See the underhood emission control label. If this fuel is not available in states adopting California emissions standards, your vehicle will operate satisfactorily on fuels meeting federal specifications, but emission control system performance may be affected. The malfunction indicator lamp may turn on and your vehicle may fail a smog-check test. See *Malfunction Indicator Lamp on page 3-40*. If this occurs, return to your authorized GM dealer for diagnosis. If it is determined that the condition is caused by the type of fuel used, repairs may not be covered by your warranty.

Additives

To provide cleaner air, all gasolines in the United States are now required to contain additives that will help prevent engine and fuel system deposits from forming, allowing your emission control system to work properly. In most cases, you should not have to add anything to your fuel. However, some gasolines contain only the minimum amount of additive required to meet U.S. Environmental Protection Agency regulations. To help keep fuel injectors and intake valves clean, or if your vehicle experiences problems due to dirty injectors or valves, look for gasoline that is advertised as TOP TIER Detergent Gasoline. Also, your GM dealer has additives that will help correct and prevent most deposit-related problems.

Downloaded from www.Manualslib.com manuals search engine

Gasolines containing oxygenates, such as ethers and ethanol, and reformulated gasolines may be available in your area. General Motors recommends that you use these gasolines if they comply with the specifications described earlier. However, E85 (85% ethanol) and other fuels containing more than 10% ethanol must not be used in vehicles that were not designed for those fuels.

Notice: **Your vehicle was not designed for fuel that contains methanol. Do not use fuel containing methanol. It can corrode metal parts in your fuel system and also damage the plastic and rubber parts. That damage would not be covered under your warranty.**

Some gasolines that are not reformulated for low emissions may contain an octane-enhancing additive called methylcyclopentadienyl manganese tricarbonyl (MMT); ask the attendant where you buy gasoline whether the fuel contains MMT. General Motors recommends against the use of such gasolines. Fuels containing MMT can reduce the life of spark plugs and the performance of the emission control system may be affected. The malfunction indicator lamp may turn on. If this occurs, return to your authorized GM dealer for service.

Fuels in Foreign Countries

If you plan on driving in another country outside the United States or Canada, the proper fuel may be hard to find. Never use leaded gasoline or any other fuel not recommended in the previous text on fuel. Costly repairs caused by use of improper fuel would not be covered by your warranty.

To check the fuel availability, ask an auto club, or contact a major oil company that does business in the country where you will be driving.

Downloaded from www.Manualslib.com manuals search engine

Filling the Tank

⚠ CAUTION:

Fuel vapor burns violently and a fuel fire can cause bad injuries. To help avoid injuries to you and others, read and follow all the instructions on the pump island. Turn off your engine when you are refueling. Do not smoke if you are near fuel or refueling your vehicle. Keep sparks, flames, and smoking materials away from fuel. Do not leave the fuel pump unattended when refueling your vehicle — this is against the law in some places. Keep children away from the fuel pump; never let children pump fuel.

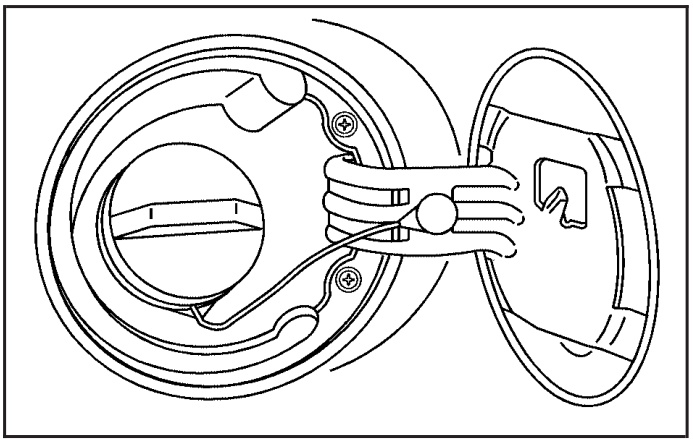

The tethered fuel cap is located behind a hinged fuel door on the passenger's side of the vehicle.

To remove the fuel cap, turn it slowly counterclockwise. The fuel cap has a spring in it; if the cap is released too soon, it will spring back to the right.

While refueling, hang the tethered fuel cap from the hook on the fuel door.

Downloaded from www.Manualslib.com manuals search engine

⚠ CAUTION:

If you spill fuel and then something ignites it, you could be badly burned. Fuel can spray out on you if you open the fuel cap too quickly. This spray can happen if your tank is nearly full, and is more likely in hot weather. Open the fuel cap slowly and wait for any hiss noise to stop. Then unscrew the cap all the way.

Be careful not to spill fuel. Do not top off or overfill the tank, and wait a few seconds after you have finished pumping before removing the nozzle. Clean fuel from painted surfaces as soon as possible. See *Washing Your Vehicle on page 5-91*.

When replacing the fuel cap, turn it clockwise until it clicks. Make sure the cap is fully installed. The diagnostic system can determine if the fuel cap has been left off or improperly installed. This would allow fuel to evaporate into the atmosphere. See *Malfunction Indicator Lamp on page 3-40*.

The CHECK GAS CAP message will be displayed on the Driver Information Center (DIC) if the fuel cap is not properly installed. See *DIC Warnings and Messages on page 3-48* for more information.

⚠ CAUTION:

If a fire starts while you are refueling, do not remove the nozzle. Shut off the flow of fuel by shutting off the pump or by notifying the station attendant. Leave the area immediately.

Notice: **If you need a new fuel cap, be sure to get the right type. Your dealer can get one for you. If you get the wrong type, it may not fit properly. This may cause your malfunction indicator lamp to light and may damage your fuel tank and emissions system. See *Malfunction Indicator Lamp on page 3-40*.**

Downloaded from www.Manualslib.com manuals search engine

Filling a Portable Fuel Container

⚠ CAUTION:

Never fill a portable fuel container while it is in your vehicle. Static electricity discharge from the container can ignite the gasoline vapor. You can be badly burned and your vehicle damaged if this occurs. To help avoid injury to you and others:

- **Dispense gasoline only into approved containers.**
- **Do not fill a container while it is inside a vehicle, in a vehicle's trunk, pickup bed, or on any surface other than the ground.**
- **Bring the fill nozzle in contact with the inside of the fill opening before operating the nozzle. Contact should be maintained until the filling is complete.**
- **Do not smoke while pumping gasoline.**

Checking Things Under the Hood

⚠ CAUTION:

An electric fan under the hood can start up and injure you even when the engine is not running. Keep hands, clothing and tools away from any underhood electric fan.

⚠ CAUTION:

Things that burn can get on hot engine parts and start a fire. These include liquids like fuel, oil, coolant, brake fluid, windshield washer and other fluids, and plastic or rubber. You or others could be burned. Be careful not to drop or spill things that will burn onto a hot engine.

Downloaded from www.Manualslib.com manuals search engine

Hood Release

To open the hood, do the following:

1. Pull the handle with this symbol on it. It is located under the instrument panel on the driver's side of the vehicle.

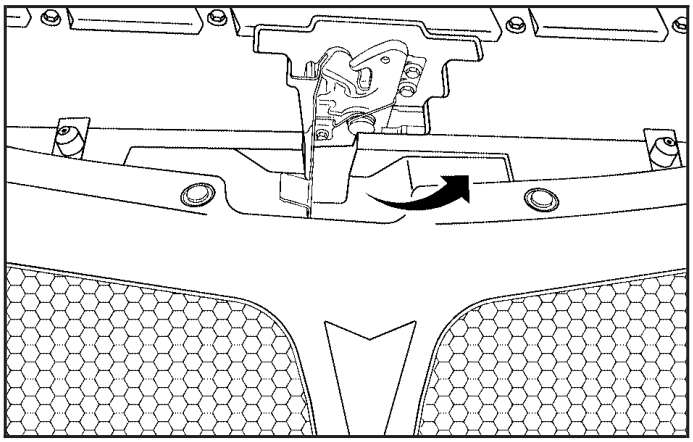

2. Then go to the front of the vehicle and push the secondary hood release lever to the right.
3. Lift the hood, release the hood prop rod from its retainer and put the hood prop into the slot in the hood marked with an arrow.

Before closing the hood, be sure all the filler caps are on properly. Then lift the hood to relieve pressure on the hood prop. Remove the hood prop from the slot in the hood and return the prop to its retainer. Then let the hood down and close it firmly.

Downloaded from www.Manualslib.com manuals search engine

Engine Compartment Overview

When you open the hood on the 2.4L LE5 engine, here is what you will see:

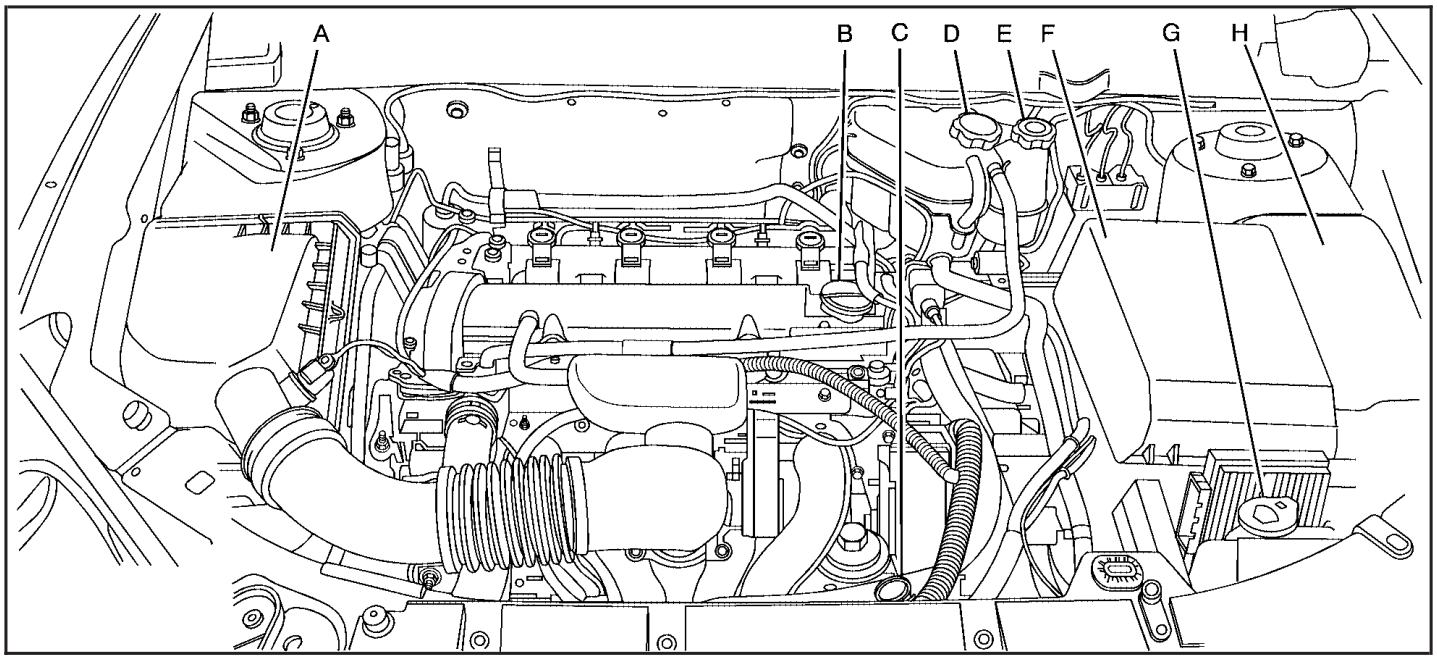

Downloaded from www.Manualslib.com manuals search engine

A. Engine Air Cleaner/Filter. See *Engine Air Cleaner/Filter on page 5-22*.

B. Engine Oil Fill Cap. See “When to Add Engine Oil” under *Engine Oil on page 5-17*.

C. Engine Oil Dipstick. See “Checking Engine Oil” under *Engine Oil on page 5-17*.

D. Engine Coolant Reservoir. See *Engine Coolant on page 5-27*.

E. Brake Fluid Reservoir. See “Brake Fluid” under *Brakes on page 5-39*.

F. Battery. See *Battery on page 5-42*.

G. Windshield Washer Fluid Reservoir. See “Adding Washer Fluid” under *Windshield Washer Fluid on page 5-38*.

H. Engine Compartment Fuse Block. See *Engine Compartment Fuse Block on page 5-100*.

Downloaded from www.Manualslib.com manuals search engine

When you open the hood on the 3.5L LX9 engine, here is what you will see:

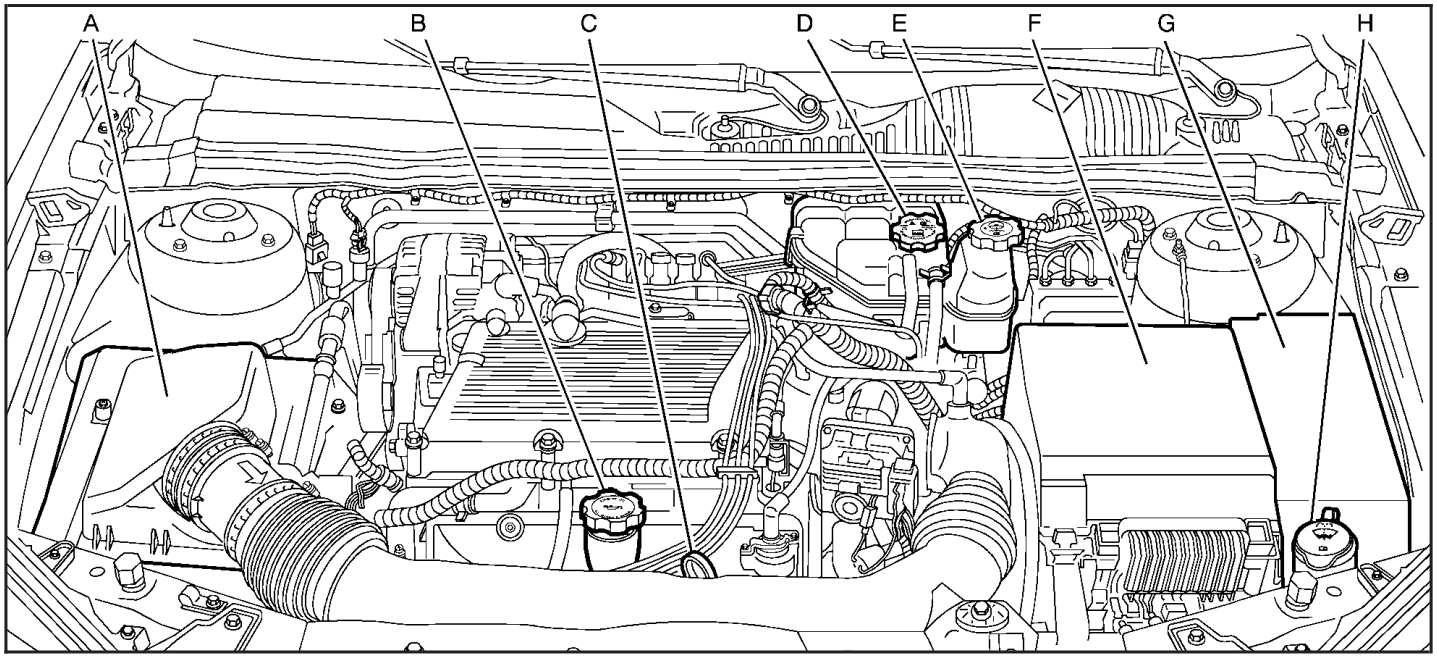

Downloaded from www.Manualslib.com manuals search engine

A. Engine Air Cleaner/Filter. See *Engine Air Cleaner/Filter on page 5-22*.

B. Engine Oil Fill Cap. See “When to Add Engine Oil” under *Engine Oil on page 5-17*.

C. Engine Oil Dipstick. See “Checking Engine Oil” under *Engine Oil on page 5-17*.

D. Engine Coolant Reservoir. See *Engine Coolant on page 5-27*.

E. Brake Fluid Reservoir. See “Brake Fluid” under *Brakes on page 5-39*.

F. Battery. See *Battery on page 5-42*.

G. Engine Compartment Fuse Block. See *Engine Compartment Fuse Block on page 5-100*.

H. Windshield Washer Fluid Reservoir. See “Adding Washer Fluid” under *Windshield Washer Fluid on page 5-38*.

Downloaded from www.Manualslib.com manuals search engine

When you open the hood on the 3.9L LZ9 engine, here is what you will see:

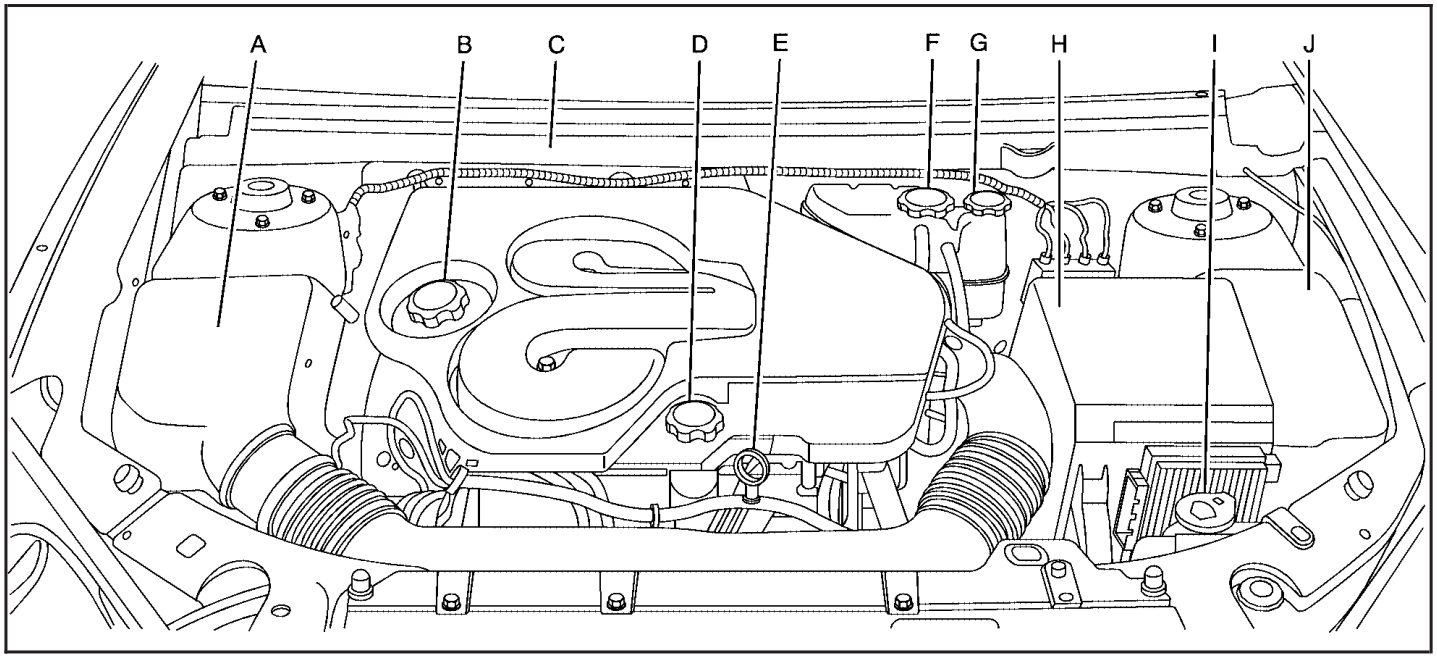

Downloaded from www.Manualslib.com manuals search engine

A. Engine Air Cleaner/Filter. See *Engine Air Cleaner/Filter on page 5-22*.

B. Power Steering Fluid Reservoir. See *Power Steering Fluid on page 5-37*.

C. Automatic Transaxle Fluid Dipstick (out of view). See "Checking the Fluid Level" under *Automatic Transaxle Fluid (2.4L LE5 and 3.5L LX9 Engines) on page 5-23* or *Automatic Transaxle Fluid (3.9L LZ9 Engine) on page 5-24*.

D. Engine Oil Fill Cap. See "When to Add Engine Oil" under *Engine Oil on page 5-17*.

E. Engine Oil Dipstick. See "Checking Engine Oil" under *Engine Oil on page 5-17*.

F. Engine Coolant Reservoir. See *Engine Coolant on page 5-27*.

G. Brake Fluid Reservoir. See "Brake Fluid" under *Brakes on page 5-39*.

H. Battery. See *Battery on page 5-42*.

I. Windshield Washer Fluid Reservoir. See "Adding Washer Fluid" under *Windshield Washer Fluid on page 5-38*.

J. Engine Compartment Fuse Block. See *Engine Compartment Fuse Block on page 5-100*.

Engine Oil

Checking Engine Oil

It is a good idea to check your engine oil every time you get fuel. In order to get an accurate reading, the oil must be warm and the vehicle must be on level ground.

The engine oil dipstick handle is a yellow loop. See *Engine Compartment Overview on page 5-12* for the location of the engine oil dipstick.

1. Turn off the engine and give the oil several minutes to drain back into the oil pan. If you do not do this, the oil dipstick might not show the actual level.
2. Pull out the dipstick and clean it with a paper towel or cloth, then push it back in all the way. Remove it again, keeping the tip down, and check the level.

Downloaded from www.Manualslib.com manuals search engine

When to Add Engine Oil

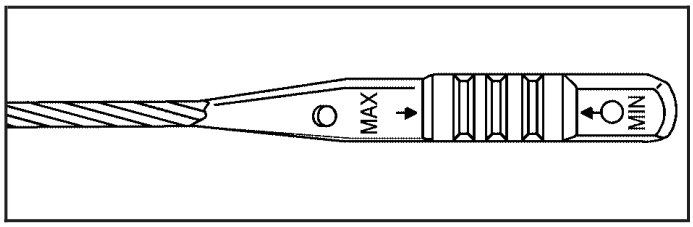

L4 Engine

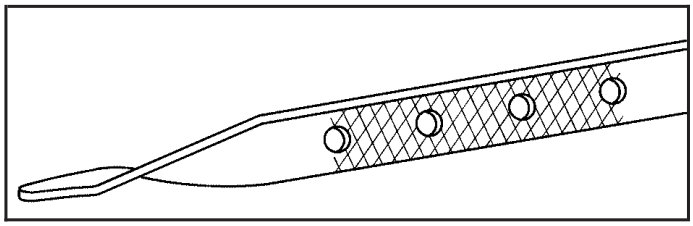

V6 Engine

If the oil is below the cross-hatched area at the tip of the dipstick, you will need to add at least one quart/liter of oil. But you must use the right kind. This section explains what kind of oil to use. For engine oil crankcase capacity, see *Capacities and Specifications on page 5-105*.

Notice: **Do not add too much oil. If your engine has so much oil that the oil level gets above the upper mark that shows the proper operating range, your engine could be damaged.**

See *Engine Compartment Overview on page 5-12* for the location of the engine oil fill cap.

Be sure to add enough oil to put the level somewhere in the proper operating range. Push the dipstick all the way back in when you are through.

Downloaded from www.Manualslib.com manuals search engine

What Kind of Engine Oil to Use

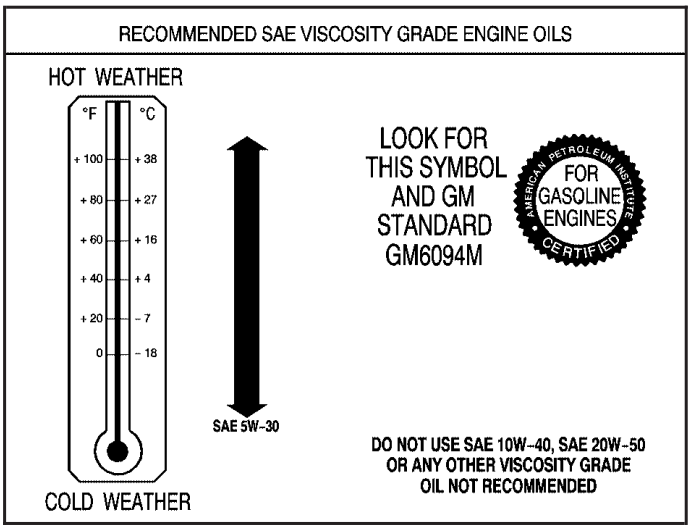

Look for two things:

- GM6094M

  Your vehicle's engine requires oil meeting GM Standard GM6094M. You should look for and use only an oil that meets GM Standard GM6094M.

- SAE 5W-30

  As shown in the viscosity chart, SAE 5W-30 is best for your vehicle.

  These numbers on an oil container show its viscosity, or thickness. Do not use other viscosity oils such as SAE 20W-50.

Oils meeting these requirements should also have the starburst symbol on the container. This symbol indicates that the oil has been certified by the American Petroleum Institute (API).

You should look for this information on the oil container, and use *only* those oils that are identified as meeting GM Standard GM6094M and have the starburst symbol on the front of the oil container.

Notice: **Use only engine oil identified as meeting GM Standard GM6094M and showing the American Petroleum Institute Certified For Gasoline Engines starburst symbol. Failure to use the recommended oil can result in engine damage not covered by your warranty.**

Downloaded from www.Manualslib.com manuals search engine

GM Goodwrench® oil meets all the requirements for your vehicle.

If you are in an area of extreme cold, where the temperature falls below –20°F (–29°C), it is recommended that you use either an SAE 5W-30 synthetic oil or an SAE 0W-30 oil. Both will provide easier cold starting and better protection for your engine at extremely low temperatures.

Engine Oil Additives

Do not add anything to your oil. The recommended oils with the starburst symbol that meet GM Standard GM6094M are all you will need for good performance and engine protection.

Engine Oil Life System

When to Change Engine Oil

Your vehicle has a computer system that lets you know when to change the engine oil and filter. This is based on engine revolutions and engine temperature, and not on mileage. Based on driving conditions, the mileage at which an oil change will be indicated can vary considerably. For the oil life system to work properly, you must reset the system every time the oil is changed.

When the system has calculated that oil life has been diminished, it will indicate that an oil change is necessary. A CHANGE OIL SOON message will come on. See *DIC Warnings and Messages on page 3-48*. Change your oil as soon as possible within the next 600 miles (1 000 km). It is possible that, if you are driving under the best conditions, the oil life system may not indicate that an oil change is necessary for over a year. However, your engine oil and filter must be changed at least once a year and at this time the system must be reset. Your dealer has GM-trained service people who will perform this work using genuine GM parts and reset the system. It is also important to check your oil regularly and keep it at the proper level.

If the system is ever reset accidentally, you must change your oil at 3,000 miles (5 000 km) since your last oil change. Remember to reset the oil life system whenever the oil is changed.

How to Reset the Engine Oil Life System

The Engine Oil Life System calculates when to change your engine oil and filter based on vehicle use. Anytime your oil is changed, reset the system so it can calculate when the next oil change is required. If a situation occurs where you change your oil prior to a CHANGE OIL SOON message being turned on, reset the system.

Downloaded from www.Manualslib.com manuals search engine

After changing the engine oil and filter, the system must be reset. To reset the oil life system, use the following procedure:

1. With the CHANGE OIL SOON message displayed, press any of the three DIC buttons to clear the CHANGE OIL SOON message. See *DIC Warnings and Messages on page 3-48*.
2. Display OIL LIFE RESET on the DIC.
3. Press and hold the ENTER button for at least one second. An ACKNOWLEDGED display message will appear for three seconds or until the next button is pressed. This will tell you the system has been reset. See *DIC Vehicle Personalization on page 3-52*.
4. Turn the ignition to OFF.

If the CHANGE OIL SOON message comes back on when you start your vehicle, the engine oil life system has not reset. Repeat the procedure.

What to Do with Used Oil

Used engine oil contains certain elements that may be unhealthy for your skin and could even cause cancer. Do not let used oil stay on your skin for very long. Clean your skin and nails with soap and water, or a good hand cleaner. Wash or properly dispose of clothing or rags containing used engine oil. See the manufacturer's warnings about the use and disposal of oil products.

Used oil can be a threat to the environment. If you change your own oil, be sure to drain all the oil from the filter before disposal. Never dispose of oil by putting it in the trash, pouring it on the ground, into sewers, or into streams or bodies of water. Instead, recycle it by taking it to a place that collects used oil. If you have a problem properly disposing of your used oil, ask your dealer, a service station or a local recycling center for help.

Downloaded from www.Manualslib.com manuals search engine

Engine Air Cleaner/Filter

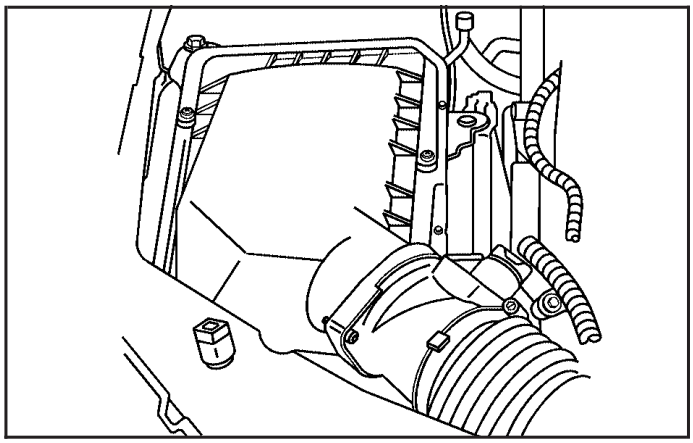

See *Engine Compartment Overview on page 5-12* for the location of the engine air cleaner/filter.

When to Inspect the Engine Air Cleaner/Filter

Inspect the air cleaner/filter at the Maintenance II intervals and replace it at the first oil change after each 50,000 mile (83 000 km) interval. See *Scheduled Maintenance on page 6-4* for more information. If you are driving in dusty/dirty conditions, inspect the filter at each engine oil change.

How to Inspect the Engine Air Cleaner/Filter

To inspect the air cleaner/filter, remove the filter from the vehicle and lightly shake the filter to release loose dust and dirt. If the filter remains caked with dirt, a new filter is required.

To inspect or replace the engine air cleaner/filter, do the following:

1. Remove the screws that hold the cover on.
2. Disconnect the electrical connector.
3. Lift off the cover.
4. Inspect or replace the engine air cleaner/filter.
5. Reverse Steps 1 through 3 to reinstall the cover and reconnect the electrical connector.

Downloaded from www.Manualslib.com manuals search engine

⚠ CAUTION:

Operating the engine with the air cleaner/filter off can cause you or others to be burned. The air cleaner not only cleans the air; it helps to stop flames if the engine backfires. If it is not there and the engine backfires, you could be burned. Do not drive with it off, and be careful working on the engine with the air cleaner/filter off.

Notice: **If the air cleaner/filter is off, a backfire can cause a damaging engine fire. And, dirt can easily get into your engine, which will damage it. Always have the air cleaner/filter in place when you are driving.**

Automatic Transaxle Fluid (2.4L LE5 and 3.5L LX9 Engines)

It is not necessary to check the transaxle fluid level. A transaxle fluid leak is the only reason for fluid loss. If a leak occurs, take your vehicle to the dealership service department and have it repaired as soon as possible.

Change the fluid and filter at the intervals listed in *Additional Required Services on page 6-6*, and be sure to use the transaxle fluid listed in *Recommended Fluids and Lubricants on page 6-12*.

Notice: **Use of the incorrect automatic transaxle fluid may damage your vehicle, and the damages may not be covered by your warranty. Always use the automatic transaxle fluid listed in *Recommended Fluids and Lubricants on page 6-12*.**

Downloaded from www.Manualslib.com manuals search engine

Automatic Transaxle Fluid (3.9L LZ9 Engine)

When to Check and Change Automatic Transaxle Fluid

A good time to check the automatic transaxle fluid level is when the engine oil is changed.

Change the fluid and filter at the intervals listed in *Additional Required Services on page 6-6*, and be sure to use the transaxle fluid listed in *Recommended Fluids and Lubricants on page 6-12*.

How to Check Automatic Transaxle Fluid

Because this operation can be a little difficult, you may choose to have this done at the dealership service department.

If you do it yourself, be sure to follow all the instructions here, or you could get a false reading on the dipstick.

Notice: **Too much or too little fluid can damage the transaxle. Too much can mean that some of the fluid could come out and fall on hot engine or exhaust system parts, starting a fire. Too little fluid could cause the transaxle to overheat. Be sure to get an accurate reading if you check the transaxle fluid.**

Wait at least 30 minutes before checking the transaxle fluid level if you have been driving:

- When outside temperatures are above 90°F (32°C).
- At high speed for quite a while.
- In heavy traffic — especially in hot weather.
- While pulling a trailer.

To get the right reading, the fluid should be at normal operating temperature, which is 180°F to 200°F (82°C to 93°C).

Get the vehicle warmed up by driving about 15 miles (24 km) when outside temperatures are above 50°F (10°C). If it is colder than 50°F (10°C), you may have to drive longer.

Checking the Fluid Level

Prepare the vehicle as follows:

- Park the vehicle on a level place. Keep the engine running.
- With the parking brake applied, place the shift lever in PARK (P).
- With your foot on the brake pedal, move the shift lever through each gear, pausing for about three seconds in each one. Then, position the shift lever in PARK (P).
- Let the engine run at idle for three to five minutes.

Downloaded from www.Manualslib.com manuals search engine

Then, without shutting off the engine, follow these steps:

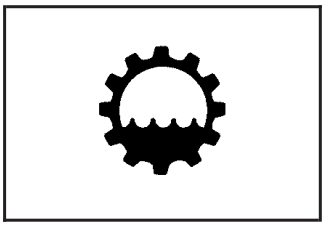

The transaxle fluid dipstick handle has this symbol on it, and is located near the rear of the engine compartment. See *Engine Compartment Overview on page 5-12* for more information on location.

1. Pull out the dipstick and wipe it with a clean rag or paper towel.
2. Push it back in all the way, wait three seconds and then pull it back out again.

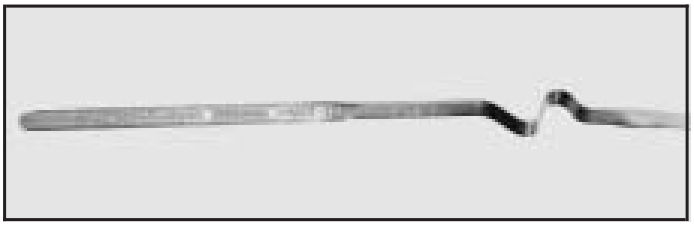

3. Check both sides of the dipstick, and read the lower level. The fluid level must be in the crosshatched area.
4. If the fluid level is in the acceptable range, push the dipstick back in all the way.

How to Add Automatic Transaxle Fluid

Refer to the Maintenance Schedule to determine what kind of transaxle fluid to use. See *Recommended Fluids and Lubricants on page 6-12*.

If the fluid level is low, add only enough of the proper fluid to bring the level into the crosshatched area on the dipstick.

1. Pull out the dipstick.
2. Using a long-neck funnel, add enough fluid at the dipstick hole to bring it to the proper level.

   It does not take much fluid, generally less than one pint (0.5 L). Do not overfill.

Notice: **Use of the incorrect automatic transaxle fluid may damage your vehicle, and the damages may not be covered by your warranty. Always use the automatic transaxle fluid listed in *Recommended Fluids and Lubricants on page 6-12*.**

3. After adding fluid, recheck the fluid level as described under “How to Check Automatic Transaxle Fluid,” earlier in this section.
4. When the correct fluid level is obtained, push the dipstick back in all the way.

Downloaded from www.Manualslib.com manuals search engine

Manual Transaxle Fluid

It is not necessary to check the transaxle fluid level. A transaxle fluid leak is the only reason for fluid loss. If a leak occurs, take the vehicle to the dealership service department and have it repaired as soon as possible. See *Recommended Fluids and Lubricants on page 6-12* for the proper fluid to use.

Hydraulic Clutch

The hydraulic clutch linkage in your vehicle is self-adjusting. The master cylinder reservoir is filled with hydraulic fluid.

It is not necessary to regularly check the fluid unless you suspect there is a leak in the system. Adding fluid will not correct a leak.

A fluid loss in this system could indicate a problem. Have the system inspected and repaired.

When to Check and What to Use

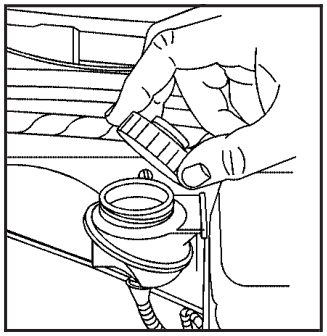

Refer to the Maintenance Schedule to determine how often you should check the fluid level in your master cylinder reservoir and for the proper fluid. See *Owner Checks and Services on page 6-8* and *Recommended Fluids and Lubricants on page 6-12*.

How to Check and Add Fluid

You do not need to check the fluid level unless you suspect a clutch problem. To check the fluid level, take the cap off. If the fluid reaches the step inside the reservoir, the fluid level is correct. See *Engine Compartment Overview on page 5-12* for more information on location.

Downloaded from www.Manualslib.com manuals search engine

Engine Coolant

The cooling system in your vehicle is filled with DEX-COOL® engine coolant. This coolant is designed to remain in your vehicle for five years or 150,000 miles (240 000 km), whichever occurs first, if you add only DEX-COOL® extended life coolant.

The following explains your cooling system and how to add coolant when it is low. If you have a problem with engine overheating, see *Engine Overheating on page 5-30*.

A 50/50 mixture of clean, drinkable water and DEX-COOL® coolant will:

- Give freezing protection down to –34°F (–37°C).
- Give boiling protection up to 265°F (129°C).
- Protect against rust and corrosion.
- Help keep the proper engine temperature.
- Let the warning lights and gages work as they should.

Notice: **Using coolant other than DEX-COOL® may cause premature engine, heater core, or radiator corrosion. In addition, the engine coolant may require changing sooner, at the first maintenance service after each 25,000 miles (41 500 km) or 24 months, whichever occurs first. Any repairs would not be covered by your warranty. Always use DEX-COOL® (silicate-free) coolant in your vehicle.**

Downloaded from www.Manualslib.com manuals search engine

What to Use

Use a mixture of one-half clean, drinkable water and one-half DEX-COOL® coolant which will not damage aluminum parts. If you use this coolant mixture, you do not need to add anything else.

⚠ CAUTION:

Adding only plain water to your cooling system can be dangerous. Plain water, or some other liquid such as alcohol, can boil before the proper coolant mixture will. Your vehicle's coolant warning system is set for the proper coolant mixture. With plain water or the wrong mixture, your engine could get too hot but you would not get the overheat warning. Your engine could catch fire and you or others could be burned. Use a 50/50 mixture of clean, drinkable water and DEX-COOL® coolant.

Notice: **If you use an improper coolant mixture, your engine could overheat and be badly damaged. The repair cost would not be covered by your warranty. Too much water in the mixture can freeze and crack the engine, radiator, heater core and other parts.**

If you have to add coolant more than four times a year, have your dealer check your cooling system.

Notice: **If you use the proper coolant, you do not have to add extra inhibitors or additives which claim to improve the system. These can be harmful.**

Downloaded from www.Manualslib.com manuals search engine

Checking Coolant

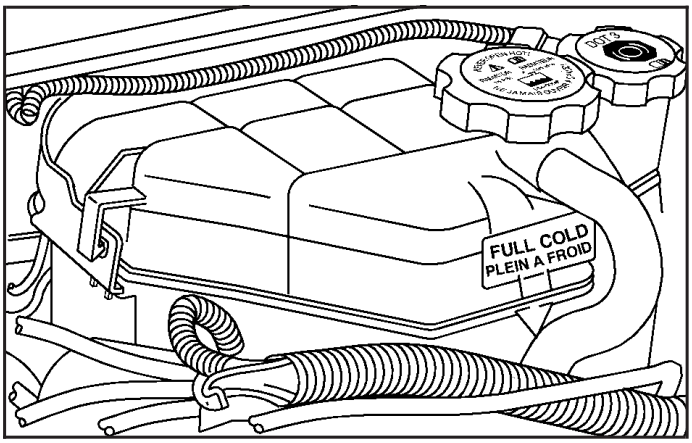

The engine coolant surge tank is located in the rear of the engine compartment. See *Engine Compartment Overview on page 5-12* for more information on location.

⚠ CAUTION:

Turning the surge tank pressure cap when the engine and radiator are hot can allow steam and scalding liquids to blow out and burn you badly. Never turn the surge tank pressure cap — even a little — when the engine and radiator are hot.

The vehicle must be on a level surface. When your engine is cold, the coolant level should be at the FULL COLD mark or slightly higher.

If the LOW COOLANT message is displayed in the Driver Information Center (DIC), it means you are low on engine coolant. Have the system serviced by a technician as soon as possible. See *DIC Warnings and Messages on page 3-48* for more information.

Downloaded from www.Manualslib.com manuals search engine

Adding Coolant

If you need more coolant, add the proper DEX-COOL® coolant mixture at the surge tank, but only when the engine is cool. If the surge tank is empty, a special fill procedure is necessary. See *Engine Overheating on page 5-30* and *Cooling System on page 5-32*.

⚠ CAUTION:

You can be burned if you spill coolant on hot engine parts. Coolant contains ethylene glycol, and it will burn if the engine parts are hot enough. Do not spill coolant on a hot engine.

When replacing the pressure cap, make sure it is hand-tight and fully seated.

Coolant Surge Tank Pressure Cap

Notice: **If the pressure cap is not tightly installed, coolant loss and possible engine damage may occur. Be sure the cap is properly and tightly secured.**

Engine Overheating

You will find an engine coolant temperature gage on your vehicle's instrument panel. See *Engine Coolant Temperature Gage on page 3-40*.

In addition, you will find a LOW COOLANT message displayed in the Driver Information Center (DIC). See *DIC Warnings and Messages on page 3-48*.

Downloaded from www.Manualslib.com manuals search engine

If Steam Is Coming From Your Engine

⚠ CAUTION:

Steam from an overheated engine can burn you badly, even if you just open the hood. Stay away from the engine if you see or hear steam coming from it. Just turn it off and get everyone away from the vehicle until it cools down. Wait until there is no sign of steam or coolant before you open the hood.

If you keep driving when your engine is overheated, the liquids in it can catch fire. You or others could be badly burned. Stop your engine if it overheats, and get out of the vehicle until the engine is cool.

Notice: **If your engine catches fire because you keep driving with no coolant, your vehicle can be badly damaged. The costly repairs would not be covered by your warranty.**

If No Steam Is Coming From Your Engine

If you get an engine overheat warning, but see or hear no steam, the problem may not be too serious. Sometimes the engine can get a little too hot when you:

- Climb a long hill on a hot day.
- Stop after high-speed driving.
- Idle for long periods in traffic.
- Tow a trailer.

If you get the overheat warning with no sign of steam, try this for a minute or so:

1. In heavy traffic, let the engine idle in NEUTRAL (N) while stopped. If it is safe to do so, pull off the road, shift to PARK (P) or NEUTRAL (N) and let the engine idle.
2. Turn on your heater to full hot at the highest fan speed and open the windows as necessary.

If you no longer have the overheat warning, you can drive. Just to be safe, drive slower for about 10 minutes. If the warning does not come back on, you can drive normally.

If the warning continues, pull over, stop, and park your vehicle right away.

Downloaded from www.Manualslib.com manuals search engine

If there is still no sign of steam, idle the engine for three minutes while you are parked. If you still have the warning, turn off the engine and get everyone out of the vehicle until it cools down.

You may decide not to lift the hood but to get service help right away.

Overheated Engine Protection Operating Mode

This emergency operating mode allows your vehicle to be driven to a safe place in an emergency situation. If an overheated engine condition exists, an overheat protection mode which alternates firing groups of cylinders helps prevent engine damage. In this mode, you will notice a significant loss in power and engine performance. The temperature gage will indicate an overheat condition exists. Driving extended miles (km) and/or towing a trailer in the overheat protection mode should be avoided.

Notice: **After driving in the overheated engine protection operating mode, to avoid engine damage, allow the engine to cool before attempting any repair. The engine oil will be severely degraded. Repair the cause of coolant loss, change the oil and reset the oil life system. See *Engine Oil on page 5-17*.**

Cooling System

When you decide it is safe to lift the hood, here is what you will see:

3.5L LX9 Engine shown, 2.4L LE5 and 3.9L LZ9 Engines similar

A. Engine Cooling Fans

B. Engine Coolant Reservoir

Downloaded from www.Manualslib.com manuals search engine

⚠ CAUTION:

An electric engine cooling fan under the hood can start up even when the engine is not running and can injure you. Keep hands, clothing and tools away from any underhood electric fan.

If the coolant inside the coolant surge tank is boiling, do not do anything else until it cools down. The vehicle should be parked on a level surface.

The coolant level should be at or above the FULL COLD mark on the coolant surge tank. If it is not, you may have a leak at the pressure cap or in the radiator hoses, heater hoses, radiator, water pump, or somewhere else in the cooling system.

⚠ CAUTION:

Heater and radiator hoses, and other engine parts, can be very hot. Do not touch them. If you do, you can be burned.

Do not run the engine if there is a leak. If you run the engine, it could lose all coolant. That could cause an engine fire, and you could be burned. Get any leak fixed before you drive the vehicle.

If there seems to be no leak, with the engine on, check to see if the electric engine cooling fans are running. If the engine is overheating, both fans should be running. If they are not, your vehicle needs service.

Notice: **Engine damage from running your engine without coolant is not covered by your warranty.**

Notice: **Using coolant other than DEX-COOL® may cause premature engine, heater core or radiator corrosion. In addition, the engine coolant may require changing sooner, at 30,000 miles (50 000 km) or 24 months, whichever occurs first. Any repairs would not be covered by your warranty. Always use DEX-COOL® (silicate-free) coolant in your vehicle.**

Downloaded from www.Manualslib.com manuals search engine

How to Add Coolant to the Coolant Surge Tank

Notice: **This vehicle has a specific coolant fill procedure. Failure to follow this procedure could cause your engine to overheat and be severely damaged.**

If you have not found a problem yet, check to see if coolant is visible in the surge tank. If coolant is visible but the coolant level is not at or above the FULL COLD mark, add a 50/50 mixture of clean, drinkable water and DEX-COOL® coolant at the coolant surge tank, but be sure the cooling system, including the coolant surge tank pressure cap, is cool before you do it. See *Engine Coolant on page 5-27* for more information.

If no coolant is visible in the surge tank, add coolant as follows:

⚠ CAUTION:

Steam and scalding liquids from a hot cooling system can blow out and burn you badly. They are under pressure, and if you turn the coolant surge tank pressure cap — even a little — they can come out at high speed. Never turn the cap when the cooling system, including the coolant surge tank pressure cap, is hot. Wait for the cooling system and coolant surge tank pressure cap to cool if you ever have to turn the pressure cap.

Downloaded from www.Manualslib.com manuals search engine

⚠ CAUTION:

Adding only plain water to your cooling system can be dangerous. Plain water, or some other liquid such as alcohol, can boil before the proper coolant mixture will. Your vehicle's coolant warning system is set for the proper coolant mixture. With plain water or the wrong mixture, your engine could get too hot but you would not get the overheat warning. Your engine could catch fire and you or others could be burned. Use a 50/50 mixture of clean, drinkable water and DEX-COOL® coolant.

Notice: **In cold weather, water can freeze and crack the engine, radiator, heater core and other parts. Use the recommended coolant and the proper coolant mixture.**

⚠ CAUTION:

You can be burned if you spill coolant on hot engine parts. Coolant contains ethylene glycol and it will burn if the engine parts are hot enough. Do not spill coolant on a hot engine.

1. You can remove the coolant surge tank pressure cap when the cooling system, including the coolant surge tank pressure cap and upper radiator hose, is no longer hot. Turn the pressure cap slowly counterclockwise about two or two and one-half turns.

   If you hear a hiss, wait for that to stop. This will allow any pressure still left to be vented out the discharge hose.

Downloaded from www.Manualslib.com manuals search engine

2. Then keep turning the pressure cap slowly, and remove it.

3. Fill the coolant surge tank with the proper mixture, to the FULL COLD mark. Wait about five minutes, then check to see if the level is below the mark. If the level is below the FULL COLD mark, add additional coolant to bring the level up to the mark. Repeat this procedure until the level remains constant at the FULL COLD mark for at least five minutes.

4. With the coolant surge tank pressure cap off, start the engine and let it run until you can feel the upper radiator hose getting hot. Watch out for the engine cooling fans.

   By this time, the coolant level inside the coolant surge tank may be lower. If the level is lower than the FULL COLD mark, add more of the proper mixture to the coolant surge tank until the level reaches the FULL COLD mark.

5. Then replace the pressure cap. Be sure the pressure cap is hand-tight and fully seated.

Downloaded from www.Manualslib.com manuals search engine

Power Steering Fluid

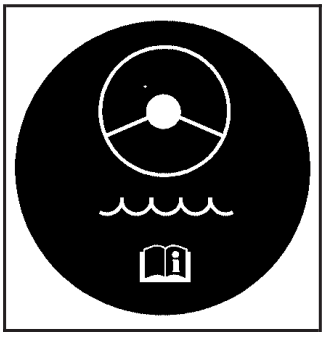

See *Engine Compartment Overview on page 5-12* for reservoir location.

When to Check Power Steering Fluid

It is not necessary to regularly check power steering fluid unless a leak is suspected in the system, or an unusual noise is heard. A fluid loss in this system could indicate a problem. Have the system inspected and repaired.

How to Check Power Steering Fluid

To check the power steering fluid, do the following:

1. Turn the key off and let the engine compartment cool down.
2. Wipe the cap and the top of the reservoir clean.
3. Unscrew the cap and wipe the dipstick with a clean rag.
4. Replace the cap and completely tighten it.
5. Remove the cap again and look at the fluid level on the dipstick

The fluid level should be within the crosshatched area on the dipstick.

If the fluid is at or below the ADD mark on the dipstick, add just enough fluid to bring the level within the crosshatched area.

What to Use

To determine what kind of fluid to use, see *Recommended Fluids and Lubricants on page 6-12*. Always use the proper fluid. Failure to use the proper fluid can cause leaks and damage hoses and seals.

Downloaded from www.Manualslib.com manuals search engine

Windshield Washer Fluid

What to Use

When you need windshield washer fluid, be sure to read the manufacturer's instructions before use. If you will be operating your vehicle in an area where the temperature may fall below freezing, use a fluid that has sufficient protection against freezing.

Adding Washer Fluid

When the windshield washer fluid reservoir is low, a LOW WASHER FLUID message will be displayed on the Driver Information Center (DIC). See *DIC Warnings and Messages on page 3-48* for more information.

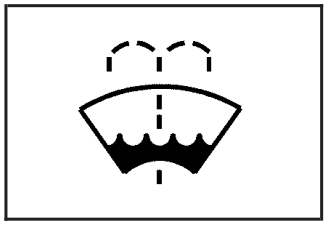

Open the cap with the washer symbol on it. Add washer fluid until the tank is full. See *Engine Compartment Overview on page 5-12* for reservoir location.

Notice:

- **When using concentrated washer fluid, follow the manufacturer's instructions for adding water.**
- **Do not mix water with ready-to-use washer fluid. Water can cause the solution to freeze and damage your washer fluid tank and other parts of the washer system. Also, water does not clean as well as washer fluid.**
- **Fill your washer fluid tank only three-quarters full when it is very cold. This allows for expansion if freezing occurs, which could damage the tank if it is completely full.**
- **Do not use engine coolant (antifreeze) in your windshield washer. It can damage your washer system and paint.**

Downloaded from www.Manualslib.com manuals search engine

Brakes

Brake Fluid

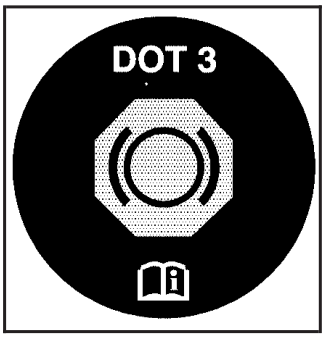

Your brake master cylinder reservoir is filled with DOT-3 brake fluid. See *Engine Compartment Overview on page 5-12* for the location of the reservoir.

There are only two reasons why the brake fluid level in the reservoir might go down. The first is that the brake fluid goes down to an acceptable level during normal brake lining wear. When new linings are put in, the fluid level goes back up. The other reason is that fluid is leaking out of the brake system. If it is, you should have your brake system fixed, since a leak means that sooner or later your brakes will not work well, or will not work at all.

So, it is not a good idea to top off your brake fluid. Adding brake fluid will not correct a leak. If you add fluid when your linings are worn, then you will have too much fluid when you get new brake linings. You should add or remove brake fluid, as necessary, only when work is done on the brake hydraulic system.

⚠ CAUTION:

If you have too much brake fluid, it can spill on the engine. The fluid will burn if the engine is hot enough. You or others could be burned, and your vehicle could be damaged. Add brake fluid only when work is done on the brake hydraulic system.

When your brake fluid falls to a low level, the BRAKE FLUID message in the Driver Information Center (DIC) will come on. See *DIC Warnings and Messages on page 3-48*.

Downloaded from www.Manualslib.com manuals search engine

What to Add

When you do need brake fluid, use only DOT-3 brake fluid. Use new brake fluid from a sealed container only. See *Recommended Fluids and Lubricants on page 6-12*.

Always clean the brake fluid reservoir cap and the area around the cap before removing it. This will help keep dirt from entering the reservoir.

⚠ CAUTION:

With the wrong kind of fluid in your brake system, your brakes may not work well, or they may not even work at all. This could cause a crash. Always use the proper brake fluid.

Notice:

- **Using the wrong fluid can badly damage brake system parts. For example, just a few drops of mineral-based oil, such as engine oil, in your brake system can damage brake system parts so badly that they will have to be replaced. Do not let someone put in the wrong kind of fluid.**
- **If you spill brake fluid on your vehicle's painted surfaces, the paint finish can be damaged. Be careful not to spill brake fluid on your vehicle. If you do, wash it off immediately. See *Appearance Care on page 5-87*.**

Brake Wear

Your vehicle has four-wheel disc brakes.

Disc brake pads have built-in wear indicators that make a high-pitched warning sound when the brake pads are worn and new pads are needed. The sound may come and go or be heard all the time your vehicle is moving, except when you are pushing on the brake pedal firmly.

Downloaded from www.Manualslib.com manuals search engine

⚠ CAUTION:

The brake wear warning sound means that soon your brakes will not work well. That could lead to an accident. When you hear the brake wear warning sound, have your vehicle serviced.

Notice: **Continuing to drive with worn-out brake pads could result in costly brake repair.**

Some driving conditions or climates may cause a brake squeal when the brakes are first applied or lightly applied. This does not mean something is wrong with your brakes.

Properly torqued wheel nuts are necessary to help prevent brake pulsation. When tires are rotated, inspect brake pads for wear and evenly tighten wheel nuts in the proper sequence to GM torque specifications.

Brake linings should always be replaced as complete axle sets.

Brake Pedal Travel

See your dealer if the brake pedal does not return to normal height, or if there is a rapid increase in pedal travel. This could be a sign of brake trouble.

Brake Adjustment

Every time you apply the brakes, with or without the vehicle moving, your brakes adjust for wear.

Replacing Brake System Parts

The braking system on a vehicle is complex. Its many parts have to be of top quality and work well together if the vehicle is to have really good braking. Your vehicle was designed and tested with top-quality GM brake parts. When you replace parts of your braking system — for example, when your brake linings wear down and you need new ones put in — be sure you get new approved GM replacement parts. If you do not, your brakes may no longer work properly. For example, if someone puts in brake linings that are wrong for your vehicle, the balance between your front and rear brakes can change — for the worse. The braking performance you have come to expect can change in many other ways if someone puts in the wrong replacement brake parts.

Downloaded from www.Manualslib.com manuals search engine

Battery

Your vehicle has a maintenance free battery. When it is time for a new battery, get one that has the replacement number shown on the original battery's label. We recommend an ACDelco® replacement battery. See *Engine Compartment Overview on page 5-12* for battery location.

Warning: Battery posts, terminals, and related accessories contain lead and lead compounds, chemicals known to the State of California to cause cancer and reproductive harm. Wash hands after handling.

Vehicle Storage

If you are not going to drive your vehicle for 25 days or more, remove the black, negative (–) cable from the battery. This will help keep your battery from running down.

⚠ CAUTION:

Batteries have acid that can burn you and gas that can explode. You can be badly hurt if you are not careful. See *Jump Starting on page 5-42* for tips on working around a battery without getting hurt.

Jump Starting

If your vehicle's battery has run down, you may want to use another vehicle and some jumper cables to start your vehicle. Be sure to use the following steps to do it safely.

Downloaded from www.Manualslib.com manuals search engine

⚠ CAUTION:

Batteries can hurt you. They can be dangerous because:

- **They contain acid that can burn you.**
- **They contain gas that can explode or ignite.**
- **They contain enough electricity to burn you.**

If you do not follow these steps exactly, some or all of these things can hurt you.

Notice: **Ignoring these steps could result in costly damage to your vehicle that would not be covered by your warranty.**

Trying to start your vehicle by pushing or pulling it will not work, and it could damage your vehicle.

1. Check the other vehicle. It must have a 12-volt battery with a negative ground system.

Notice: **If the other vehicle's system is not a 12-volt system with a negative ground, both vehicles can be damaged. Only use vehicles with 12-volt systems with negative grounds to jump start your vehicle.**

2. Get the vehicles close enough so the jumper cables can reach, but be sure the vehicles are not touching each other. If they are, it could cause a ground connection you do not want. You would not be able to start your vehicle, and the bad grounding could damage the electrical systems.

   To avoid the possibility of the vehicles rolling, set the parking brake firmly on both vehicles involved in the jump start procedure. Put an automatic transaxle in PARK (P) or a manual transaxle in NEUTRAL before setting the parking brake.

Notice: **If you leave your radio or other accessories on during the jump starting procedure, they could be damaged. The repairs would not be covered by your warranty. Always turn off your radio and other accessories when jump starting your vehicle.**

3. Turn off the ignition on both vehicles. Unplug unnecessary accessories plugged into the cigarette lighter or the accessory power outlet. Turn off the radio and all lamps that are not needed. This will avoid sparks and help save both batteries. And it could save the radio!

Downloaded from www.Manualslib.com manuals search engine

4. Open the hoods and locate the batteries. Find the positive (+) and negative (–) terminal locations on each vehicle. See *Engine Compartment Overview on page 5-12* for more information on location.

⚠ CAUTION:

An electric fan can start up even when the engine is not running and can injure you. Keep hands, clothing and tools away from any underhood electric fan.

⚠ CAUTION:

Using a match near a battery can cause battery gas to explode. People have been hurt doing this, and some have been blinded. Use a flashlight if you need more light.

Be sure the battery has enough water. You do not need to add water to the battery installed in your new vehicle. But if a battery has filler caps, be sure the right amount of fluid is there. If it is low, add water to take care of that first. If you do not, explosive gas could be present.

Battery fluid contains acid that can burn you. Do not get it on you. If you accidentally get it in your eyes or on your skin, flush the place with water and get medical help immediately.

Downloaded from www.Manualslib.com manuals search engine

5. Check that the jumper cables do not have loose or missing insulation. If they do, you could get a shock. The vehicles could be damaged too.

   Before you connect the cables, here are some things you should know. Positive (+) will go to positive (+) or to a remote positive (+) terminal if the vehicle has one. Negative (–) will go to a heavy, unpainted metal engine part or to a remote negative (–) terminal if the vehicle has one.

   Do not connect positive (+) to negative (–) or you will get a short that would damage the battery and maybe other parts too. And do not connect the negative (–) cable to the negative (–) terminal on the dead battery because this can cause sparks.

⚠ CAUTION:

Fans or other moving engine parts can injure you badly. Keep your hands away from moving parts once the engine is running.

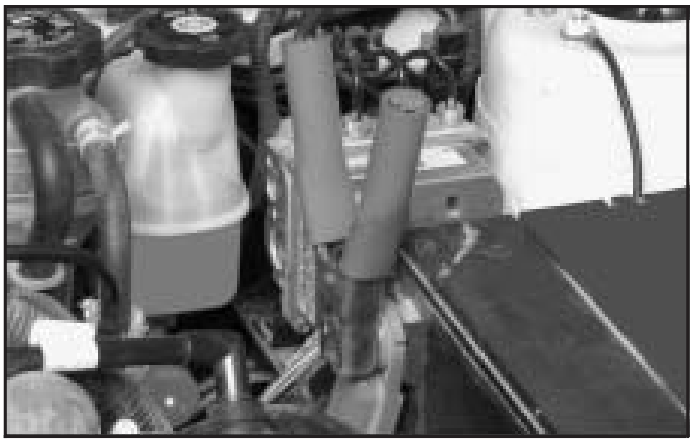

6. Connect the red positive (+) cable to the positive (+) terminal of the dead battery.
7. Do not let the other end touch metal. Connect it to the positive (+) terminal of the good battery. Use a remote positive (+) terminal if the vehicle has one.
8. Now connect the black negative (–) cable to the negative (–) terminal of the good battery. Use a remote negative (–) terminal if the vehicle has one.

   Do not let the other end touch anything until the next step. The other end of the negative (–) cable does not go to the dead battery. It goes to a heavy, unpainted metal engine part or to a remote negative (–) terminal on the vehicle with the dead battery.

Downloaded from www.Manualslib.com manuals search engine

9. Connect the other end of the negative (–) cable at least 18 inches (45 cm) away from the dead battery, but not near engine parts that move. The electrical connection is just as good there, and the chance of sparks getting back to the battery is much less.

   If the security light flashes, wait until the light stops flashing.

10. Now start the vehicle with the good battery and run the engine for a while.

11. Try to start the vehicle that had the dead battery. If it will not start after a few tries, it probably needs service.

Notice: **If the jumper cables are connected or removed in the wrong order, electrical shorting may occur and damage the vehicle. The repairs would not be covered by your warranty. Always connect and remove the jumper cables in the correct order, making sure that the cables do not touch each other or other metal.**

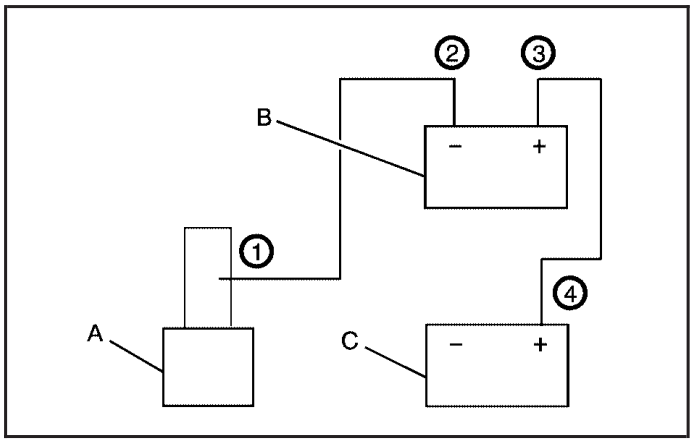

Jumper Cable Removal

A. Heavy, Unpainted Metal Engine Part
B. Good Battery
C. Dead Battery

Downloaded from www.Manualslib.com manuals search engine

To disconnect the jumper cables from both vehicles, do the following:

1. Disconnect the black negative (–) cable from the vehicle that had the dead battery.
2. Disconnect the black negative (–) cable from the vehicle with the good battery.
3. Disconnect the red positive (+) cable from the vehicle with the good battery.
4. Disconnect the red positive (+) cable from the other vehicle.

Headlamp Aiming

The vehicle has a visual optical headlamp aiming system. The aim has been preset at the factory and should need no further adjustment.

However, If the vehicle is damaged in an accident, the headlamp aim may be affected and adjustment may be necessary.

If oncoming vehicles flash their high beams at you, this may also mean the vertical aim needs to be adjusted.

It is recommended that the vehicle is taken to your dealer for service if the headlamps need to be re-aimed. It is possible however, to re-aim the headlamps as described in the following procedure.

The vehicle should be properly prepared as follows:

- The vehicle should be placed so the headlamps are 25 ft. (7.6 m) from a light colored wall or other flat surface.
- The vehicle must have all four tires on a perfectly level surface which is level all the way to the wall or other flat surface.
- The vehicle should be placed so it is perpendicular to the wall or other flat surface.
- The vehicle should not have any snow, ice, or mud on it.
- The vehicle should be fully assembled and all other work stopped while headlamp aiming is being performed.
- The vehicle should be normally loaded with a full tank of fuel and one person or 160 lbs (75 kg) on the driver's seat.
- Tires should be properly inflated.
- The spare tire is in its original location in the vehicle.

Downloaded from www.Manualslib.com manuals search engine

Headlamp aiming is done with the vehicle's low-beam headlamps. The high-beam headlamps will be correctly aimed if the low beams are aimed properly.

To adjust the vertical aim, do the following:

1. Open the hood. See *Hood Release on page 5-11* for more information.

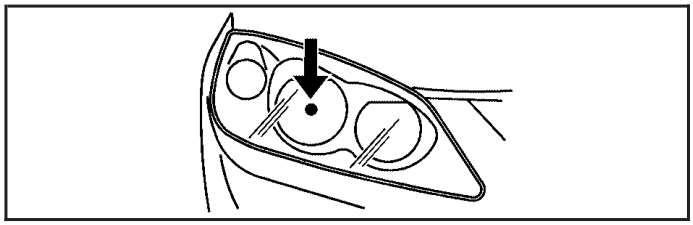

2. Find the aim dot on the lens of the low-beam lamp.
3. Measure the distance from the ground to the aim dot on the low-beam headlamp. Record the distance.
4. At the wall or other flat surface, measure from the ground upward the recorded distance from Step 3 and mark it.
5. Draw or tape a horizontal line the width of the vehicle at the wall or other flat surface where it was marked in Step 4.

Notice: **Do not cover a headlamp to improve beam cut-off when aiming. Covering a headlamp may cause excessive heat build-up which may cause damage to the headlamp.**

6. Turn on the low-beam headlamps and place a piece of cardboard or equivalent in front of the headlamp not being aimed. This should allow only the beam of light from the headlamp being aimed to be seen on the flat surface.

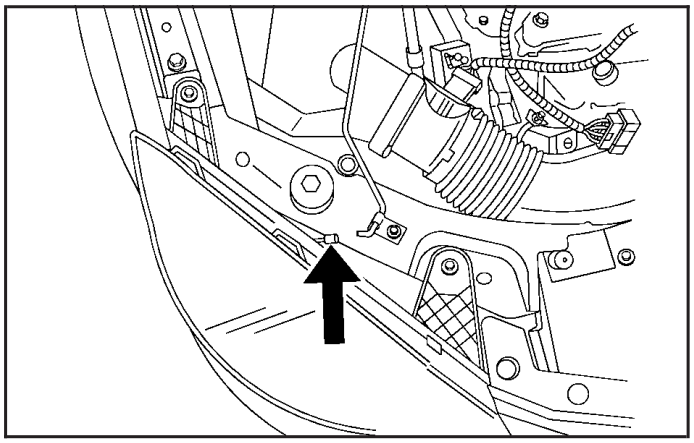

Passenger's Side Shown

7. Locate the vertical headlamp aiming screws, which are under the hood, on top of each headlamp assembly.

Downloaded from www.Manualslib.com manuals search engine

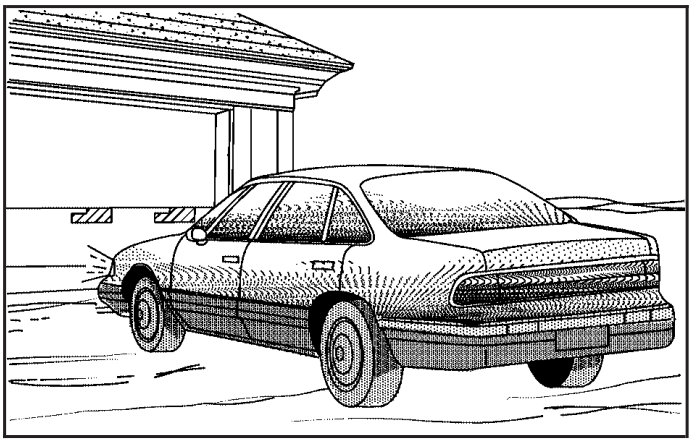

8. Turn the vertical aiming screw until the headlamp beam is aimed below the horizontal tape line. The top edge of the beam cut-off should be positioned 2 inches (5 cm) below the bottom edge of the horizontal tape line.

   The adjustment screws can be turned with a 6 mm external hex.

9. Repeat Steps 7 and 8 for the opposite headlamp.

Bulb Replacement

For the proper type of replacement bulbs, see *Replacement Bulbs on page 5-55*.

For any bulb changing procedure not listed in this section, contact your dealer.

Halogen Bulbs

⚠ CAUTION:

Halogen bulbs have pressurized gas inside and can burst if you drop or scratch the bulb. You or others could be injured. Be sure to read and follow the instructions on the bulb package.

Downloaded from www.Manualslib.com manuals search engine

Headlamps, Front Turn Signal, Sidemarker, and Parking Lamps

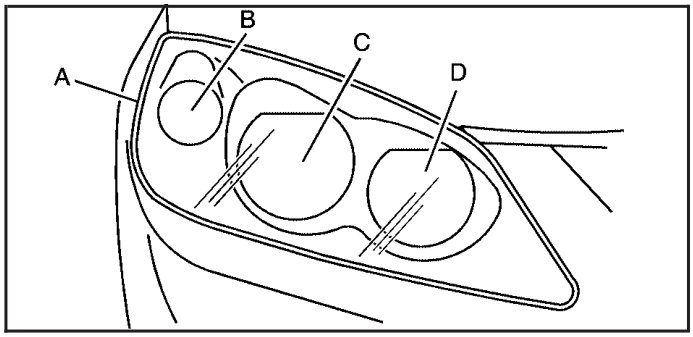

A. Front Sidemarker
B. Front Turn Signal/Parking Lamp
C. Low-Beam Headlamp
D. High-Beam Headlamp

To replace one of these bulbs, do the following:

1. Remove the two screws that secure the headlamp assembly.

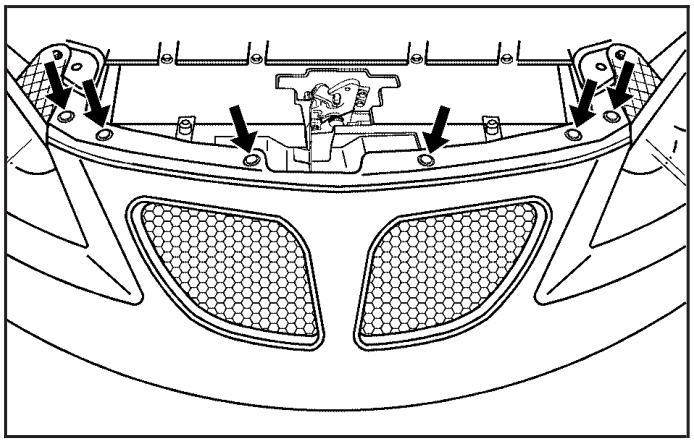

2. Loosen the front fascia by removing the plastic push pins along the top of the tie bar by prying under the fasteners with a tool.
3. Pull back the front fascia then pull the headlamp assembly forward, out of the vehicle. You will need to pry the headlamp assembly away from the fender. This will free the ball stud from its retainer in the fender bracket.

   You may want someone to assist you with the removal of the headlamp assembly to avoid possible damage to the vehicle.

Downloaded from www.Manualslib.com manuals search engine

4. Remove the bulb access cover by turning it counterclockwise.
5. Turn the bulb socket counterclockwise and pull out the bulb assembly.
6. Disconnect the bulb socket from the wiring harness for headlamps.

   For the front turn signal/parking or sidemarker bulbs, unclip the bulb from the socket.
7. Install a new bulb.
8. Reverse Steps 1 through 4 to reinstall the bulb assembly and headlamp assembly.

Center High-Mounted Stoplamp (CHMSL) (Sedan)

To replace a center high-mounted stoplamp (CHMSL) bulb, do the following:

1. Open the trunk lid. See *Trunk on page 2-14* for more information.
2. Locate the center high-mounted stoplamp (CHMSL) on the inside of the trunk lid.
3. Unclip the wiring harness by using a tool to disengage the connector.

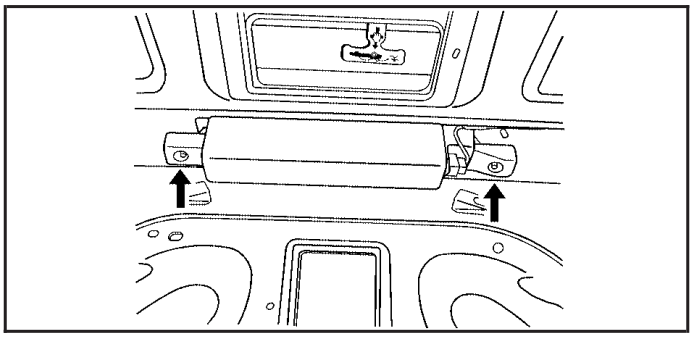

4. Remove the beauty cover by pressing the tabs at either end with a tool.
5. Remove the bulb by turning it counterclockwise.
6. Install a new bulb.
7. Reverse Steps 3 through 5 to reinstall the bulb assembly.

Center High-Mounted Stoplamp (CHMSL) (Retractable Hardtop and Coupe)

If your vehicle has this component and it needs replacement, it is recommended that it be replaced as a unit by your dealer.

Downloaded from www.Manualslib.com manuals search engine

Taillamps, Turn Signal, Sidemarker, Stoplamps and Back-up Lamps (Sedan)

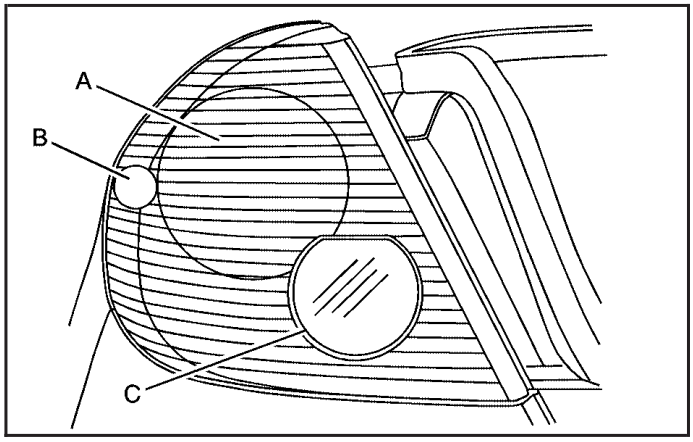

A. Stoplamp/Taillamp/Turn Signal
B. Sidemarker Lamp
C. Back-up Lamp

To replace one of these bulbs, do the following:

1. Open the trunk. See *Trunk on page 2-14* for more information.
2. Remove the convenience net, if equipped.

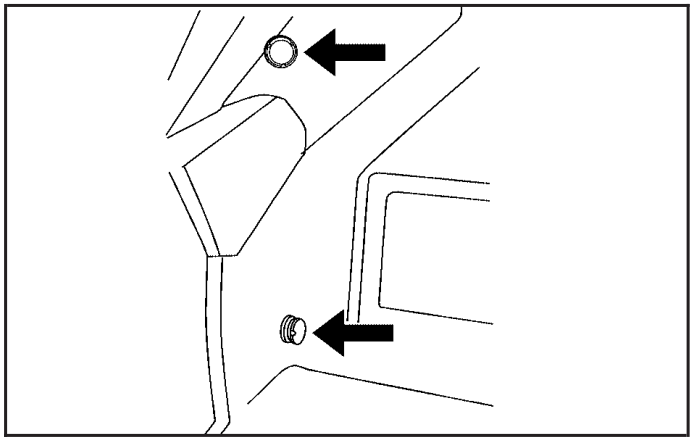

3. Remove the wing nuts holding the trunk trim.

Downloaded from www.Manualslib.com manuals search engine

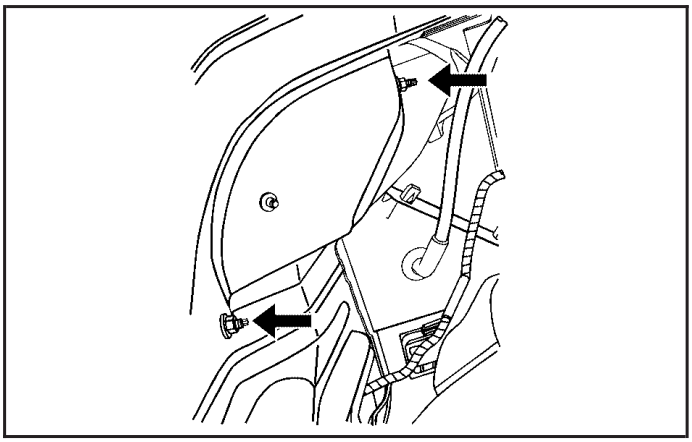

4. Remove the two nuts, which hold the taillamp assembly, from inside the vehicle.
5. Remove the taillamp assembly.
6. Remove the wiring harness from the taillamp assembly by lifting on the release tab.
7. Turn the bulb socket counterclockwise to remove.
8. Pull the bulb from the socket.
9. Install a new bulb.
10. Reverse Steps 2 through 7 to reinstall the taillamp assembly.

Taillamps, Turn Signal, Sidemarker, Stoplamps and Back-up Lamps (Coupe)

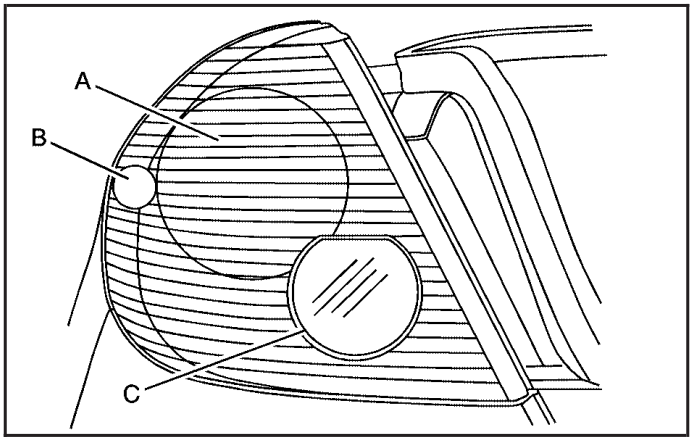

A. Stoplamp/Taillamp/Turn Signal
B. Sidemarker Lamp
C. Back-up Lamp

Downloaded from www.Manualslib.com manuals search engine

To replace one of these bulbs, do the following:

1. Open the trunk. See *Trunk on page 2-14* for more information.
2. Remove the convenience net, if equipped.

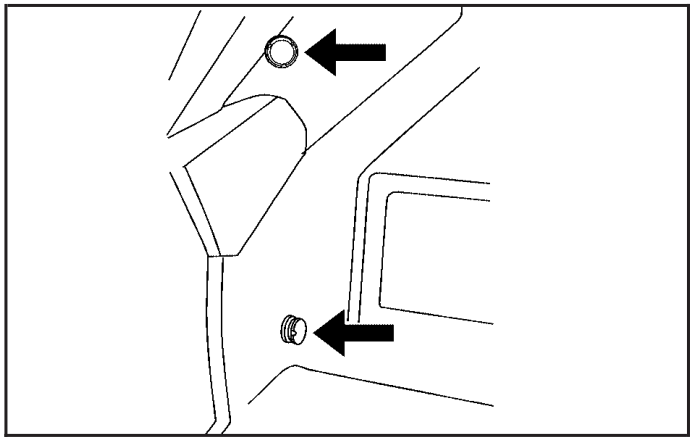

3. Remove the two wing nuts from the trunk trim to expose the hex nuts.
4. Remove the three hex nuts retaining the taillamp assembly.
5. Pull off the assembly to the side to release it from the rear of the vehicle.
6. Turn the bulb socket counterclockwise to remove.
7. Pull the bulb from the bulb socket.
8. Install a new bulb.
9. Reverse Steps 3 through 5 to reinstall the taillamp assembly.

Taillamps, Turn Signal, Sidemarker, Stoplamps and Back-up Lamps (Retractable Hardtop)

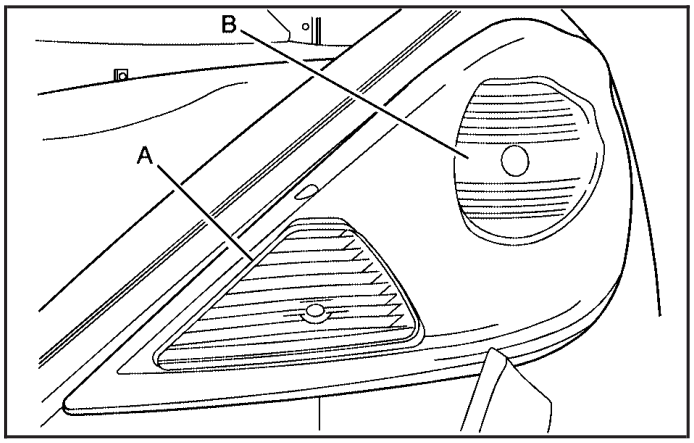

A. Back-up Lamp
B. Sidemarker/Stoplamp/Taillamp/Turn Signal

Downloaded from www.Manualslib.com manuals search engine

To replace one of these bulbs, do the following:

1. Open the trunk. See *Trunk on page 2-14* for more information.
2. Locate the three access plastic covers in the trunk trim, near the taillamp assembly and remove them.
3. Remove the two nuts and one bolt retaining the taillamp assembly.
4. Pull off the assembly to the side to release it from the vehicle.
5. Turn the bulb socket counterclockwise to remove.
6. Pull the bulb from the bulb socket.
7. Install a new bulb.
8. Reverse the steps to reinstall.

Replacement Bulbs

Exterior Lamp	Bulb Number
Back-up	
Coupe and Retractable Hardtop	921
Sedan	3057K
Center High-Mounted Stoplamp (CHMSL)	912***
Front Parking and Turn Signal Lamp	3157KX
Front/Rear Sidemarker Lamp	194
Headlamps	
High-Beam	H9
Low-Beam	H11
Stoplamp, Taillamp and Turn Signal	3057K*
Sidemarker, Stoplamp, Taillamp and Turn Signal	3157K**
* Coupe and Sedan only ** Retractable Hardtop only *** Sedan Only	

For replacement bulbs not listed here, contact your dealer.

Downloaded from www.Manualslib.com manuals search engine

Windshield Wiper Blade Replacement

Windshield wiper blades should be inspected for wear or cracking. See *Scheduled Maintenance on page 6-4* for more information on wiper blade inspection.

Replacement blades come in different types and are removed in different ways. Here's how to remove the wiper blade:

1. Pull the windshield wiper arm connector away from the windshield.

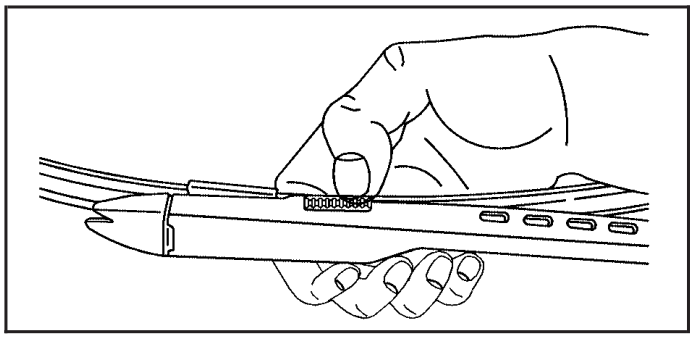

2. Squeeze the grooved areas on each side of the blade, and rotate the blade assembly away from the arm connector.

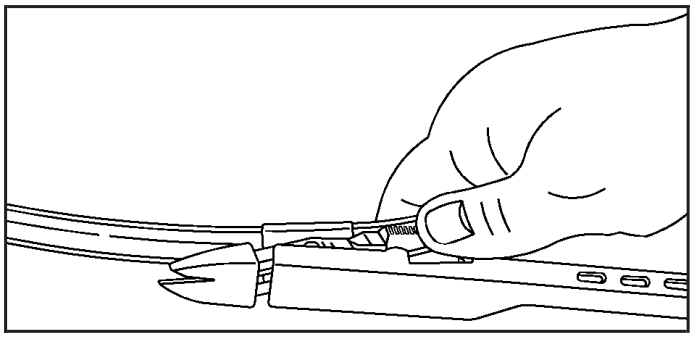

3. Install the new blade onto the arm connector and make sure the grooved areas are fully set in the locked position.

For the proper type and size, see *Normal Maintenance Replacement Parts on page 6-13*.

Downloaded from www.Manualslib.com manuals search engine

Tires

Your new vehicle comes with high-quality tires made by a leading tire manufacturer. If you ever have questions about your tire warranty and where to obtain service, see your GM Warranty booklet for details. For additional information refer to the tire manufacturer's booklet included with your vehicle's owner manual.

⚠ CAUTION:

- **Poorly maintained and improperly used tires are dangerous.**
- **Overloading your tires can cause overheating as a result of too much friction. You could have an air-out and a serious accident. See *Loading Your Vehicle on page 4-33*.**
- **Underinflated tires pose the same danger as overloaded tires. The resulting accident could cause serious injury. Check all tires frequently to maintain the recommended pressure. Tire pressure should be checked when your tires are cold.**
- **Overinflated tires are more likely to be cut, punctured, or broken by a sudden impact — such as when you hit a pothole. Keep tires at the recommended pressure.**
- **Worn, old tires can cause accidents. If your tread is badly worn, or if your tires have been damaged, replace them.**

See *Inflation - Tire Pressure on page 5-64* for inflation pressure adjustment for high speed driving.

Downloaded from www.Manualslib.com manuals search engine

Low-Profile Performance Tire (GTP)

If your vehicle has P225/50R18 94W size tires, they are classified as “low-profile performance” tires. These tires are designed for very responsive driving on wet or dry pavement. You may also notice more road noise with low-profile performance tires and that they tend to wear faster.

Notice: **If your vehicle has low-profile tires, they are more susceptible to damage from road hazards or curb impact than standard profile tires. Tire and/or wheel assembly damage can occur when coming into contact with road hazards like, potholes, or sharp edged objects, or when sliding into a curb. Your GM warranty does not cover this type of damage. Keep tires set to the correct inflation pressure and, when possible avoid contact with curbs, potholes, and other road hazards.**

For cold weather driving conditions, you may prefer to get tires designed for snow or ice. See your dealer for details regarding winter tire availability and proper tire selection. Also, see *Buying New Tires on page 5-68*.

If you choose to use winter tires:

- Use tires of the same brand and tread type on all four wheel positions.
- Use only radial ply tires of the same size, load range, and speed rating as your original equipment tires.

Winter tires with the same speed rating as your original equipment tires may not be available for H, V, W and ZR speed rated tires. If you choose winter tires with a lower speed rating, never exceed the tire’s maximum speed capability.

Downloaded from www.Manualslib.com manuals search engine

Tire Sidewall Labelling

Useful information about a tire is molded into its sidewall. The examples below show a typical passenger vehicle tire and a compact spare tire sidewall.

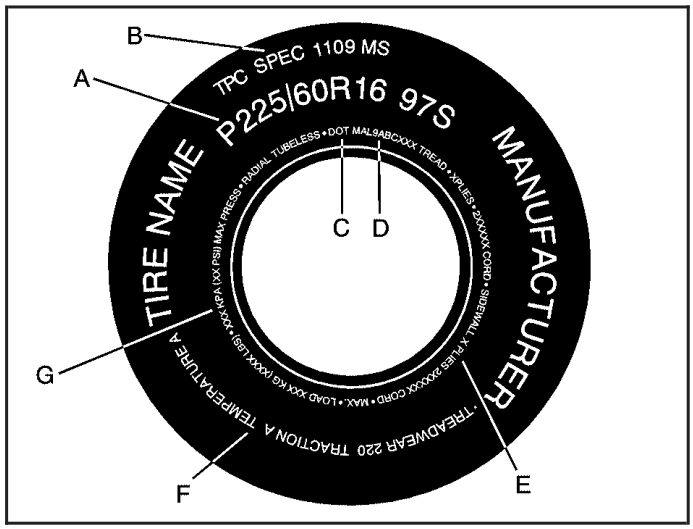

Passenger (P-Metric) Tire Example

(A) Tire Size: The tire size is a combination of letters and numbers used to define a particular tire's width, height, aspect ratio, construction type and service description. See the "Tire Size" illustration later in this section for more detail.

(B) TPC Spec (Tire Performance Criteria Specification): Original equipment tires designed to GM's specific tire performance criteria have a TPC specification code molded onto the sidewall. GM's TPC specifications meet or exceed all federal safety guidelines.

(C) DOT (Department of Transportation): The Department of Transportation (DOT) code indicates that the tire is in compliance with the U.S. Department of Transportation Motor Vehicle Safety Standards.

(D) Tire Identification Number (TIN): The letters and numbers following DOT (Department of Transportation) code is the Tire Identification Number (TIN). The TIN shows the manufacturer and plant code, tire size, and date the tire was manufactured. The TIN is molded onto both sides of the tire, although only one side may have the date of manufacture.

(E) Tire Ply Material: The type of cord and number of plies in the sidewall and under the tread.

(F) Uniform Tire Quality Grading (UTQG): Tire manufacturers are required to grade tires based on three performance factors: treadwear, traction and temperature resistance. For more information see *Uniform Tire Quality Grading on page 5-70*.

(G) Maximum Cold Inflation Load Limit: Maximum load that can be carried and the maximum pressure needed to support that load.

Downloaded from www.Manualslib.com manuals search engine

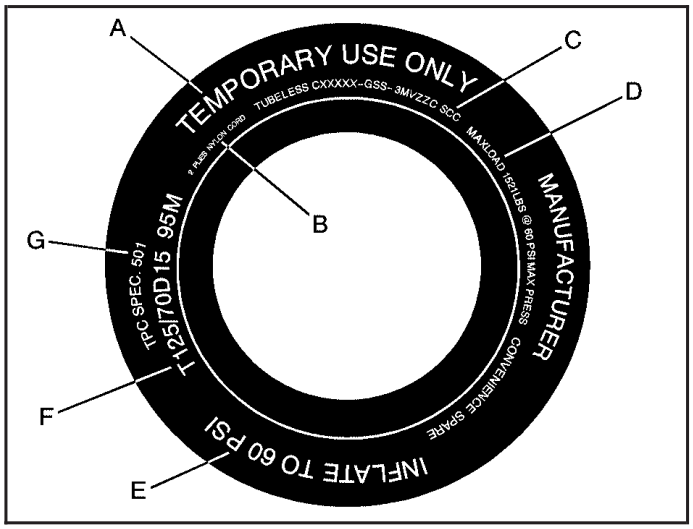

Compact Spare Tire Example

(A) Temporary Use Only: The compact spare tire or temporary use tire has a tread life of approximately 3,000 miles (5 000 km) and should not be driven at speeds over 65 mph (105 km/h). The compact spare tire is for emergency use when a regular road tire has lost air and gone flat. If your vehicle has a compact spare tire, see *Compact Spare Tire on page 5-86* and *If a Tire Goes Flat on page 5-74*.

(B) Tire Ply Material: The type of cord and number of plies in the sidewall and under the tread.

(C) Tire Identification Number (TIN): The letters and numbers following the DOT (Department of Transportation) code is the Tire Identification Number (TIN). The TIN shows the manufacturer and plant code, tire size, and date the tire was manufactured. The TIN is molded onto both sides of the tire, although only one side may have the date of manufacture.

(D) Maximum Cold Inflation Load Limit: Maximum load that can be carried and the maximum pressure needed to support that load.

(E) Tire Inflation: The temporary use tire or compact spare tire should be inflated to 60 psi (420 kPa). For more information on tire pressure and inflation see *Inflation - Tire Pressure on page 5-64*.

(F) Tire Size: A combination of letters and numbers define a tire's width, height, aspect ratio, construction type and service description. The letter T as the first character in the tire size means the tire is for temporary use only.

(G) TPC Spec (Tire Performance Criteria Specification): Original equipment tires designed to GM's specific tire performance criteria have a TPC specification code molded onto the sidewall. GM's TPC specifications meet or exceed all federal safety guidelines.

Downloaded from www.Manualslib.com manuals search engine

Tire Size

The following illustration shows an example of a typical passenger vehicle tire size.

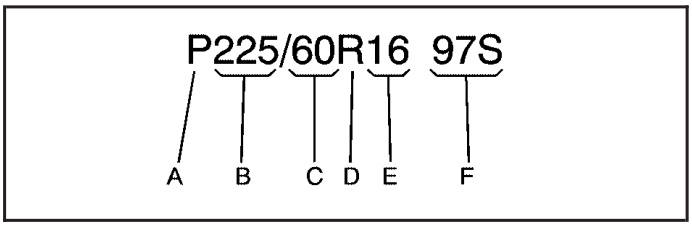

(A) Passenger (P-Metric) Tire: The United States version of a metric tire sizing system. The letter P as the first character in the tire size means a passenger vehicle tire engineered to standards set by the U.S. Tire and Rim Association.

(B) Tire Width: The three-digit number indicates the tire section width in millimeters from sidewall to sidewall.

(C) Aspect Ratio: A two-digit number that indicates the tire height-to-width measurements. For example, if the tire size aspect ratio is 60, as shown in item C of the illustration, it would mean that the tire's sidewall is 60 percent as high as it is wide.

(D) Construction Code: A letter code is used to indicate the type of ply construction in the tire. The letter R means radial ply construction; the letter D means diagonal or bias ply construction; and the letter B means belted-bias ply construction.

(E) Rim Diameter: Diameter of the wheel in inches.

(F) Service Description: These characters represent the load range and speed rating of the tire. The load index represents the load carry capacity a tire is certified to carry. The load index can range from 1 to 279. The speed rating is the maximum speed a tire is certified to carry a load. Speed ratings range from A to Z.

Downloaded from www.Manualslib.com manuals search engine

Tire Terminology and Definitions

Air Pressure: The amount of air inside the tire pressing outward on each square inch of the tire. Air pressure is expressed in pounds per square inch (psi) or kilopascal (kPa).

Accessory Weight: This means the combined weight of optional accessories. Some examples of optional accessories are, automatic transmission, power steering, power brakes, power windows, power seats, and air conditioning.

Aspect Ratio: The relationship of a tire's height to its width.

Belt: A rubber coated layer of cords that is located between the plies and the tread. Cords may be made from steel or other reinforcing materials.

Bead: The tire bead contains steel wires wrapped by steel cords that hold the tire onto the rim.

Bias Ply Tire: A pneumatic tire in which the plies are laid at alternate angles less than 90 degrees to the centerline of the tread.

Cold Inflation Pressure: The amount of air pressure in a tire, measured in pounds per square inch (psi) or kilopascals (kPa) before a tire has built up heat from driving. See *Inflation - Tire Pressure on page 5-64*.

Curb Weight: This means the weight of a motor vehicle with standard and optional equipment including the maximum capacity of fuel, oil and coolant, but without passengers and cargo.

DOT Markings: A code molded into the sidewall of a tire signifying that the tire is in compliance with the U.S. Department of Transportation (DOT) motor vehicle safety standards. The DOT code includes the Tire Identification Number (TIN), an alphanumeric designator which can also identify the tire manufacturer, production plant, brand and date of production.

GVWR: Gross Vehicle Weight Rating, see *Loading Your Vehicle on page 4-33*.

GAWR FRT: Gross Axle Weight Rating for the front axle, see *Loading Your Vehicle on page 4-33*.

GAWR RR: Gross Axle Weight Rating for the rear axle, see *Loading Your Vehicle on page 4-33*.

Intended Outboard Sidewall: The side of an asymmetrical tire, that must always face outward when mounted on a vehicle.

Downloaded from www.Manualslib.com manuals search engine

Kilopascal (kPa): The metric unit for air pressure.

Light Truck (LT-Metric) Tire: A tire used on light duty trucks and some multipurpose passenger vehicles.

Load Index: An assigned number ranging from 1 to 279 that corresponds to the load carrying capacity of a tire.

Maximum Inflation Pressure: The maximum air pressure to which a cold tire may be inflated. The maximum air pressure is molded onto the sidewall.

Maximum Load Rating: The load rating for a tire at the maximum permissible inflation pressure for that tire.

Maximum Loaded Vehicle Weight: The sum of curb weight; accessory weight; vehicle capacity weight; and production options weight.

Normal Occupant Weight: The number of occupants a vehicle is designed to seat multiplied by 150 lbs (68 kg). See *Loading Your Vehicle on page 4-33*.

Occupant Distribution: Designated seating positions.

Outward Facing Sidewall: The side of an asymmetrical tire that has a particular side that faces outward when mounted on a vehicle. The side of the tire that contains a whitewall, bears white lettering or bears manufacturer, brand, and/or model name molding that is higher or deeper than the same moldings on the other sidewall of the tire.

Passenger (P-Metric) Tire: A tire used on passenger cars and some light duty trucks and multipurpose vehicles.

Recommended Inflation Pressure: Vehicle manufacturer's recommended tire inflation pressure and shown on the tire placard. See *Inflation - Tire Pressure on page 5-64* and *Loading Your Vehicle on page 4-33*.

Radial Ply Tire: A pneumatic tire in which the ply cords that extend to the beads are laid at 90 degrees to the centerline of the tread.

Rim: A metal support for a tire and upon which the tire beads are seated.

Sidewall: The portion of a tire between the tread and the bead.

Speed Rating: An alphanumeric code assigned to a tire indicating the maximum speed at which a tire can operate.

Traction: The friction between the tire and the road surface. The amount of grip provided.

Tread: The portion of a tire that comes into contact with the road.

Downloaded from www.Manualslib.com manuals search engine

Treadwear Indicators: Narrow bands, sometimes called “wear bars,” that show across the tread of a tire when only 1/16 inch (1.6 mm) of tread remains. See *When It Is Time for New Tires on page 5-67*.

UTQGS (Uniform Tire Quality Grading Standards): A tire information system that provides consumers with ratings for a tire’s traction, temperature, and treadwear. Ratings are determined by tire manufacturers using government testing procedures. The ratings are molded into the sidewall of the tire. See *Uniform Tire Quality Grading on page 5-70*.

Vehicle Capacity Weight: The number of designated seating positions multiplied by 150 lbs (68 kg) plus the rated cargo load. See *Loading Your Vehicle on page 4-33*.

Vehicle Maximum Load on the Tire: Load on an individual tire due to curb weight, accessory weight, occupant weight, and cargo weight.

Vehicle Placard: A label permanently attached to a vehicle showing the vehicle’s capacity weight and the original equipment tire size and recommended inflation pressure. See “Tire and Loading Information Label” under *Loading Your Vehicle on page 4-33*.

Inflation - Tire Pressure

Tires need the correct amount of air pressure to operate effectively.

Notice: **Do not let anyone tell you that under-inflation or over-inflation is all right. It is not. If your tires do not have enough air (under-inflation), you can get the following:**

- **Too much flexing**
- **Too much heat**
- **Tire overloading**
- **Premature or irregular wear**
- **Poor handling**
- **Reduced fuel economy**

If your tires have too much air (over-inflation), you can get the following:

- **Unusual wear**
- **Poor handling**
- **Rough ride**
- **Needless damage from road hazards**

Downloaded from www.Manualslib.com manuals search engine

A Tire and Loading Information label is attached to the vehicle's center pillar (B-pillar), below the driver's door latch. This label shows your vehicle's original equipment tires and the correct inflation pressures for your tires when they are cold. The recommended cold tire inflation pressure, shown on the label, is the minimum amount of air pressure needed to support your vehicle's maximum load carrying capacity.

For additional information regarding how much weight your vehicle can carry, and an example of the tire and loading information label, see *Loading Your Vehicle on page 4-33*. How you load your vehicle affects vehicle handling and ride comfort, never load your vehicle with more weight than it was designed to carry.

When to Check

Check your tires once a month or more. Do not forget to check the compact spare tire, it should be at 60 psi (420 kPa). For additional information regarding the compact spare tire, see *Compact Spare Tire on page 5-86*.

How to Check

Use a good quality pocket-type gage to check tire pressure. You cannot tell if your tires are properly inflated simply by looking at them. Radial tires may look properly inflated even when they are under-inflated. Check the tire's inflation pressure when the tires are cold. Cold means your vehicle has been sitting for at least three hours or driven no more than 1 mile (1.6 km).

Remove the valve cap from the tire valve stem. Press the tire gage firmly onto the valve to get a pressure measurement. If the cold tire inflation pressure matches the recommended pressure on the Tire and Loading Information label, no further adjustment is necessary. If the inflation pressure is low, add air until you reach the recommended amount.

If you overfill the tire, release air by pushing on the metal stem in the center of the tire valve. Re-check the tire pressure with the tire gage.

Be sure to put the valve caps back on the valve stems. They help prevent leaks by keeping out dirt and moisture.

Downloaded from www.Manualslib.com manuals search engine

Tire Inspection and Rotation

Tires should be rotated every 5,000 to 8,000 miles (8 000 to 13 000 km).

Any time you notice unusual wear, rotate your tires as soon as possible and check wheel alignment. Also check for damaged tires or wheels. See *When It Is Time for New Tires on page 5-67* and *Wheel Replacement on page 5-72* for more information.

The purpose of regular rotation is to achieve more uniform wear for all tires on the vehicle. The first rotation is the most important. See *Scheduled Maintenance on page 6-4*.

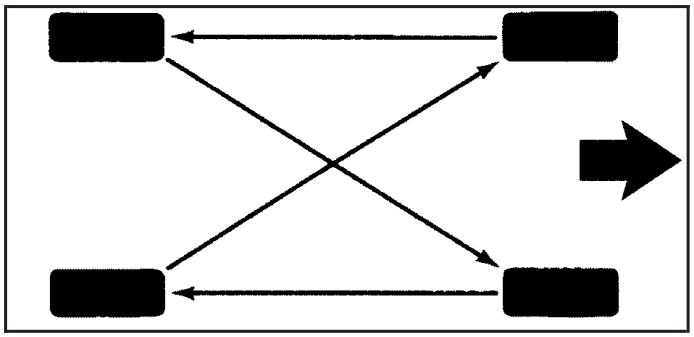

When rotating your tires, always use the correct rotation pattern shown here.

Do not include the compact spare tire in your tire rotation.

After the tires have been rotated, adjust the front and rear inflation pressures as shown on the Tire and Loading Information label.

Make certain that all wheel nuts are properly tightened. See “Wheel Nut Torque” under *Capacities and Specifications on page 5-105*.

Downloaded from www.Manualslib.com manuals search engine

⚠ CAUTION:

Rust or dirt on a wheel, or on the parts to which it is fastened, can make wheel nuts become loose after a time. The wheel could come off and cause an accident. When you change a wheel, remove any rust or dirt from places where the wheel attaches to the vehicle. In an emergency, you can use a cloth or a paper towel to do this; but be sure to use a scraper or wire brush later, if needed, to get all the rust or dirt off. See *Changing a Flat Tire on page 5-74*.

When It Is Time for New Tires

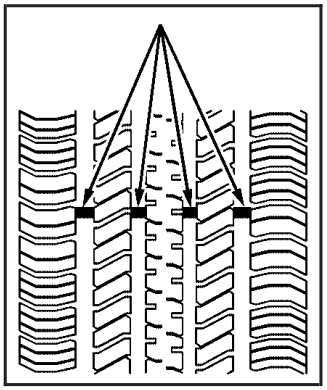

One way to tell when it is time for new tires is to check the treadwear indicators, which will appear when your tires have only 1/16 inch (1.6 mm) or less of tread remaining.

You need a new tire if any of the following statements are true:

- You can see the indicators at three or more places around the tire.
- You can see cord or fabric showing through the tire's rubber.
- The tread or sidewall is cracked, cut or snagged deep enough to show cord or fabric.
- The tire has a bump, bulge or split.
- The tire has a puncture, cut or other damage that cannot be repaired well because of the size or location of the damage.

Downloaded from www.Manualslib.com manuals search engine

Buying New Tires

To find out what kind and size of tires your vehicle needs, look at the tire and loading information label. For more information about this label and its location on your vehicle, see *Loading Your Vehicle on page 4-33*.

The tires installed on your vehicle when it was new had a Tire Performance Criteria Specification (TPC Spec) number on each tire's sidewall. When you get new tires, GM recommends that you get tires with that same TPC Spec number. That way your vehicle will continue to have tires that are designed to give proper endurance, handling, speed rating, load range, traction, ride and other things during normal service on your vehicle. If your tires have an all-season tread design, the TPC number will be followed by an "MS" (for mud and snow).

If you ever replace your tires with those not having a TPC Spec number, make sure they are the same size, load range, speed rating and construction type (bias, bias-belted or radial) as your original tires.

⚠ CAUTION:

Mixing tires could cause you to lose control while driving. If you mix tires of different sizes, brands, or types (radial and bias-belted tires), the vehicle may not handle properly, and you could have a crash. Using tires of different sizes, brands, or types may also cause damage to your vehicle. Be sure to use the correct size, brand, and type of tires on all wheels. It is all right to drive with your compact spare temporarily, as it was developed for use on your vehicle. See *Compact Spare Tire on page 5-86*.

Downloaded from www.Manualslib.com manuals search engine

⚠ CAUTION:

If you use bias-ply tires on your vehicle, the wheel rim flanges could develop cracks after many miles of driving. A tire and/or wheel could fail suddenly, causing a crash. Use only radial-ply tires with the wheels on your vehicle.

Different Size Tires and Wheels

If you add wheels or tires that are a different size than your original equipment wheels and tires, this may affect the way your vehicle performs, including its handling characteristics and resistance to rollover.

⚠ CAUTION:

If you add different sized wheels, your vehicle may not provide an acceptable level of performance and safety if tires not recommended for those wheels are selected. You may increase the chance that you will crash and suffer serious injury. Only use GM specific wheel and tire systems developed for your vehicle, and have them properly installed by a GM certified technician.

See *Buying New Tires on page 5-68* and *Accessories and Modifications on page 5-3* for additional information.

Downloaded from www.Manualslib.com manuals search engine

Uniform Tire Quality Grading

Quality grades can be found where applicable on the tire sidewall between tread shoulder and maximum section width. For example:

Treadwear 200 Traction AA Temperature A

The following information relates to the system developed by the United States National Highway Traffic Safety Administration, which grades tires by treadwear, traction and temperature performance. (This applies only to vehicles sold in the United States.) The grades are molded on the sidewalls of most passenger car tires. The Uniform Tire Quality Grading system does not apply to deep tread, winter-type snow tires, space-saver or temporary use spare tires, tires with nominal rim diameters of 10 to 12 inches (25 to 30 cm), or to some limited-production tires.

While the tires available on General Motors passenger cars and light trucks may vary with respect to these grades, they must also conform to federal safety requirements and additional General Motors Tire Performance Criteria (TPC) standards.

Treadwear

The treadwear grade is a comparative rating based on the wear rate of the tire when tested under controlled conditions on a specified government test course. For example, a tire graded 150 would wear one and a half (1.5) times as well on the government course as a tire graded 100. The relative performance of tires depends upon the actual conditions of their use, however, and may depart significantly from the norm due to variations in driving habits, service practices and differences in road characteristics and climate.

Traction – AA, A, B, C

The traction grades, from highest to lowest, are AA, A, B, and C. Those grades represent the tire's ability to stop on wet pavement as measured under controlled conditions on specified government test surfaces of asphalt and concrete. A tire marked C may have poor traction performance. Warning: The traction grade assigned to this tire is based on straight-ahead braking traction tests, and does not include acceleration, cornering, hydroplaning, or peak traction characteristics.

Downloaded from www.Manualslib.com manuals search engine

Temperature – A, B, C

The temperature grades are A (the highest), B, and C, representing the tire's resistance to the generation of heat and its ability to dissipate heat when tested under controlled conditions on a specified indoor laboratory test wheel. Sustained high temperature can cause the material of the tire to degenerate and reduce tire life, and excessive temperature can lead to sudden tire failure. The grade C corresponds to a level of performance which all passenger car tires must meet under the Federal Motor Vehicle Safety Standard No. 109. Grades B and A represent higher levels of performance on the laboratory test wheel than the minimum required by law.

Warning: The temperature grade for this tire is established for a tire that is properly inflated and not overloaded. Excessive speed, underinflation, or excessive loading, either separately or in combination, can cause heat buildup and possible tire failure.

Wheel Alignment and Tire Balance

The tires and wheels on your vehicle were aligned and balanced carefully at the factory to give you the longest tire life and best overall performance. Adjustments to wheel alignment and tire balancing will not be necessary on a regular basis. However, if you notice unusual tire wear or your vehicle pulling to one side or the other, the alignment may need to be checked. If you notice your vehicle vibrating when driving on a smooth road, your tires and wheels may need to be rebalanced. See your dealer for proper diagnosis.

Downloaded from www.Manualslib.com manuals search engine

Wheel Replacement

Replace any wheel that is bent, cracked or badly rusted or corroded. If wheel nuts keep coming loose, the wheel, wheel bolts and wheel nuts should be replaced. If the wheel leaks air, replace it (except some aluminum wheels, which can sometimes be repaired). See your dealer if any of these conditions exist.

Your dealer will know the kind of wheel you need.

Each new wheel should have the same load-carrying capacity, diameter, width, offset and be mounted the same way as the one it replaces.

If you need to replace any of your wheels, wheel bolts or wheel nuts, replace them only with new GM original equipment parts. This way, you will be sure to have the right wheel, wheel bolts and wheel nuts for your vehicle.

⚠ CAUTION:

Using the wrong replacement wheels, wheel bolts or wheel nuts on your vehicle can be dangerous. It could affect the braking and handling of your vehicle, make your tires lose air and make you lose control. You could have a collision in which you or others could be injured. Always use the correct wheel, wheel bolts and wheel nuts for replacement.

Notice: **The wrong wheel can also cause problems with bearing life, brake cooling, speedometer or odometer calibration, headlamp aim, bumper height, vehicle ground clearance and tire or tire chain clearance to the body and chassis.**

See *Changing a Flat Tire on page 5-74* for more information.

Downloaded from www.Manualslib.com manuals search engine

Used Replacement Wheels

⚠ CAUTION:

Putting a used wheel on your vehicle is dangerous. You cannot know how it has been used or how far it has been driven. It could fail suddenly and cause a crash. If you have to replace a wheel, use a new GM original equipment wheel.

Tire Chains

⚠ CAUTION:

Do not use tire chains, there is not enough clearance.

Tire chains used on a vehicle without the proper amount of clearance can cause damage to the brakes, suspension or other vehicle parts. The area damaged by the tire chains could cause you to lose control of your vehicle and you or others may be injured in a crash.

Use another type of traction device only if its manufacturer recommends it for use on your vehicle and tire size combination and road conditions. Follow that manufacturer's instructions. To help avoid damage to your vehicle, drive slowly, re-adjust or remove the device if is contacting your vehicle, and do not spin your wheels.

If you do find traction devices that will fit, install them on the front tires.

Downloaded from www.Manualslib.com manuals search engine

If a Tire Goes Flat

It is unusual for a tire to blowout while you are driving, especially if you maintain your vehicle's tires properly. If air goes out of a tire, it is much more likely to leak out slowly. But if you should ever have a blowout, here are a few tips about what to expect and what to do:

If a front tire fails, the flat tire will create a drag that pulls the vehicle toward that side. Take your foot off the accelerator pedal and grip the steering wheel firmly. Steer to maintain lane position, and then gently brake to a stop well out of the traffic lane.

A rear blowout, particularly on a curve, acts much like a skid and may require the same correction you would use in a skid. In any rear blowout remove your foot from the accelerator pedal. Get the vehicle under control by steering the way you want the vehicle to go. It may be very bumpy and noisy, but you can still steer. Gently brake to a stop, well off the road if possible.

⚠ CAUTION:

Lifting a vehicle and getting under it to do maintenance or repairs is dangerous without the appropriate safety equipment and training. The jack provided with your vehicle is designed only for changing a flat tire. If it is used for anything else, you or others could be badly injured or killed if the vehicle slips off the jack. Use the jack provided with your vehicle only for changing a flat tire.

If a tire goes flat, the next part shows how to use the jacking equipment to change a flat tire safely.

Changing a Flat Tire

If a tire goes flat, avoid further tire and wheel damage by driving slowly to a level place. Turn on your hazard warning flashers.

Downloaded from www.Manualslib.com manuals search engine

⚠ CAUTION:

Changing a tire can be dangerous. The vehicle can slip off the jack and roll over or fall on you or other people. You and they could be badly injured or even killed. Find a level place to change your tire. To help prevent the vehicle from moving:

1. **Set the parking brake firmly.**
2. **Put an automatic transaxle shift lever in PARK (P), or shift a manual transaxle to FIRST (1) or REVERSE (R).**
3. **Turn off the engine and do not restart while the vehicle is raised.**
4. **Do not allow passengers to remain in the vehicle.**

To be even more certain the vehicle will not move, you should put blocks at the front and rear of the tire farthest away from the one being changed. That would be the tire on the other side, at the opposite end of the vehicle.

When you have a flat tire, use the following example as a guide to assist you in the placement of wheel blocks.

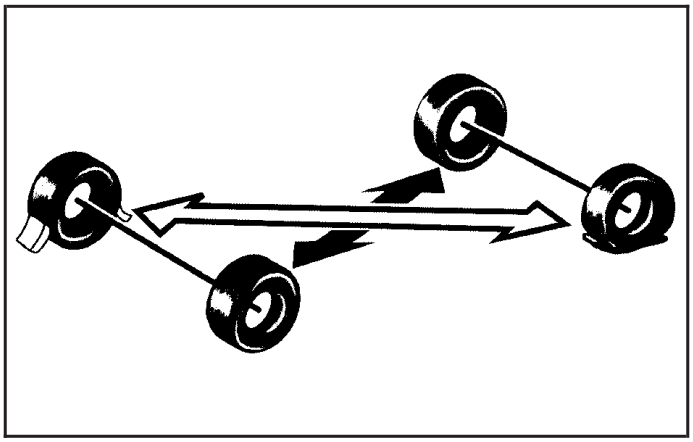

The following information will tell you how to use the jack and change a tire.

Downloaded from www.Manualslib.com manuals search engine

Removing the Spare Tire and Tools

The equipment you will need is located in the trunk.

1. If you have a retractable hardtop model, ensure the hardtop is in the up position.
2. Open the trunk. See *Trunk on page 2-14* for more information.
3. If you have a sedan or coupe model, lift the handle on the spare tire cover. The handle may hook on the front edge of the trunk's weatherstrip to hold the cover out of the way.

   If you have a retractable hardtop model, unlatch the trunk cargo cover so that it is in the open position. Then remove the cover from the spare tire.

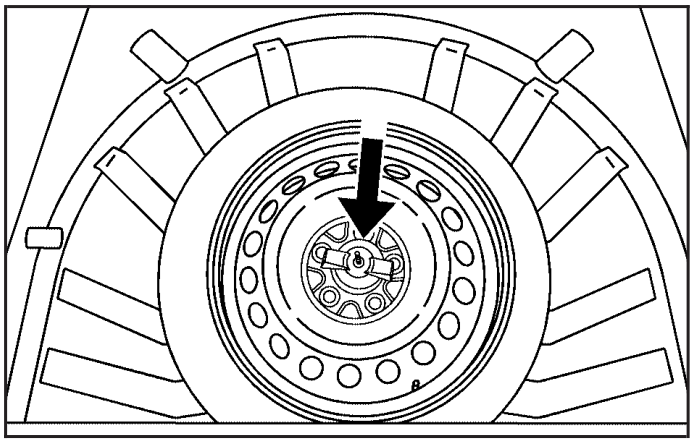

4. Turn the wing nut counterclockwise and remove it. Then remove the compact spare tire. See *Compact Spare Tire on page 5-86* for more information.
5. Remove the wing nut holding the jack in place.
6. Remove the extension bolt that is clipped to the jack. You will need this later to store the flat tire.
7. Remove the jack and wheel wrench from the trunk.

Downloaded from www.Manualslib.com manuals search engine

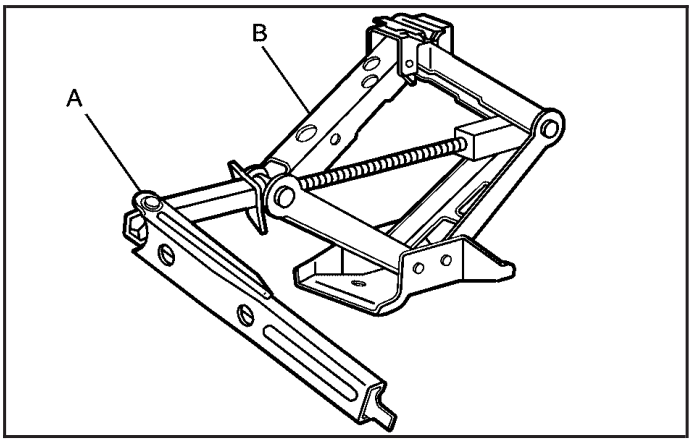

The tools you will be using include the wheel wrench (A) and jack (B).

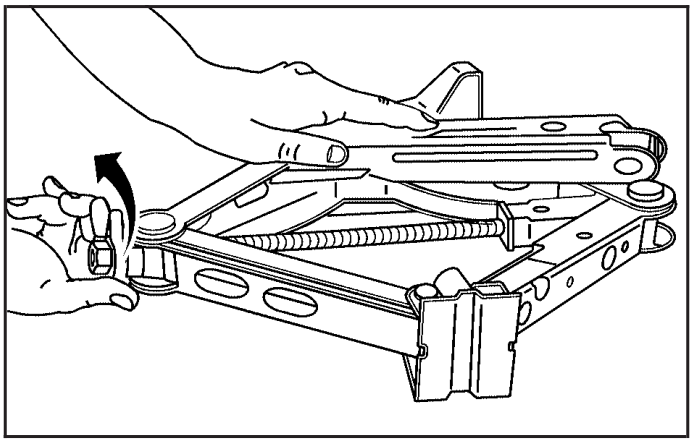

1. Turn the plastic wing nut counterclockwise to loosen the wheel wrench.
2. Unhook the wheel wrench from the jack.

Downloaded from www.Manualslib.com manuals search engine

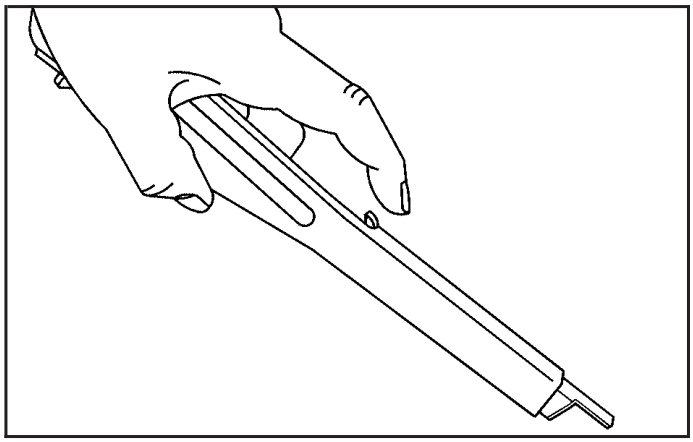

3. Extend the handle on the wheel wrench by pressing the button with your index finger and pulling on the end of the wrench. You must do this before using the wheel wrench.

Removing the Flat Tire and Installing the Spare Tire

1. If your vehicle has a wheel cover or hubcap that has plastic wheel nut caps, then loosen the plastic nut caps. You may need to use the wheel wrench to loosen them. Do not pry off wheel covers or center caps that have plastic wheel nut caps.

2. Remove the wheel cover or center cap from the wheel to locate the wheel nuts.

   If your vehicle has a wheel cover or hubcap without plastic wheel nut caps, gently pry on the edge of the plastic wheel trim to remove it from the wheel to find the wheel nuts.

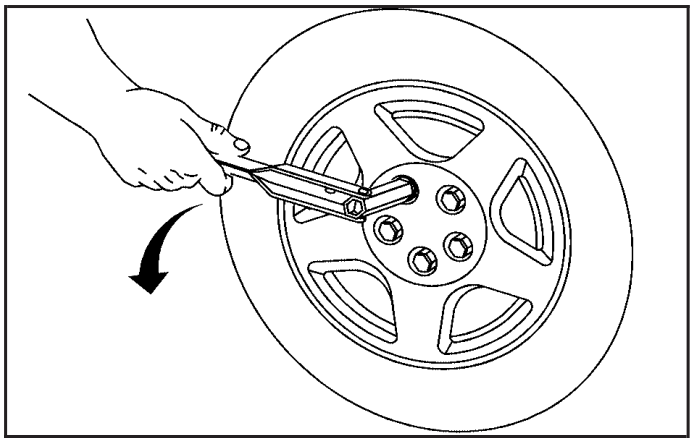

3. Use the wheel wrench to loosen all the wheel nuts. Do not remove them yet.

Downloaded from www.Manualslib.com manuals search engine

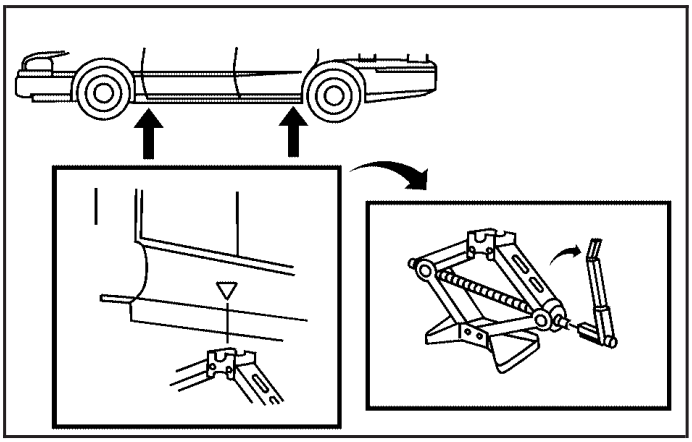

4. Position the lift head at the jack location nearest the flat tire. Make sure all of the jack lift head is touching the jacking flange under the body. Do not place the jack under a body panel. The lower body panel has an arrow to aid in locating the jacking location.
5. Put the compact spare tire near you.

⚠ CAUTION:

Getting under a vehicle when it is jacked up is dangerous. If the vehicle slips off the jack you could be badly injured or killed. Never get under a vehicle when it is supported only by a jack.

Downloaded from www.Manualslib.com manuals search engine

⚠ CAUTION:

Raising your vehicle with the jack improperly positioned can damage the vehicle and even make the vehicle fall. To help avoid personal injury and vehicle damage, be sure to fit the jack lift head into the proper location before raising the vehicle.

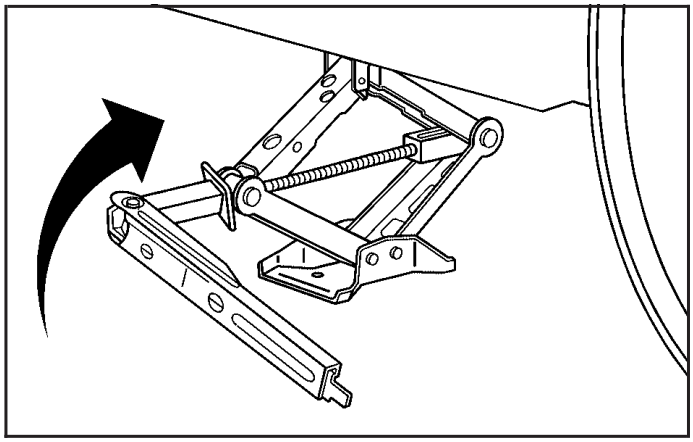

6. Raise the vehicle by turning the wheel wrench clockwise. Raise the vehicle far enough off the ground so there is enough room for the compact spare tire to fit underneath the wheel well.
7. Remove all of the wheel nuts.
8. Remove the flat tire.

⚠ CAUTION:

Rust or dirt on the wheel, or on the parts to which it is fastened, can make the wheel nuts become loose after a time. The wheel could come off and cause an accident. When you change a wheel, remove any rust or dirt from the places where the wheel attaches to the vehicle. In an emergency, you can use a cloth or a paper towel to do this; but be sure to use a scraper or wire brush later, if needed, to get all the rust or dirt off.

Downloaded from www.Manualslib.com manuals search engine

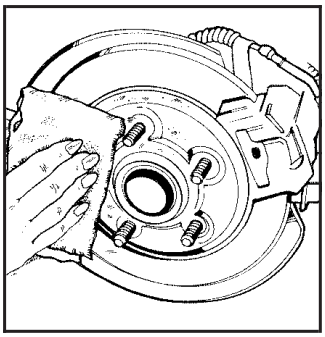

9. Remove any rust or dirt from the wheel bolts, mounting surfaces and spare wheel.

10. Install the compact spare tire.

⚠ CAUTION:

Never use oil or grease on studs or nuts. If you do, the nuts might come loose. Your wheel could fall off, causing a serious accident.

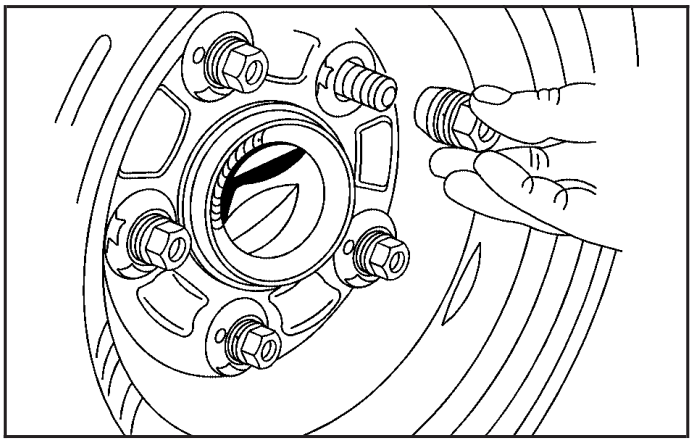

11. Put the wheel nuts back on with the rounded end of the nuts toward the wheel. Tighten each nut by hand until the wheel is held against the hub.

Downloaded from www.Manualslib.com manuals search engine

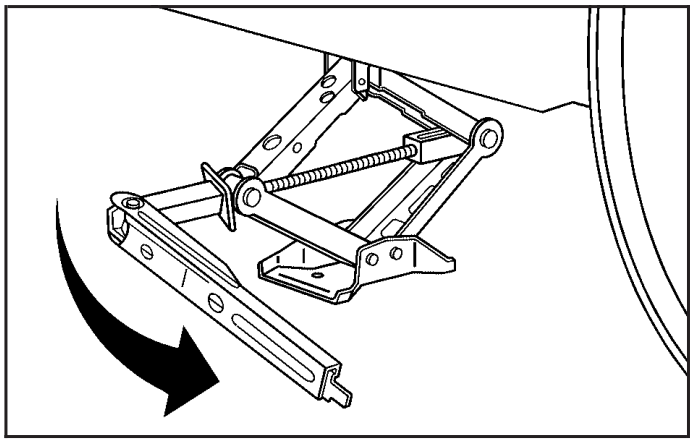

12. Lower the vehicle by turning the wheel wrench counterclockwise. Lower the jack completely.

⚠ CAUTION:

Incorrect wheel nuts or improperly tightened wheel nuts can cause the wheel to come loose and even come off. This could lead to an accident. Be sure to use the correct wheel nuts. If you have to replace them, be sure to get new GM original equipment wheel nuts. Stop somewhere as soon as you can and have the nuts tightened with a torque wrench to the proper torque specification. See *Capacities and Specifications on page 5-105* for wheel nut torque specification.

Notice: **Improperly tightened wheel nuts can lead to brake pulsation and rotor damage. To avoid expensive brake repairs, evenly tighten the wheel nuts in the proper sequence and to the proper torque specification. See *Capacities and Specifications on page 5-105* for the wheel nut torque specification.**

Downloaded from www.Manualslib.com manuals search engine

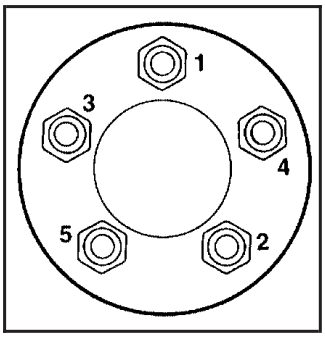

13. Tighten the wheel nuts firmly in a crisscross sequence, as shown, with the wheel wrench.

Notice: **Wheel covers will not fit on your compact spare. If you try to put a wheel cover on the compact spare, you could damage the cover or the spare.**

Do not try to put a wheel cover on your compact spare tire. It will not fit. Store the wheel cover in the trunk until you have the flat repaired or replaced.

Storing a Flat or Spare Tire and Tools

⚠ CAUTION:

Storing a jack, a tire, or other equipment in the passenger compartment of the vehicle could cause injury. In a sudden stop or collision, loose equipment could strike someone. Store all these in the proper place.

All Models (Except GTP and Retractable Hardtop)

To store the flat tire and jack in the compact spare tire compartment, do the following:

1. Open the trunk. See *Trunk on page 2-14* for more information.
2. Remove the bolt extension (in the yellow sleeve) from the jack and remove the center cap from the wheel.

Downloaded from www.Manualslib.com manuals search engine

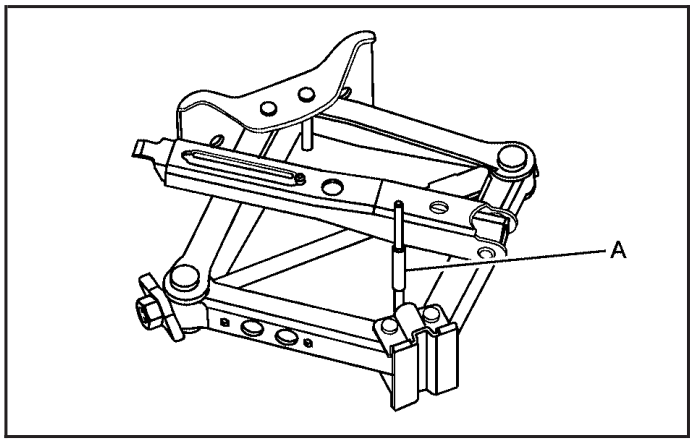

3. Place the jack over the bolt (A) on the floor, making sure it contacts the bolt as shown, and thread the jack retainer nut until it contacts the jack. When reinstalling the jack in the trunk area, ensure that the flat edge with the label is aligned with the rear of the vehicle. If it is not aligned properly, the tire will not fit correctly.
4. With the valve stem up, place the tire on the compartment floor with the rear of the tire beneath the trim panel (tire may not lay completely flat).
5. Line up a wheel nut hole with the bolt or wheel center.
6. With the yellow cap in place to prevent the wheel from being scratched, screw the bolt extension onto the bolt through the wheel nut hole.
7. Remove the yellow cap from the bolt extension.
8. Secure the tire and wheel with the larger wing nut.

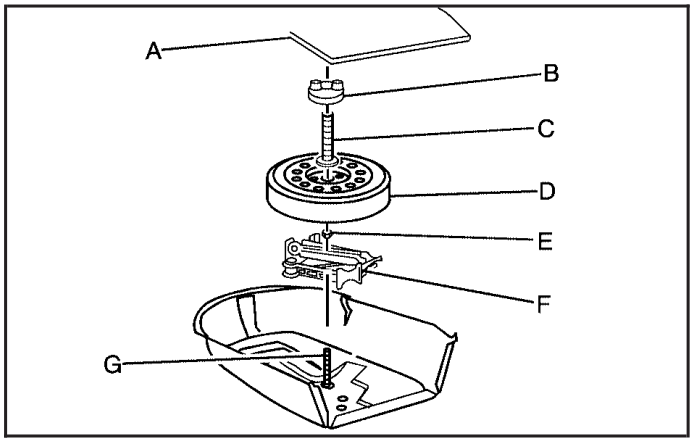

A. Cover
B. Wing Nut
C. Bolt Extension
D. Spare Tire
E. Nut
F. Jack
G. Bolt

Downloaded from www.Manualslib.com manuals search engine

The compact spare is for temporary use only. Replace the compact spare tire with a full-size tire as soon as you can. See *Compact Spare Tire on page 5-86*. See the storage instructions label to replace your compact spare into your trunk properly.

GTP and Retractable Hardtop Models

To store the flat tire and jack in the compact spare tire compartment, do the following:

1. Ensure the retractable hardtop is in the up position.
2. Open the trunk. See *Trunk on page 2-14* for more information.
3. If you have a retractable hardtop model, unlatch the trunk cargo cover so that it is in the open position.
4. Remove the bolt extension (in the yellow sleeve) from the jack and remove the center cap from the wheel.

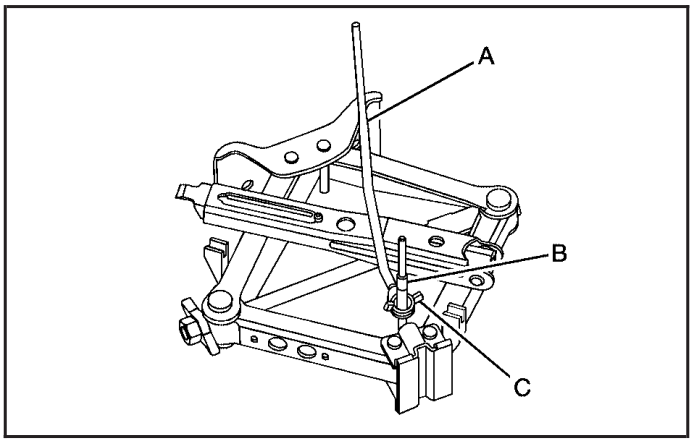

5. Place the jack over the bolt (B) on the floor, making sure it contacts the bolt as shown.
6. Place the extension bolt (A) onto the bolt (B).
7. Thread the jack retainer nut (C) until it is at or near the end of the threads.
8. Reach under the wheel and lift the extension bolt so that the threaded end of the bolt passes through the center hole of the wheel.

Downloaded from www.Manualslib.com manuals search engine

9. Remove the yellow cap.
10. Secure the tire and wheel with the larger wing nut.
11. Replace the cover.

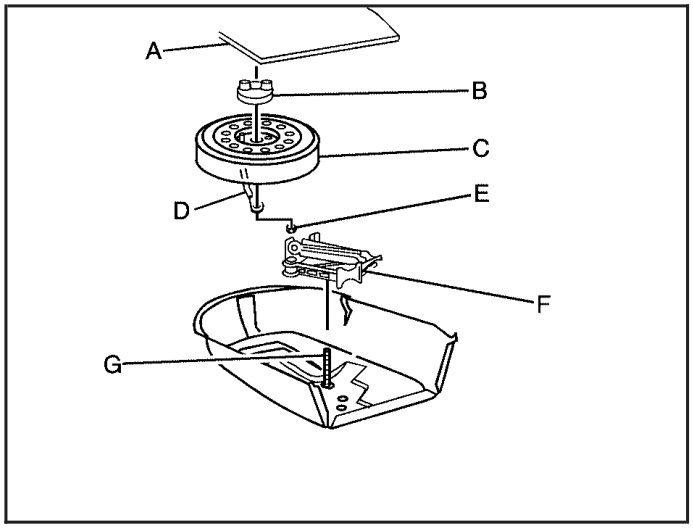

A. Cover
B. Wing Nut
C. Spare Tire
D. Bolt Extension
E. Nut
F. Jack
G. Bolt

The compact spare is for temporary use only. Replace the compact spare tire with a full-size tire as soon as you can. See *Compact Spare Tire on page 5-86*. See the storage instructions label to replace your compact spare into your trunk properly.

Compact Spare Tire

Although the compact spare tire was fully inflated when your vehicle was new, it can lose air after a time. Check the inflation pressure regularly. It should be 60 psi (420 kPa).

After installing the compact spare on your vehicle, you should stop as soon as possible and make sure your spare tire is correctly inflated. The compact spare is made to perform well at speeds up to 65 mph (105 km/h) for distances up to 3,000 miles (5 000 km), so you can finish your trip and have your full-size tire repaired or replaced where you want. Of course, it's best to replace your spare with a full-size tire as soon as you can. Your spare will last longer and be in good shape in case you need it again.

Notice: **When the compact spare is installed, do not take your vehicle through an automatic car wash with guide rails. The compact spare can get caught on the rails. That can damage the tire and wheel, and maybe other parts of your vehicle.**

Downloaded from www.Manualslib.com manuals search engine

Don't use your compact spare on other vehicles.

And don't mix your compact spare tire or wheel with other wheels or tires. They won't fit. Keep your spare tire and its wheel together.

Notice: **Tire chains will not fit your compact spare. Using them can damage your vehicle and can damage the chains too. Do not use tire chains on your compact spare.**

Appearance Care

Cleaning products can be hazardous. Some are toxic. Other cleaning products can burst into flames if a match is struck near them or if they get on a hot part of the vehicle. Some are dangerous if their fumes are inhaled in an enclosed space. When anything from a container is used to clean the vehicle, be sure to follow the manufacturer's warnings and instructions. Always open the doors or windows of the vehicle when cleaning the inside.

Never use these to clean the vehicle:

- Benzene
- Naphtha
- Carbon Tetrachloride
- Acetone
- Paint Thinner
- Turpentine
- Lacquer Thinner
- Nail Polish Remover

They can all be hazardous — some more than others — and they can all damage the vehicle, too.

Do not use any of these products unless this manual says you can. In many uses, these will damage the vehicle:

- Alcohol
- Laundry Soap
- Bleach
- Reducing Agents

Downloaded from www.Manualslib.com manuals search engine

Cleaning the Inside of Your Vehicle

Your vehicle's interior will continue to look its best if it is cleaned often. Although not always visible, dust and dirt can accumulate on your upholstery. Dirt can damage carpet, fabric, leather, and plastic surfaces. Regular vacuuming is recommended to remove particles from your upholstery. It is important to keep your upholstery from becoming and remaining heavily soiled. Soils should be removed as quickly as possible. Your vehicle's interior may experience extremes of heat that could cause stains to set rapidly.

Lighter colored interiors may require more frequent cleaning. Use care because newspapers and garments that transfer color to your home furnishings may also transfer color to your vehicle's interior.

When cleaning your vehicle's interior, only use cleaners specifically designed for the surfaces being cleaned. Permanent damage may result from using cleaners on surfaces for which they were not intended. Use glass cleaner only on glass. Remove any accidental over-spray from other surfaces immediately. To prevent over-spray, apply cleaner directly to the cleaning cloth.

Notice: **If you use abrasive cleaners when cleaning glass surfaces on your vehicle, you could scratch the glass and/or cause damage to the rear window defogger and the integrated radio antenna. When cleaning the glass on your vehicle, use only a soft cloth and glass cleaner.**

Many cleaners contain solvents that may become concentrated in your vehicle's breathing space. Before using cleaners, read and adhere to all safety instructions on the label. While cleaning your vehicle's interior, maintain adequate ventilation by opening your vehicle's doors and windows.

Dust may be removed from small buttons and knobs using a small brush with soft bristles.

Your GM dealer has a product for cleaning your vehicle's glass. Should it become necessary, you can also obtain a product from your GM dealer to remove odors from your vehicle's upholstery.

Do not clean your vehicle using the following cleaners or techniques:

- Never use a knife or any other sharp object to remove a soil from any interior surface.
- Never use a stiff brush. It can cause damage to your vehicle's interior surfaces.
- Never apply heavy pressure or rub aggressively with a cleaning cloth. Use of heavy pressure can damage your interior and does not improve the effectiveness of soil removal.

Downloaded from www.Manualslib.com manuals search engine

- Use only mild, neutral-pH soaps. Avoid laundry detergents or dishwashing soaps with degreasers. Using too much soap will leave a residue that leaves streaks and attracts dirt. For liquid cleaners, about 20 drops per gallon (3.78 L) of water is a good guide.
- Do not heavily saturate your upholstery while cleaning.
- Damage to your vehicle's interior may result from the use of many organic solvents such as naptha, alcohol, etc.

Fabric/Carpet

Use a vacuum cleaner with a soft brush attachment frequently to remove dust and loose dirt. A canister vacuum with a beater bar in the nozzle may only be used on floor carpet and carpeted floor mats. For soils, always try to remove them first with plain water or club soda. Before cleaning, gently remove as much of the soil as possible using one of the following techniques:

- For liquids: gently blot the remaining soil with a paper towel. Allow the soil to absorb into the paper towel until no more can be removed.
- For solid dry soils: remove as much as possible and then vacuum.

To clean, use the following instructions:

1. Saturate a lint-free, clean white cloth with water or club soda.
2. Wring the cloth to remove excess moisture.
3. Start on the outside edge of the soil and gently rub toward the center. Continue cleaning, using a clean area of the cloth each time it becomes soiled.
4. Continue to gently rub the soiled area until the cleaning cloth remains clean.
5. If the soil is not completely removed, use a mild soap solution and repeat the cleaning process that was used with plain water.

If any of the soil remains, a commercial fabric cleaner or spot lifter may be necessary. When a commercial upholstery cleaner or spot lifter is to be used, test a small hidden area for colorfastness first. If the locally cleaned area gives any impression that a ring formation may result, clean the entire surface.

After the cleaning process has been completed, a paper towel can be used to blot excess moisture from the fabric or carpet.

Downloaded from www.Manualslib.com manuals search engine

Leather

A soft cloth dampened with water may be used to remove dust. If a more thorough cleaning is necessary, a soft cloth dampened with a mild soap solution can be used. Allow the leather to dry naturally. Do not use heat to dry. Never use steam to clean leather. Never use spot lifters or spot removers on leather. Many commercial leather cleaners and coatings that are sold to preserve and protect leather may permanently change the appearance and feel of your leather and are not recommended. Do not use silicone or wax-based products, or those containing organic solvents to clean your vehicle's interior because they can alter the appearance by increasing the gloss in a non-uniform manner. Never use shoe polish on your leather.

Instrument Panel, Vinyl, and Other Plastic Surfaces

A soft cloth dampened with water may be used to remove dust. If a more thorough cleaning is necessary, a clean soft cloth dampened with a mild soap solution can be used to gently remove dust and dirt. Never use spot lifters or removers on plastic surfaces. Many commercial cleaners and coatings that are sold to preserve and protect soft plastic surfaces may permanently change the appearance and feel of your interior and are not recommended. Do not use silicone or wax-based products, or those containing organic solvents to clean your vehicle's interior because they can alter the appearance by increasing the gloss in a non-uniform manner.

Some commercial products may increase gloss on your instrument panel. The increase in gloss may cause annoying reflections in the windshield and even make it difficult to see through the windshield under certain conditions.

Downloaded from www.Manualslib.com manuals search engine

Care of Safety Belts

Keep belts clean and dry.

> ⚠ **CAUTION:**
>
> **Do not bleach or dye safety belts. If you do, it may severely weaken them. In a crash, they might not be able to provide adequate protection. Clean safety belts only with mild soap and lukewarm water.**

Weatherstrips

Silicone grease on weatherstrips will make them last longer, seal better, and not stick or squeak. Apply silicone grease with a clean cloth. During very cold, damp weather frequent application may be required. See *Recommended Fluids and Lubricants on page 6-12*.

Washing Your Vehicle

The paint finish on the vehicle provides beauty, depth of color, gloss retention, and durability.

The best way to preserve the vehicle's finish is to keep it clean by washing it often with lukewarm or cold water.

Do not wash the vehicle in the direct rays of the sun. Use a car washing soap. Do not use strong soaps or chemical detergents. Be sure to rinse the vehicle well, removing all soap residue completely. GM-approved cleaning products can be obtained from your dealer. See *Vehicle Care/Appearance Materials on page 5-95*. Do not use cleaning agents that are petroleum based, or that contain acid or abrasives. All cleaning agents should be flushed promptly and not allowed to dry on the surface, or they could stain. Dry the finish with a soft, clean chamois or an all-cotton towel to avoid surface scratches and water spotting.

High pressure car washes may cause water to enter the vehicle.

Cleaning Exterior Lamps/Lenses

Use only lukewarm or cold water, a soft cloth and a car washing soap to clean exterior lamps and lenses. Follow instructions under *Washing Your Vehicle on page 5-91*.

Downloaded from www.Manualslib.com manuals search engine

Finish Care

Occasional waxing or mild polishing of the vehicle by hand may be necessary to remove residue from the paint finish. GM-approved cleaning products can be obtained from your dealer. See *Vehicle Care/Appearance Materials on page 5-95*.

Notice: **Machine compounding or aggressive polishing on a basecoat/clearcoat paint finish may damage it. Use only non-abrasive waxes and polishes that are made for a basecoat/clearcoat paint finish on your vehicle.**

The vehicle has a “basecoat/clearcoat” paint finish. The clearcoat gives more depth and gloss to the colored basecoat. Always use waxes and polishes that are non-abrasive and made for a basecoat/clearcoat paint finish.

Foreign materials such as calcium chloride and other salts, ice melting agents, road oil and tar, tree sap, bird droppings, chemicals from industrial chimneys, etc., can damage the vehicle’s finish if they remain on painted surfaces. Wash the vehicle as soon as possible. If necessary, use non-abrasive cleaners that are marked safe for painted surfaces to remove foreign matter.

Exterior painted surfaces are subject to aging, weather, and chemical fallout that can take their toll over a period of years. To help keep the paint finish looking new, keep the vehicle in a garage or covered whenever possible.

Windshield and Wiper Blades

If the windshield is not clear after using the windshield washer, or if the wiper blade chatters when running, wax, sap, or other material may be on the blade or windshield.

Clean the outside of the windshield with a glass cleaning liquid or powder and water solution. The windshield is clean if beads do not form when it is rinsed with water.

Grime from the windshield will stick to the wiper blades and affect their performance. Clean the blade by wiping vigorously with a cloth soaked in full-strength windshield washer solvent. Then rinse the blade with water.

Check the wiper blades and clean them as necessary; replace blades that look worn.

Downloaded from www.Manualslib.com manuals search engine

Aluminum Wheels

Notice: **If you use strong soaps, chemicals, abrasive polishes, cleaners, brushes, or cleaners that contain acid on aluminum or chrome-plated wheels, you could damage the surface of the wheel(s). The repairs would not be covered by your warranty. Use only GM-approved cleaners on aluminum or chrome-plated wheels.**

Keep the wheels clean using a soft clean cloth with mild soap and water. Rinse with clean water. After rinsing thoroughly, dry with a soft clean towel. A wax may then be applied.

Notice: **Using chrome polish on aluminum wheels could damage the wheels. The repairs would not be covered by your warranty. Use chrome polish on chrome wheels only.**

The surface of these wheels is similar to the painted surface of the vehicle. Do not use strong soaps, chemicals, abrasive polishes, abrasive cleaners, cleaners with acid, or abrasive cleaning brushes on them because the surface could be damaged.
Do not use chrome polish on aluminum wheels.

Notice: **If you drive your vehicle through an automatic car wash that has silicone carbide tire cleaning brushes, you could damage the aluminum or chrome-plated wheels. The repairs would not be covered by your warranty. Never drive a vehicle equipped with aluminum or chrome-plated wheels through an automatic car wash that uses silicone carbide tire cleaning brushes.**

Do not take the vehicle through an automatic car wash that has silicone carbide tire cleaning brushes. These brushes can also damage the surface of these wheels.

Tires

To clean the tires, use a stiff brush with tire cleaner.

Notice: **Using petroleum-based tire dressing products on your vehicle may damage the paint finish and/or tires. When applying a tire dressing, always wipe off any overspray from all painted surfaces on your vehicle.**

Downloaded from www.Manualslib.com manuals search engine

Sheet Metal Damage

If the vehicle is damaged and requires sheet metal repair or replacement, make sure the body repair shop applies anti-corrosion material to parts repaired or replaced to restore corrosion protection.

Original manufacturer replacement parts will provide the corrosion protection while maintaining the warranty.

Finish Damage

Any stone chips, fractures or deep scratches in the finish should be repaired right away. Bare metal will corrode quickly and may develop into major repair expense.

Minor chips and scratches can be repaired with touch-up materials available from your GM dealer. Larger areas of finish damage can be corrected in your GM dealer's body and paint shop.

Underbody Maintenance

Chemicals used for ice and snow removal and dust control can collect on the underbody. If these are not removed, corrosion and rust can develop on the underbody parts such as fuel lines, frame, floor pan, and exhaust system even though they have corrosion protection.

At least every spring, flush these materials from the underbody with plain water. Clean any areas where mud and debris can collect. Dirt packed in close areas of the frame should be loosened before being flushed. Your dealer or an underbody car washing system can do this for you.

Chemical Paint Spotting

Some weather and atmospheric conditions can create a chemical fallout. Airborne pollutants can fall upon and attack painted surfaces on the vehicle. This damage can take two forms: blotchy, ring-shaped discolorations, and small, irregular dark spots etched into the paint surface.

Although no defect in the paint job causes this, GM will repair, at no charge to the owner, the surfaces of new vehicles damaged by this fallout condition within 12 months or 12,000 miles (20 000 km) of purchase, whichever occurs first.

Downloaded from www.Manualslib.com manuals search engine

Vehicle Care/Appearance Materials

Description	Usage
Polishing Cloth Wax-Treated	Interior and exterior polishing cloth.
Tar and Road Oil Remover	Removes tar, road oil, and asphalt.
Chrome Cleaner and Polish	Use on chrome or stainless steel.
White Sidewall Tire Cleaner	Removes soil and black marks from whitewalls.
Vinyl Cleaner	Cleans vinyl.
Glass Cleaner	Removes dirt, grime, smoke and fingerprints.
Chrome and Wire Wheel Cleaner	Removes dirt and grime from chrome wheels and wire wheel covers.
Finish Enhancer	Removes dust, fingerprints, and surface contaminants. Spray on and wipe off.

Description	Usage
Swirl Remover Polish	Removes swirl marks, fine scratches, and other light surface contamination.
Cleaner Wax	Removes light scratches and protects finish.
Foaming Tire Shine Low Gloss	Cleans, shines, and protects in one step. No wiping necessary.
Wash Wax Concentrate	Medium foaming shampoo. Cleans and lightly waxes. Biodegradable and phosphate free.
Spot Lifter	Quickly removes spots and stains from carpets, vinyl, and cloth upholstery.
Odor Eliminator	Odorless spray odor eliminator used on fabrics, vinyl, leather and carpet.

Downloaded from www.Manualslib.com manuals search engine

Vehicle Identification

Vehicle Identification Number (VIN)

This is the legal identifier for your vehicle. It appears on a plate in the front corner of the instrument panel, on the driver's side. You can see it if you look through the windshield from outside your vehicle. The VIN also appears on the Vehicle Certification and Service Parts labels and the certificates of title and registration.

Engine Identification

The eighth character in the VIN is the engine code. This code will help you identify your vehicle's engine, specifications, and replacement parts.

Service Parts Identification Label

You will find this label on the inside of the glove box. It is very helpful if you ever need to order parts. On this label, you will find the following:

- VIN
- Model designation
- Paint information
- Production options and special equipment

Be sure that this label is not removed from the vehicle.

Downloaded from www.Manualslib.com manuals search engine

Electrical System

Add-On Electrical Equipment

Notice: **Don't add anything electrical to your vehicle unless you check with your dealer first. Some electrical equipment can damage your vehicle and the damage wouldn't be covered by your warranty. Some add-on electrical equipment can keep other components from working as they should.**

Your vehicle has an airbag system. Before attempting to add anything electrical to your vehicle, see *Servicing Your Airbag-Equipped Vehicle on page 1-70*.

Windshield Wiper Fuses

The windshield wiper motor is protected by an internal circuit breaker and a fuse. If the motor overheats due to heavy snow, etc., the wiper will stop until the motor cools. If the overload is caused by some electrical problem, have it fixed.

Power Windows and Other Power Options

Fuses in the fuse block protect the power windows. When the current load is too heavy, the fuse opens protecting the circuit until the problem is fixed.

Fuses

The wiring circuits in your vehicle are protected from short circuits by a combination of fuses, circuit breakers and fusible links. This greatly reduces the chance of damage caused by electrical problems.

Look at the silver-colored band inside the fuse. If the band is broken or melted, replace the fuse. Be sure to replace a bad fuse with a new one of the identical size and rating.

There are three fuse blocks in your vehicle: one in the center of the instrument panel, one in the engine compartment and one in the trunk.

There is a fuse puller located on the instrument panel fuse block. It can be used to easily remove fuses from the fuse block.

Downloaded from www.Manualslib.com manuals search engine

Instrument Panel Fuse Block

The instrument panel fuse block is located on the passenger's side of the vehicle, on the lower portion of the instrument panel console near the floor.

Remove the console cover to access the fuse block, then remove the fuse block cover to access the fuses.

Your vehicle may not be equipped with all the fuses and features listed.

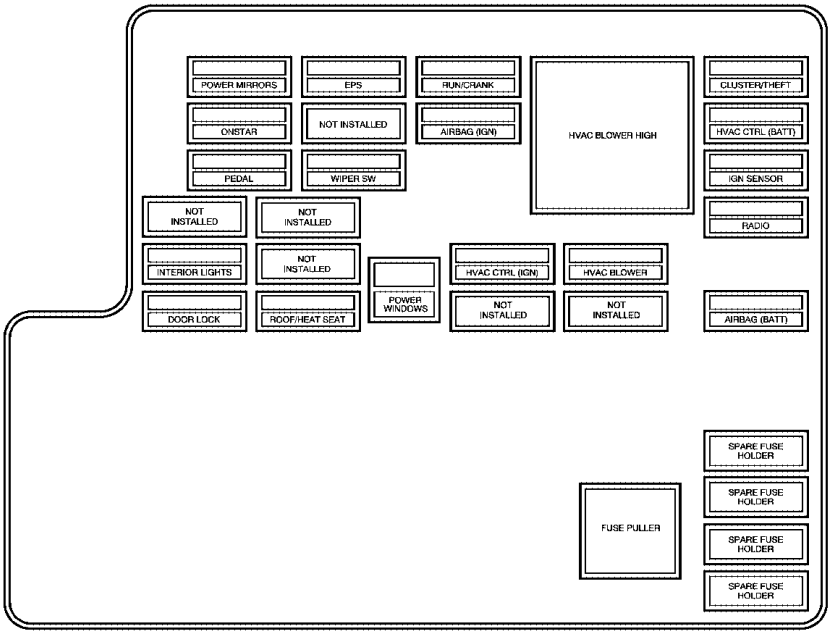

Downloaded from www.Manualslib.com manuals search engine

Fuses	Usage
POWER MIRRORS	Power Mirrors
EPS	Electric Power Steering
RUN/CRANK	Cruise Control Switch, Passenger Airbag Status Indicator, DSC Switch
HVAC BLOWER HIGH	Heating Ventilation Air Conditioning Blower - High Speed Relay
CLUSTER/ THEFT	Instrument Panel Cluster, Theft Deterrent System
ONSTAR	OnStar®
NOT INSTALLED	Not Used
AIRBAG (IGN)	Airbag (Ignition)
HVAC CTRL (BATT)	Heating Ventilation Air Conditioning Control Diagnostic Link Connector (Battery)
PEDAL	Adjustable Pedals
WIPER SW	Windshield Wiper/Washer Switch
IGN SENSOR	Ignition Switch
NOT INSTALLED	Not Used
NOT INSTALLED	Not Used
RADIO	Audio System
INTERIOR LIGHTS	Interior Lamps

Fuses	Usage
NOT INSTALLED	Not Used
POWER WINDOWS	Power Windows (Sedan)
HVAC CTRL (IGN)	Heating Ventilation Air Conditioning Control (Ignition)
HVAC BLOWER	Heating Ventilation Air Conditioning Blower Switch
DOOR LOCK	Door Locks
ROOF/HEAT SEAT	Sunroof, Heated Seat, Power Windows (Coupe, Retractable Hardtop)
NOT INSTALLED	Not Used
NOT INSTALLED	Not Used
AIRBAG (BATT)	Airbag (Battery)
SPARE FUSE HOLDER	Spare Fuse Holder
SPARE FUSE HOLDER	Spare Fuse Holder
SPARE FUSE HOLDER	Spare Fuse Holder
SPARE FUSE HOLDER	Spare Fuse Holder
FUSE PULLER	Fuse Puller

Downloaded from www.Manualslib.com manuals search engine

Engine Compartment Fuse Block

Your vehicle may not be equipped with all the fuses and features listed.

The engine compartment fuse block is located on the driver's side of the engine compartment, near the battery.

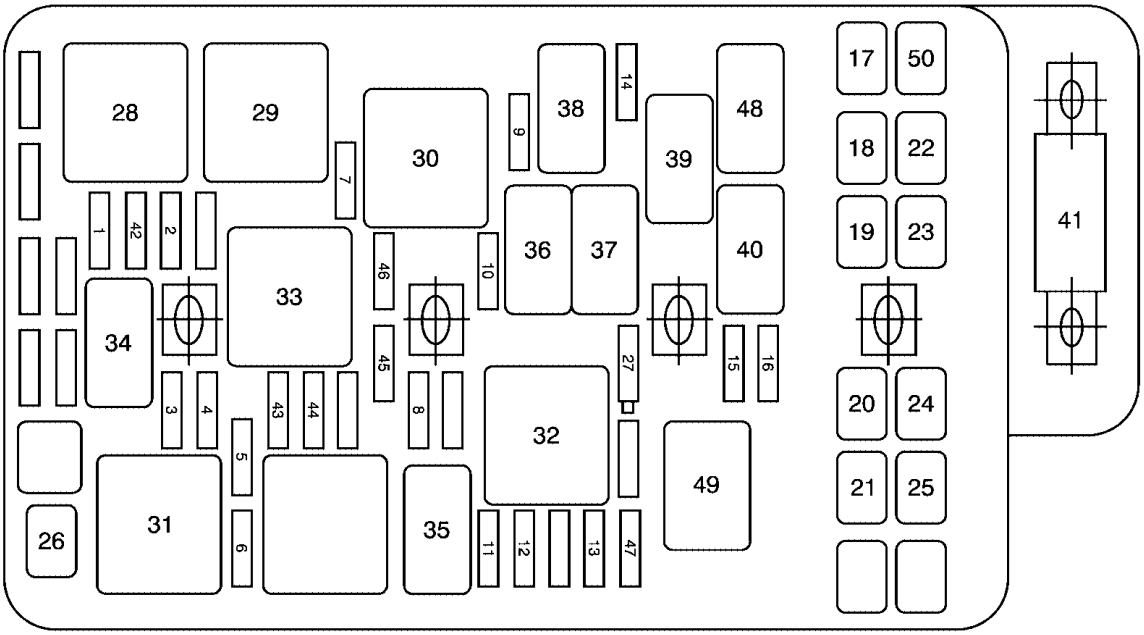

Downloaded from www.Manualslib.com manuals search engine

Fuses	Usage
1	Air Conditioner Clutch
2	Electronic Throttle Control
3	Ignition 1 Module, Starter
4	Transaxle, Transmission Control Module Ignition 1
5	Injector
6	Emission
7	Left Headlamp Low Beam
8	Horn
9	Right Headlamp Low Beam
10	Front Fog Lamps
11	Left Headlamp High Beam
12	Right Headlamp High Beam
13	Powertrain Control Module Battery
14	Windshield Wiper
15	Anti-lock Brake System (IGN 1)
16	Powertrain Control Module (Ignition 1)
17	Cooling Fan 1
18	Cooling Fan 2

Fuses	Usage
19	Run Relay, Heating, Ventilation, Air Conditioning Blower
20	Body Control Module 1
21	Body Control Module Run/Crank
22	Rear Electrical Center 1
23	Rear Electrical Center 2
24	Anti-lock Brake System
25	Body Control Module 2
26	Starter
41	Electric Power Steering
42	Transmission Control Module Battery
43	Ignition Module
44	Injectors
45	Intake Tuning Valve
46	Daytime Running Lamps
47	Center High-Mounted Stoplamp
50	Front Power Windows Coupe/Retractable Hardtop

Downloaded from www.Manualslib.com manuals search engine

Relays	Usage
28	Cooling Fan 1
29	Cooling Fan Series/Parallel
30	Cooling Fan 2
31	Starter
32	Run/Crank, Ignition
33	Powertrain
34	Air Conditioning Clutch
35	High Beam
36	Front Fog Lamps
37	Horn
38	Low Beam
39	Windshield Wiper 1
40	Windshield Wiper 2
48	Daytime Running Lamps
49	Center High-Mounted Stoplamp

Diodes	Usage
27	Wiper

Rear Compartment Fuse Block

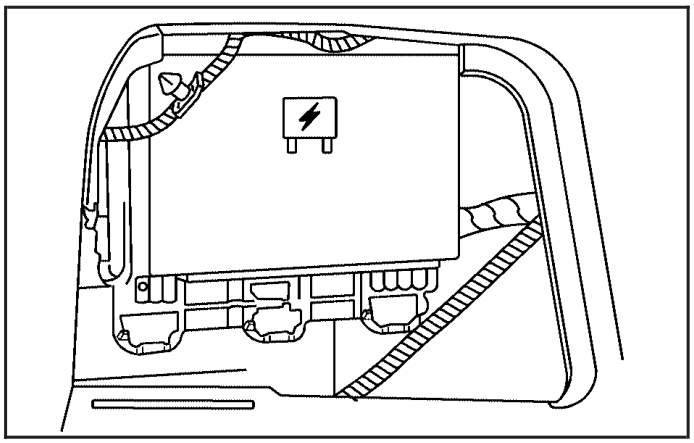

The rear compartment fuse block is located in the trunk of the vehicle. Access the fuse block through the trunk panel on the driver's side of the rear cargo area.

Downloaded from www.Manualslib.com manuals search engine

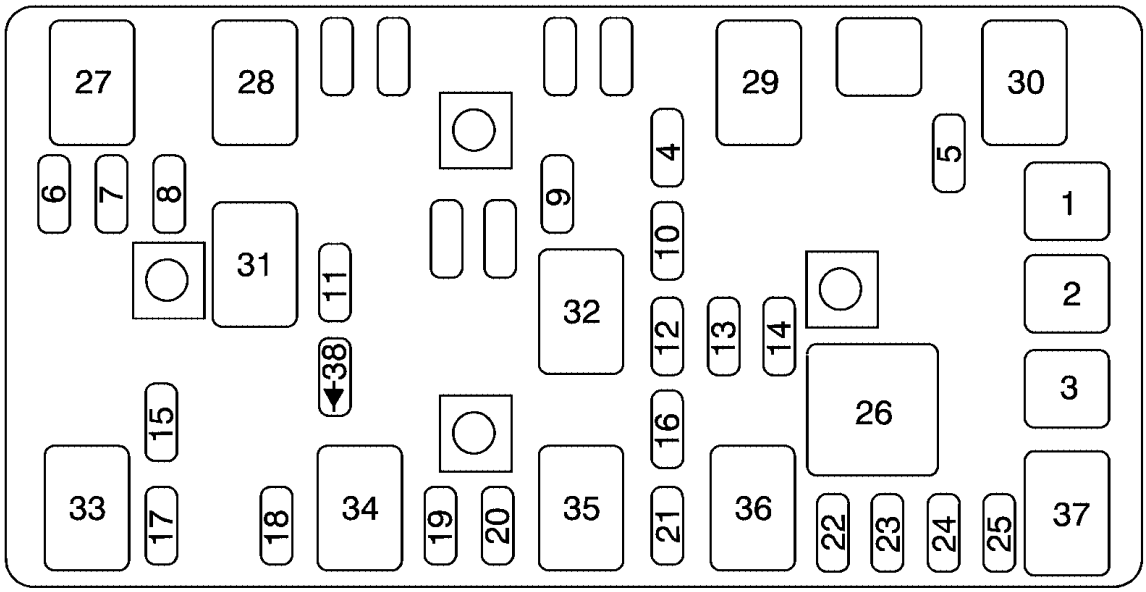

Fuses	Usage
1	Rear Quarter Windows
2	Driver Seat Controls
3	Folding Top
4	Not Used

Fuses	Usage
5	Emission 2, Canister Vent Solenoid
6	Park Lamps, Instrument Panel Dimming
7	Not Used

Downloaded from www.Manualslib.com manuals search engine

Fuses	Usage
8	Not Used
9	Sliding Panel Roof
10	Sunroof Controls
11	Not Used
12	Retractable Hardtop Controller
13	Audio Amplifier
14	Heated Seat Controls
15	Not Used
16	Remote Keyless Entry System, XM Satellite Radio
17	Back-up Lamps
18	Not Used
19	Not Used
20	Cigarette Lighter, Auxiliary Power Outlet
21	Not Used
22	Trunk Release
23	Rear Defog

Fuses	Usage
24	Not Used
25	Fuel Pump

Relays	Usage
26	Rear Window Defogger
27	Park Lamps
28	Not Used
29	Not Used
30	Not Used
31	Not Used
32	Not Used
33	Back-up Lamps
34	Not Used
35	Not Used
36	Trunk Release
37	Fuel Pump
38 (Diode)	Cargo Lamp

Downloaded from www.Manualslib.com manuals search engine

Capacities and Specifications

The following approximate capacities are given in English and metric conversions. See *Recommended Fluids and Lubricants on page 6-12* for more information.

Application	Capacities	
	English	Metric
Automatic Transaxle		
4T65-E Transaxle	7.4 qt	7.0 L
4T45-E Transaxle	7.4 qt	7.0 L
F40 6 Speed Manual Transaxle	3.1 qt	2.9 L
Cooling System	9.6 qt	9.4 L
2.4L Engine	9.9 qt	9.4 L
3.5L Engine	7.7 qt	7.3 L
3.9L Engine	9.8 qt	9.3 L
Engine Oil with Filter		
2.4L Engine	5.0 qt	4.7 L
3.5L Engine	4.0 qt	3.8 L
3.9L Engine	4.0 qt	3.8 L
Fuel Tank	16.3 gal	61.7 L
Wheel Nut Torque	100 lb ft	140 N•m
All capacities are approximate. When adding, be sure to fill to the appropriate level, as recommended in this manual.		

Downloaded from www.Manualslib.com manuals search engine

Engine Specifications

Engine	VIN Code	Transaxle	Spark Plug Gap
2.4L L4 Engine	B	Automatic	0.042 inches (1.06 mm)
3.5L V6 Engine	8	Automatic	0.060 inches (1.52 mm)
3.9L V6 Engine	1	Automatic Manual	0.043 inches (1.10 mm)

Downloaded from www.Manualslib.com manuals search engine

Section 6 Maintenance Schedule

Maintenance Schedule 6-2
Introduction 6-2
Maintenance Requirements 6-2
Your Vehicle and the Environment 6-2
Using the Maintenance Schedule 6-3
Scheduled Maintenance 6-4
Additional Required Services 6-6
Maintenance Footnotes 6-7
Owner Checks and Services 6-8
At Each Fuel Fill 6-8
At Least Once a Month 6-9
At Least Once a Year 6-9
Recommended Fluids and Lubricants 6-12
Normal Maintenance Replacement Parts 6-13
Maintenance Record 6-14

Downloaded from www.Manualslib.com manuals search engine

Maintenance Schedule

Introduction

Important: Keep engine oil at the proper level and change as recommended.

Have you purchased the GM Protection Plan? The Plan supplements your new vehicle warranties. See your Warranty and Owner Assistance booklet or your dealer for details.

Maintenance Requirements

Notice: **Maintenance intervals, checks, inspections, replacement parts, and recommended fluids and lubricants as prescribed in this manual are necessary to keep your vehicle in good working condition. Any damage caused by failure to follow scheduled maintenance may not be covered by warranty.**

Your Vehicle and the Environment

Proper vehicle maintenance not only helps to keep your vehicle in good working condition, but also helps the environment. All recommended maintenance is important. Improper vehicle maintenance can even affect the quality of the air we breathe. Improper fluid levels or the wrong tire inflation can increase the level of emissions from your vehicle. To help protect our environment, and to keep your vehicle in good condition, be sure to maintain your vehicle properly.

Downloaded from www.Manualslib.com manuals search engine

Using the Maintenance Schedule

We at General Motors want to help you keep your vehicle in good working condition. But we do not know exactly how you will drive it. You may drive very short distances only a few times a week. Or you may drive long distances all the time in very hot, dusty weather. You may use your vehicle in making deliveries. Or you may drive it to work, to do errands, or in many other ways.

Because of all the different ways people use their vehicles, maintenance needs vary. You may need more frequent checks and replacements. So please read the following and note how you drive. If you have any questions on how to keep your vehicle in good condition, see your GM Goodwrench® dealer.

This schedule is for vehicles that:

- carry passengers and cargo within recommended limits. You will find these limits on the tire and loading information label. See *Loading Your Vehicle on page 4-33*.
- are driven on reasonable road surfaces within legal driving limits.
- use the recommended fuel. See *Gasoline Octane on page 5-5*.

The services in *Scheduled Maintenance on page 6-4* should be performed when indicated. See *Additional Required Services on page 6-6* and *Maintenance Footnotes on page 6-7* for further information.

⚠ CAUTION:

Performing maintenance work on a vehicle can be dangerous. In trying to do some jobs, you can be seriously injured. Do your own maintenance work only if you have the required know-how and the proper tools and equipment for the job. If you have any doubt, see your GM Goodwrench® dealer to have a qualified technician do the work.

Some maintenance services can be complex. So, unless you are technically qualified and have the necessary equipment, you should have your GM Goodwrench® dealer do these jobs.

When you go to your GM Goodwrench® dealer for your service needs, you will know that GM-trained and supported service technicians will perform the work using genuine GM parts.

If you want to purchase service information, see *Service Publications Ordering Information on page 7-11*.

Downloaded from www.Manualslib.com manuals search engine

Owner Checks and Services on page 6-8 tells you what should be checked, when to check it, and what you can easily do to help keep your vehicle in good condition.

The proper replacement parts, fluids, and lubricants to use are listed in *Recommended Fluids and Lubricants on page 6-12* and *Normal Maintenance Replacement Parts on page 6-13*. When your vehicle is serviced, make sure these are used. All parts should be replaced and all necessary repairs done before you or anyone else drives the vehicle. We recommend the use of genuine GM parts.

Scheduled Maintenance

When the Change Oil Soon message in the Driver Information Center (DIC) comes on, it means that service is required for your vehicle. Have your vehicle serviced as soon as possible within the next 600 miles (1 000 km). It is possible that, if you are driving under the best conditions, the engine oil life system may not indicate that vehicle service is necessary for over a year. However, your engine oil and filter must be changed at least once a year and at this time the system must be reset. Your GM Goodwrench® dealer has GM-trained service technicians who will perform this work using genuine GM parts and reset the system.

If the engine oil life system is ever reset accidentally, you must service your vehicle within 3,000 miles (5 000 km) since your last service. Remember to reset the oil life system whenever the oil is changed. See *Engine Oil Life System on page 5-20* for information on the Engine Oil Life System and resetting the system.

When the Change Oil Soon message appears, certain services, checks, and inspections are required. Required services are described in the following for "Maintenance I" and "Maintenance II." Generally, it is recommended that your first service be Maintenance I, your second service be Maintenance II, and that you alternate Maintenance I and Maintenance II thereafter. However, in some cases, Maintenance II may be required more often.

Maintenance I — Use Maintenance I if the message comes on within 10 months since the vehicle was purchased or Maintenance II was performed.

Maintenance II — Use Maintenance II if the previous service performed was Maintenance I. Always use Maintenance II whenever the message comes on 10 months or more since the last service or if the message has not come on at all for one year.

Downloaded from www.Manualslib.com manuals search engine

Scheduled Maintenance

Service	Maintenance I	Maintenance II
Change engine oil and filter. See *Engine Oil on page 5-17*. Reset oil life system. See *Engine Oil Life System on page 5-20*. *An Emission Control Service.*	•	•
Visually check for any leaks or damage. *See footnote (j).*	•	•
Inspect engine air cleaner filter. If necessary, replace filter. See *Engine Air Cleaner/Filter on page 5-22*. *See footnote (k).*		•
Rotate tires and check inflation pressures and wear. See *Tire Inspection and Rotation on page 5-66* and “Tire Wear Inspection” in *At Least Once a Month on page 6-9*.	•	•
Inspect brake system. *See footnote (a).*	•	•
Check engine coolant and windshield washer fluid levels and add fluid as needed.	•	•
Perform any needed additional services. See “Additional Required Services” in this section.	•	•
Inspect suspension and steering components. *See footnote (b).*		•
Inspect engine cooling system. *See footnote (c).*		•
Inspect wiper blades. *See footnote (d).*		•
Inspect restraint system components. *See footnote (e).*		•
Lubricate body components. *See footnote (f).*		•
Inspect throttle system. *See footnote (g).*		•

Downloaded from www.Manualslib.com manuals search engine

Additional Required Services

The following services should be performed at the first maintenance service (I or II) after the indicated miles (kilometers) shown for each item.

Additional Required Services

Service and Miles (Kilometers)	25,000 (41 500)	50,000 (83 000)	75,000 (125 000)	100,000 (166 000)	125,000 (207 500)	150,000 (240 000)
Inspect fuel system for damage or leaks.	•	•	•	•	•	•
Inspect exhaust system for loose or damaged components.	•	•	•	•	•	•
Replace engine air cleaner filter. See *Engine Air Cleaner/Filter on page 5-22*.		•		•		•
Change automatic transaxle fluid and filter (severe service only). *See footnote (h).*		•		•		•
Replace spark plugs. Inspect spark plug wires. *An Emission Control Service.*				•		
Engine cooling system service (or every five years, whichever occurs first). *An Emission Control Service. See footnote (i).*						•
Inspect engine accessory drive belt. *An Emission Control Service. See footnote (m).*						•

Downloaded from www.Manualslib.com manuals search engine

Maintenance Footnotes

(a) *Visually inspect brake lines and hoses for proper hook-up, binding, leaks, cracks, chafing, etc. Inspect disc brake pads for wear and rotors for surface condition. Inspect other brake parts, including calipers, parking brake, etc.*

(b) *Visually inspect front and rear suspension and steering system for damaged, loose, or missing parts or signs of wear. Inspect power steering lines and hoses for proper hook-up, binding, leaks, cracks, chafing, etc.*

(c) *Visually inspect hoses and have them replaced if they are cracked, swollen, or deteriorated. Inspect all pipes, fittings and clamps; replace with genuine GM parts as needed. To help ensure proper operation, a pressure test of the cooling system and pressure cap and cleaning the outside of the radiator and air conditioning condenser is recommended at least once a year.*

(d) *Visually inspect wiper blades for wear or cracking. Replace blades that appear worn or damaged or that streak or miss areas of the windshield.*

(e) *Make sure the safety belt reminder light and all your belts, buckles, latch plates, retractors, and anchorages are working properly. Look for any other loose or damaged safety belt system parts. If you see anything that might keep a safety belt system from doing its job, have it repaired. Have any torn or frayed safety belts replaced. Also look for any opened or broken airbag coverings, and have them repaired or replaced. The airbag system does not need regular maintenance.*

(f) *Lubricate all key lock cylinders, door hinges and latches, hood hinges and latches, and trunk lid hinges and latches. More frequent lubrication may be required when exposed to a corrosive environment. Applying silicone grease on weatherstrips with a clean cloth will make them last longer, seal better, and not stick or squeak.*

(g) *Check system for interference or binding and for damaged or missing parts. Replace parts as needed. Replace any components that have high effort or excessive wear. Do not lubricate accelerator or cruise control cables.*

Downloaded from www.Manualslib.com manuals search engine

(h) *Change automatic transaxle fluid and filter if the vehicle is mainly driven under one or more of these conditions:*

- *In heavy city traffic where the outside temperature regularly reaches 90°F (32°C) or higher.*
- *In hilly or mountainous terrain.*
- *When doing frequent trailer towing.*
- *Uses such as found in taxi, police, or delivery service.*

If you do not use your vehicle under any of these conditions, the fluid and filter do not require changing.

(i) *Drain, flush, and refill cooling system. This service can be complex; you should have your dealer perform this service. See Engine Coolant on page 5-27 for what to use. Inspect hoses. Clean radiator, condenser, pressure cap, and filler neck. Pressure test the cooling system and pressure cap.*

(j) *A fluid loss in any vehicle system could indicate a problem. Have the system inspected and repaired and the fluid level checked. Add fluid if needed.*

(k) *If you drive regularly under dusty conditions, inspect the filter at each engine oil change.*

(m) *Visually inspect belt for fraying, excessive cracks, or obvious damage. Replace belt if necessary.*

Owner Checks and Services

These owner checks and services should be performed at the intervals specified to help ensure the safety, dependability and emission control performance of your vehicle. Your GM Goodwrench® dealer can assist you with these checks and services.

Be sure any necessary repairs are completed at once. Whenever any fluids or lubricants are added to your vehicle, make sure they are the proper ones, as shown in *Recommended Fluids and Lubricants on page 6-12*.

At Each Fuel Fill

It is important to perform these underhood checks at each fuel fill.

Engine Oil Level Check

Check the engine oil level and add the proper oil if necessary. See *Engine Oil on page 5-17* for further details.

Notice: **It is important to check your oil regularly and keep it at the proper level. Failure to keep your engine oil at the proper level can cause damage to your engine not covered by your warranty.**

Downloaded from www.Manualslib.com manuals search engine

Engine Coolant Level Check

Check the engine coolant level and add DEX-COOL® coolant mixture if necessary. See *Engine Coolant on page 5-27* for further details.

Windshield Washer Fluid Level Check

Check the windshield washer fluid level in the windshield washer tank and add the proper fluid if necessary.

At Least Once a Month

Tire Inflation Check

Visually inspect your vehicle's tires and make sure they are inflated to the correct pressures. Do not forget to check the spare tire. See *Tires on page 5-57* for further details. Check to make sure the spare tire is stored securely. See *Changing a Flat Tire on page 5-74*.

Tire Wear Inspection

Tire rotation may be required for high mileage highway drivers prior to the Engine Oil Life System service notification. Check the tires for wear and, if necessary, rotate the tires. See *Tire Inspection and Rotation on page 5-66*.

At Least Once a Year

Starter Switch Check

⚠ CAUTION:

When you are doing this inspection, the vehicle could move suddenly. If the vehicle moves, you or others could be injured.

1. Before you start, be sure you have enough room around the vehicle.
2. Firmly apply both the parking brake and the regular brake. See *Parking Brake on page 2-33*.

   Do not use the accelerator pedal, and be ready to turn off the engine immediately if it starts.
3. On automatic transaxle vehicles, try to start the engine in each gear. The vehicle should start only in PARK (P) or NEUTRAL (N). If the vehicle starts in any other position, contact your GM Goodwrench® dealer for service.

Downloaded from www.Manualslib.com manuals search engine

On manual transaxle vehicles, put the shift lever in NEUTRAL (N), push the clutch pedal down halfway, and try to start the engine. The vehicle should start only when the clutch pedal is pushed down all the way to the floor. If the vehicle starts when the clutch is not pushed all the way down, contact your GM Goodwrench® dealer for service.

Automatic Transaxle Shift Lock Control System Check

⚠ CAUTION:

When you are doing this inspection, the vehicle could move suddenly. If the vehicle moves, you or others could be injured.

1. Before you start, be sure you have enough room around the vehicle. It should be parked on a level surface.
2. Firmly apply the parking brake. See *Parking Brake on page 2-33*.

   Be ready to apply the regular brake immediately if the vehicle begins to move.
3. With the engine off, turn the ignition to ON, but do not start the engine. Without applying the regular brake, try to move the shift lever out of PARK (P) with normal effort. If the shift lever moves out of PARK (P), contact your GM Goodwrench® dealer for service.

Ignition Automatic Transaxle Lock Check

While parked, and with the parking brake set, try to turn the ignition to OFF in each shift lever position.

- The ignition should turn to OFF only when the shift lever is in PARK (P).
- The key should come out only in OFF.

Contact your GM Goodwrench® dealer if service is required.

Downloaded from www.Manualslib.com manuals search engine

Parking Brake and Automatic Transaxle Park (P) Mechanism Check

⚠ CAUTION:

When you are doing this check, your vehicle could begin to move. You or others could be injured and property could be damaged. Make sure there is room in front of your vehicle in case it begins to roll. Be ready to apply the regular brake at once should the vehicle begin to move.

Park on a fairly steep hill, with the vehicle facing downhill. Keeping your foot on the regular brake, set the parking brake.

- To check the parking brake's holding ability: With the engine running and transaxle in NEUTRAL (N), slowly remove foot pressure from the regular brake pedal. Do this until the vehicle is held by the parking brake only.
- To check the PARK (P) mechanism's holding ability: With the engine running, shift to PARK (P). Then release the parking brake followed by the regular brake.

Contact your GM Goodwrench® dealer if service is required.

Underbody Flushing Service

At least every spring, use plain water to flush any corrosive materials from the underbody. Take care to clean thoroughly any areas where mud and other debris can collect.

Downloaded from www.Manualslib.com manuals search engine

Recommended Fluids and Lubricants

Fluids and lubricants identified below by name, part number, or specification may be obtained from your dealer.

Usage	Fluid/Lubricant
Engine Oil	Engine oil which meets GM Standard GM6094M and displays the American Petroleum Institute Certified for Gasoline Engines starburst symbol. GM Goodwrench® oil meets all the requirements for your vehicle. To determine the proper viscosity for your vehicle's engine, see *Engine Oil on page 5-17*.
Engine Coolant	50/50 mixture of clean, drinkable water and use only DEX-COOL® Coolant. See *Engine Coolant on page 5-27*.
Hydraulic Brake System	Delco® Supreme 11 Brake Fluid or equivalent DOT-3 brake fluid.
Windshield Washer	GM Optikleen® Washer Solvent.
Hydraulic Clutch System	Hydraulic Clutch Fluid (GM Part No. U.S. 12345347, in Canada 10953517) or equivalent DOT-3 brake fluid.

Usage	Fluid/Lubricant
Hydraulic Power Steering System (if equipped)	GM Power Steering Fluid (GM Part No. U.S. 89021184, in Canada 89021186).
Automatic Transaxle	DEXRON®-VI Automatic Transmission Fluid.
Manual Transaxle	Manual Transmission Fluid (Part No. 21018899).
Key Lock Cylinders	Multi-Purpose Lubricant, Superlube (GM Part No. U.S. 12346241, in Canada 10953474).
Hood Latch Assembly, Secondary Latch, Pivots, Spring Anchor, and Release Pawl	Lubriplate Lubricant Aerosol (GM Part No. U.S. 12346293, in Canada 992723) or lubricant meeting requirements of NLGI #2, Category LB or GC-LB.
Hood and Door Hinges	Multi-Purpose Lubricant, Superlube (GM Part No. U.S. 12346241, in Canada 109435474).
Weatherstrip Conditioning	Dielectric Silicone Grease (GM Part No. U.S. 12345579, in Canada 992887).

Downloaded from www.Manualslib.com manuals search engine

Normal Maintenance Replacement Parts

Replacement parts identified below by name, part number, or specification can be obtained from your GM dealer.

Part	GM Part Numbers	ACDelco® Part Numbers
Engine Air Cleaner/Filter	10366901	A1615C
Engine Oil Filter		
2.4L Engine	12579143	PF456G
3.5L Engine	25010792	PF47
3.9L Engine	89017342	PF61
Spark Plugs		
2.4L Engine	12569190	41-981
3.5L Engine	12568387	41-101
3.9L Engine	12591131	41–100
Windshield Wiper Blades		
Driver's Side — 24.0 inches (60.0 cm)	15213474	—
Passenger's Side — 21.2 inches (53.0 cm)	15213473	—

Downloaded from www.Manualslib.com manuals search engine

Maintenance Record

After the scheduled services are performed, record the date, odometer reading, who performed the service and the type of services performed in the boxes provided. See *Maintenance Requirements on page 6-2*. Any additional information from *Owner Checks and Services on page 6-8* can be added on the following record pages.
You should retain all maintenance receipts.

Maintenance Record

Date	Odometer Reading	Serviced By	Maintenance I or Maintenance II	Services Performed

Downloaded from www.Manualslib.com manuals search engine

Maintenance Record (cont'd)

Date	Odometer Reading	Serviced By	Maintenance I or Maintenance II	Services Performed

Downloaded from www.Manualslib.com manuals search engine

Maintenance Record (cont'd)

Date	Odometer Reading	Serviced By	Maintenance I or Maintenance II	Services Performed

Downloaded from www.Manualslib.com manuals search engine

Section 7 Customer Assistance and Information

Customer Assistance and Information 7-2
Customer Satisfaction Procedure 7-2
Online Owner Center 7-3
Customer Assistance for Text Telephone (TTY) Users 7-4
Customer Assistance Offices 7-4
GM Mobility Reimbursement Program 7-5
Roadside Assistance Program 7-6
Courtesy Transportation 7-7
Vehicle Data Collection and Event Data Recorders 7-9
Reporting Safety Defects 7-10
Reporting Safety Defects to the United States Government 7-10
Reporting Safety Defects to the Canadian Government 7-11
Reporting Safety Defects to General Motors 7-11
Service Publications Ordering Information 7-11

Downloaded from www.Manualslib.com manuals search engine

Customer Assistance and Information

Customer Satisfaction Procedure

Your satisfaction and goodwill are important to your dealer and to Pontiac. Normally, any concerns with the sales transaction or the operation of your vehicle will be resolved by your dealer's sales or service departments. Sometimes, however, despite the best intentions of all concerned, misunderstandings can occur. If your concern has not been resolved to your satisfaction, the following steps should be taken:

STEP ONE: Discuss your concern with a member of dealership management. Normally, concerns can be quickly resolved at that level. If the matter has already been reviewed with the sales, service or parts manager, contact the owner of the dealership or the general manager.

STEP TWO: If after contacting a member of dealership management, it appears your concern cannot be resolved by the dealership without further help, contact the Pontiac Customer Assistance Center by calling 1-800-762-2737. In Canada, contact GM of Canada Customer Communication Centre in Oshawa by calling 1-800-263-3777 (English) or 1-800-263-7854 (French).

We encourage you to call the toll-free number in order to give your inquiry prompt attention. Please have the following information available to give the Customer Assistance Representative:

- Vehicle Identification Number (VIN). This is available from the vehicle registration or title, or the plate at the top left of the instrument panel and visible through the windshield.
- Dealership name and location.
- Vehicle delivery date and present mileage.

When contacting Pontiac, please remember that your concern will likely be resolved at a dealer's facility. That is why we suggest you follow Step One first if you have a concern.

STEP THREE: Both General Motors and your dealer are committed to making sure you are completely satisfied with your new vehicle. However, if you continue to remain unsatisfied after following the procedure outlined in Steps One and Two, you should file with the BBB Auto Line Program to enforce any additional rights you may have. Canadian owners refer to your Warranty and Owner Assistance Information booklet for information on the Canadian Motor Vehicle Arbitration Plan (CAMVAP).

Downloaded from www.Manualslib.com manuals search engine

The BBB Auto Line Program is an out of court program administered by the Council of Better Business Bureaus to settle automotive disputes regarding vehicle repairs or the interpretation of the New Vehicle Limited Warranty. Although you may be required to resort to this informal dispute resolution program prior to filing a court action, use of the program is free of charge and your case will generally be heard within 40 days. If you do not agree with the decision given in your case, you may reject it and proceed with any other venue for relief available to you.

You may contact the BBB Auto Line Program using the toll-free telephone number or write them at the following address:

BBB Auto Line Program
Council of Better Business Bureaus, Inc.
4200 Wilson Boulevard
Suite 800
Arlington, VA 22203-1838

Telephone: 1-800-955-5100

This program is available in all 50 states and the District of Columbia. Eligibility is limited by vehicle age, mileage and other factors. General Motors reserves the right to change eligibility limitations and/or discontinue its participation in this program.

Online Owner Center

The Owner Center is a resource for your GM ownership needs. Specific vehicle information can be found in one place.

The Online Owner Center allows you to:

- Get e-mail service reminders.
- Access information about your specific vehicle, including tips and videos and an electronic version of this owner's manual (United States only).
- Keep track of your vehicle's service history and maintenance schedule.
- Find GM dealers for service nationwide.
- Receive special promotions and privileges only available to members (United States only).

Refer to the web for updated information.

To register your vehicle, visit www.MyGMLink.com (United States) or My GM Canada within www.gmcanada.com (Canada).

Downloaded from www.Manualslib.com manuals search engine

Customer Assistance for Text Telephone (TTY) Users

To assist customers who are deaf, hard of hearing, or speech-impaired and who use Text Telephones (TTYs), Pontiac has TTY equipment available at its Customer Assistance Center. Any TTY user can communicate with Pontiac by dialing: 1-800-833-PONT (7668). (TTY users in Canada can dial 1-800-263-3830.)

Customer Assistance Offices

Pontiac encourages customers to call the toll-free number for assistance. If a U.S. customer wishes to write to Pontiac, the letter should be addressed to Pontiac's Customer Assistance Center.

United States — Customer Assistance

Pontiac Customer Assistance Center
P.O. Box 33172
Detroit, MI 48232-5172

1-800-762-2737 or
1-800-833-7668 (For Text Telephone devices (TTYs))
Roadside Assistance: 1-800-ROADSIDE (762-3743)
Fax Number: 313-381-0022

From Puerto Rico:
1-800-496-9992 (English)
1-800-496-9993 (Spanish)
Fax Number: 313-381-0022

From U.S. Virgin Islands:
1-800-496-9994
Fax Number: 313-381-0022

Downloaded from www.Manualslib.com manuals search engine

Canada — Customer Assistance

General Motors of Canada Limited
Customer Communication Centre, 163-005
1908 Colonel Sam Drive
Oshawa, Ontario L1H 8P7

1-800-263-3777 (English)
1-800-263-7854 (French)
1-800-263-3830 (For Text Telephone devices (TTYs))
Roadside Assistance: 1-800-268-6800

Overseas — Customer Assistance

Please contact the local General Motors Business Unit.

Mexico, Central America and Caribbean Islands/Countries (Except Puerto Rico and U.S. Virgin Islands) — Customer Assistance

General Motors de Mexico, S. de R.L. de C.V.
Customer Assistance Center
Paseo de la Reforma #2740
Col. Lomas de Bezares
C.P. 11910, Mexico, D.F.
01-800-508-0000
Long Distance: 011-52-53 29 0 800

GM Mobility Reimbursement Program

GM MOBILITY℠

This program, available to qualified applicants, can reimburse you up to $1,000 of the cost of eligible aftermarket adaptive equipment required for your vehicle, such as hand controls or a wheelchair/scooter lift.

The offer is available for a very limited period of time from the date of vehicle purchase/lease. For more details, or to determine your vehicle's eligibility, visit gmmobility.com or call the GM Mobility Assistance Center at 1-800-323-9935. Text telephone (TTY) users, call 1-800-833-9935.

GM of Canada also has a Mobility Program.
Call 1-800-GM-DRIVE (463-7483) for details.
TTY users call 1-800-263-3830.

Downloaded from www.Manualslib.com manuals search engine

Roadside Assistance Program

As the owner of a new Pontiac vehicle, you are automatically enrolled in the Pontiac Roadside Assistance program. This value-added service is intended to provide you with peace of mind as you drive in the city or travel the open road. Contact Pontiac's Roadside Assistance toll-free at 1-800-ROADSIDE (762-3743). Roadside Assistance Representatives are available 24 hours a day, 365 days a year.

We will provide the following services during the Bumper-to-Bumper warranty period, at no expense to you:

- **Fuel Delivery:** Delivery of enough fuel ($5 maximum) for the customer to get to the nearest service station.
- **Lock-out Service (identification required):** Replacement keys or locksmith service will be covered at no charge if you are unable to gain entry into your vehicle. Delivery of the replacement key will be covered within 10 miles (16 km).
- **Emergency Tow:** Tow to the nearest dealership for warranty service or in the event of a vehicle-disabling accident. Assistance provided when the vehicle is mired in sand, mud, or snow.
- **Flat Tire Change:** Installation of a spare tire will be covered at no charge. The customer is responsible for the repair or replacement of the tire if not covered by a warrantable failure.
- **Jump Start:** No-start occurrences which require a battery jump start will be covered at no charge.
- **Dealer Locator Service**

In many instances, mechanical failures are covered under Pontiac's Bumper-to-Bumper warranty. However, when other services are utilized, our Roadside Assistance Representatives will explain any payment obligations you might incur.

For prompt and efficient assistance when calling, please provide the following to the Roadside Assistance Representative:

- Your name, home address, and home telephone number.
- Telephone number of your location.
- Location of the vehicle.
- Model, year, color, and license plate number of the vehicle.
- Mileage, Vehicle Identification Number (VIN), and delivery date of the vehicle.
- Description of the problem.

Downloaded from www.Manualslib.com manuals search engine

While we hope you never have the occasion to use our service, it is added security while traveling for you and your family. Remember, we are only a phone call away. Pontiac Roadside Assistance: 1-800-ROADSIDE (762-3743), text telephone (TTY) users, call 1-888-889-2438.

Pontiac reserves the right to limit services or reimbursement to an owner or driver when, in Pontiac's judgement, the claims become excessive in frequency or type of occurrence.

Roadside Assistance is not part of or included in the coverage provided by the New Vehicle Limited Warranty. Pontiac reserves the right to make any changes or discontinue the Roadside Assistance program at any time without notification.

Canadian Roadside Assistance

Vehicles purchased in Canada have an extensive roadside assistance program accessible from anywhere in Canada or the United States. Please refer to the Warranty and Owner Assistance Information book.

Courtesy Transportation

To enhance your ownership experience, we and our participating dealers are proud to offer Courtesy Transportation, a customer support program for new vehicles.

The Courtesy Transportation program is offered to retail purchase/lease customers in conjunction with the Bumper-to-Bumper coverage provided by the New Vehicle Limited Warranty. Several transportation options are available when warranty repairs are required. This will reduce your inconvenience during warranty repairs.

Scheduling Service Appointments

When your vehicle requires warranty service, you should contact your dealer and request an appointment. By scheduling a service appointment and advising your service consultant of your transportation needs, your dealer can help minimize your inconvenience.

If your vehicle cannot be scheduled into the service department immediately, keep driving it until it can be scheduled for service, unless, of course, the problem is safety-related. If it is, please call your dealership, let them know this, and ask for instructions.

If the dealer requests that you simply drop the vehicle off for service, you are urged to do so as early in the work day as possible to allow for the same day repair.

Downloaded from www.Manualslib.com manuals search engine

Transportation Options

Warranty service can generally be completed while you wait. However, if you are unable to wait, GM helps to minimize your inconvenience by providing several transportation options. Depending on the circumstances, your dealer can offer you one of the following:

Shuttle Service

Participating dealers can provide you with shuttle service to get you to your destination with minimal interruption of your daily schedule. This includes one-way or round trip shuttle service to a destination up to 10 miles (16 km) from the dealership.

Public Transportation or Fuel Reimbursement

If your vehicle requires overnight warranty repairs, reimbursement of public transportation expenses may be available, for up to a maximum of five days. In addition, should you arrange transportation through a friend or relative, reimbursement for reasonable fuel expenses may be available, up to a five-day maximum. Claim amounts should reflect actual costs and be supported by original receipts.

Courtesy Rental Vehicle

Your dealer may arrange to provide you with a courtesy rental vehicle or reimburse you for a rental vehicle that you obtain if your vehicle is kept for a warranty repair. Reimbursement will be limited to a maximum amount per day and must be supported by receipts. This requires that you sign and complete a rental agreement and meet state, local and rental vehicle provider requirements. Requirements vary and may include minimum age requirements, insurance coverage, credit card, etc. You are responsible for fuel usage charges and may also be responsible for taxes, levies, usage fees, excessive mileage or rental usage beyond the completion of the repair.

Generally it is not possible to provide a like-vehicle as a courtesy rental.

Downloaded from www.Manualslib.com manuals search engine

Additional Program Information

Courtesy Transportation is available during the Bumper-to-Bumper warranty coverage period, but it is not part of the New Vehicle Limited Warranty. A separate booklet entitled *Warranty and Owner Assistance Information* furnished with each new vehicle provides detailed warranty coverage information.

Courtesy Transportation is available only at participating dealers and all program options, such as shuttle service, may not be available at every dealer. Please contact your dealer for specific information about availability. All Courtesy Transportation arrangements will be administered by appropriate dealer personnel.

Canadian Vehicles: For warranty repairs during the Complete Vehicle Coverage period of the General Motors of Canada New Vehicle Limited Warranty, alternative transportation may be available under the Courtesy Transportation Program. Please consult your dealer for details.

General Motors reserves the right to unilaterally modify, change or discontinue Courtesy Transportation at any time and to resolve all questions of claim eligibility pursuant to the terms and conditions described herein at its sole discretion.

Vehicle Data Collection and Event Data Recorders

Your vehicle, like other modern motor vehicles, has a number of sophisticated computer systems that monitor and control several aspects of the vehicle's performance. Your vehicle uses on-board vehicle computers to monitor emission control components to optimize fuel economy, to monitor conditions for airbag deployment and, if so equipped, to provide anti-lock braking and to help the driver control the vehicle in difficult driving situations. Some information may be stored during regular operations to facilitate repair of detected malfunctions; other information is stored only in a crash event by computer systems, such as those commonly called event data recorders (EDR).

In a crash event, computer systems, such as the Airbag Sensing and Diagnostic Module (SDM) in your vehicle may record information about the condition of the vehicle and how it was operated, such as data related to engine speed, brake application, throttle position, vehicle speed, safety belt usage, airbag readiness, airbag performance, and the severity of a collision. If your vehicle is equipped with StabiliTrak®, steering performance, including yaw rate, steering wheel angle, and lateral acceleration, is also recorded. This information has been used to improve vehicle crash performance and may be used to improve crash performance of future vehicles and driving safety.

Downloaded from www.Manualslib.com manuals search engine

Unlike the data recorders on many airplanes, these on-board systems do not record sounds, such as conversation of vehicle occupants.

To read this information, special equipment is needed and access to the vehicle or the device that stores the data is required. GM will not access information about a crash event or share it with others other than:

- with the consent of the vehicle owner or, if the vehicle is leased, with the consent of the lessee,
- in response to an official request of police or similar government office,
- as part of GM's defense of litigation through the discovery process, or
- as required by law.

In addition, once GM collects or receives data, GM may:

- use the data for GM research needs,
- make it available for research where appropriate confidentiality is to be maintained and need is shown, or
- share summary data which is not tied to a specific vehicle with non-GM organizations for research purposes.

Others, such as law enforcement, may have access to the special equipment that can read the information if they have access to the vehicle or the device that stores the data.

If your vehicle is equipped with OnStar®, please check the OnStar® subscription service agreement or manual for information on its operations and data collection.

Reporting Safety Defects

Reporting Safety Defects to the United States Government

If you believe that your vehicle has a defect which could cause a crash or could cause injury or death, you should immediately inform the National Highway Traffic Safety Administration (NHTSA), in addition to notifying General Motors.

If NHTSA receives similar complaints, it may open an investigation, and if it finds that a safety defect exists in a group of vehicles, it may order a recall and remedy campaign. However, NHTSA cannot become involved in individual problems between you, your dealer, or General Motors.

Downloaded from www.Manualslib.com manuals search engine

To contact NHTSA, you may either call the Auto Safety Hotline toll-free at 1-800-424-9393 (or 366-0123 in the Washington, D.C. area) or write to:

NHTSA, U.S. Department of Transportation
Washington, D.C. 20590

You can also obtain other information about motor vehicle safety from the hotline.

Reporting Safety Defects to the Canadian Government

If you live in Canada, and you believe that your vehicle has a safety defect, you should immediately notify Transport Canada, in addition to notifying General Motors of Canada Limited. You may call them at 1-800-333-0510 or write to:

Transport Canada
Place de Ville Tower C
330 Sparks Street
Ottawa, Ontario K1A 0N5

Reporting Safety Defects to General Motors

In addition to notifying NHTSA (or Transport Canada) in a situation like this, we certainly hope you'll notify us. Please call us at 1-800-762-2737, or write:

Pontiac Customer Assistance Center
P.O. Box 33172
Detroit, MI 48232-5172

In Canada, please call us at 1-800-263-3777 (English) or 1-800-263-7854 (French). Or, write:

General Motors of Canada Limited
Customer Communication Centre, 163-005
1908 Colonel Sam Drive
Oshawa, Ontario L1H 8P7

Service Publications Ordering Information

Service Manuals

Service Manuals have the diagnosis and repair information on engines, transmission, axle suspension, brakes, electrical, steering, body, etc.

Downloaded from www.Manualslib.com manuals search engine

Transmission, Transaxle, Transfer Case Unit Repair Manual

This manual provides information on unit repair service procedures, adjustments, and specifications for GM transmissions, transaxles, and transfer cases.

Service Bulletins

Service Bulletins give technical service information needed to knowledgeably service General Motors cars and trucks. Each bulletin contains instructions to assist in the diagnosis and service of your vehicle.

In Canada, information pertaining to Product Service Bulletins can be obtained by contacting your General Motors dealer or by calling 1-800-GM-DRIVE (1-800-463-7483).

Owner's Information

Owner publications are written specifically for owners and intended to provide basic operational information about the vehicle. The owner's manual will include the Maintenance Schedule for all models.

In-Portfolio: Includes a Portfolio, Owner's Manual, and Warranty Booklet.

RETAIL SELL PRICE: $35.00

Without Portfolio: Owner's Manual only.

RETAIL SELL PRICE: $25.00

Current and Past Model Order Forms

Service Publications are available for current and past model GM vehicles. To request an order form, please specify year and model name of the vehicle.

ORDER TOLL FREE: 1-800-551-4123 Monday-Friday 8:00 AM - 6:00 PM Eastern Time

For Credit Card Orders Only (VISA-MasterCard-Discover), visit Helm, Inc. on the World Wide Web at: www.helminc.com

Or you can write to:

Helm, Incorporated
P.O. Box 07130
Detroit, MI 48207

Prices are subject to change without notice and without incurring obligation. Allow ample time for delivery.

Note to Canadian Customers: All listed prices are quoted in U.S. funds. Canadian residents are to make checks payable in U.S. funds.

Downloaded from www.Manualslib.com manuals search engine

A

Accessories and Modifications 5-3
Accessory Power Outlet(s) 3-19
Adding Equipment to Your Airbag-Equipped
  Vehicle 1-70
Additives, Fuel 5-6
Add-On Electrical Equipment 5-97
Adjustable Throttle and Brake Pedal 2-26
Air Cleaner/Filter, Engine 5-22
Air Conditioning 3-20, 3-23
Airbag
  Passenger Status Indicator 3-34
  Readiness Light 3-33
Airbag Sensing and Diagnostic Module (SDM) 7-9
Airbag System 1-56
  Adding Equipment to Your Airbag-Equipped
    Vehicle 1-70
  How Does an Airbag Restrain? 1-63
  Passenger Sensing System 1-65
  Servicing Your Airbag-Equipped Vehicle 1-70
  What Makes an Airbag Inflate? 1-63
  What Will You See After an Airbag Inflates? 1-64
  When Should an Airbag Inflate? 1-61
  Where Are the Airbags? 1-58
Antenna, Backglass 3-89
Antenna, Fixed Mast 3-88
Antenna, XM™ Satellite Radio Antenna
  System 3-89
Anti-Lock Brake System (ABS) 4-7
Anti-Lock Brake, System Warning Light 3-37
Appearance Care 5-87
  Aluminum Wheels 5-93
  Care of Safety Belts 5-91
  Chemical Paint Spotting 5-94
  Cleaning Exterior Lamps/Lenses 5-91
  Cleaning the Inside of Your Vehicle 5-88
  Fabric/Carpet 5-89
  Finish Care 5-92
  Finish Damage 5-94
  Instrument Panel, Vinyl, and Other Plastic
    Surfaces 5-90
  Leather 5-90
  Sheet Metal Damage 5-94
  Tires 5-93
  Underbody Maintenance 5-94
  Vehicle Care/Appearance Materials 5-95
  Washing Your Vehicle 5-91
  Weatherstrips 5-91
  Windshield and Wiper Blades 5-92

Downloaded from www.Manualslib.com manuals search engine

Audio System(s) 3-54
Audio Steering Wheel Controls 3-86, 3-87
Backglass Antenna 3-89
Care of Your CD and DVD Player 3-88
Care of Your CDs and DVDs 3-88
Fixed Mast Antenna 3-88
Radio with CD 3-56, 3-61
Radio with Six-Disc CD 3-71
Setting the Time for Radios with Radio Data Systems (RDS) 3-55
Setting the Time for Radios without Radio Data Systems (RDS) 3-55
Theft-Deterrent Feature 3-86
Understanding Radio Reception 3-87
XM™ Satellite Radio Antenna System 3-89
Automatic Climate Control System 3-23
Automatic Door Lock 2-12
Automatic Headlamp System 3-16
Automatic Transaxle
Fluid 5-23, 5-24
Operation 2-28

B

Backglass Antenna 3-89
Battery 5-42
Run-Down Protection 3-18
Before Leaving on a Long Trip 4-24
Bench Seat, Split (60/40) 1-9
Brake
Anti-Lock Brake System (ABS) 4-7
Emergencies 4-8
Parking 2-33
System Warning Light 3-36
Brake Pedal, Throttle 2-26
Brakes 5-39
Braking 4-6
Braking in Emergencies 4-8
Break-In, New Vehicle 2-22
Bulb Replacement 5-49
Center High-Mounted Stoplamp (CHMSL) 5-51
Halogen Bulbs 5-49
Headlamp Aiming 5-47
Headlamps, Front Turn Signal, Sidemarker, and Parking Lamps 5-50
Replacement Bulbs 5-55
Taillamps, Turn Signal, Sidemarker, Stoplamps, and Back-Up Lamps 5-52, 5-53, 5-54
Buying New Tires 5-68

C

California Fuel 5-6
California Proposition 65 Warning 5-3
Canadian Owners ii

Downloaded from www.Manualslib.com manuals search engine

Capacities and Specifications 5-105
Carbon Monoxide 2-14, 2-37, 4-27, 4-40
Care of
  Safety Belts 5-91
  Your CD and DVD Player 3-88
  Your CDs and DVDs 3-88
Center Console Storage Area 2-45
Center High-Mounted Stoplamp (CHMSL) 5-51
Chains, Tire 5-73
Charging System Light 3-36
Check
  Engine Light 3-40
Checking Things Under the Hood 5-10
Chemical Paint Spotting 5-94
Child Restraints
  Child Restraint Systems 1-36
  Infants and Young Children 1-33
  Lower Anchors and Tethers for Children 1-41
  Older Children 1-30
  Securing a Child Restraint in a Rear Seat Position 1-49
  Securing a Child Restraint in the Right Front Seat Position 1-52
  Where to Put the Restraint 1-39
Cleaning
  Aluminum Wheels 5-93
  Exterior Lamps/Lenses 5-91
  Fabric/Carpet 5-89
Cleaning (cont.)
  Finish Care 5-92
  Inside of Your Vehicle 5-88
  Instrument Panel, Vinyl, and Other Plastic Surfaces 5-90
  Leather 5-90
  Tires 5-93
  Underbody Maintenance 5-94
  Washing Your Vehicle 5-91
  Weatherstrips 5-91
  Windshield and Wiper Blades 5-92
Climate Control System 3-20
  Automatic 3-23
  Outlet Adjustment 3-28
Clutch, Hydraulic 5-26
Comfort Guides, Rear Safety Belt 1-27
Compact Spare Tire 5-86
Content Theft-Deterrent 2-19
Control of a Vehicle 4-5
Convenience Net 2-46
Coolant
  Engine Temperature Gage 3-40
  Heater, Engine 2-27
  Surge Tank Pressure Cap 5-30
Cooling System 5-32
Courtesy Lamps 3-17
Cruise Control 3-10
Cruise Control Light 3-44

Downloaded from www.Manualslib.com manuals search engine

Cupholder(s) 2-45
Customer Assistance Information
Courtesy Transportation 7-7
Customer Assistance for Text Telephone (TTY) Users 7-4
Customer Assistance Offices 7-4
Customer Satisfaction Procedure 7-2
GM Mobility Reimbursement Program 7-5
Reporting Safety Defects to General Motors 7-11
Reporting Safety Defects to the Canadian Government 7-11
Reporting Safety Defects to the United States Government 7-10
Roadside Assistance Program 7-6
Service Publications Ordering Information 7-11

D

Daytime Running Lamps 3-15
Defensive Driving 4-2
Delayed Headlamps 3-15
Delayed Locking 2-12
Doing Your Own Service Work 5-4
Dome Lamp 3-18
Door
Automatic Door Lock 2-12
Delayed Locking 2-12
Door Ajar Reminder 2-11
Locks 2-10
Power Door Locks 2-11
Programmable Automatic Door Unlock 2-13
Driver
Position, Safety Belt 1-15
Driver Information Center (DIC) 3-45
DIC Operation and Displays 3-46
DIC Vehicle Personalization 3-52
DIC Warnings and Messages 3-48
Driving
At Night 4-18
City 4-22
Defensive 4-2
Drunken 4-3
Freeway 4-23
Hill and Mountain Roads 4-26
In Rain and on Wet Roads 4-20
Rocking Your Vehicle to Get it Out 4-32
Winter 4-27

Downloaded from www.Manualslib.com manuals search engine

E

Easy Entry Seat 1-6
Electrical System
  Add-On Equipment 5-97
  Engine Compartment Fuse Block 5-100
  Fuses 5-97
  Instrument Panel Fuse Block 5-98
  Power Windows and Other Power Options 5-97
  Rear Compartment Fuse Block 5-102
  Windshield Wiper Fuses 5-97
Engine
  Air Cleaner/Filter 5-22
  Battery 5-42
  Check and Service Engine Soon Light 3-40
  Coolant 5-27
  Coolant Heater 2-27
  Coolant Temperature Gage 3-40
  Engine Compartment Overview 5-12
  Exhaust 2-37
  Oil 5-17
  Oil Life System 5-20
  Overheated Protection Operating Mode 5-32
  Overheating 5-30
  Starting 2-24
Enhanced Traction System (ETS) 4-11
  Active Light 3-39
  Warning Light 3-38
Entry/Exit Lighting 3-18
Event Data Recorders (EDR) 7-9
Extender, Safety Belt 1-29

F

Filter
  Engine Air Cleaner 5-22
Finish Damage 5-94
Fixed Mast Antenna 3-88
Flash-to-Pass 3-8
Flat Tire 5-74
Flat Tire, Changing 5-74
Flat Tire, Storing 5-83
Fluid
  Automatic Transaxle 5-23, 5-24
  Manual Transaxle 5-26
  Power Steering 5-37
  Windshield Washer 5-38
Fog Lamps 3-17

Downloaded from www.Manualslib.com manuals search engine

Fuel 5-5
Additives 5-6
California Fuel 5-6
Filling a Portable Fuel Container 5-10
Filling Your Tank 5-8
Fuels in Foreign Countries 5-7
Gage 3-45
Gasoline Octane 5-5
Gasoline Specifications 5-5
Low Warning Light 3-45
Fuses 5-97
Engine Compartment Fuse Block 5-100
Instrument Panel Fuse Block 5-98
Rear Compartment Fuse Block 5-102
Windshield Wiper 5-97

G

Gage
Engine Coolant Temperature 3-40
Fuel 3-45
Speedometer 3-31
Tachometer 3-31
Gasoline
Octane 5-5
Specifications 5-5
Glove Box 2-45
GM Mobility Reimbursement Program 7-5

H

Hazard Warning Flashers 3-6
Head Restraints 1-6
Headlamp
Aiming 5-47
Headlamps 3-14
Automatic Headlamp System 3-16
Bulb Replacement 5-49
Daytime Running Lamps 3-15
Delayed 3-15
Flash-to-Pass 3-8
Halogen Bulbs 5-49
Headlamps, Front Turn Signal, Sidemarker, and Parking Lamps 5-50
High/Low Beam Changer 3-8
On Reminder 3-14
Headlamps Off in Park (P) 3-14
Heated Seats 1-4
Heater 3-20, 3-23
Highbeam On Light 3-44
Highway Hypnosis 4-25
Hill and Mountain Roads 4-26
Hood
Checking Things Under 5-10
Release 5-11

Downloaded from www.Manualslib.com manuals search engine

Horn 3-6
How to Use This Manual ii
How to Wear Safety Belts Properly 1-15
Hydraulic Clutch 5-26

I

Ignition Positions 2-23
Infants and Young Children, Restraints 1-33
Inflation -- Tire Pressure 5-64
Instrument Panel
  Overview 3-4
Instrument Panel (I/P)
  Brightness 3-17
  Cluster 3-29

J

Jump Starting 5-42

K

Keyless Entry System 2-4
Keys 2-3

L

Labelling, Tire Sidewall 5-59
Lamps
  Battery Run-Down Protection 3-18
  Courtesy 3-17
  Dome 3-18
  Fog 3-17
  Overhead Console Reading 3-18
  Trunk 3-18
LATCH System
  Child Restraints 1-41
Lift Seat, Power 1-8
Light
  Airbag Readiness 3-33
  Anti-Lock Brake System Warning 3-37
  Brake System Warning 3-36
  Charging System 3-36
  Cruise Control 3-44
  Enhanced Traction System (ETS)
    Active Light 3-39
  Enhanced Traction System (ETS)
    Warning Light 3-38
  Highbeam On 3-44
  Low Fuel Warning 3-45
  Malfunction Indicator 3-40
  Oil Pressure 3-43
  Passenger Airbag Status Indicator 3-34
  Passenger Safety Belt Reminder 3-32

Downloaded from www.Manualslib.com manuals search engine

Light (cont.)
Safety Belt Reminder 3-32
Security 3-44
Service Vehicle Soon 3-44
StabiliTrak® Indicator 3-39
StabiliTrak® Not Ready 3-39
TCS Warning Light 3-38
Traction Control System Active 3-38
Traction Control System (TCS) Warning 3-38
Lighting
Entry/Exit 3-18
Loading Your Vehicle 4-33
Lockout Protection 2-13
Locks
Automatic Door Lock 2-12
Delayed Locking 2-12
Door 2-10
Lockout Protection 2-13
Power Door 2-11
Programmable Automatic Door Unlock 2-13
Loss of Control 4-17
Low Fuel Warning Light 3-45
Lowering the Retractable Hardtop 2-49
Lumbar
Manual Controls 1-3

M

Maintenance Schedule
Additional Required Services 6-6
At Each Fuel Fill 6-8
At Least Once a Month 6-9
At Least Once a Year 6-9
Introduction 6-2
Maintenance Footnotes 6-7
Maintenance Record 6-14
Maintenance Requirements 6-2
Normal Maintenance Replacement Parts 6-13
Owner Checks and Services 6-8
Recommended Fluids and Lubricants 6-12
Scheduled Maintenance 6-4
Using 6-3
Your Vehicle and the Environment 6-2
Malfunction Indicator Light 3-40
Manual Lumbar Controls 1-3
Manual Seats 1-2
Manual Transaxle
Fluid 5-26
Operation 2-32
Message
DIC Warnings and Messages 3-48

Downloaded from www.Manualslib.com manuals search engine

Mirrors
Automatic Dimming Rearview with Compass 2-41
Automatic Dimming Rearview with OnStar® and Compass 2-39
Manual Rearview Mirror 2-39
Manual Rearview Mirror with OnStar® 2-39
Outside Convex Mirror 2-43
Outside Power Mirrors 2-43
MyGMLink.com 7-3

N

New Vehicle Break-In 2-22
Normal Maintenance Replacement Parts 6-13

O

Odometer 3-31
Odometer, Trip 3-31
Off-Road Recovery 4-15
Oil
Engine 5-17
Pressure Light 3-43
Oil, Engine Oil Life System 5-20
Older Children, Restraints 1-30
Online Owner Center 7-3
OnStar® System, see OnStar® Manual 2-44
Other Warning Devices 3-6
Outlet Adjustment 3-28
Outside
Convex Mirror 2-43
Power Mirrors 2-43
Overhead Console Reading Lamps 3-18
Overheated Engine Protection
Operating Mode 5-32
Owner Checks and Services 6-8
Owners, Canadian ii

P

Park (P)
Shifting Into 2-34
Shifting Out of 2-36
Park (P) Headlamps Off in Park (P) 3-14
Parking
Brake 2-33
Over Things That Burn 2-37
Parking Your Vehicle 2-36
Passenger Airbag Status Indicator 3-34
Passenger Sensing System 1-65
Passing 4-16
PASS-Key® III+ 2-20
PASS-Key® III+ Operation 2-21

Downloaded from www.Manualslib.com manuals search engine

Power
Accessory Outlet(s) 3-19
Door Locks 2-11
Electrical System 5-97
Lift Seat 1-8
Retained Accessory (RAP) 2-24
Seat 1-3
Steering Fluid 5-37
Windows 2-17
Pretensioners, Safety Belt 1-29
Programmable Automatic Door Unlock 2-13

Q

Questions and Answers About Safety Belts 1-14

R

Radios 3-54
Care of Your CD and DVD Player 3-88
Care of Your CDs and DVDs 3-88
Radio with CD 3-56, 3-61
Radio with Six-Disc CD 3-71
Setting the Time for Radios with Radio Data Systems (RDS) 3-55
Setting the Time for Radios without Radio Data Systems (RDS) 3-55
Theft-Deterrent 3-86
Radios (cont.)
Understanding Reception 3-87
Raising the Retractable Hardtop 2-51
Rear Safety Belt Comfort Guides 1-27
Rear Seat Passengers, Safety Belts 1-23
Rearview Mirror, Automatic Dimming with Compass 2-41
Rearview Mirror, Automatic Dimming with OnStar® and Compass 2-39
Rearview Mirror with OnStar® 2-39
Rearview Mirrors 2-39
Reclining Seatbacks 1-4
Recommended Fluids and Lubricants 6-12
Recreational Vehicle Towing 4-38
Remote Keyless Entry System 2-4
Remote Keyless Entry System, Operation 2-5
Removing the Flat Tire and Installing the Spare Tire 5-78
Removing the Spare Tire and Tools 5-76
Replacement Bulbs 5-55
Reporting Safety Defects
Canadian Government 7-11
General Motors 7-11
United States Government 7-10
Restraint System Check
Checking the Restraint Systems 1-71
Replacing Restraint System Parts After a Crash 1-72
Retained Accessory Power (RAP) 2-24

Downloaded from www.Manualslib.com manuals search engine

Retractable Hardtop 2-49
Lowering 2-49
Raising 2-51
Right Front Passenger Position, Safety Belts 1-23
Roadside
Assistance Program 7-6
Rocking Your Vehicle to Get it Out 4-32
Running the Engine While Parked 2-38

S

Safety Belt
Passenger Reminder Light 3-32
Pretensioners 1-29
Reminder Light 3-32
Safety Belts
Care of 5-91
Driver Position 1-15
How to Wear Safety Belts Properly 1-15
Questions and Answers About Safety Belts 1-14
Rear Safety Belt Comfort Guides 1-27
Rear Seat Passengers 1-23
Right Front Passenger Position 1-23
Safety Belt Extender 1-29
Safety Belt Use During Pregnancy 1-23
Safety Belts Are for Everyone 1-10
Shoulder Belt Height Adjuster 1-22
Safety Warnings and Symbols iii
Scheduled Maintenance 6-4
Seats
60/40 Split Bench Seat 1-9
Easy Entry Seat 1-6
Head Restraints 1-6
Heated Seats 1-4
Manual 1-2
Manual Lumbar 1-3
Power Lift Seat 1-8
Power Seat 1-3
Reclining Seatbacks 1-4
Securing a Child Restraint
Rear Seat Position 1-49
Right Front Seat Position 1-52
Security Light 3-44
Service 5-3
Accessories and Modifications 5-3
Adding Equipment to the Outside of
Your Vehicle 5-5
California Proposition 65 Warning 5-3
Doing Your Own Work 5-4
Engine Soon Light 3-40
Publications Ordering Information 7-11
Vehicle Soon Light 3-44
Servicing Your Airbag-Equipped Vehicle 1-70
Setting the Time
Radios with Radio Data Systems (RDS) 3-55
Radios without Radio Data Systems (RDS) 3-55
Sheet Metal Damage 5-94
Shifting Into Park (P) 2-34

Downloaded from www.Manualslib.com manuals search engine

Shifting Out of Park (P) 2-36
Shoulder Belt Height Adjuster 1-22
Signals, Turn and Lane-Change 3-8
Spare Tire
  Compact 5-86
  Installing 5-78
  Removing 5-76
  Storing 5-83
Specifications, Capacities 5-105
Speedometer 3-31
Split Bench Seat (60/40) 1-9
StabiliTrak® System 4-12
StabiliTrak® Indicator Light 3-39
StabiliTrak® Not Ready Light 3-39
Starting Your Engine 2-24
Steering 4-13
Steering Wheel Controls, Audio 3-86, 3-87
Steering Wheel, Tilt Wheel 3-6
Storage Areas
  Center Console Storage Area 2-45
  Convenience Net 2-46
  Cupholder(s) 2-45
  Glove Box 2-45
Stuck in Sand, Mud, Ice or Snow 4-32
Sun Visors 2-19
Sunroof 2-46
Sunroof - Panoramic 2-47

T

Tachometer 3-31
Taillamps
  Turn Signal, Sidemarker, Stoplamps, and
    Back-Up Lamps 5-52, 5-53, 5-54
TCS Active Light 3-38
TCS Warning Light 3-38
Theft-Deterrent, Radio 3-86
Theft-Deterrent Systems 2-19
  Content Theft-Deterrent 2-19
  PASS-Key® III+ 2-20
  PASS-Key® III+ Operation 2-21
Throttle, Adjustable 2-26
Tilt Wheel 3-6
Tires 5-57
  Aluminum Wheels, Cleaning 5-93
  Buying New Tires 5-68
  Chains 5-73
  Changing a Flat Tire 5-74
  Cleaning 5-93
  Compact Spare Tire 5-86
  Different Size 5-69
  If a Tire Goes Flat 5-74
  Inflation -- Tire Pressure 5-64
  Inspection and Rotation 5-66
  Installing the Spare Tire 5-78

Downloaded from www.Manualslib.com manuals search engine

Tires (cont.)
Removing the Flat Tire 5-78
Removing the Spare Tire and Tools 5-76
Storing a Flat or Spare Tire and Tools 5-83
Tire Sidewall Labelling 5-59
Tire Terminology and Definitions 5-62
Uniform Tire Quality Grading 5-70
Wheel Alignment and Tire Balance 5-71
Wheel Replacement 5-72
When It Is Time for New Tires 5-67
Towing
Recreational Vehicle 4-38
Towing a Trailer 4-40
Your Vehicle 4-38
Traction
Control System Active Light 3-38
Control System (TCS) 4-9
Control System Warning Light 3-38
Enhanced Traction System (ETS) 4-11
Enhanced Traction System (ETS)
Active Light 3-39
Enhanced Traction System (ETS)
Warning Light 3-38
StabiliTrak® System 4-12
Transaxle
Fluid, Automatic 5-23, 5-24
Fluid, Manual 5-26
Transaxle Operation, Automatic 2-28
Transaxle Operation, Manual 2-32
Trip Odometer 3-31
Trunk 2-14
Trunk Lamps 3-18
Turn and Lane-Change Signals 3-8
Turn Signal/Multifunction Lever 3-7

U

Understanding Radio Reception 3-87
Uniform Tire Quality Grading 5-70

V

Vehicle
Control 4-5
Damage Warnings iv
Loading 4-33
Parking Your 2-36
Service Soon Light 3-44
Symbols iv
Vehicle Data Collection and Event Data
Recorders 7-9
Vehicle Identification
Number (VIN) 5-96
Service Parts Identification Label 5-96
Vehicle Personalization
DIC 3-52
Ventilation Adjustment 3-28
Visors 2-19

Downloaded from www.Manualslib.com manuals search engine

W

Warning Lights, Gages and Indicators 3-29
Warnings
DIC Warnings and Messages 3-48
Hazard Warning Flashers 3-6
Other Warning Devices 3-6
Safety and Symbols iii
Vehicle Damage iv
Wheels
Alignment and Tire Balance 5-71
Different Size 5-69
Replacement 5-72
Where to Put the Restraint 1-39
Windows 2-16
Power 2-17
Windshield
Wiper Blades, Cleaning 5-92
Windshield Washer 3-10
Fluid 5-38
Windshield Wiper
Blade Replacement 5-56
Fuses 5-97
Windshield Wipers 3-9
Winter Driving 4-27

X

XM™ Satellite Radio Antenna System 3-89

Y

Your Vehicle and the Environment 6-2

Downloaded from www.Manualslib.com manuals search engine