ENGINE

INSPECTION

1. INSPECT ENGINE COOLANT

(a) Inspect the engine coolant (See page CO-1).

2. INSPECT ENGINE OIL

(a) Inspect the engine oil (See page LU-1).

3. INSPECT BATTERY

(a) Inspect the battery (See page CH-4).

4. INSPECT SPARK PLUGS

(a) Inspect the spark plugs (See page IG-5).

5. INSPECT AIR CLEANER FILTER ELEMENT SUB-ASSEMBLY

(a) Remove the air cleaner filter element sub-assembly.

(b) Visually check that there is no dirt, blockage, and/or damage to the air cleaner filter element.

HINT:

- If there is any dirt or a blockage in the air cleaner filter element, clean it with compressed air.
- If any dirt or a blockage remains even after cleaning the air cleaner filter element with compressed air, replace it.

EM

6. INSPECT IGNITION TIMING

(a) Warm up the engine.

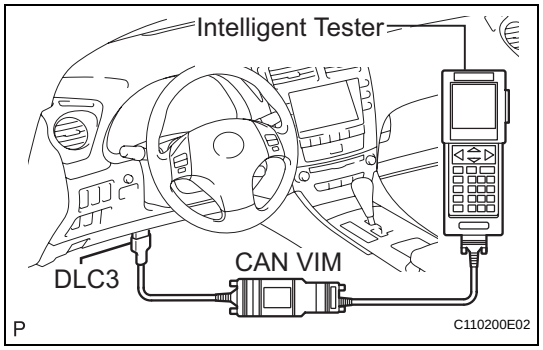

(b) When using the intelligent tester:

Check the ignition timing.

(1) Connect the intelligent tester to the DLC3.

(2) Enter DATA LIST MODE on the intelligent tester.

Ignition timing:

8 to 12° BTDC at idle

HINT:

Refer to the intelligent tester operator's manual for help when selecting the DATA LIST.

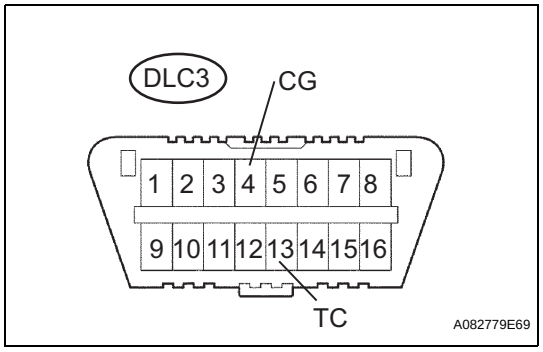

(c) When not using the intelligent tester:

Check the ignition timing.

(1) Using SST, connect terminals 13 (TC) and 4 (CG) of the DLC3.

SST 09843-18040

NOTICE:

- **Confirm the terminal numbers before connecting them. Connection with a wrong terminal can damage the engine.**
- **Turn off all electrical systems before connecting the terminals.**
- **Perform this inspection after the cooling fan motor is turned off.**

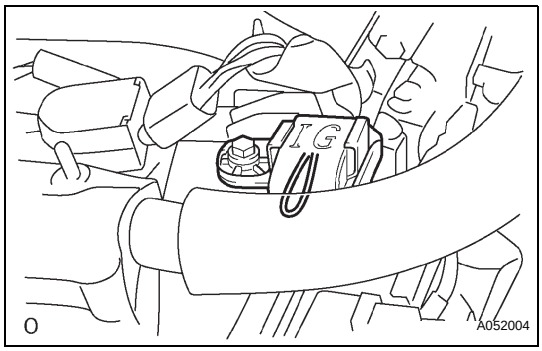

(2) Remove the No. 1 engine cover.

(3) Pull out the wire harness as shown in the illustration. Connect the clip of the timing light to the wire harness.

NOTICE:

- **Use a timing light which can detect the first signal.**
- **After checking, be sure to tape the wire harness.**

(4) Check the ignition timing at idle.

Ignition timing:

8 to 12° BTDC at idle

NOTICE:

When checking the ignition timing, the transmission should be in neutral.

HINT:

After engine rpm is kept at 1,000 to 1,300 rpm for 5 seconds, check that it returns to idle speed.

(5) Disconnect terminals 13 (TC) and 4 (CG) of the DLC3.

(6) Check the ignition timing at idle.

Ignition timing:

5 to 15° BTDC at idle

(7) Confirm that the ignition timing moves to the advanced angle side when the engine rpm is increased.

(8) Remove the timing light.

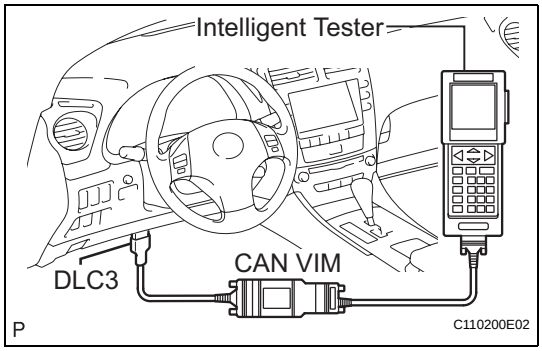

7. INSPECT ENGINE IDLE SPEED

(a) Warm up the engine.

(b) When using the intelligent tester:

Check the idle speed.

(1) Connect the intelligent tester to the DLC3.

HINT:

Refer to the intelligent tester operator's manual for further details.

(2) Enter DATA LIST MODE on the intelligent tester.

Idle speed

Item	Specified Condition
M/T	650 to 750 rpm
A/T	610 to 710 rpm

NOTICE:

- **When checking the idle speed, the transmission should be in neutral.**
- **Check the idle speed with the cooling fan off.**
- **Switch off all accessories and air conditioning before connecting the intelligent tester.**

EM

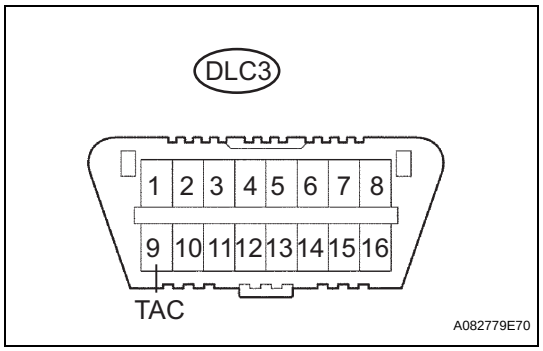

(c) When not using the intelligent tester:
Check the idle speed.
(1) Using SST, connect the tachometer tester probe to terminal 9 (TAC) of the DLC3.
SST 09843-18030
(2) Check the idle speed.
Idle speed

Item	Specified Condition
M/T	650 to 750 rpm
A/T	610 to 710 rpm

8. INSPECT COMPRESSION
(a) Warm up and stop the engine.
(b) Disconnect the injector connectors.
(c) Remove the ignition coils.
(d) Remove the spark plugs.

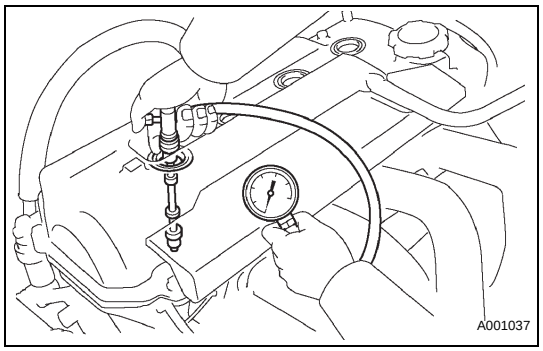

(e) Check the cylinder compression pressure.
(1) Insert a compression gauge into the spark plug hole.
(2) Fully open the throttle.
(3) While cranking the engine, measure the compression pressure.
Compression pressure:
1.360 MPa (13.9 kgf/ cm^2, 198 psi)
Minimum pressure:
0.98 MPa (10 kgf/ cm^2, 142 psi)
Difference between each cylinder:
100 kPa (1.0 kgf/ cm^2, 14 psi)
NOTICE:
- **Always use a fully charged battery to obtain an engine speed of 250 rpm or more.**
- **Check the other cylinders' compression pressure in the same way.**
- **This measurement must be done as quickly as possible.**

(4) If the cylinder compression is low, pour a small amount of engine oil into the cylinder through the spark plug hole and inspect again.
HINT:
- If adding oil increases the compression, the piston rings and/or cylinder bore may be worn or damaged.
- If pressure stays low, a valve may be stuck or seated improperly, or there may be leakage in the gasket.

9. INSPECT CO/HC
(a) Start the engine.
(b) Run the engine at 2,500 rpm for approximately 180 seconds.
(c) Insert the CO/HC meter testing probe at least 40 cm (1.3 ft) into the tailpipe during idling.

EM

(d) Immediately check CO/HC concentration at idle and/or 2,500 rpm.
HINT:
- Complete the measuring within 3 minutes.
- Check regulations and restrictions in your area when performing 2 mode CO/HC concentration testing (engine check at both idle speed and at 2,500 rpm).

(e) If the CO/HC concentration does not comply with regulations, troubleshoot in the order given below.
(1) Check A/F sensor and heated oxygen sensor operation (See page EC-21).
(2) See the table below for possible causes, and then inspect and repair.

CO	HC	Problems	Causes
Normal	High	Rough idle	1. Faulty ignitions: – Incorrect timing – Fouled, shorted or improperly gapped plugs 2. Incorrect valve clearance 3. Leaky intake and exhaust valves 4. Leaky cylinders
Low	High	Rough idle (fluctuating HC reading)	1. Vacuum leaks: – PCV hoses – Intake manifold – Throttle body – Brake booster line 2. Lean mixture causing misfire
High	High	Rough idle (black smoke from exhaust)	1. Restricted air filter 2. Plugged PCV valve 3. Faulty SFI system: – Faulty pressure regulator – Defective ECT – Defective MAF meter – Faulty ECM – Faulty injectors – Faulty throttle position sensor

DRIVE BELT

COMPONENTS

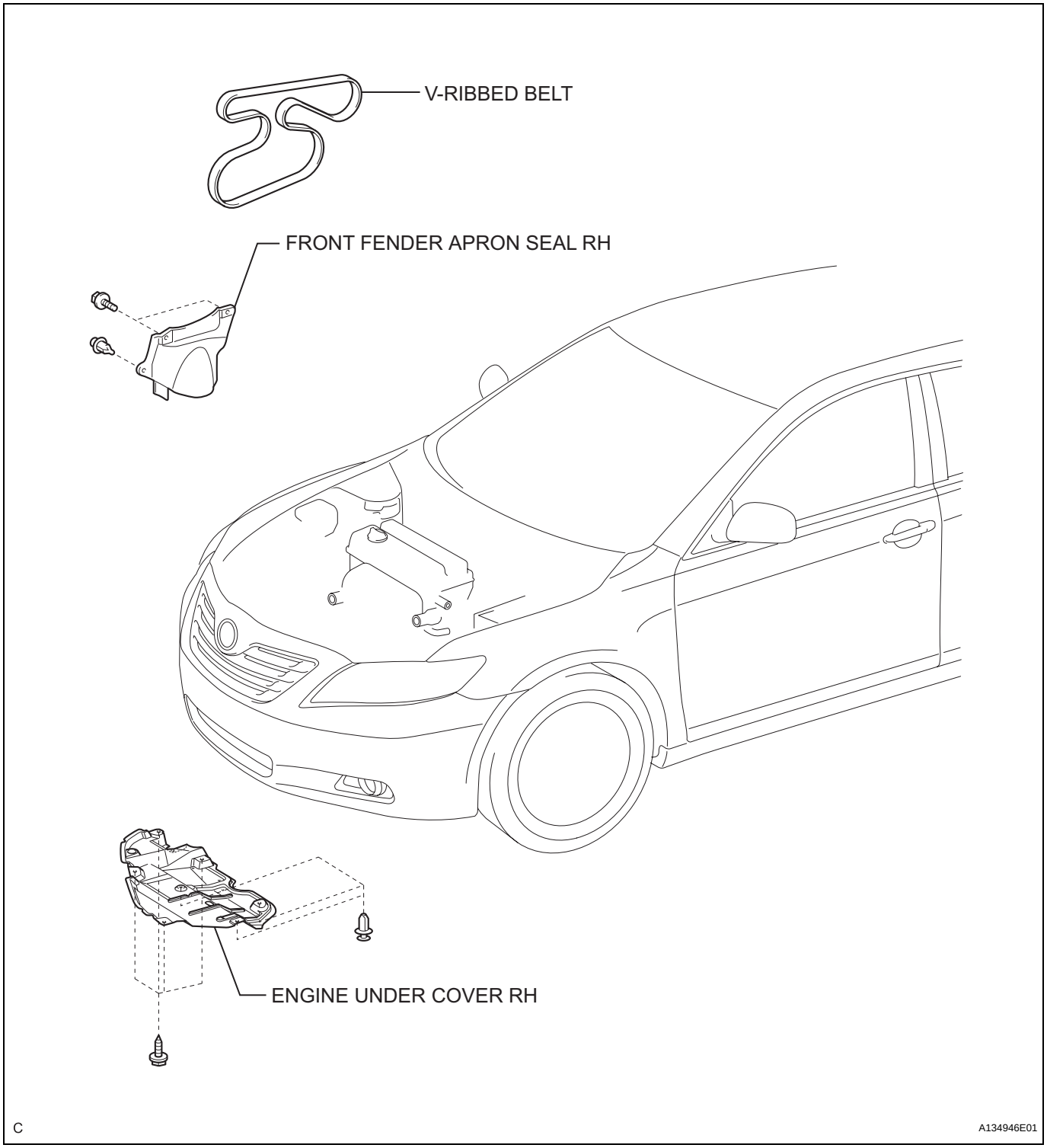

REMOVAL

1. REMOVE FRONT WHEEL RH

2. REMOVE ENGINE UNDER COVER RH

3. REMOVE FRONT FENDER APRON SEAL RH

4. REMOVE V-RIBBED BELT

(a) Using SST and 19 mm socket wrench, loosen the V-ribbed belt tensioner arm clockwise, then remove the V-ribbed belt.

SST 09216-42010

NOTICE:

- **Be sure to connect SST and the tools so that they are in line during use.**
- **When retracting the tensioner, turn it clockwise slowly for 3 seconds or more. Do not apply force rapidly.**
- **After the tensioner is fully retracted, do not apply force any more than necessary.**

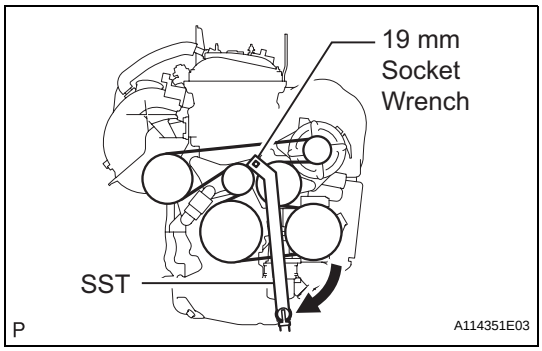

EM

INSPECTION

1. INSPECT V-RIBBED BELT

(a) Visually check the V-ribbed belt for excessive wear, frayed cords, etc. If any defect has been found, replace the V-ribbed belt.

HINT:

- Cracks on the rib side of a belt are considered acceptable. If the belt has chunks missing from the ribs, it should be replaced.
- A "new belt" is a belt which has been used for less than 5 minutes with the engine running.
- A "used belt" is a belt which has been used for 5 minutes or more with the engine running.

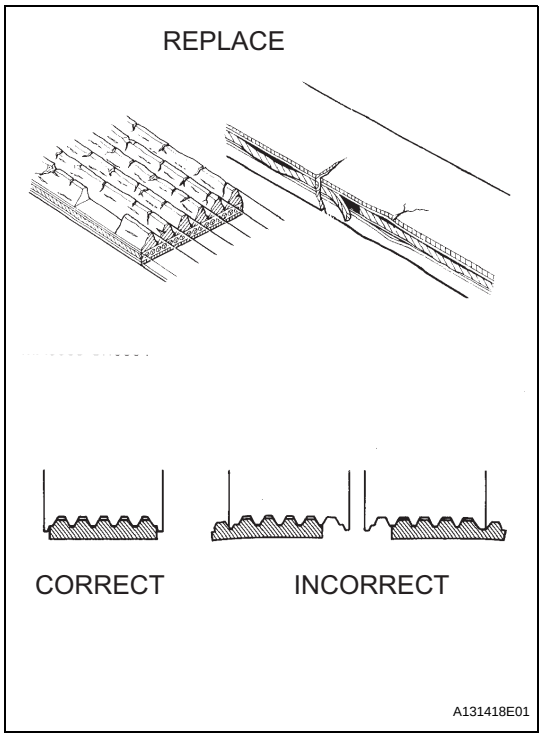

INSTALLATION

1. INSTALL V-RIBBED BELT

(a) Using SST and 19 mm socket wrench, loosen the V-ribbed belt tensioner arm clockwise, then install the V-ribbed belt.

SST 09216-42010

NOTICE:

- **Be sure to connect SST and the tools so that they are in line during use.**
- **When retracting the tensioner, turn it clockwise slowly for 3 seconds or more. Do not apply force rapidly.**

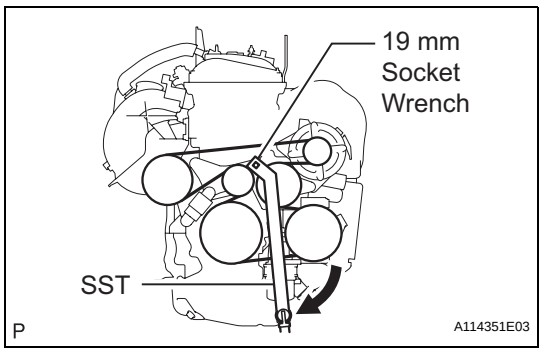

- **After the tensioner is fully retracted, do not apply force any more than necessary.**

(b) After installing the V-ribbed belt, check that it fits properly in the ribbed grooves. Check to confirm that the belt has not slipped out of the grooves on the bottom of the crank pulley by hand.

2. INSTALL FRONT FENDER APRON SEAL RH

3. INSTALL ENGINE UNDER COVER RH

4. INSTALL FRONT WHEEL RH
Torque: 103 N*m (1,050 kgf*cm, 76 ft.*lbf)

VALVE CLEARANCE

ADJUSTMENT

1. **REMOVE FRONT WHEEL RH**
2. **REMOVE ENGINE UNDER COVER LH**
3. **REMOVE ENGINE UNDER COVER RH**
4. **REMOVE FRONT FENDER APRON SUB-ASSEMBLY RH**
5. **REMOVE NO. 1 ENGINE COVER (See page EM-94)**
6. **REMOVE IGNITION COIL ASSEMBLY (See page EM-106)**
7. **REMOVE CYLINDER HEAD COVER SUB-ASSEMBLY (See page EM-21)**

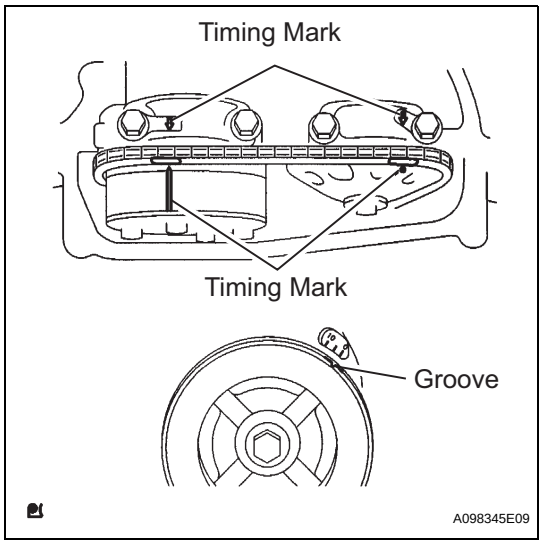

8. **SET NO. 1 CYLINDER TO TDC/COMPRESSION**
   (a) Turn the crankshaft pulley until its groove and the timing mark "0" of the timing chain cover are aligned.
   (b) Check that each timing mark of the camshaft timing gear and sprocket is aligned with each timing mark located on the No. 1 and No. 2 bearing caps as shown in the illustration. If not, turn the crankshaft by 1 revolution (360°) to align the timing marks as above.

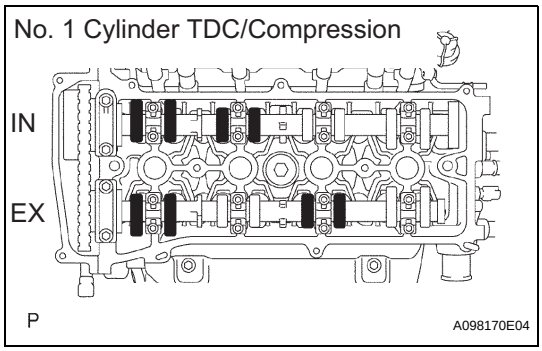

9. **CHECK VALVE CLEARANCE**
   (a) Check only the valves indicated.
      (1) Using a feeler gauge, measure the clearance between the valve lifter and camshaft.
      Standard valve clearance (cold)

Item	Standard Condition
Intake	0.19 to 0.29 mm (0.0075 to 0.0114 in.)
Exhaust	0.38 to 0.48 mm (0.0150 to 0.0189 in.)

      (2) Record any out-of-specification valve clearance measurements. They will be used later to determine the required replacement valve clearance lifters.
   (b) Turn the crankshaft 1 revolution (360°) and set the No. 4 cylinder to the TDC/compression.

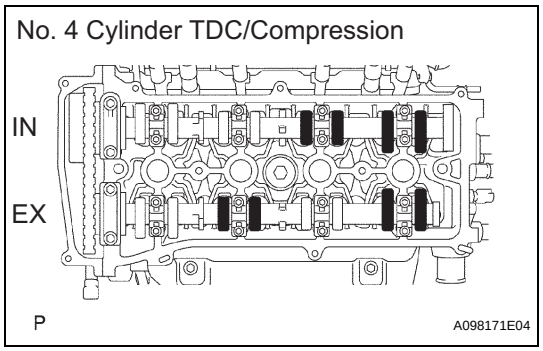

(c) Check only the valves indicated.
(1) Using a feeler gauge, measure the clearance between the valve lifter and camshaft.
Standard valve clearance (cold)

Item	Standard Condition
Intake	**0.19 to 0.29 mm (0.0075 to 0.0114 in.)**
Exhaust	**0.38 to 0.48 mm (0.0150 to 0.0189 in.)**

(2) Record any out-of-specification valve clearance measurements. They will be used later to determine the required replacement valve lifters.

10. ADJUST VALVE CLEARANCE
(a) Remove the No. 2 camshaft (see page EM-38).
(b) Remove the camshaft (see page EM-38).
(c) Remove the valve lifters.

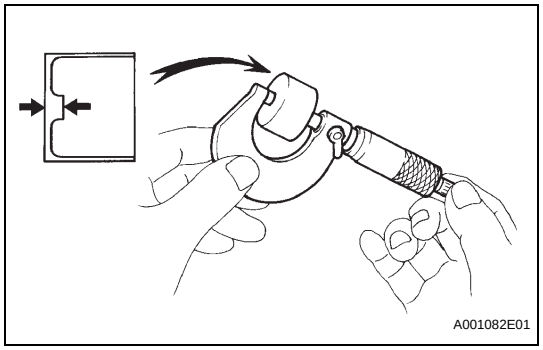

(d) Using a micrometer, measure the thickness of the removed valve lifters.
(e) Calculate the thickness of a new lifter so that the valve clearance comes within the specified values.
New lifter thickness

Item	Specification
Intake	**A = B + (C - 0.24 mm (0.0095 in.))**
Exhaust	**A = B + (C - 0.43 mm (0.0169 in.))**

A	New lifter thickness
B	Used lifter thickness
C	Measured valve clearance

CALCULATION EXAMPLE (Intake):
1. Measured intake valve clearance = 0.40 mm (0.0158 in.)
(Measured - Specification = Excess clearance)
(a) 0.40 mm (0.0158 in.) - 0.24 mm (0.0095 in.) = 0.16 mm (0.0063 in.)
2. Measured used lifter measurement = 5.250 mm (0.2067 in.)
3. New lifter thickness = 5.410 mm (0.2130 in.)
(Excess clearance + Used lifter thickness = Ideal new lifter)
(a) 0.16 mm (0.0063 in.) + 5.250 mm (0.2067 in.) = 5.410 mm (0.2130 in.)
4. Closest new lifter = 5.420 mm (0.2134 in.)
– Select No. 42 lifter

EM

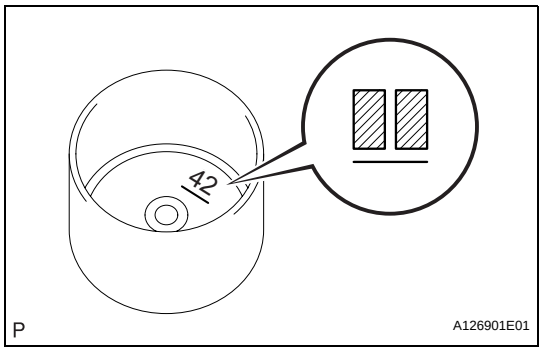

(f) Select a new lifter with a thickness as close as possible to the calculated values.
HINT:
- Lifters are available in 35 sizes in increments of 0.020 mm (0.0008 in.), from 5.060 to 5.740 mm (0.1992 to 0.2260 in.).
- The identification number inside the valve lifters shows the value to 2 decimal places. (The illustration shows 5.420 mm (0.2134 in.)

(g) Valve lifter selection chart (intake).

Installed lifter thickness mm (in.) \ Measured clearance mm (in.)	0.000 - 0.030 (0.0000 - 0.0012)	0.031 - 0.050 (0.0012 - 0.0020)	0.051 - 0.070 (0.0020 - 0.0028)	0.071 - 0.090 (0.0028 - 0.0035)	0.091 - 0.110 (0.0036 - 0.0043)	0.111 - 0.130 (0.0044 - 0.0051)	0.131 - 0.150 (0.0052 - 0.0059)	0.151 - 0.170 (0.0059 - 0.0067)	0.171 - 0.189 (0.0067 - 0.0074)	0.190 - 0.290 (0.0075 - 0.0114)	0.291 - 0.310 (0.0115 - 0.0122)	0.311 - 0.330 (0.0122 - 0.0130)	0.331 - 0.350 (0.0130 - 0.0138)	0.351 - 0.370 (0.0138 - 0.0146)	0.371 - 0.390 (0.0146 - 0.0154)	0.391 - 0.410 (0.0154 - 0.0161)	0.411 - 0.430 (0.0162 - 0.0169)	0.431 - 0.450 (0.0170 - 0.0177)	0.451 - 0.470 (0.0178 - 0.0185)	0.471 - 0.490 (0.0185 - 0.0193)	0.491 - 0.510 (0.0193 - 0.0201)	0.511 - 0.530 (0.0201 - 0.0209)	0.531 - 0.550 (0.0209 - 0.0217)	0.551 - 0.570 (0.0217 - 0.0224)	0.571 - 0.590 (0.0225 - 0.0232)	0.591 - 0.610 (0.0233 - 0.0240)	0.611 - 0.630 (0.0241 - 0.0248)	0.631 - 0.650 (0.0248 - 0.0256)	0.651 - 0.670 (0.0256 - 0.0264)	0.671 - 0.690 (0.0264 - 0.0272)	0.691 - 0.710 (0.0272 - 0.0280)	0.711 - 0.730 (0.0280 - 0.0287)	0.731 - 0.750 (0.0288 - 0.0295)	0.751 - 0.770 (0.0296 - 0.0303)	0.771 - 0.790 (0.0304 - 0.0311)	0.791 - 0.810 (0.0311 - 0.0319)	0.811 - 0.830 (0.0319 - 0.0327)	0.831 - 0.850 (0.0327 - 0.0335)	0.851 - 0.870 (0.0335 - 0.0343)	0.871 - 0.890 (0.0343 - 0.0350)	0.891 - 0.910 (0.0351 - 0.0358)	0.911 - 0.930 (0.0359 - 0.0366)
5.060 (0.1992)											12	14	16	18	20	22	24	26	28	30	32	34	36	38	40	42	44	46	48	50	52	54	56	58	60	62	64	66	68	70	72	74
5.080 (0.2000)									06		14	16	18	20	22	24	26	28	30	32	34	36	38	40	42	44	46	48	50	52	54	56	58	60	62	64	66	68	70	72	74	
5.100 (0.2008)								06	08		16	18	20	22	24	26	28	30	32	34	36	38	40	42	44	46	48	50	52	54	56	58	60	62	64	66	68	70	72	74		
5.120 (0.2016)							06	08	10		18	20	22	24	26	28	30	32	34	36	38	40	42	44	46	48	50	52	54	56	58	60	62	64	66	68	70	72	74			
5.140 (0.2024)						06	08	10	12		20	22	24	26	28	30	32	34	36	38	40	42	44	46	48	50	52	54	56	58	60	62	64	66	68	70	72	74				
5.160 (0.2031)					06	08	10	12	14		22	24	26	28	30	32	34	36	38	40	42	44	46	48	50	52	54	56	58	60	62	64	66	68	70	72	74					
5.180 (0.2039)				06	08	10	12	14	16		24	26	28	30	32	34	36	38	40	42	44	46	48	50	52	54	56	58	60	62	64	66	68	70	72	74						
5.200 (0.2047)			06	08	10	12	14	16	18		26	28	30	32	34	36	38	40	42	44	46	48	50	52	54	56	58	60	62	64	66	68	70	72	74							
5.210 (0.2051)		06	08	10	12	14	16	18	20		28	30	32	34	36	38	40	42	44	46	48	50	52	54	56	58	60	62	64	66	68	70	72	74	74							
5.220 (0.2055)		06	08	10	12	14	16	18	20		28	30	32	34	36	38	40	42	44	46	48	50	52	54	56	58	60	62	64	66	68	70	72	74	74							
5.230 (0.2059)		06	08	10	12	14	16	18	20		30	32	34	36	38	40	42	44	46	48	50	52	54	56	58	60	62	64	66	68	70	72	74	74								
5.240 (0.2063)		08	10	12	14	16	18	20	22		30	32	34	36	38	40	42	44	46	48	50	52	54	56	58	60	62	64	66	68	70	72	74	74								
5.250 (0.2067)	06	08	10	12	14	16	18	20	22		32	34	36	38	40	42	44	46	48	50	52	54	56	58	60	62	64	66	68	70	72	74	74									
5.260 (0.2071)	06	10	12	14	16	18	20	22	24		32	34	36	38	40	42	44	46	48	50	52	54	56	58	60	62	64	66	68	70	72	74	74									
5.270 (0.2075)	08	10	12	14	16	18	20	22	24		34	36	38	40	42	44	46	48	50	52	54	56	58	60	62	64	66	68	70	72	74	74										
5.280 (0.2079)	08	12	14	16	18	20	22	24	26		34	36	38	40	42	44	46	48	50	52	54	56	58	60	62	64	66	68	70	72	74	74										
5.290 (0.2083)	10	12	14	16	18	20	22	24	26		36	38	40	42	44	46	48	50	52	54	56	58	60	62	64	66	68	70	72	74	74											
5.300 (0.2087)	10	14	16	18	20	22	24	26	28		36	38	40	42	44	46	48	50	52	54	56	58	60	62	64	66	68	70	72	74	74											
5.310 (0.2091)	12	14	16	18	20	22	24	26	28		38	40	42	44	46	48	50	52	54	56	58	60	62	64	66	68	70	72	74	74												
5.320 (0.2094)	12	16	18	20	22	24	26	28	30		38	40	42	44	46	48	50	52	54	56	58	60	62	64	66	68	70	72	74	74												
5.330 (0.2098)	14	16	18	20	22	24	26	28	30		40	42	44	46	48	50	52	54	56	58	60	62	64	66	68	70	72	74	74													
5.340 (0.2102)	14	18	20	22	24	26	28	30	32		40	42	44	46	48	50	52	54	56	58	60	62	64	66	68	70	72	74	74													
5.350 (0.2106)	16	18	20	22	24	26	28	30	32		42	44	46	48	50	52	54	56	58	60	62	64	66	68	70	72	74	74														
5.360 (0.2110)	16	20	22	24	26	28	30	32	34		42	44	46	48	50	52	54	56	58	60	62	64	66	68	70	72	74	74														
5.370 (0.2114)	18	20	22	24	26	28	30	32	34		44	46	48	50	52	54	56	58	60	62	64	66	68	70	72	74	74															
5.380 (0.2118)	18	22	24	26	28	30	32	34	36		44	46	48	50	52	54	56	58	60	62	64	66	68	70	72	74	74															
5.390 (0.2122)	20	22	24	26	28	30	32	34	36		46	48	50	52	54	56	58	60	62	64	66	68	70	72	74	74																
5.400 (0.2126)	20	24	26	28	30	32	34	36	38		46	48	50	52	54	56	58	60	62	64	66	68	70	72	74	74																
5.410 (0.2130)	22	24	26	28	30	32	34	36	38		48	50	52	54	56	58	60	62	64	66	68	70	72	74	74																	
5.420 (0.2134)	22	26	28	30	32	34	36	38	40		48	50	52	54	56	58	60	62	64	66	68	70	72	74	74																	
5.430 (0.2138)	24	26	28	30	32	34	36	38	40		50	52	54	56	58	60	62	64	66	68	70	72	74	74																		
5.440 (0.2142)	24	28	30	32	34	36	38	40	42		50	52	54	56	58	60	62	64	66	68	70	72	74	74																		
5.450 (0.2146)	26	28	30	32	34	36	38	40	42		52	54	56	58	60	62	64	66	68	70	72	74	74																			
5.460 (0.2150)	26	30	32	34	36	38	40	42	44		52	54	56	58	60	62	64	66	68	70	72	74	74																			
5.470 (0.2154)	28	30	32	34	36	38	40	42	44		54	56	58	60	62	64	66	68	70	72	74	74																				
5.480 (0.2157)	28	32	34	36	38	40	42	44	46		54	56	58	60	62	64	66	68	70	72	74	74																				
5.490 (0.2161)	30	32	34	36	38	40	42	44	46		56	58	60	62	64	66	68	70	72	74	74																					
5.500 (0.2165)	30	34	36	38	40	42	44	46	48		56	58	60	62	64	66	68	70	72	74	74																					
5.510 (0.2169)	32	34	36	38	40	42	44	46	48		58	60	62	64	66	68	70	72	74	74																						
5.520 (0.2173)	32	36	38	40	42	44	46	48	50		58	60	62	64	66	68	70	72	74	74																						
5.530 (0.2177)	34	36	38	40	42	44	46	48	50		60	62	64	66	68	70	72	74	74																							
5.540 (0.2181)	34	38	40	42	44	46	48	50	52		60	62	64	66	68	70	72	74	74																							
5.550 (0.2185)	36	38	40	42	44	46	48	50	52		62	64	66	68	70	72	74	74																								
5.560 (0.2189)	36	40	42	44	46	48	50	52	54		62	64	66	68	70	72	74	74																								
5.570 (0.2193)	38	40	42	44	46	48	50	52	54		64	66	68	70	72	74	74																									
5.580 (0.2197)	38	42	44	46	48	50	52	54	56		64	66	68	70	72	74	74																									
5.590 (0.2201)	40	42	44	46	48	50	52	54	56		66	68	70	72	74	74																										
5.600 (0.2205)	40	44	46	48	50	52	54	56	58		66	68	70	72	74	74																										
5.620 (0.2213)	42	46	48	50	52	54	56	58	60		68	70	72	74	74																											
5.640 (0.2220)	44	48	50	52	54	56	58	60	62		70	72	74	74	74																											
5.660 (0.2228)	46	50	52	54	56	58	60	62	64		72	74	74	74																												
5.680 (0.2236)	48	52	54	56	58	60	62	64	66		74	74	74																													
5.700 (0.2244)	50	54	56	58	60	62	64	66	68		74	74																														
5.720 (0.2252)	52	56	58	60	62	64	66	68	70		74																															
5.740 (0.2260)	54	58	60	62	64	66	68	70	72																																	

G

A126931E02

New lifter thickness

Lifter No.	Thickness mm (in.)	Lifter No.	Thickness mm (in.)	Lifter No.	Thickness mm (in.)
06	5.060 (0.1992)	30	5.300 (0.2087)	54	5.540 (0.2181)

EM

Lifter No.	Thickness mm (in.)	Lifter No.	Thickness mm (in.)	Lifter No.	Thickness mm (in.)
08	5.080 (0.2000)	32	5.320 (0.2094)	56	5.560 (0.2189)
10	5.100 (0.2008)	34	5.340 (0.2102)	58	5.580 (0.2197)
12	5.120 (0.2016)	36	5.360 (0.2110)	60	5.600 (0.2205)
14	5.140 (0.2024)	38	5.380 (0.2118)	62	5.620 (0.2213)
16	5.160 (0.2031)	40	5.400 (0.2126)	64	5.640 (0.2220)
18	5.180 (0.2039)	42	5.420 (0.2134)	66	5.660 (0.2228)
20	5.200 (0.2047)	44	5.440 (0.2142)	68	5.680 (0.2236)
22	5.220 (0.2055)	46	5.460 (0.2150)	70	5.700 (0.2244)
24	5.240 (0.2063)	48	5.480 (0.2157)	72	5.720 (0.2252)
26	5.260 (0.2071)	50	5.500 (0.2165)	74	5.740 (0.2260)
28	5.280 (0.2079)	52	5.520 (0.2173)	-	-

Standard intake valve clearance (cold):
0.19 to 0.29 mm (0.0075 to 0.0114 in.)

EXAMPLE:
The 5.250 mm (0.2067 in.) lifter is installed, and the measured clearance is 0.400 mm (0.0157 in.). Replace the 5.250 mm (0.2067 in.) lifter with a new No. 42 lifter.

(h) Valve lifter selection chart (exhaust).

Installed lifter thickness mm (in.) \ Measured clearance mm (in.)	0.000 - 0.030 (0.0000 - 0.0012)	0.031 - 0.050 (0.0012 - 0.0020)	0.051 - 0.070 (0.0020 - 0.0028)	0.071 - 0.090 (0.0028 - 0.0035)	0.091 - 0.110 (0.0036 - 0.0043)	0.111 - 0.130 (0.0044 - 0.0051)	0.131 - 0.150 (0.0052 - 0.0059)	0.151 - 0.170 (0.0059 - 0.0067)	0.171 - 0.190 (0.0067 - 0.0075)	0.191 - 0.210 (0.0075 - 0.0083)	0.211 - 0.230 (0.0083 - 0.0091)	0.231 - 0.250 (0.0091 - 0.0098)	0.251 - 0.270 (0.0099 - 0.0106)	0.271 - 0.290 (0.0107 - 0.0114)	0.291 - 0.299 (0.0115 - 0.0118)	0.300 - 0.400 (0.0118 - 0.0157)	0.401 - 0.420 (0.0158 - 0.0165)	0.421 - 0.440 (0.0166 - 0.0173)	0.441 - 0.460 (0.0174 - 0.0181)	0.461 - 0.480 (0.0181 - 0.0189)	0.481 - 0.500 (0.0189 - 0.0197)	0.501 - 0.520 (0.0197 - 0.0205)	0.521 - 0.540 (0.0205 - 0.0213)	0.541 - 0.560 (0.0213 - 0.0220)	0.561 - 0.580 (0.0221 - 0.0228)	0.581 - 0.600 (0.0229 - 0.0236)	0.601 - 0.620 (0.0237 - 0.0244)	0.621 - 0.640 (0.0244 - 0.0252)	0.641 - 0.660 (0.0252 - 0.0260)	0.661 - 0.680 (0.0260 - 0.0268)	0.681 - 0.700 (0.0268 - 0.0276)	0.701 - 0.720 (0.0276 - 0.0283)	0.721 - 0.740 (0.0284 - 0.0291)	0.741 - 0.760 (0.0292 - 0.0299)	0.761 - 0.780 (0.0300 - 0.0307)	0.781 - 0.800 (0.0307 - 0.0315)	0.801 - 0.820 (0.0315 - 0.0323)	0.821 - 0.840 (0.0323 - 0.0331)	0.841 - 0.860 (0.0331 - 0.0339)	0.861 - 0.880 (0.0339 - 0.0346)	0.881 - 0.900 (0.0347 - 0.0354)	0.901 - 0.920 (0.0355 - 0.0362)	0.921 - 0.940 (0.0363 - 0.0370)	0.941 - 0.960 (0.0370 - 0.0378)	0.961 - 0.980 (0.0378 - 0.0386)	0.981 - 1.000 (0.0386 - 0.0394)	1.001 - 1.020 (0.0394 - 0.0402)	1.021 - 1.040 (0.0402 - 0.0409)	1.041 - 1.060 (0.0410 - 0.0417)	1.061 - 1.080 (0.0418 - 0.0425)
5.060 (0.1992)																										28	30	32	34	36	38	40	42	44	46	48	50	52	54	56	58	60	62	64	66	68	70	72	74	74	74
5.080 (0.2000)															06		14	16	18	20	22	24	26	28	30	32	34	36	38	40	42	44	46	48	50	52	54	56	58	60	62	64	66	68	70	72	74	74	74
5.100 (0.2008)														06	08		16	18	20	22	24	26	28	30	32	34	36	38	40	42	44	46	48	50	52	54	56	58	60	62	64	66	68	70	72	74	74	74	
5.120 (0.2016)													06	08	10		18	20	22	24	26	28	30	32	34	36	38	40	42	44	46	48	50	52	54	56	58	60	62	64	66	68	70	72	74	74	74		
5.140 (0.2024)												06	08	10	12		20	22	24	26	28	30	32	34	36	38	40	42	44	46	48	50	52	54	56	58	60	62	64	66	68	70	72	74	74	74			
5.160 (0.2031)											06	08	10	12	14		22	24	26	28	30	32	34	36	38	40	42	44	46	48	50	52	54	56	58	60	62	64	66	68	70	72	74	74	74				
5.180 (0.2039)										06	08	10	12	14	16		24	26	28	30	32	34	36	38	40	42	44	46	48	50	52	54	56	58	60	62	64	66	68	70	72	74	74	74					
5.200 (0.2047)								06	08	10	12	14	16	18			26	28	30	32	34	36	38	40	42	44	46	48	50	52	54	56	58	60	62	64	66	68	70	72	74	74	74						
5.210 (0.2051)							06	08	10	12	14	16	18	20			26	28	30	32	34	36	38	40	42	44	46	48	50	52	54	56	58	60	62	64	66	68	70	72	74	74	74						
5.220 (0.2055)							06	08	10	12	14	16	18	20			28	30	32	34	36	38	40	42	44	46	48	50	52	54	56	58	60	62	64	66	68	70	72	74	74	74							
5.230 (0.2059)							06	08	10	12	14	16	18	20	22		28	30	32	34	36	38	40	42	44	46	48	50	52	54	56	58	60	62	64	66	68	70	72	74	74	74							
5.240 (0.2063)							06	08	10	12	14	16	18	20	22		30	32	34	36	38	40	42	44	46	48	50	52	54	56	58	60	62	64	66	68	70	72	74	74	74								
5.250 (0.2067)						06	08	10	12	14	16	18	20	22	24		30	32	34	36	38	40	42	44	46	48	50	52	54	56	58	60	62	64	66	68	70	72	74	74	74								
5.260 (0.2071)						06	08	10	12	14	16	18	20	22	24		32	34	36	38	40	42	44	46	48	50	52	54	56	58	60	62	64	66	68	70	72	74	74	74									
5.270 (0.2075)					06	08	10	12	14	16	18	20	22	24	26		32	34	36	38	40	42	44	46	48	50	52	54	56	58	60	62	64	66	68	70	72	74	74	74									
5.280 (0.2079)					06	08	10	12	14	16	18	20	22	24	26		34	36	38	40	42	44	46	48	50	52	54	56	58	60	62	64	66	68	70	72	74	74	74										
5.290 (0.2083)				06	08	10	12	14	16	18	20	22	24	26	28		34	36	38	40	42	44	46	48	50	52	54	56	58	60	62	64	66	68	70	72	74	74	74										
5.300 (0.2087)				06	08	10	12	14	16	18	20	22	24	26	28		36	38	40	42	44	46	48	50	52	54	56	58	60	62	64	66	68	70	72	74	74	74											
5.310 (0.2091)			06	08	10	12	14	16	18	20	22	24	26	28	30		36	38	40	42	44	46	48	50	52	54	56	58	60	62	64	66	68	70	72	74	74	74											
5.320 (0.2094)			06	08	10	12	14	16	18	20	22	24	26	28	30		38	40	42	44	46	48	50	52	54	56	58	60	62	64	66	68	70	72	74	74	74												
5.330 (0.2098)		06	08	10	12	14	16	18	20	22	24	26	28	30	32		38	40	42	44	46	48	50	52	54	56	58	60	62	64	66	68	70	72	74	74	74												
5.340 (0.2102)		06	08	10	12	14	16	18	20	22	24	26	28	30	32		40	42	44	46	48	50	52	54	56	58	60	62	64	66	68	70	72	74	74	74													
5.350 (0.2106)	06	08	10	12	14	16	18	20	22	24	26	28	30	32	34		40	42	44	46	48	50	52	54	56	58	60	62	64	66	68	70	72	74	74	74													
5.360 (0.2110)	06	08	10	12	14	16	18	20	22	24	26	28	30	32	34		42	44	46	48	50	52	54	56	58	60	62	64	66	68	70	72	74	74	74														
5.370 (0.2114)	08	10	12	14	16	18	20	22	24	26	28	30	32	34	36		42	44	46	48	50	52	54	56	58	60	62	64	66	68	70	72	74	74	74														
5.380 (0.2118)	08	10	12	14	16	18	20	22	24	26	28	30	32	34	36		44	46	48	50	52	54	56	58	60	62	64	66	68	70	72	74	74	74															
5.390 (0.2122)	10	12	14	16	18	20	22	24	26	28	30	32	34	36	38		44	46	48	50	52	54	56	58	60	62	64	66	68	70	72	74	74	74															
5.400 (0.2126)	10	12	14	16	18	20	22	24	26	28	30	32	34	36	38		46	48	50	52	54	56	58	60	62	64	66	68	70	72	74	74	74																
5.410 (0.2130)	12	14	16	18	20	22	24	26	28	30	32	34	36	38	40		46	48	50	52	54	56	58	60	62	64	66	68	70	72	74	74	74																
5.420 (0.2134)	12	14	16	18	20	22	24	26	28	30	32	34	36	38	40		48	50	52	54	56	58	60	62	64	66	68	70	72	74	74	74																	
5.430 (0.2138)	14	16	18	20	22	24	26	28	30	32	34	36	38	40	42		48	50	52	54	56	58	60	62	64	66	68	70	72	74	74	74																	
5.440 (0.2142)	14	16	18	20	22	24	26	28	30	32	34	36	38	40	42		50	52	54	56	58	60	62	64	66	68	70	72	74	74	74																		
5.450 (0.2146)	16	18	20	22	24	26	28	30	32	34	36	38	40	42	44		50	52	54	56	58	60	62	64	66	68	70	72	74	74	74																		
5.460 (0.2150)	16	18	20	22	24	26	28	30	32	34	36	38	40	42	44		52	54	56	58	60	62	64	66	68	70	72	74	74	74																			
5.470 (0.2154)	18	20	22	24	26	28	30	32	34	36	38	40	42	44	46		52	54	56	58	60	62	64	66	68	70	72	74	74	74																			
5.480 (0.2157)	18	20	22	24	26	28	30	32	34	36	38	40	42	44	46		54	56	58	60	62	64	66	68	70	72	74	74	74																				
5.490 (0.2161)	20	22	24	26	28	30	32	34	36	38	40	42	44	46	48		54	56	58	60	62	64	66	68	70	72	74	74	74																				
5.500 (0.2165)	20	22	24	26	28	30	32	34	36	38	40	42	44	46	48		56	58	60	62	64	66	68	70	72	74	74	74																					
5.510 (0.2169)	22	24	26	28	30	32	34	36	38	40	42	44	46	48	50		56	58	60	62	64	66	68	70	72	74	74	74																					
5.520 (0.2173)	22	24	26	28	30	32	34	36	38	40	42	44	46	48	50		58	60	62	64	66	68	70	72	74	74	74																						
5.530 (0.2177)	24	26	28	30	32	34	36	38	40	42	44	46	48	50	52		58	60	62	64	66	68	70	72	74	74	74																						
5.540 (0.2181)	24	26	28	30	32	34	36	38	40	42	44	46	48	50	52		60	62	64	66	68	70	72	74	74	74																							
5.550 (0.2185)	26	28	30	32	34	36	38	40	42	44	46	48	50	52	54		60	62	64	66	68	70	72	74	74	74																							
5.560 (0.2189)	26	28	30	32	34	36	38	40	42	44	46	48	50	52	54		62	64	66	68	70	72	74	74	74																								
5.570 (0.2193)	28	30	32	34	36	38	40	42	44	46	48	50	52	54	56		62	64	66	68	70	72	74	74	74																								
5.580 (0.2197)	28	30	32	34	36	38	40	42	44	46	48	50	52	54	56		64	66	68	70	72	74	74	74																									
5.590 (0.2201)	30	32	34	36	38	40	42	44	46	48	50	52	54	56	58		64	66	68	70	72	74	74	74																									
5.600 (0.2205)	30	32	34	36	38	40	42	44	46	48	50	52	54	56	58		66	68	70	72	74	74	74																										
5.620 (0.2213)	32	34	36	38	40	42	44	46	48	50	52	54	56	58	60		68	70	72	74	74	74																											
5.640 (0.2220)	34	36	38	40	42	44	46	48	50	52	54	56	58	60	62		70	72	74	74	74																												
5.660 (0.2228)	36	38	40	42	44	46	48	50	52	54	56	58	60	62	64		72	74	74	74																													
5.680 (0.2236)	38	40	42	44	46	48	50	52	54	56	58	60	62	64	66		74	74	74																														
5.700 (0.2244)	40	42	44	46	48	50	52	54	56	58	60	62	64	66	68		74	74																															
5.720 (0.2252)	42	44	46	48	50	52	54	56	58	60	62	64	66	68	70		74																																
5.740 (0.2260)	44	46	48	50	52	54	56	58	60	62	64	66	68	70	72																																		

G

A114356E01

New lifter thickness

Lifter No.	Thickness mm (in.)	Lifter No.	Thickness mm (in.)	Lifter No.	Thickness mm (in.)
06	5.060 (0.1992)	30	5.300 (0.2087)	54	5.540 (0.2181)

EM

Lifter No.	Thickness mm (in.)	Lifter No.	Thickness mm (in.)	Lifter No.	Thickness mm (in.)
08	5.080 (0.2000)	32	5.320 (0.2094)	56	5.560 (0.2189)
10	5.100 (0.2008)	34	5.340 (0.2102)	58	5.580 (0.2197)
12	5.120 (0.2016)	36	5.360 (0.2110)	60	5.600 (0.2205)
14	5.140 (0.2024)	38	5.380 (0.2118)	62	5.620 (0.2213)
16	5.160 (0.2031)	40	5.400 (0.2126)	64	5.640 (0.2220)
18	5.180 (0.2039)	42	5.420 (0.2134)	66	5.660 (0.2228)
20	5.200 (0.2047)	44	5.440 (0.2142)	68	5.680 (0.2236)
22	5.220 (0.2055)	46	5.460 (0.2150)	70	5.700 (0.2244)
24	5.240 (0.2063)	48	5.480 (0.2157)	72	5.720 (0.2252)
26	5.260 (0.2071)	50	5.500 (0.2165)	74	5.740 (0.2260)
28	5.280 (0.2079)	52	5.520 (0.2173)	-	-

Standard exhaust valve clearance (cold):
0.38 to 0.48 mm (0.0150 to 0.0189 in.)

EXAMPLE:
The 5.340 mm (0.2102 in.) lifter is installed, and the measured clearance is 0.430 mm (0.0169 in.). Replace the 5.340 mm (0.2102 in.) lifter with a new No. 42 lifter.

(i) Install the selected valve lifter.

11. INSTALL CAMSHAFT

(a) Apply a light coat of engine oil to the journal portion of the camshaft.

(b) Install the timing chain onto the camshaft timing gear with the paint mark aligned with the timing mark on the camshaft timing gear as shown in the illustration.

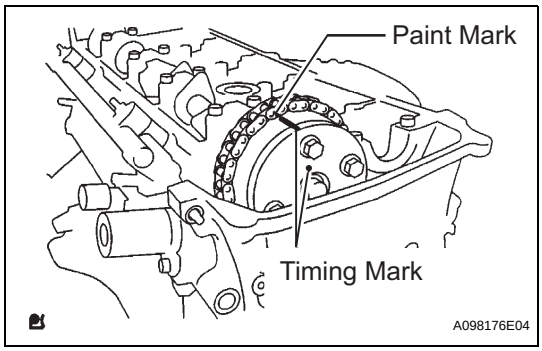

(c) Examine the front marks and numbers, and check that the order is as shown in the illustration. Then install the bearing caps into the cylinder head.

(d) Apply a light coat of engine oil to the threads and under the heads of the bearing cap bolts.

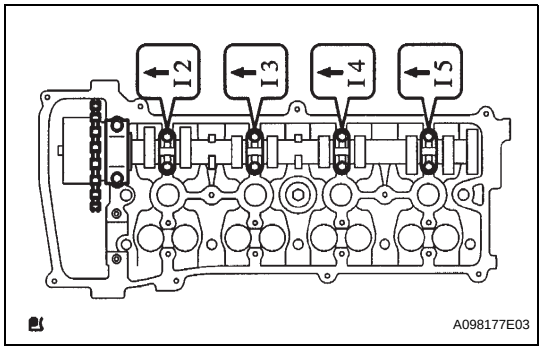

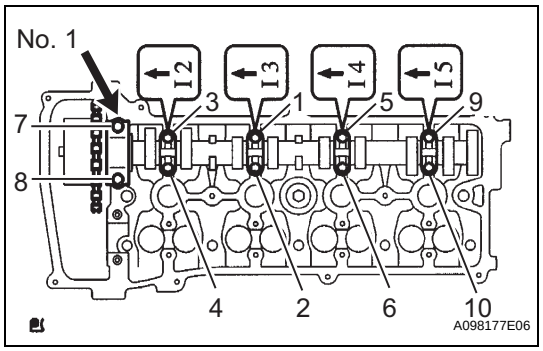

(e) Using several steps, uniformly tighten the 10 bearing cap bolts in the sequence shown in the illustration.

Torque: No. 1 bearing cap
30 N*m (301 kgf*cm, 22 ft.*lbf)
No. 3 bearing cap
9.0 N*m (92 kgf*cm, 80 in.*lbf)

12. INSTALL NO. 2 CAMSHAFT

(a) Apply a light coat of engine oil to the journal portion of the No. 2 camshaft.

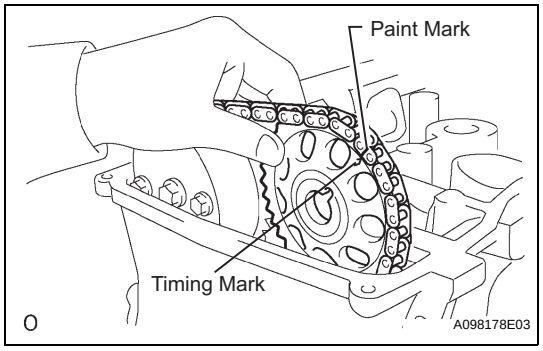

(b) Put the No. 2 camshaft on the cylinder head with the paint mark of the chain aligned with the timing mark on the camshaft timing sprocket.

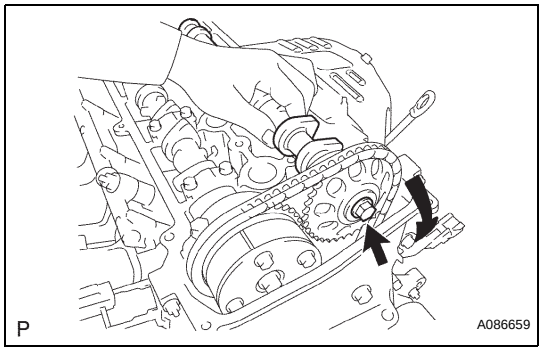

(c) While holding the No. 2 camshaft by hand, temporarily tighten the camshaft timing sprocket set bolt.

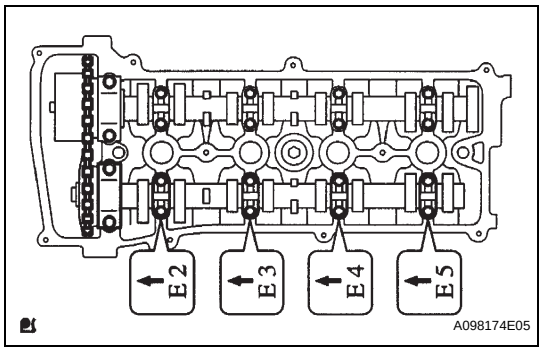

(d) Examine the front marks and numbers, and check that the order is as shown in the illustration. Then install the bearing caps onto the cylinder head.

(e) Apply a light coat of engine oil to the threads and under the heads of the bearing cap bolts.

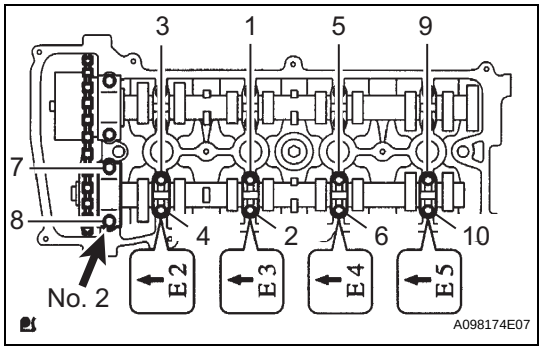

(f) Using several steps, uniformly tighten the 10 bearing cap bolts in the sequence shown in the illustration.

Torque: No. 2 bearing cap
30 N*m (301 kgf*cm, 22 ft.*lbf)
No. 3 bearing cap
9.0 N*m (92 kgf*cm, 80 in.*lbf)

EM

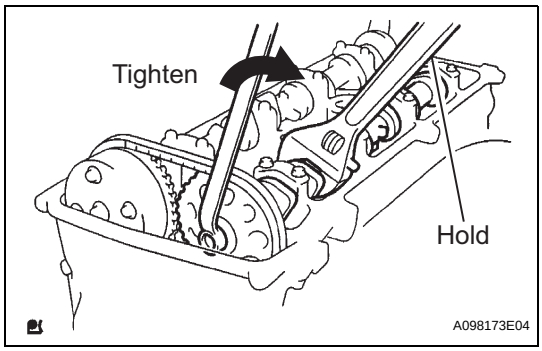

(g) While holding the camshaft with a wrench, tighten the camshaft timing sprocket set bolt.
Torque: 54 N*m (551 kgf*cm, 40 ft.*lbf)
NOTICE:
Be careful not to damage the valve lifter.

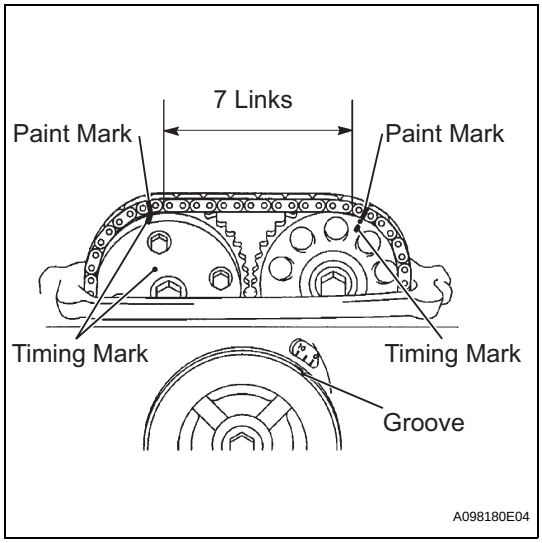

(h) Check that the paint marks on the chain are aligned with the timing marks on the camshaft timing gear and camshaft timing sprocket. Also, check that the crankshaft pulley groove is aligned with the timing mark "0" of the timing chain cover.

13. INSTALL NO. 1 CHAIN TENSIONER (See page EM-32)

14. INSTALL CYLINDER HEAD COVER SUB-ASSEMBLY (See page EM-33)

15. INSTALL IGNITION COIL ASSEMBLY (See page EM-33)

16. CHECK FOR ENGINE OIL LEAKS

17. INSTALL NO. 1 ENGINE COVER (See page EM-121)

18. INSTALL FRONT FENDER APRON RH

19. INSTALL ENGINE UNDER COVER LH

20. INSTALL ENGINE UNDER COVER RH

21. INSTALL FRONT WHEEL RH

TIMING CHAIN

COMPONENTS

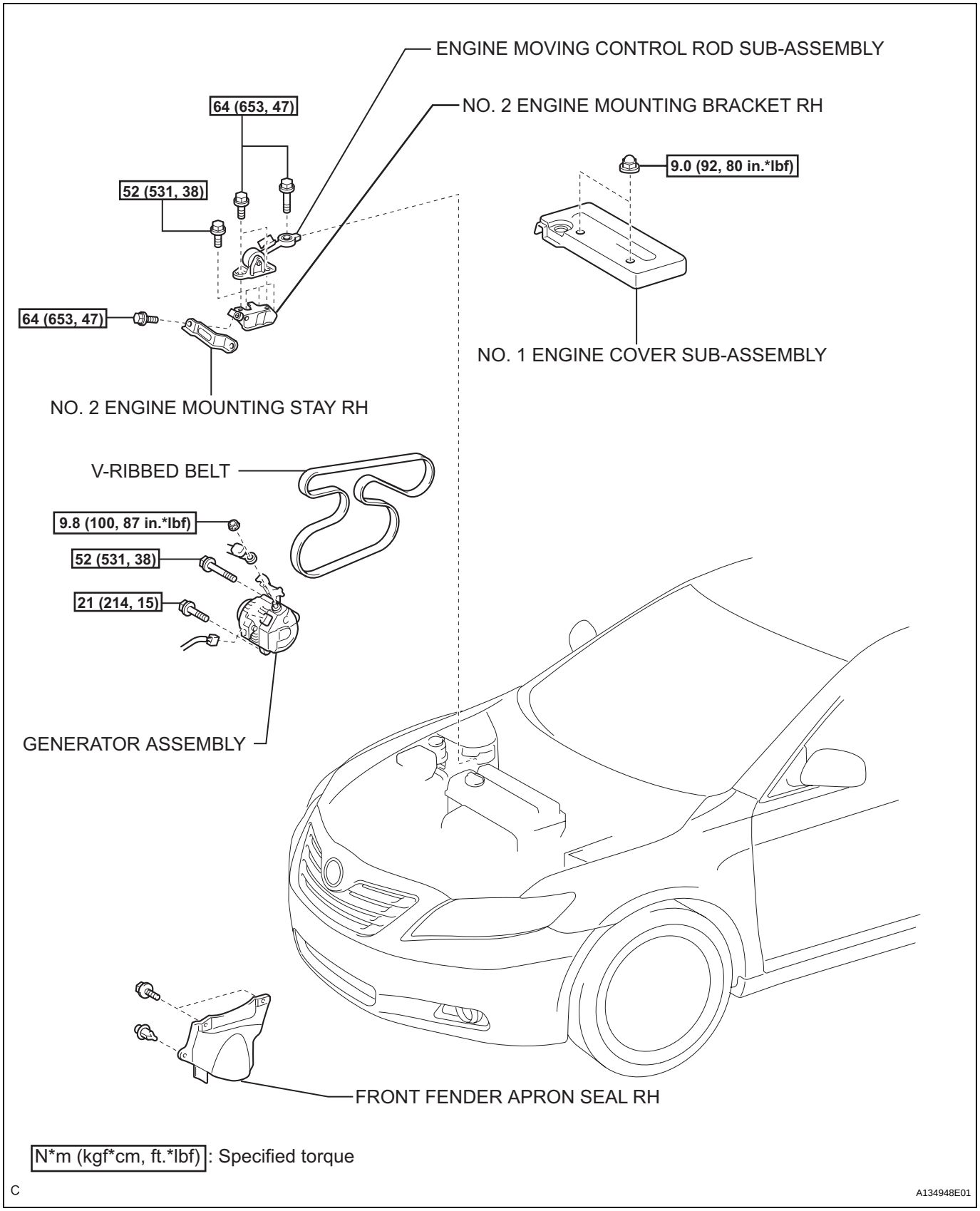

EM

EM

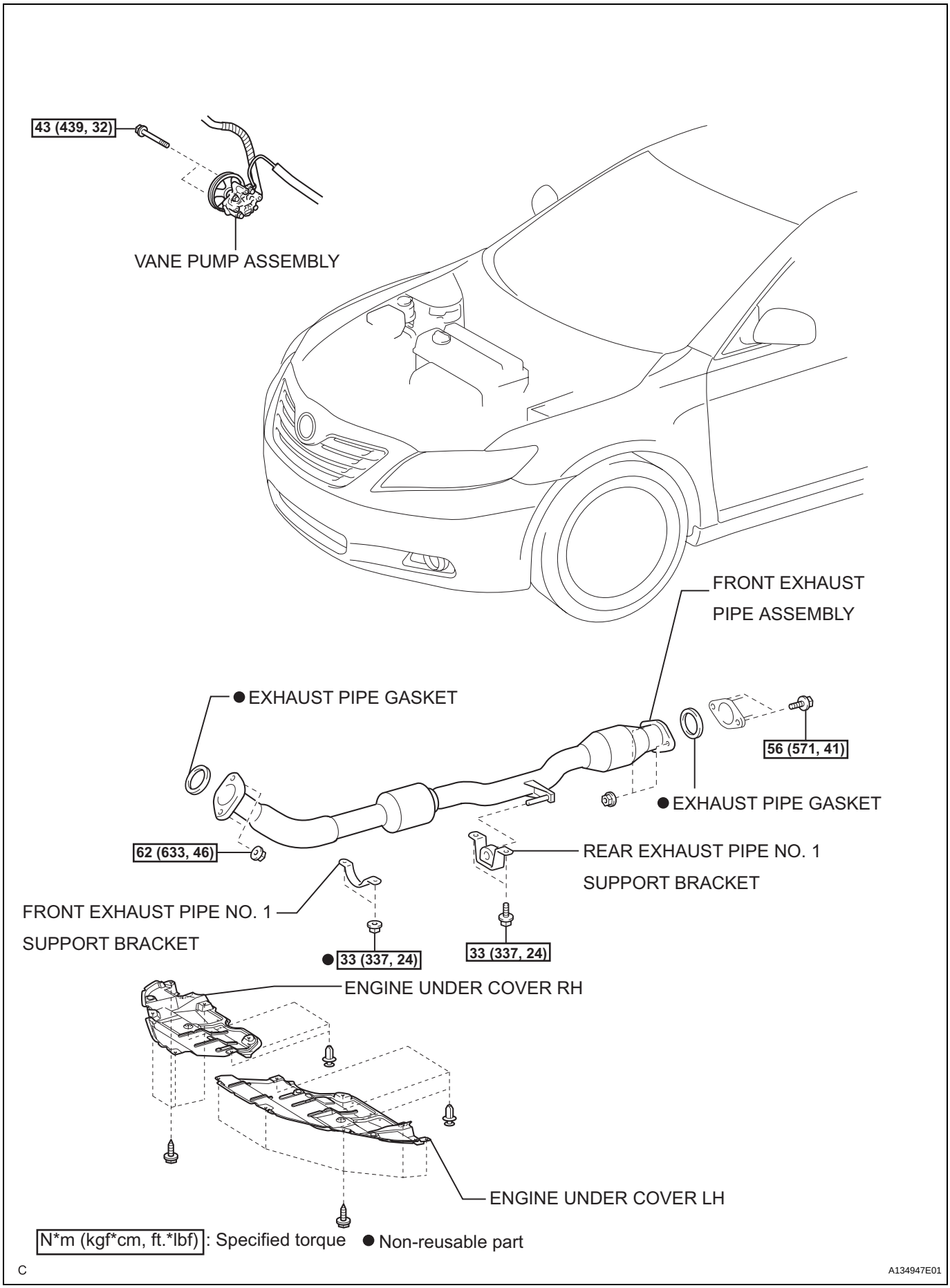
43 (439, 32)
VANE PUMP ASSEMBLY
FRONT EXHAUST PIPE ASSEMBLY
● EXHAUST PIPE GASKET
56 (571, 41)
● EXHAUST PIPE GASKET
62 (633, 46)
REAR EXHAUST PIPE NO. 1 SUPPORT BRACKET
FRONT EXHAUST PIPE NO. 1 SUPPORT BRACKET
● 33 (337, 24)
33 (337, 24)
ENGINE UNDER COVER RH
ENGINE UNDER COVER LH
N*m (kgf*cm, ft.*lbf): Specified torque
● Non-reusable part
C
A134947E01

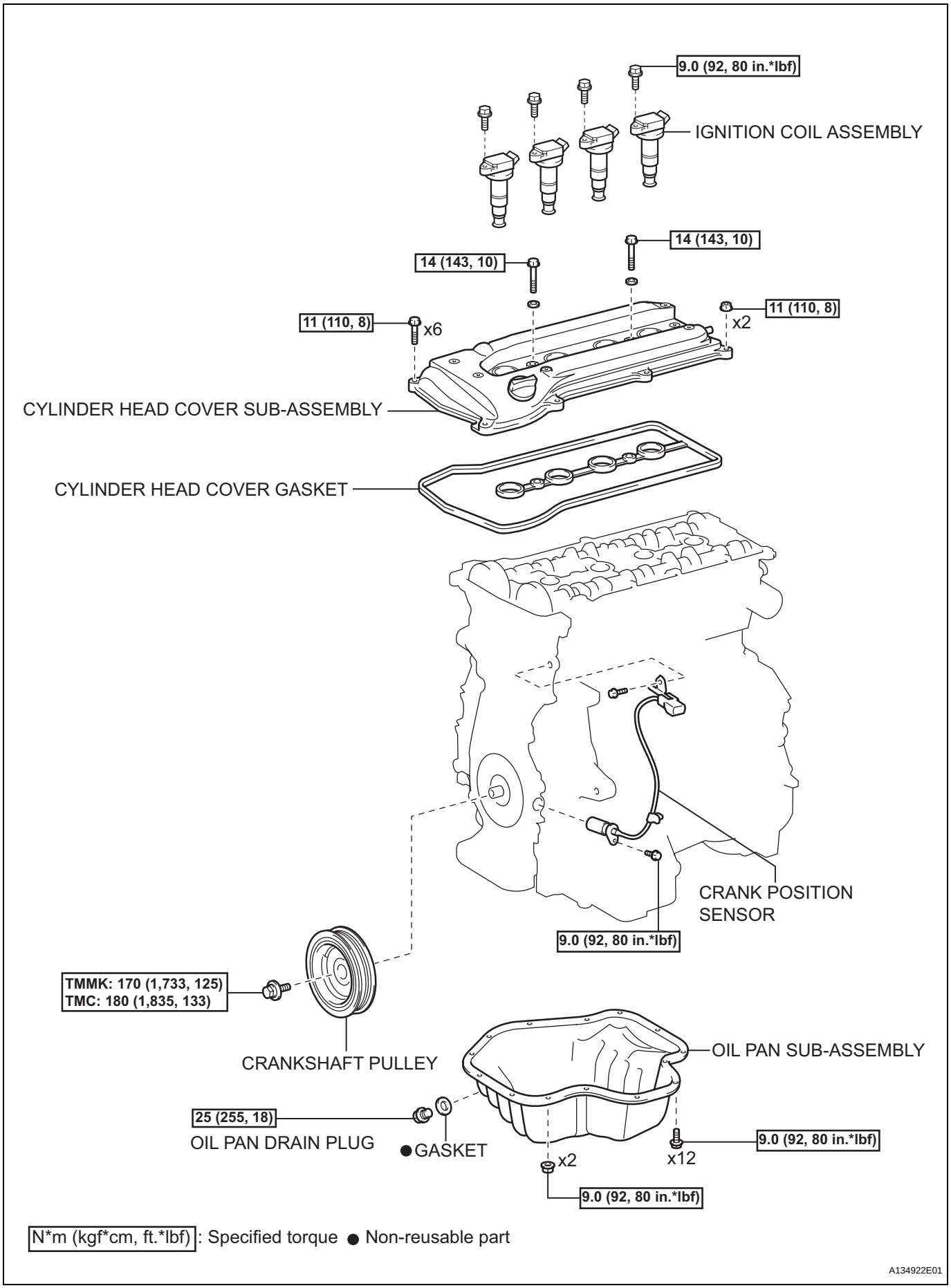
9.0 (92, 80 in.*lbf)
IGNITION COIL ASSEMBLY
14 (143, 10)
14 (143, 10)
11 (110, 8)
x6
11 (110, 8)
x2
CYLINDER HEAD COVER SUB-ASSEMBLY
CYLINDER HEAD COVER GASKET
CRANK POSITION SENSOR
9.0 (92, 80 in.*lbf)
TMMK: 170 (1,733, 125)
TMC: 180 (1,835, 133)
CRANKSHAFT PULLEY
OIL PAN SUB-ASSEMBLY
25 (255, 18)
OIL PAN DRAIN PLUG
●GASKET
x2
x12
9.0 (92, 80 in.*lbf)
9.0 (92, 80 in.*lbf)
N*m (kgf*cm, ft.*lbf): Specified torque ● Non-reusable part
A134922E01

EM

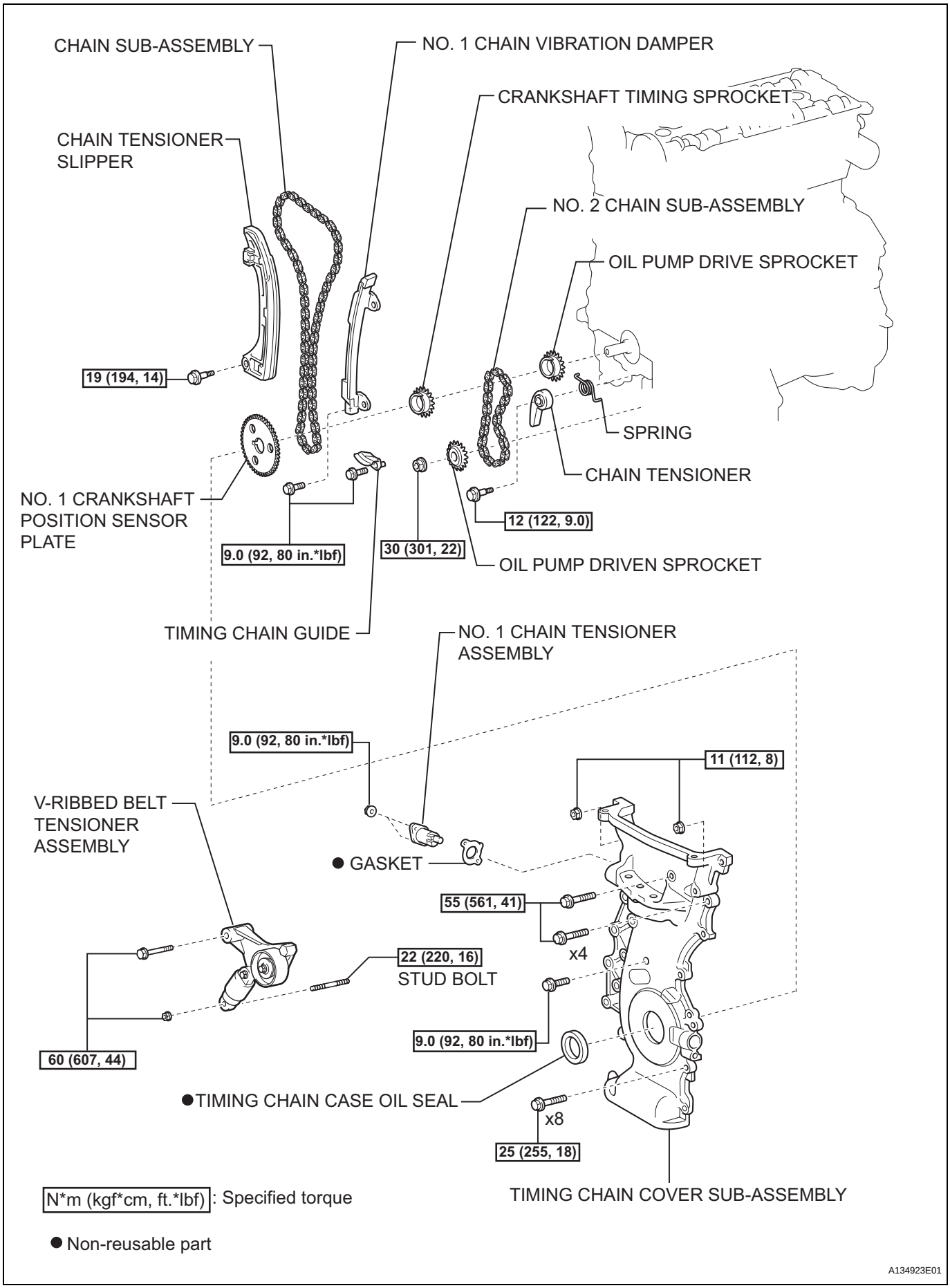
CHAIN SUB-ASSEMBLY
NO. 1 CHAIN VIBRATION DAMPER
CRANKSHAFT TIMING SPROCKET
CHAIN TENSIONER SLIPPER
NO. 2 CHAIN SUB-ASSEMBLY
OIL PUMP DRIVE SPROCKET
19 (194, 14)
SPRING
CHAIN TENSIONER
NO. 1 CRANKSHAFT POSITION SENSOR PLATE
12 (122, 9.0)
9.0 (92, 80 in.*lbf)
30 (301, 22)
OIL PUMP DRIVEN SPROCKET
TIMING CHAIN GUIDE
NO. 1 CHAIN TENSIONER ASSEMBLY
9.0 (92, 80 in.*lbf)
11 (112, 8)
V-RIBBED BELT TENSIONER ASSEMBLY
● GASKET
55 (561, 41)
x4
22 (220, 16)
STUD BOLT
9.0 (92, 80 in.*lbf)
60 (607, 44)
●TIMING CHAIN CASE OIL SEAL
x8
25 (255, 18)
TIMING CHAIN COVER SUB-ASSEMBLY
N*m (kgf*cm, ft.*lbf): Specified torque
● Non-reusable part
A134923E01

REMOVAL

1. **DISCONNECT CABLE FROM NEGATIVE BATTERY TERMINAL**
2. **REMOVE NO. 1 ENGINE COVER SUB-ASSEMBLY (See page EM-94)**
3. **REMOVE FRONT WHEEL RH**
4. **REMOVE ENGINE UNDER COVER LH**
5. **REMOVE ENGINE UNDER COVER RH**
6. **REMOVE FRONT FENDER APRON SEAL RH**
7. **DRAIN ENGINE OIL (See page LU-4)**
8. **REMOVE FRONT EXHAUST PIPE ASSEMBLY**
   HINT:
   See page EX-2.
9. **REMOVE NO. 2 ENGINE MOUNTING STAY RH (See page EM-95)**
10. **REMOVE ENGINE MOVING CONTROL ROD SUB-ASSEMBLY (See page EM-95)**
11. **REMOVE NO. 2 ENGINE MOUNTING BRACKET RH (See page EM-96)**
12. **REMOVE V-RIBBED BELT (See page EM-6)**
13. **REMOVE GENERATOR ASSEMBLY (See page CH-11)**
14. **REMOVE VANE PUMP ASSEMBLY (See page EM-101)**
15. **REMOVE IGNITION COIL ASSEMBLY (See page EM-106)**
16. **DISCONNECT VENTILATION HOSE**
17. **DISCONNECT NO. 2 VENTILATION HOSE**
18. **REMOVE CYLINDER HEAD COVER SUB-ASSEMBLY**
    (a) Remove the 2 bolts and disconnect the 2 engine wires.

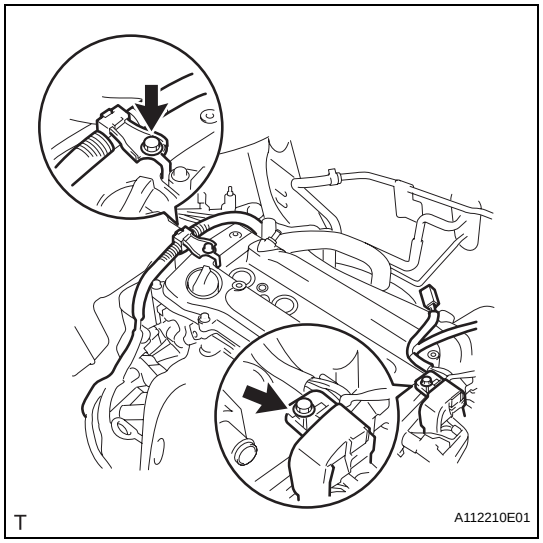

EM

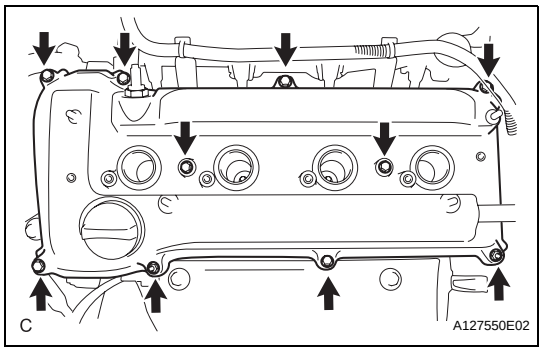

(b) Remove the 8 bolts, 2 nuts, and the cylinder head cover.

19. SET NO. 1 CYLINDER TO TDC/COMPRESSION (See page EM-8)

20. REMOVE CRANKSHAFT PULLEY (See page EM-75)

21. REMOVE CRANK POSITION SENSOR (See page ES-411)

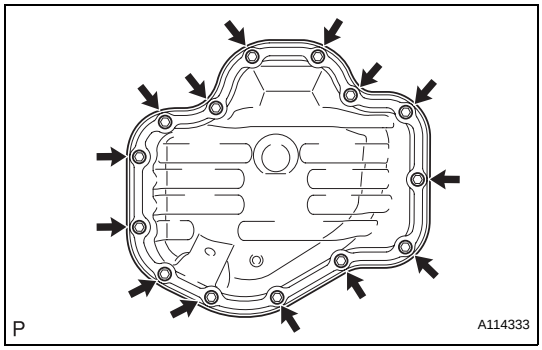

22. REMOVE OIL PAN SUB-ASSEMBLY

(a) Remove the 12 bolts and 2 nuts.

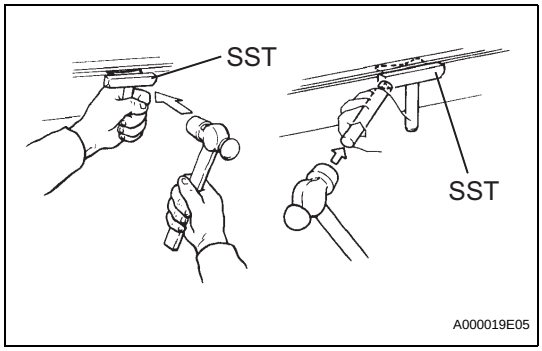

(b) Insert the blade of SST between the crankcase and oil pan. Cut through the sealer and remove the oil pan.

SST 09032-00100

NOTICE:

Be careful not to damage the contact surfaces of the crankcase, chain cover and oil pan.

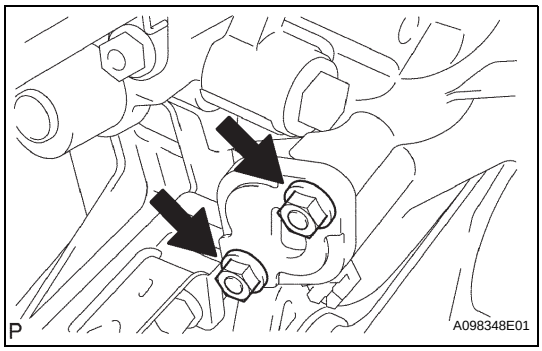

23. REMOVE NO. 1 CHAIN TENSIONER ASSEMBLY

(a) Remove the 2 nuts, tensioner and gasket.

NOTICE:

Do not turn the crankshaft without the chain tensioner.

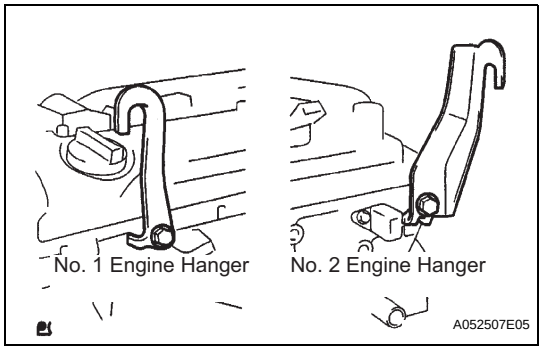

24. INSTALL ENGINE HANGERS

(a) Install the No. 1 engine hanger and No. 2 engine hanger with the bolts as shown in the illustration.

Parts No.:

No. 1 Engine hanger	12281-28010
No. 2 Engine hanger	12282-28010
Bolt	91512-61020

Torque: 38 N*m (387 kgf*cm, 28 ft.*lbf)

(b) Attach the sling device to the engine hangers and chain block.

EM

25. REMOVE V-RIBBED BELT TENSIONER ASSEMBLY

(a) Lift the engine upward using the chain block.
NOTICE:
Do not lift the engine more than necessary.

(b) Remove the bolt, nut and V-ribbed belt tensioner.

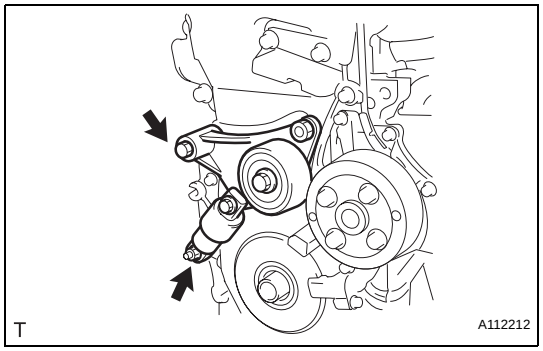

26. REMOVE ENGINE MOUNTING INSULATOR

(a) Attach the engine chain hoist to the engine hangers.
CAUTION:
Do not attempt to hang the engine by hooking the chain to any other part.

(b) Remove the bolt and disconnect the engine mounting insulator FR.

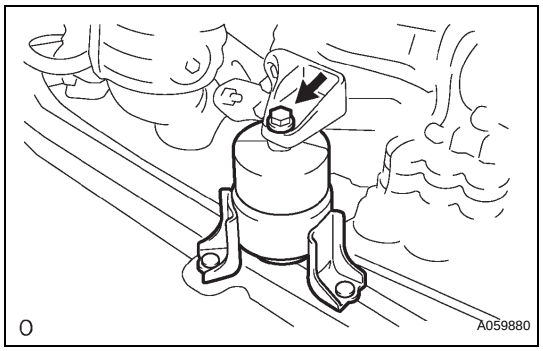

(c) M/T:
Remove the bolt and disconnect the engine lateral control rod.

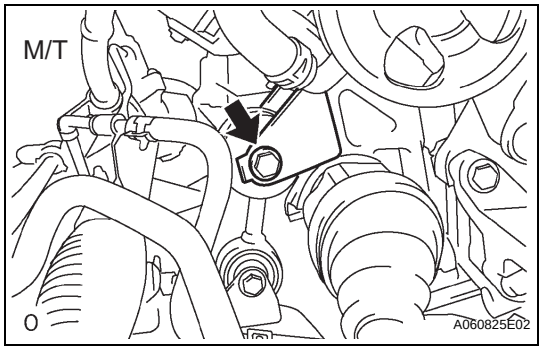

(d) Remove the 2 bolts and disconnect the steering gear return tube clamps from the frame.

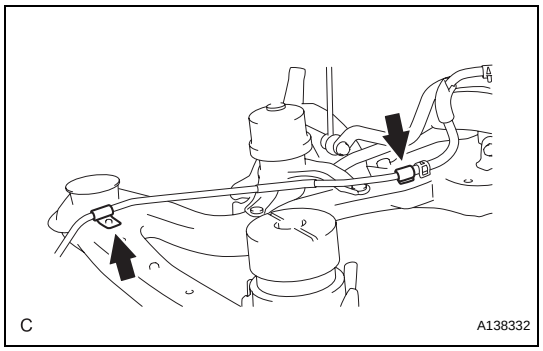

EM

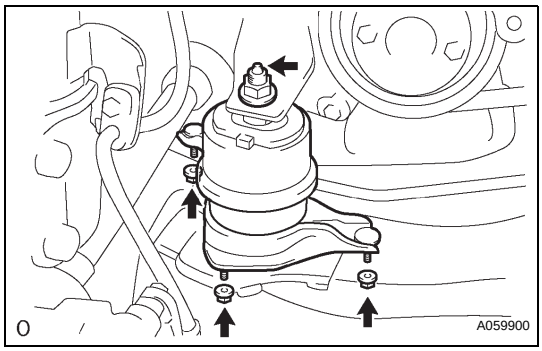

(e) Remove the 4 nuts from the engine mounting insulator RH.
(f) Raise the engine and remove the engine mounting insulator RH.

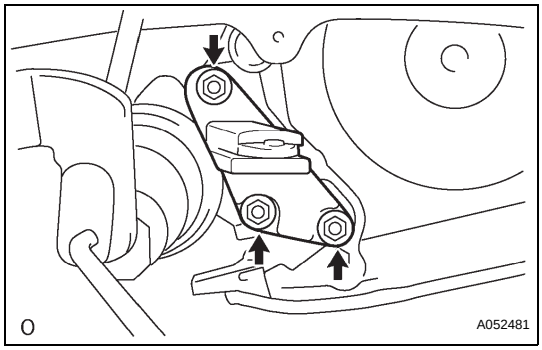

27. REMOVE ENGINE MOUNTING BRACKET RH
(a) Remove the 3 bolts and engine mounting bracket.

28. REMOVE TIMING CHAIN COVER SUB-ASSEMBLY (See page LU-11)

29. REMOVE TIMING CHAIN CASE OIL SEAL (See page LU-12)

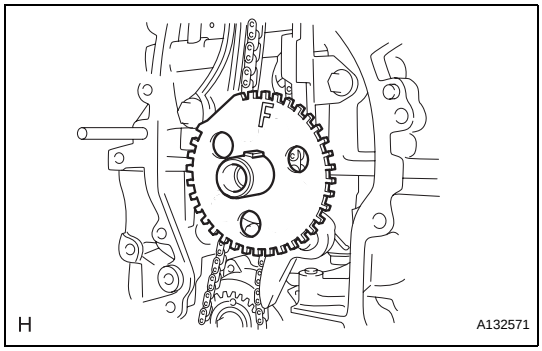

30. REMOVE NO. 1 CRANKSHAFT POSITION SENSOR PLATE
(a) Remove the crankshaft position sensor plate.

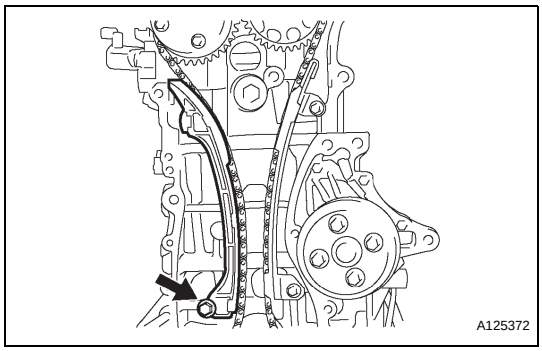

31. REMOVE CHAIN TENSIONER SLIPPER
(a) Remove the bolt and chain tensioner slipper.

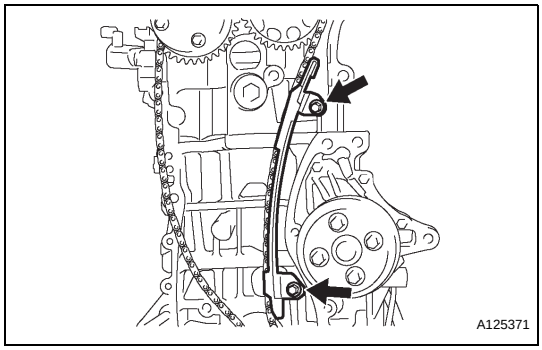

32. REMOVE NO. 1 CHAIN VIBRATION DAMPER
(a) Remove the 2 bolts and chain vibration damper.

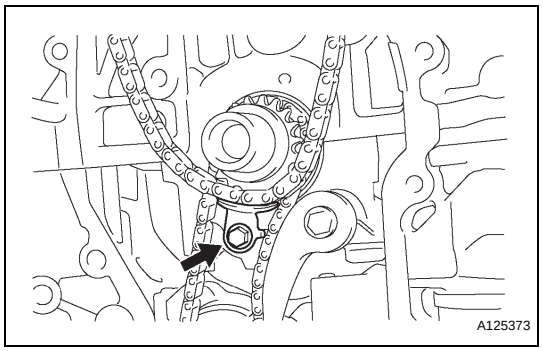

33. REMOVE TIMING CHAIN GUIDE

(a) Remove the bolt and timing chain guide.

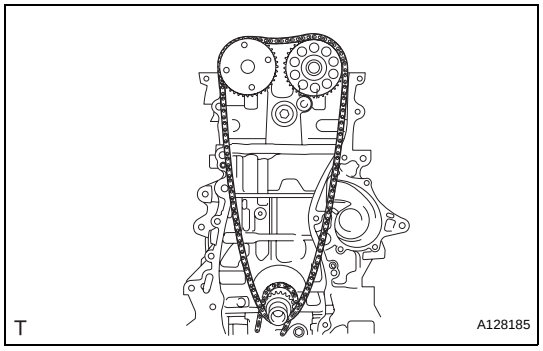

34. REMOVE CHAIN SUB-ASSEMBLY

(a) Remove the chain sub-assembly.

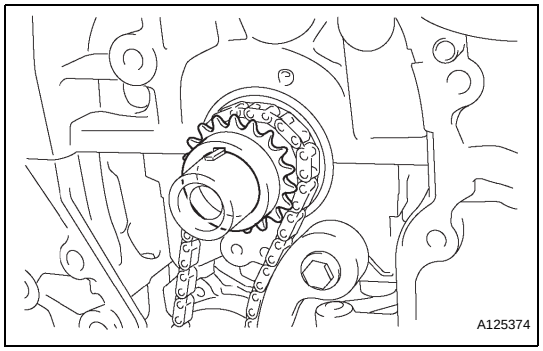

35. REMOVE CRANKSHAFT TIMING SPROCKET

(a) Remove the crankshaft timing sprocket.

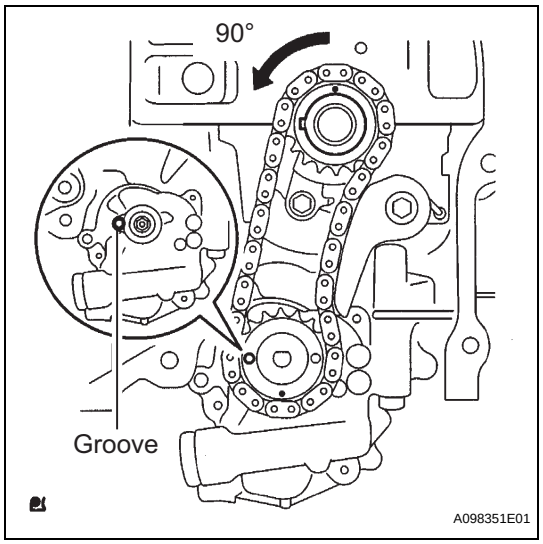

36. REMOVE NO. 2 CHAIN SUB-ASSEMBLY

(a) Turn the crankshaft by 90° counterclockwise to align the adjusting hole of the oil pump drive shaft sprocket with the groove of the oil pump.

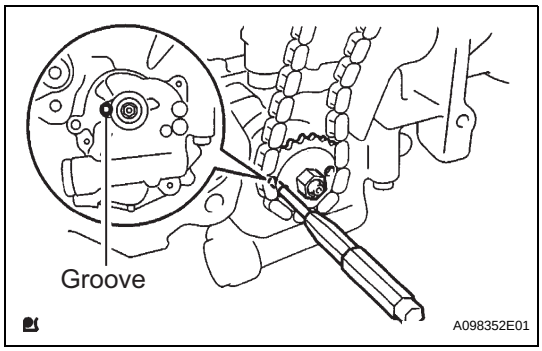

(b) Insert a 4 mm diameter bar into the adjusting hole of the oil pump drive shaft sprocket to lock the gear in position, and then remove the nut.

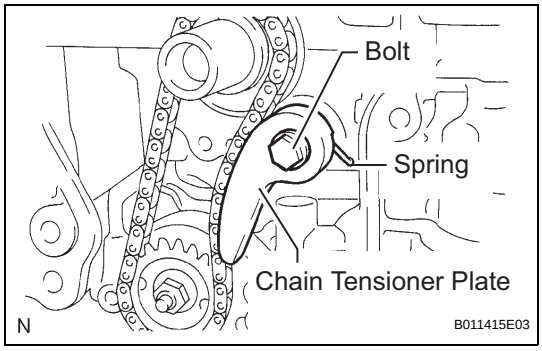

(c) Remove the bolt, chain tensioner plate and spring.

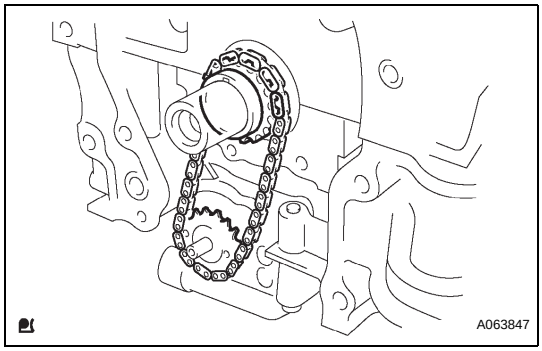

(d) Remove the chain tensioner, oil pump driven sprocket and chain.

EM

INSPECTION

1. **INSPECT CHAIN SUB-ASSEMBLY (See page EM-138)**
2. **INSPECT NO. 2 CHAIN SUB-ASSEMBLY (See page EM-138)**
3. **INSPECT OIL PUMP DRIVE SPROCKET (See page EM-138)**
4. **INSPECT OIL PUMP DRIVE SHAFT SPROCKET (See page EM-139)**
5. **INSPECT CHAIN TENSIONER SLIPPER (See page EM-140)**
6. **INSPECT NO. 1 CHAIN VIBRATION DAMPER (See page EM-140)**
7. **INSPECT CHAIN TENSIONER PLATE (See page EM-140)**
8. **INSPECT NO. 1 CHAIN TENSIONER (See page EM-140)**

INSTALLATION

1. **INSTALL NO. 2 CHAIN SUB-ASSEMBLY**
   (a) Set the crankshaft key into the left horizontal position.
   (b) Turn the drive shaft so that the cutout faces upward.

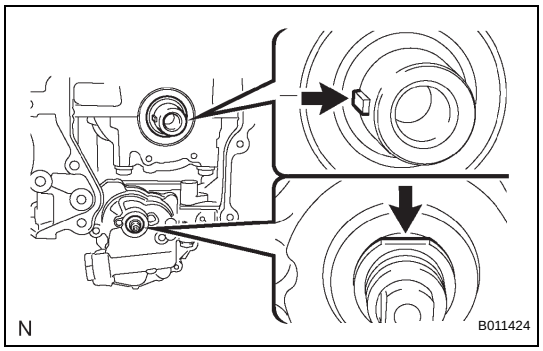

   (c) Align the yellow mark links with the timing marks of each gear as shown in the illustration.
   (d) Install the sprockets onto the crankshaft and oil pump shaft with the chain wrapped on the gears.
   (e) Temporarily tighten the oil pump drive shaft sprocket with the nut.

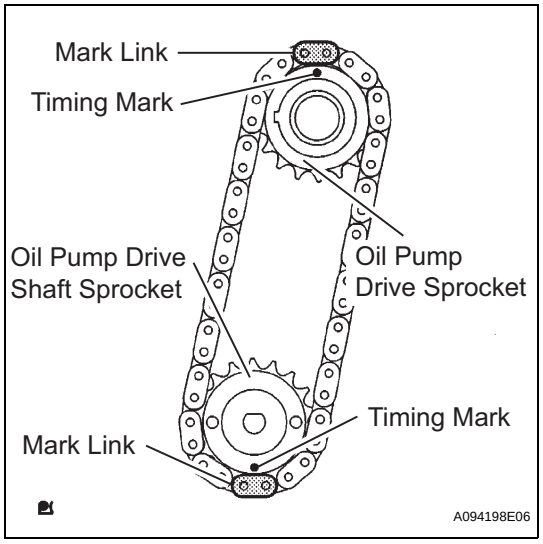

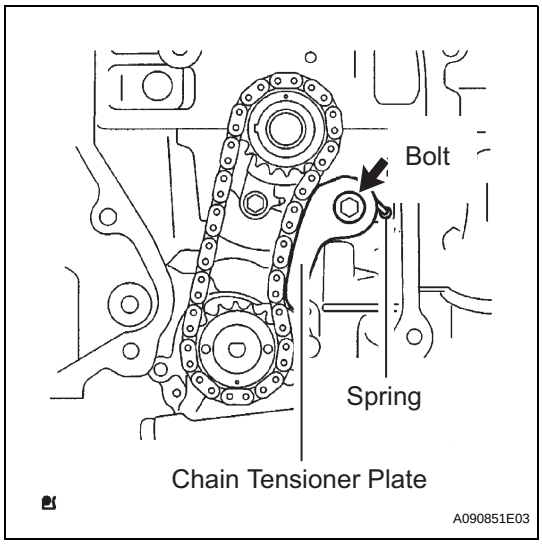

(f) Insert the damper spring into the adjusting hole, and then install the chain tensioner plate with the bolt.
Torque: 12 N*m (122 kgf*cm, 9 ft.*lbf)

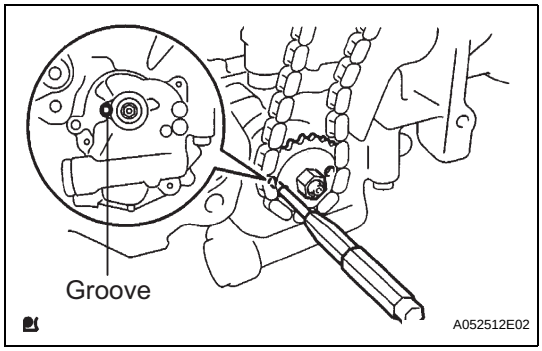

(g) Align the adjusting hole of the oil pump drive shaft sprocket with the groove of the oil pump.
(h) Insert a 4 mm diameter bar into the adjusting hole of the oil pump drive shaft gear to lock the gear in position, and then tighten the nut.
Torque: 30 N*m (301 kgf*cm, 22 ft.*lbf)

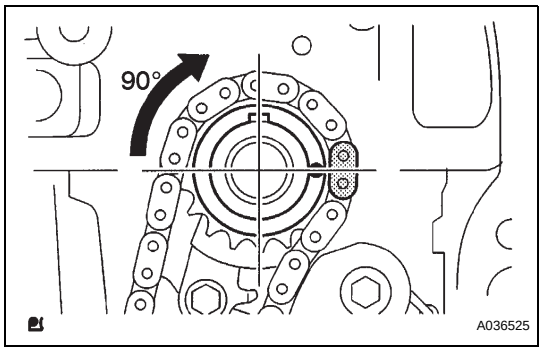

(i) Rotate the crankshaft clockwise by 90°, and align the crankshaft key to the top.

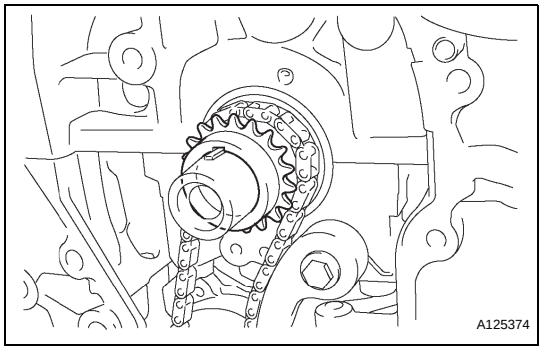

2. INSTALL CRANKSHAFT TIMING SPROCKET
(a) Install the crankshaft timing sprocket.

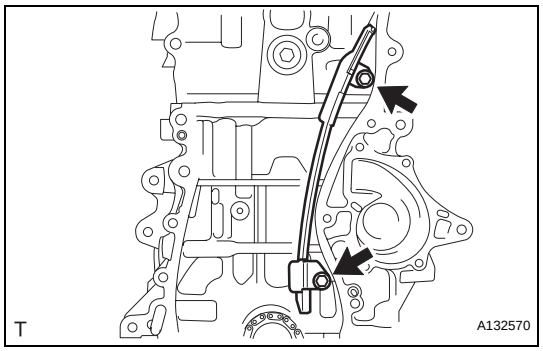

3. INSTALL NO. 1 CHAIN VIBRATION DAMPER

(a) Install the chain vibration damper with the 2 bolts.
Torque: 9.0 N*m (92 kgf*cm, 80 in.*lbf)

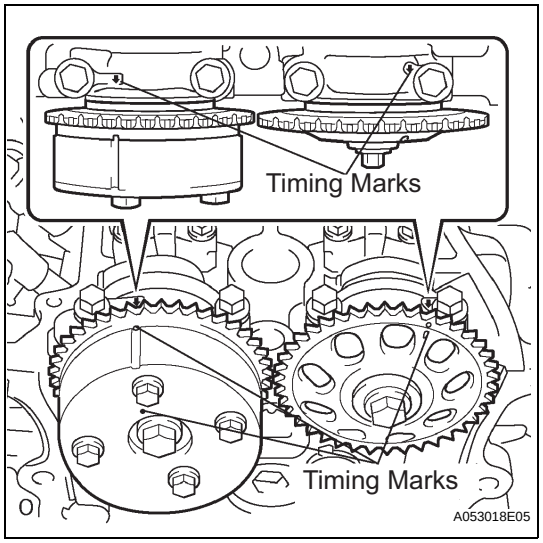

4. INSTALL CHAIN SUB-ASSEMBLY

(a) Set the No. 1 cylinder to TDC/compression.

(1) Turn the camshafts with a wrench (using the hexagonal lobe) to align the timing marks of the camshaft timing gear with each timing mark located on the No. 1 and No. 2 bearing caps as shown in the illustration.

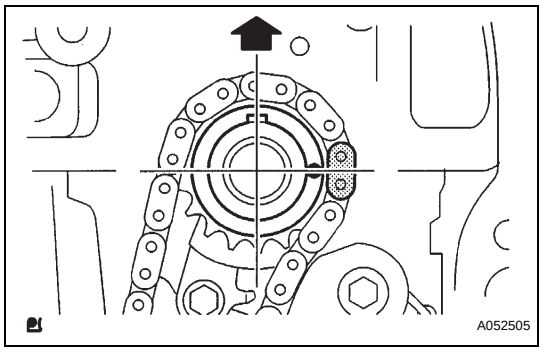

(2) Using the crankshaft pulley bolt, turn the crankshaft to position with the key on the crankshaft upward.

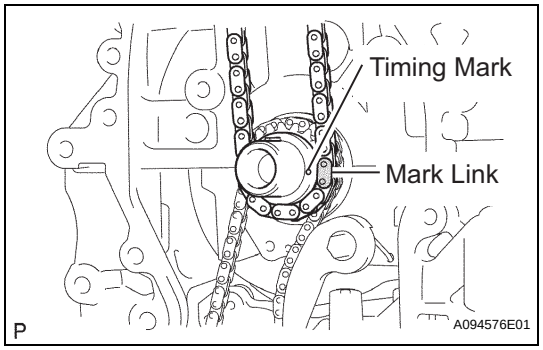

(b) Install the chain onto the crankshaft timing sprocket with the gold or pink mark link aligned with the timing mark on the crankshaft.

EM

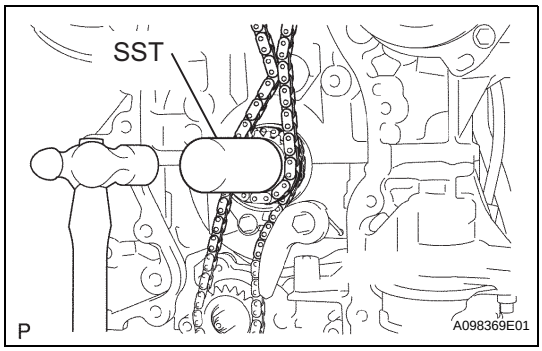

(c) Using SST and a hammer, tap in the crankshaft timing sprocket.
SST 09309-37010

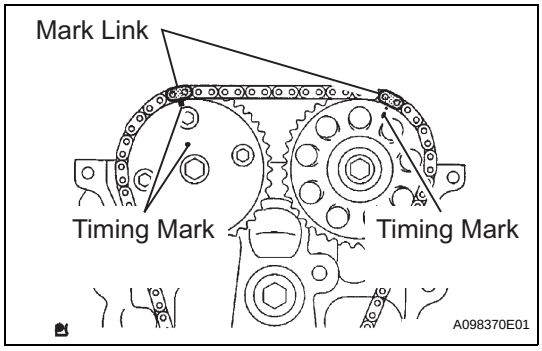

(d) Align the gold or yellow link with each timing mark located on the camshaft timing gear and sprocket, then install the chain.

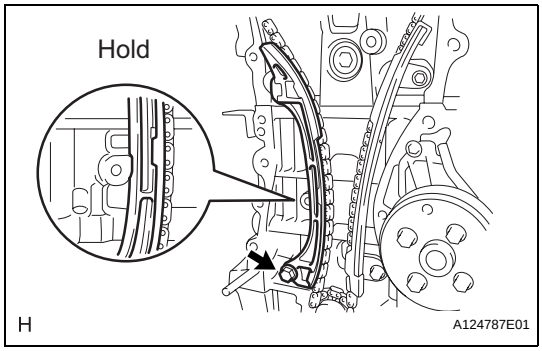

5. INSTALL CHAIN TENSIONER SLIPPER

(a) Install the chain tensioner slipper with the bolt.
Torque: 19 N*m (194 kgf*cm, 14 ft.*lbf)

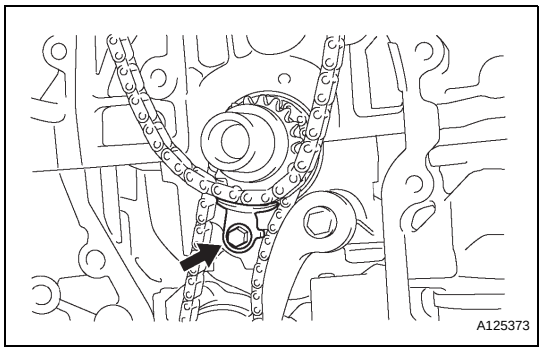

6. INSTALL TIMING CHAIN GUIDE

(a) Install the timing chain guide with the bolt.
Torque: 9.0 N*m (92 kgf*cm, 80 in.*lbf)

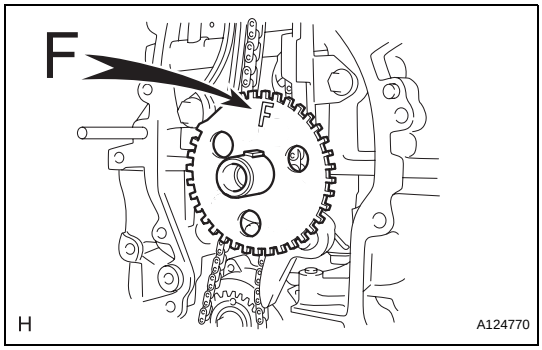

7. INSTALL NO. 1 CRANKSHAFT POSITION SENSOR PLATE

(a) Install the sensor plate with the "F" mark facing forward.

8. INSTALL TIMING CHAIN CASE OIL SEAL (See page LU-15)

9. INSTALL TIMING CHAIN COVER SUB-ASSEMBLY (See page LU-15)

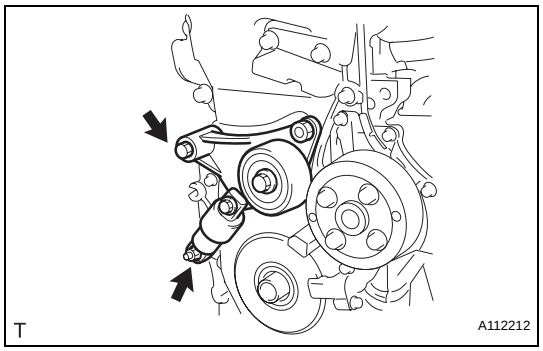

10. INSTALL V-RIBBED BELT TENSIONER ASSEMBLY

(a) Install the V-ribbed belt tensioner with the bolt and nut.
Torque: 60 N*m (607 kgf*cm, 44 ft.*lbf)
NOTICE:
Do not lift the engine more than necessary.

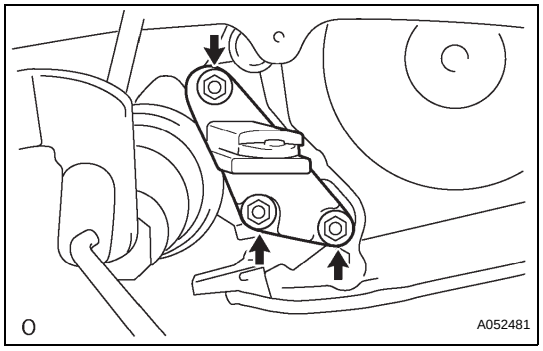

11. INSTALL ENGINE MOUNTING BRACKET RH

(a) Install the engine mounting bracket with the 3 bolts.
Torque: 54 N*m (551 kgf*cm, 40 ft.*lbf)

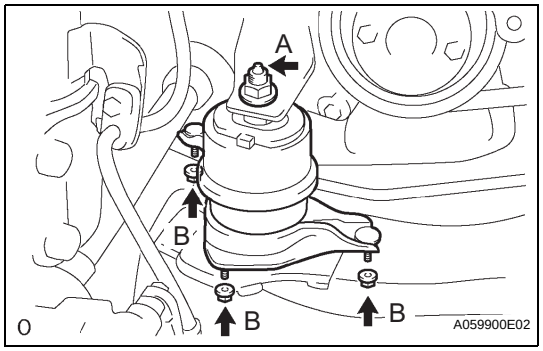

12. INSTALL ENGINE MOUNTING INSULATOR

(a) Raise the engine and install the engine mounting insulator RH.

(b) Install the engine mounting insulator RH with the 4 nuts.
Torque: Nut A
95 N*m (969 kgf*cm, 70 ft.*lbf)
Nut B
87 N*m (888 kgf*cm, 64 ft.*lbf)

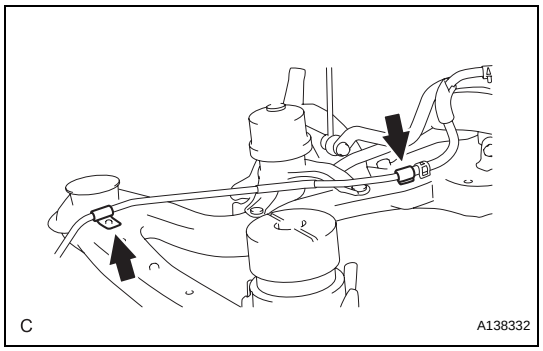

(c) Install the steering gear return tube clamps to the frame with the 2 bolts.
Torque: 8.0 N*m (80 kgf*cm, 69 in.*lbf)

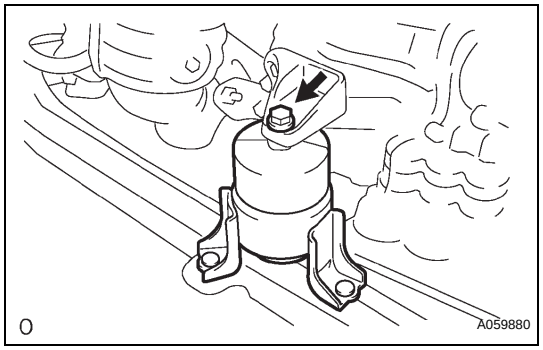

(d) Install the engine mounting insulator FR with the bolt.
Torque: 87 N*m (888 kgf*cm, 64 ft.*lbf)

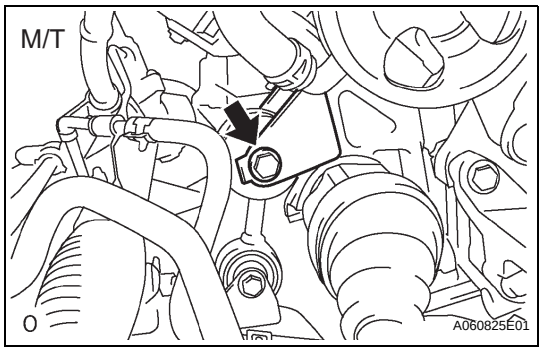

(e) M/T:
Install the engine lateral control rod with the bolt.
Torque: 89 N*m (910 kgf*cm, 66 ft.*lbf)

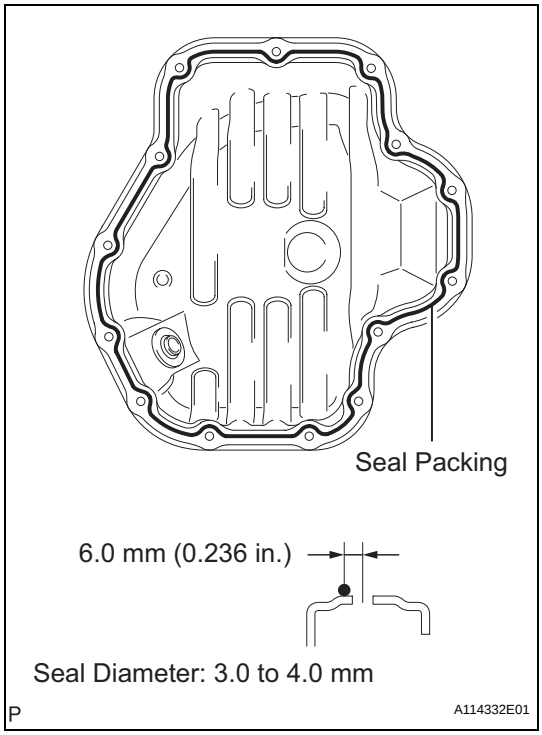

13. INSTALL OIL PAN SUB-ASSEMBLY

(a) Remove any old packing material and be careful not to drop any oil on the contact surfaces of the cylinder block and oil pan.

(b) Apply a continuous bead of seal packing (Diameter 3.0 to 4.0 mm (0.118 to 0.157 in.)) as shown in the illustration.
Seal packing:
Toyota Genuine Seal Packing Block, Three Bond 1207B or Equivalent
NOTICE:
- **Remove any oil from the contact surfaces.**
- **Install the oil pan within 3 minutes after applying seal packing.**
- **Do not start the engine for at least 2 hours after installing.**

(c) Install the oil pan to the cylinder block.

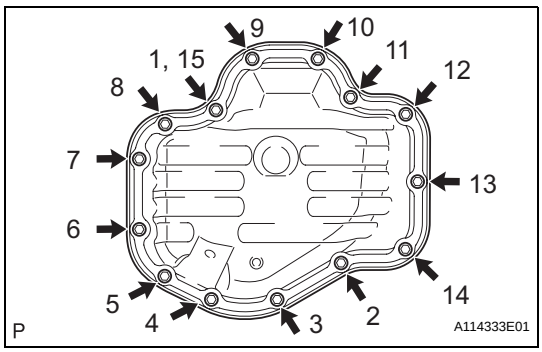

(d) Uniformly tighten the 12 bolts and 2 nuts in the sequence shown in the illustration.
Torque: 9.0 N*m (92 kgf*cm, 80 in.*lbf)

14. INSTALL CRANK POSITION SENSOR (See page ES-411)

15. INSTALL CRANKSHAFT PULLEY (See page EM-76)

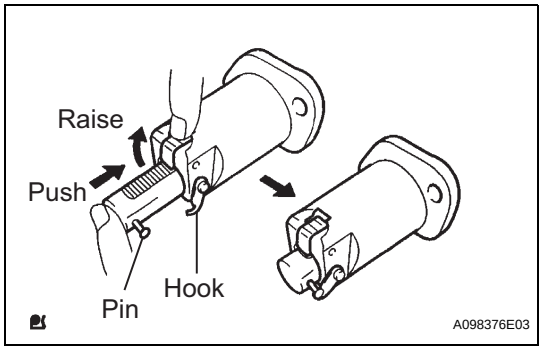

16. INSTALL NO. 1 CHAIN TENSIONER ASSEMBLY

(a) Release the ratchet pawl, then fully push in the plunger and hook the hook to the pin so that the plunger is in the position shown in the illustration.

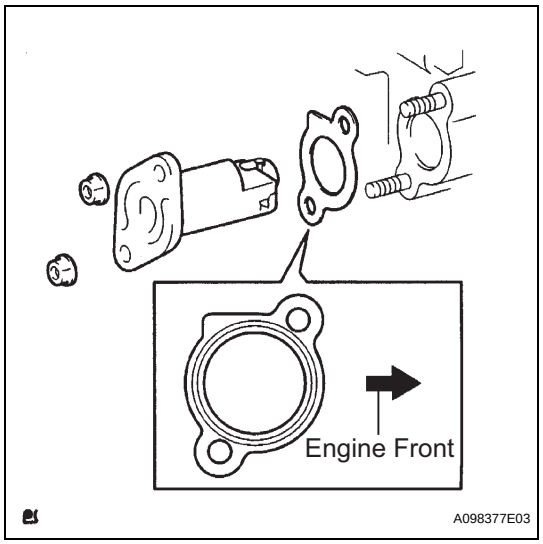

(b) Install a new gasket and the chain tensioner with the 2 nuts.
Torque: 9.0 N*m (92 kgf*cm, 80 in.*lbf)
NOTICE:
If the hook releases the plunger while the chain tensioner is being installed, set the hook again.

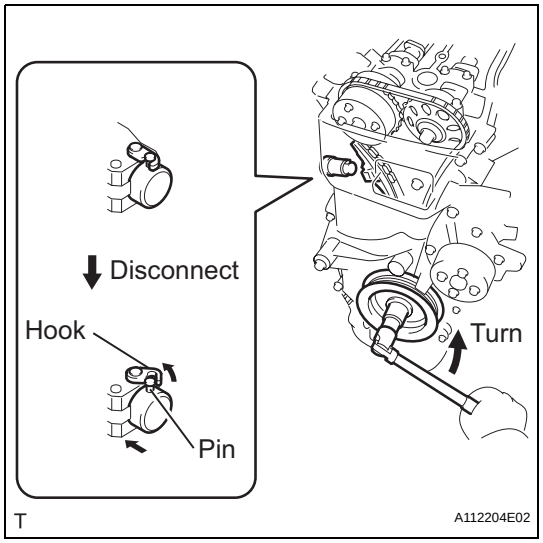

(c) Turn the crankshaft counterclockwise, then disconnect the plunger knock pin from the hook.

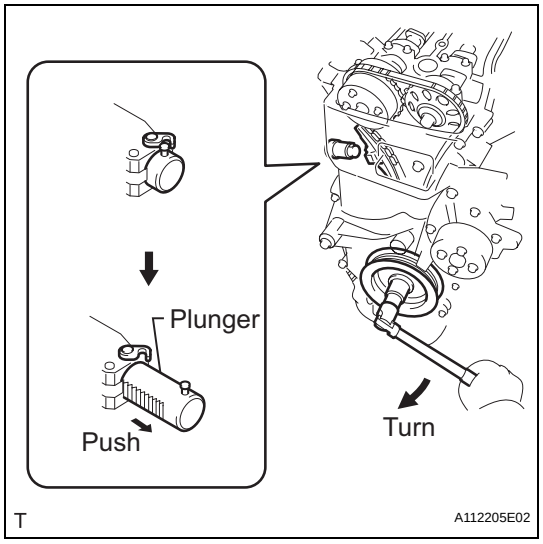

(d) Turn the crankshaft clockwise, then check that the plunger is extended.

17. INSTALL CYLINDER HEAD COVER SUB-ASSEMBLY

(a) Remove any old packing material from the contact surface.

EM

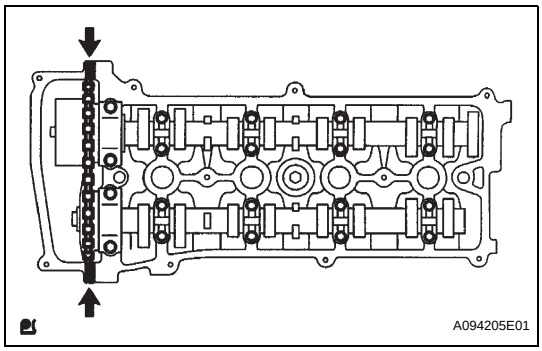

(b) Apply seal packing to the 2 locations shown in the illustration.
Seal packing:
Toyota Genuine Seal Packing Block, Three Bond 1207B or Equivalent
NOTICE:
- **Remove any oil from the contact surface.**
- **Install the cylinder head cover within 3 minutes of applying seal packing.**
- **Do not add engine oil for at least 2 hours after installing the cylinder head cover.**

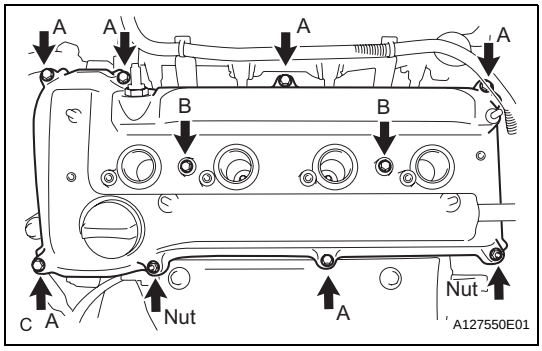

(c) Install the cylinder head cover with the 8 bolts and 2 nuts.
Torque: Bolt A
11 N*m (112 kgf*cm, 8 ft.*lbf)
Bolt B
14 N*m (143 kgf*cm, 10 ft.*lbf)
Nut
11 N*m (112 kgf*cm, 8 ft.*lbf)

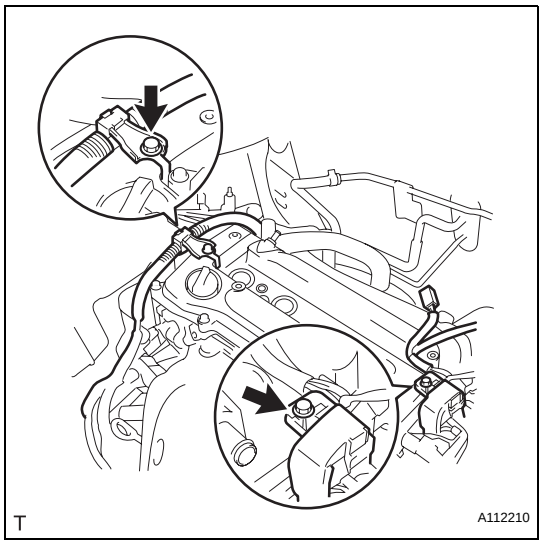

(d) Install the 2 engine wires with the 2 bolts.
Torque: 8.4 N*m (86 kgf*cm, 74 in.*lbf)

18. INSTALL NO. 2 VENTILATION HOSE

19. INSTALL VENTILATION HOSE

20. INSTALL IGNITION COIL ASSEMBLY
(a) Install the 4 ignition coils with the 4 bolts.
Torque: 9.0 N*m (92 kgf*cm, 80 in.*lbf)

21. INSTALL VANE PUMP ASSEMBLY (See page EM-113)

22. INSTALL GENERATOR ASSEMBLY (See page CH-19)

23. INSTALL V-RIBBED BELT (See page EM-6)

24. INSTALL NO. 2 ENGINE MOUNTING BRACKET RH (See page EM-118)

25. INSTALL ENGINE MOVING CONTROL ROD SUB-ASSEMBLY (See page EM-119)

26. INSTALL NO. 2 ENGINE MOUNTING STAY RH (See page EM-119)

27. INSTALL FRONT EXHAUST PIPE ASSEMBLY
HINT:
See page EX-3.

28. ADD ENGINE OIL

29. CONNECT CABLE TO NEGATIVE BATTERY TERMINAL (See page EM-120)

30. CHECK FOR ENGINE OIL LEAKS

31. CHECK FOR EXHAUST GAS LEAKS

32. CHECK IGNITION TIMING (See page EM-1)

33. **INSTALL FRONT FENDER APRON SEAL RH**
34. **INSTALL ENGINE UNDER COVER LH**
35. **INSTALL ENGINE UNDER COVER RH**
36. **INSTALL FRONT WHEEL RH**
37. **INSTALL NO. 1 ENGINE COVER SUB-ASSEMBLY (See page EM-121)**

CAMSHAFT

COMPONENTS

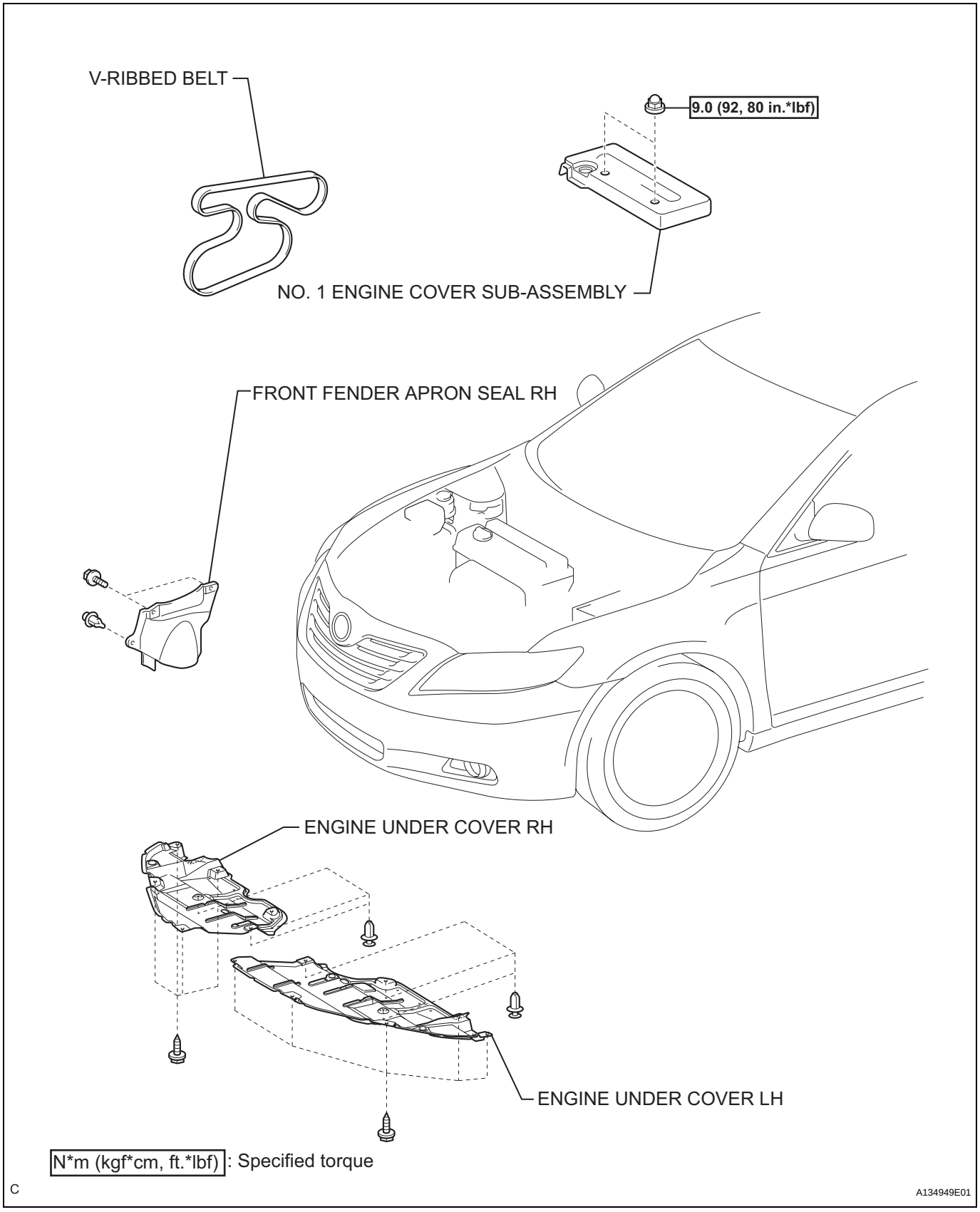

EM

EM

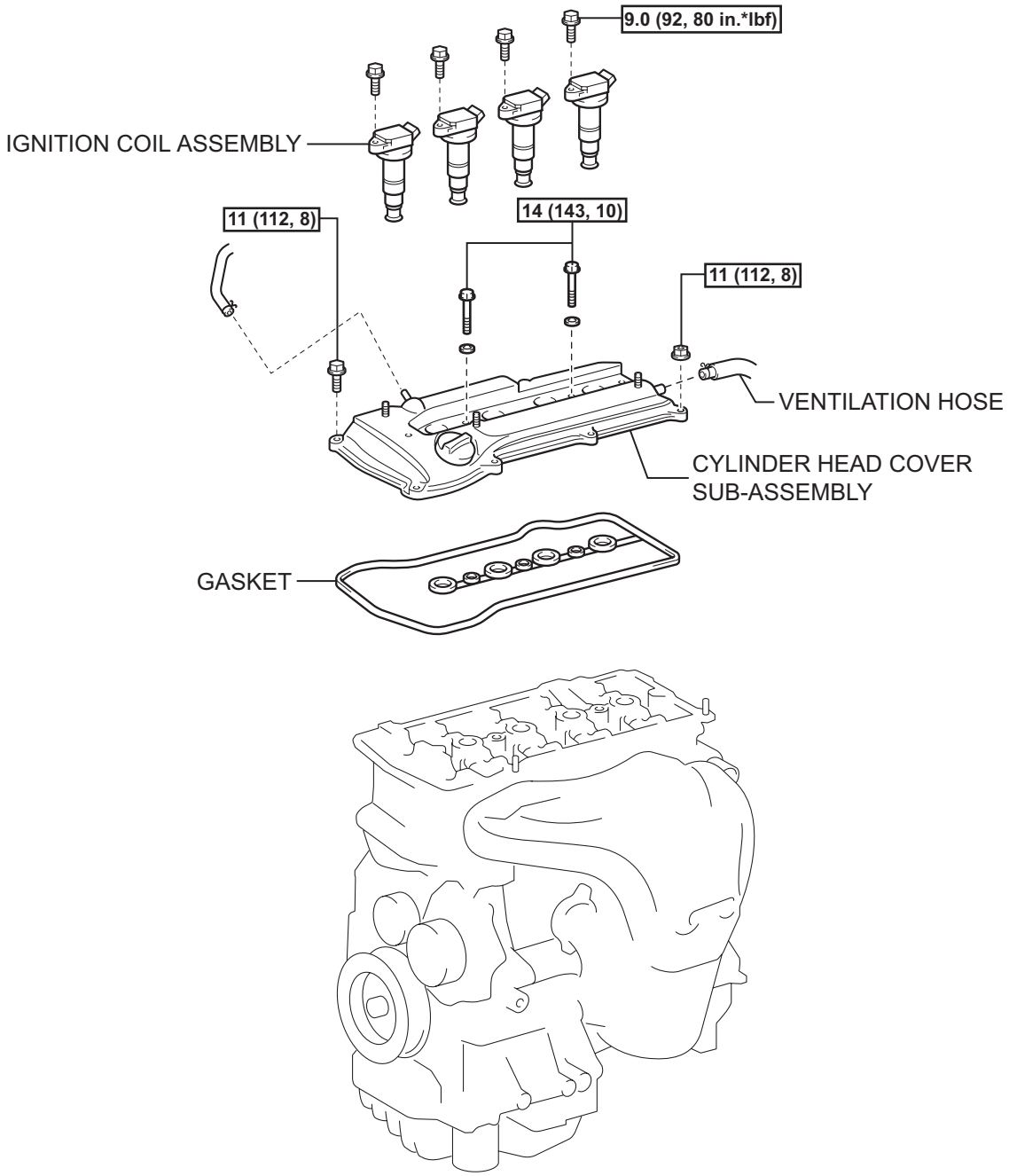

N*m (kgf*cm, ft.*lbf) : Specified torque

A134919E01

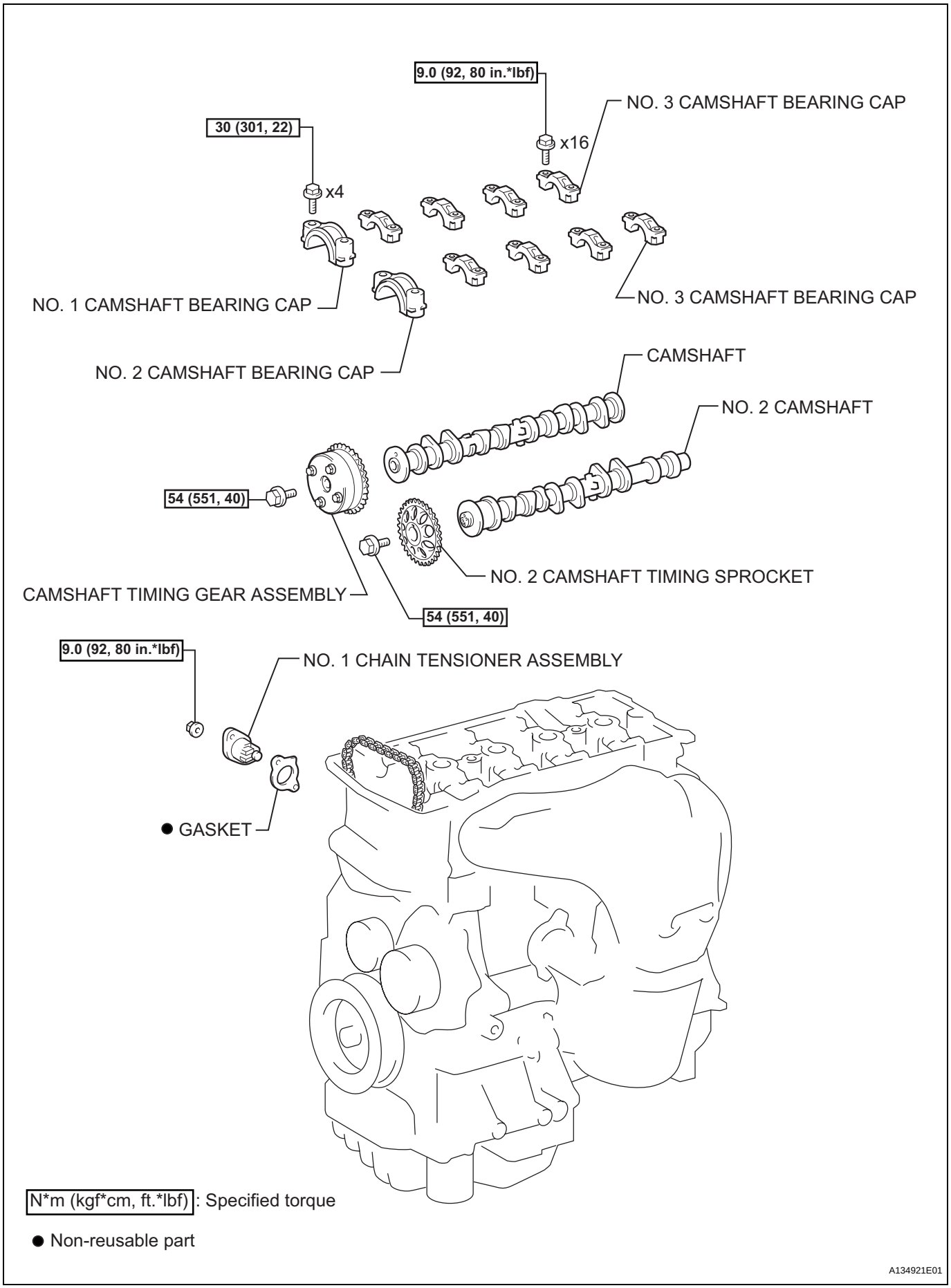
9.0 (92, 80 in.*lbf)
NO. 3 CAMSHAFT BEARING CAP
30 (301, 22)
x16
x4
NO. 1 CAMSHAFT BEARING CAP
NO. 3 CAMSHAFT BEARING CAP
NO. 2 CAMSHAFT BEARING CAP
CAMSHAFT
NO. 2 CAMSHAFT
54 (551, 40)
NO. 2 CAMSHAFT TIMING SPROCKET
CAMSHAFT TIMING GEAR ASSEMBLY
54 (551, 40)
9.0 (92, 80 in.*lbf)
NO. 1 CHAIN TENSIONER ASSEMBLY
● GASKET
N*m (kgf*cm, ft.*lbf): Specified torque
● Non-reusable part
A134921E01

EM

EM

REMOVAL

1. **REMOVE FRONT WHEEL RH**
2. **REMOVE ENGINE UNDER COVER LH**
3. **REMOVE ENGINE UNDER COVER RH**
4. **REMOVE FRONT FENDER APRON SEAL RH**
5. **REMOVE NO. 1 ENGINE COVER SUB-ASSEMBLY (See page EM-94)**
6. **REMOVE IGNITION COIL ASSEMBLY (See page EM-106)**
7. **REMOVE CYLINDER HEAD COVER SUB-ASSEMBLY (See page EM-21)**
8. **SET NO. 1 CYLINDER TO TDC/COMPRESSION (See page EM-8)**
9. **REMOVE NO. 1 CHAIN TENSIONER ASSEMBLY (See page EM-22)**
10. **REMOVE NO. 2 CAMSHAFT**
    (a) While holding the camshaft with a wrench, loosen the camshaft timing set bolt.

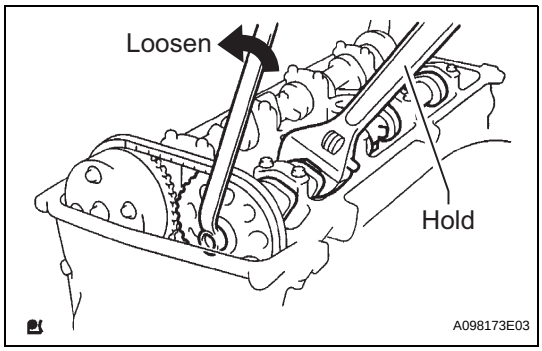

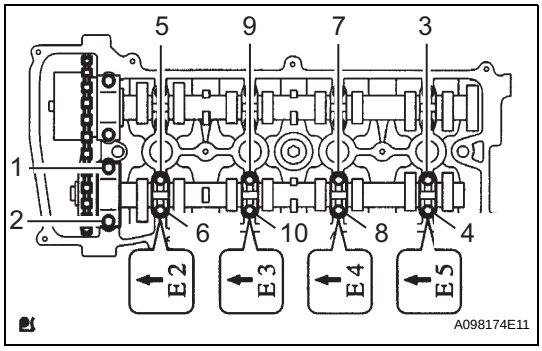

(b) Using several steps, uniformly loosen and remove the 10 bearing cap bolts in the sequence shown in the illustration.
(c) Remove the 5 bearing caps.

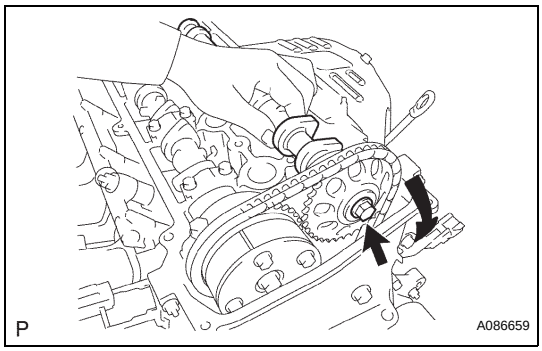

(d) While holding the No. 2 camshaft by hand, remove the camshaft timing sprocket set bolt.
(e) Remove the camshaft timing sprocket from the No. 2 camshaft with the timing chain wrapped on the sprocket.
(f) Remove the camshaft timing sprocket from the timing chain.

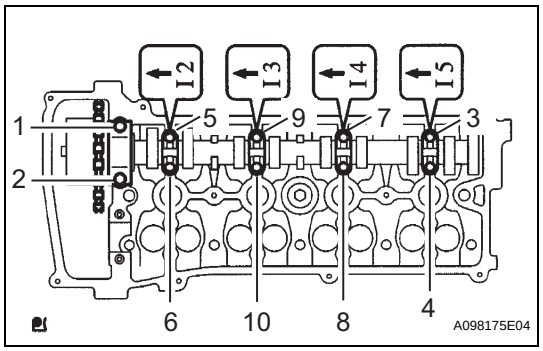

11. REMOVE CAMSHAFT

(a) Using several steps, uniformly loosen and remove the 10 bearing cap bolts in the sequence shown in the illustration.

(b) Remove the 5 bearing caps.

(c) Remove the camshaft and camshaft timing gear while holding the timing chain by hand.

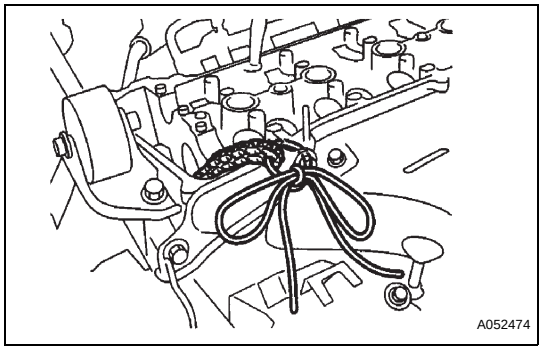

(d) Tie the timing chain with a string as shown in the illustration.

NOTICE:

Be careful not to drop anything inside the timing chain cover.

EM

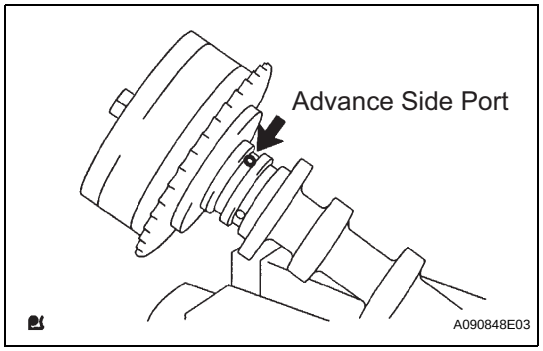

12. REMOVE CAMSHAFT TIMING GEAR ASSEMBLY

(a) Clamp the camshaft in a vise, and make sure that the camshaft timing gear does not rotate.

(b) Cover all the oil ports except the advance side port shown in the illustration with vinyl tape.

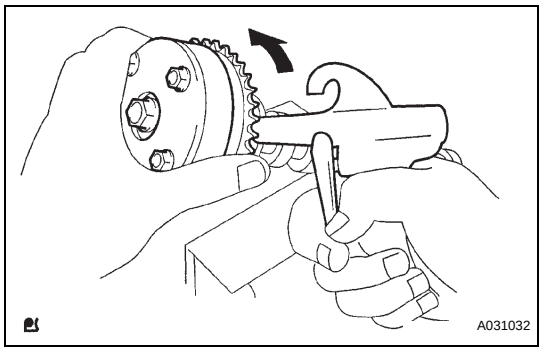

(c) Apply air pressure of 100 kPa (1.0 kgf/cm^2, 14 psi) to the oil path, then turn the camshaft timing gear in the advance direction (counterclockwise) by hand.

CAUTION:

Cover the paths with a shop rag or piece of cloth to avoid oil splashes.

HINT:

Depending on the air pressure, the camshaft timing gear will turn to the advance angle side without applying force by hand. Also, if the pressure is difficult to apply because of air leakage from the port, the lock may be difficult to release.

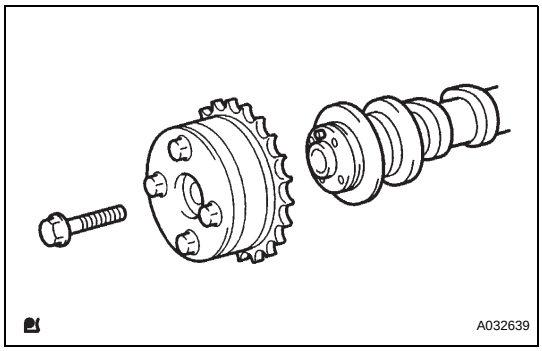

(d) Remove the flange bolt of the camshaft timing gear.
NOTICE:
- **Be sure not to remove the other 4 bolts.**
- **If planning to reuse the gear, be sure to release the straight pin lock before installing the gear.**

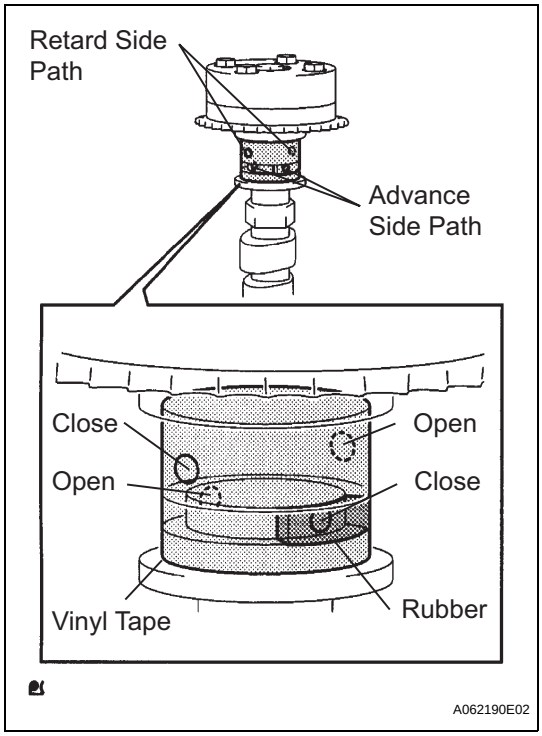

INSPECTION

1. INSPECT CAMSHAFT TIMING GEAR ASSEMBLY

(a) Check the lock of the camshaft timing gear.

(1) Clamp the camshaft in a vise, and confirm that the camshaft timing gear is locked.
NOTICE:
Be careful not to damage the camshaft.

(b) Release the lock pin.

(1) Cover the 4 oil paths of the cam journal with vinyl tape as shown in the illustration.
HINT:
The 2 advance side paths are provided in the groove of the camshaft. Plug one of the paths with a rubber piece.

(2) Break through the tape of the advance side path and the retard side path on the opposite side to the hole of the advance side path, as shown in the illustration.

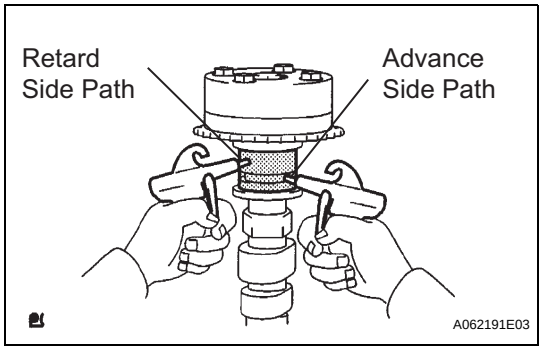

(3) Apply approximately 200 kPa (2.0 kgf/cm^2, 28 psi) of air pressure to the two broken paths.
CAUTION:
Cover the paths with a piece of cloth when applying pressure to keep oil from splashing.

(4) Check that the camshaft timing gear revolves in the advance direction when reducing the air pressure of the retard side path.
OK:
Gear rotates in the advance direction.
HINT:
This operation releases the lock pin for the most retarded position.

(5) When the camshaft timing gear reaches the most advanced position, remove the air gun from the retard side path and advance side path, in that order.

NOTICE:

Do not remove the air gun from the advance side path first. The gear may abruptly shift in the retard direction and break the lock pin.

(c) Check for smooth rotation.

(1) Rotate the camshaft timing gear within its movable range several times, but do not turn it to the most retarded position. Check that the gear rotates smoothly.

OK:

Gear rotates smoothly.

NOTICE:

Do not use an air gun to check for smooth operation.

(d) Check the lock in the most retarded position.

(1) Confirm that the camshaft timing gear is locked at the most retarded position.

2. INSPECT CAMSHAFT

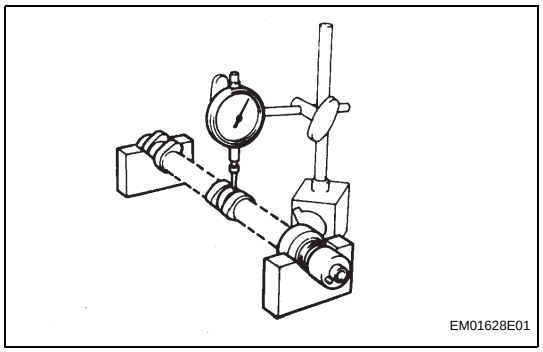

(a) Inspect the camshaft for runout.

(1) Place the camshaft on V-blocks.

(2) Using a dial indicator, measure the circle runout at the center journal.

Maximum circle runout:

0.03 mm (0.0012 in.)

If the circle runout is greater than the maximum, replace the camshaft.

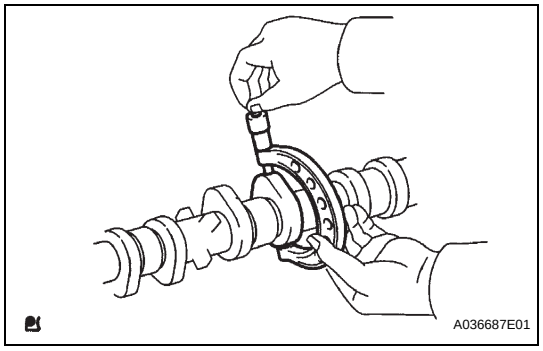

(b) Inspect the cam lobes.

(1) Using a micrometer, measure the cam lobe height.

Standard cam lobe height:

47.306 to 47.406 mm (1.8624 to 1.8664 in.)

Minimum cam lobe height:

47.196 mm (1.8581 in.)

If the cam lobe height is less than the minimum, replace the camshaft.

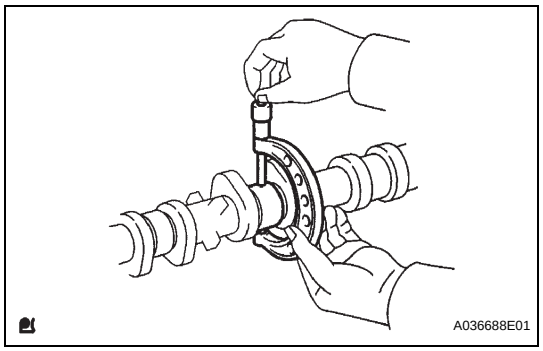

(c) Inspect the camshaft journals.

(1) Using a micrometer, measure the journal diameter.

Standard journal diameter

Journal Position	Specified Condition
No. 1	35.971 to 35.985 mm (1.4162 to 1.4167 in.)
Other	22.959 to 22.975 mm (0.9039 to 0.9045 in.)

If the journal diameter is not as specified, check the oil clearance.

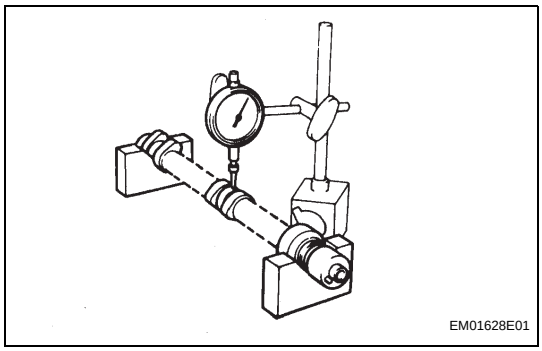

3. INSPECT NO. 2 CAMSHAFT

(a) Inspect the camshaft for runout.

(1) Place the camshaft on V-blocks.

(2) Using a dial indicator, measure the circle runout at the center journal.

Maximum circle runout:
0.03 mm (0.0012 in.)

If the circle runout is greater than the maximum, replace the No. 2 camshaft.

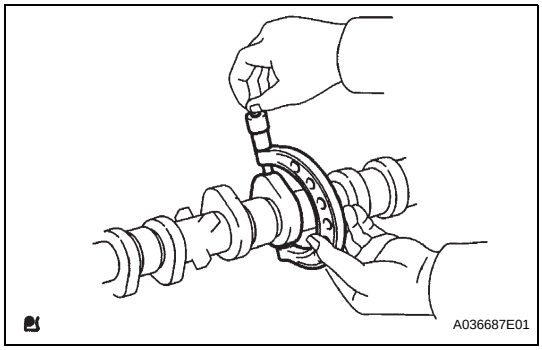

(b) Inspect the cam lobes.

(1) Using a micrometer, measure the cam lobe height.

Standard cam lobe height:
45.983 to 46.083 mm (1.8104 to 1.8143 in.)
Minimum cam lobe height:
45.873 mm (1.8060 in.)

If the cam lobe height is less than the minimum, replace the No. 2 camshaft.

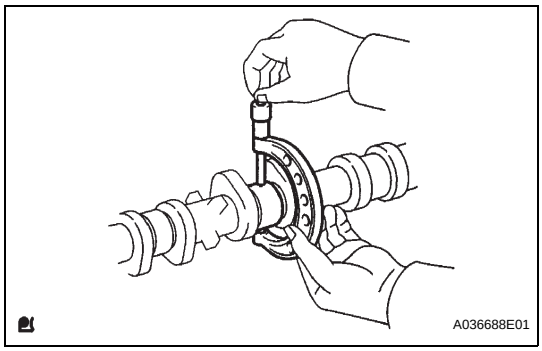

(c) Inspect the camshaft journals.

(1) Using a micrometer, measure the journal diameter.

Standard journal diameter

Journal Position	Specified Condition
No. 1	35.971 to 35.985 mm (1.4162 to 1.4167 in.)
Other	22.959 to 22.975 mm (0.9039 to 0.9045 in.)

If the journal diameter is not as specified, check the oil clearance.

INSTALLATION

1. INSTALL CAMSHAFT TIMING GEAR ASSEMBLY

(a) Put the camshaft timing gear and camshaft together with the straight pin and key groove misaligned, as shown in the illustration.

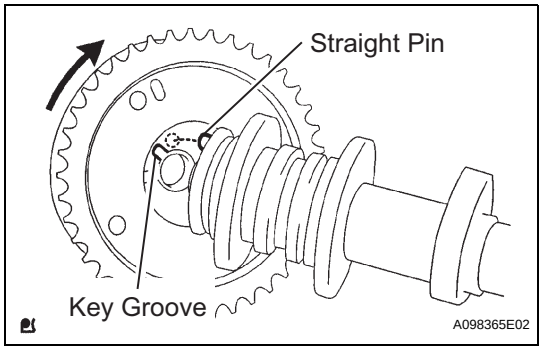

(b) Turn the camshaft timing gear as shown in the illustration while pushing it gently against the camshaft. Push further at the position where the pin fits into the groove.

NOTICE:
Be sure not to turn the camshaft timing gear to the retard angle side (the right angle).

(c) Check that there is no clearance between the gear and camshaft.

(d) Tighten the flange bolt with the camshaft timing gear fixed in place.

Torque: 54 N*m (551 kgf*cm, 40 ft.*lbf)

(e) Check that the camshaft timing gear can move to the retard angle side (the right direction) and is locked in the most retarded position.

2. INSTALL CAMSHAFT

(a) Apply a light coat of engine oil to the journal portion of the camshaft.

(b) Install the timing chain onto the camshaft timing gear with the paint mark aligned with the timing mark in the camshaft timing gear as shown in the illustration.

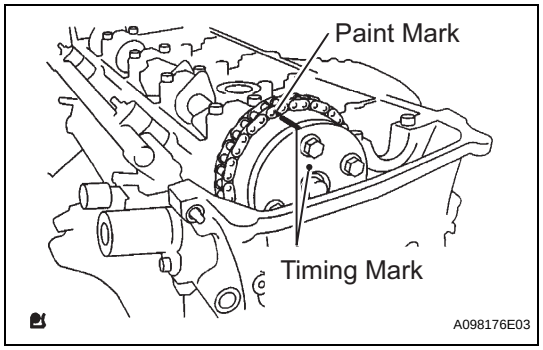

(c) Examine the front marks and numbers, and check that the order is as shown in the illustration. Then install the bearing caps into the cylinder head.

(d) Apply a light coat of engine oil to the threads and under the heads of the bearing cap bolts.

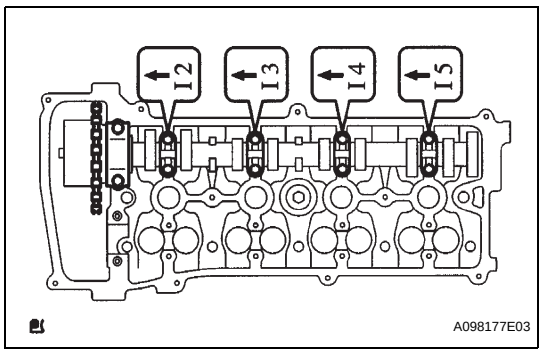

(e) Using several steps, uniformly tighten the 10 bearing cap bolts in the sequence shown in the illustration.

Torque: No. 1 Bearing cap
30 N*m (301 kgf*cm, 22 ft.*lbf)
No. 3 Bearing cap
9.0 N*m (92 kgf*cm, 80 in.*lbf)

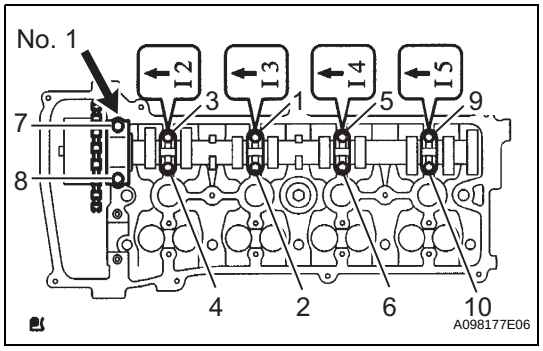

3. INSTALL NO. 2 CAMSHAFT

(a) Apply a light coat of engine oil to the journal portion of the No. 2 camshaft.

(b) Put the No. 2 camshaft on the cylinder head with the paint mark of the chain aligned with the timing mark on the camshaft timing sprocket.

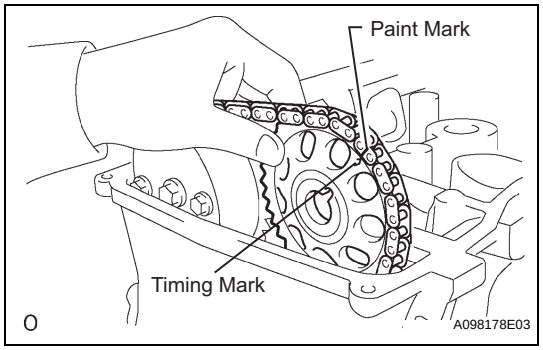

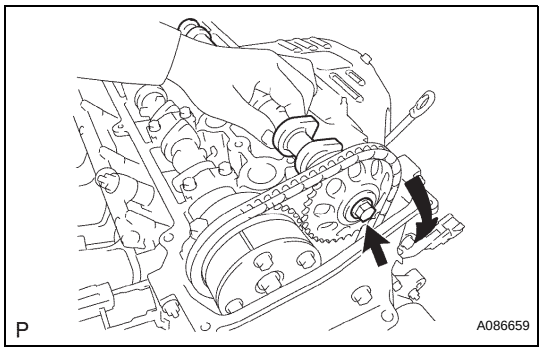

(c) While holding the No. 2 camshaft by hand, temporarily tighten the camshaft timing sprocket set bolt.

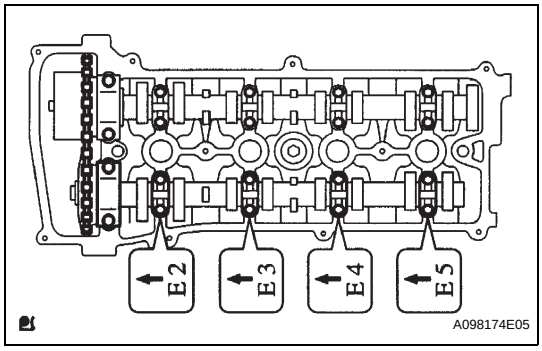

(d) Examine the front marks and numbers, and check that the order is as shown in the illustration. Then install the bearing caps onto the cylinder head.

(e) Apply a light coat of engine oil to the threads and under the heads of the bearing cap bolts.

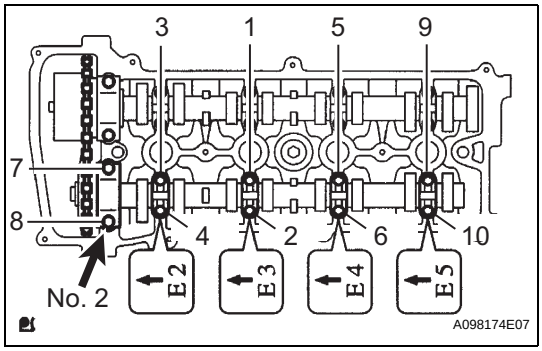

(f) Using several steps, uniformly tighten the 10 bearing cap bolts in the sequence shown in the illustration.

Torque: No. 2 Bearing cap
30 N*m (301 kgf*cm, 22 ft.*lbf)
No. 3 Bearing cap
9.0 N*m (92 kgf*cm, 80 in.*lbf)

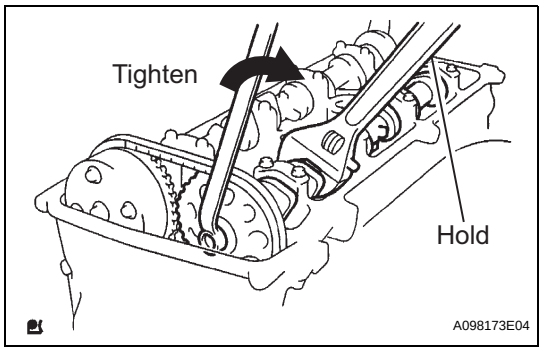

(g) While holding the camshaft with a wrench, tighten the camshaft timing sprocket set bolt.

Torque: 54 N*m (551 kgf*cm, 40 ft.*lbf)

EM

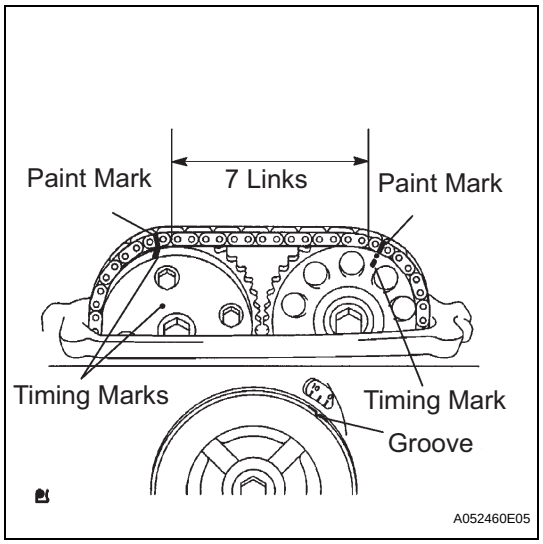

(h) Check that the paint marks on the chain are aligned with the timing marks on the camshaft timing gear and camshaft timing sprocket. Also, check that the crankshaft pulley groove is aligned with the timing mark "0" of the timing chain cover.

4. **INSTALL NO. 1 CHAIN TENSIONER ASSEMBLY (See page EM-32)**
5. **CHECK VALVE CLEARANCE (See page EM-8)**
6. **INSTALL CYLINDER HEAD COVER SUB-ASSEMBLY (See page EM-33)**
7. **INSTALL IGNITION COIL ASSEMBLY (See page EM-33)**
8. **INSTALL NO. 1 ENGINE COVER SUB-ASSEMBLY (See page EM-121)**
9. **INSTALL FRONT FENDER APRON SEAL RH**
10. **INSTALL ENGINE UNDER COVER LH**
11. **INSTALL ENGINE UNDER COVER RH**
12. **INSTALL FRONT WHEEL RH**
13. **CHECK FOR ENGINE OIL LEAKS**

CYLINDER HEAD

COMPONENTS

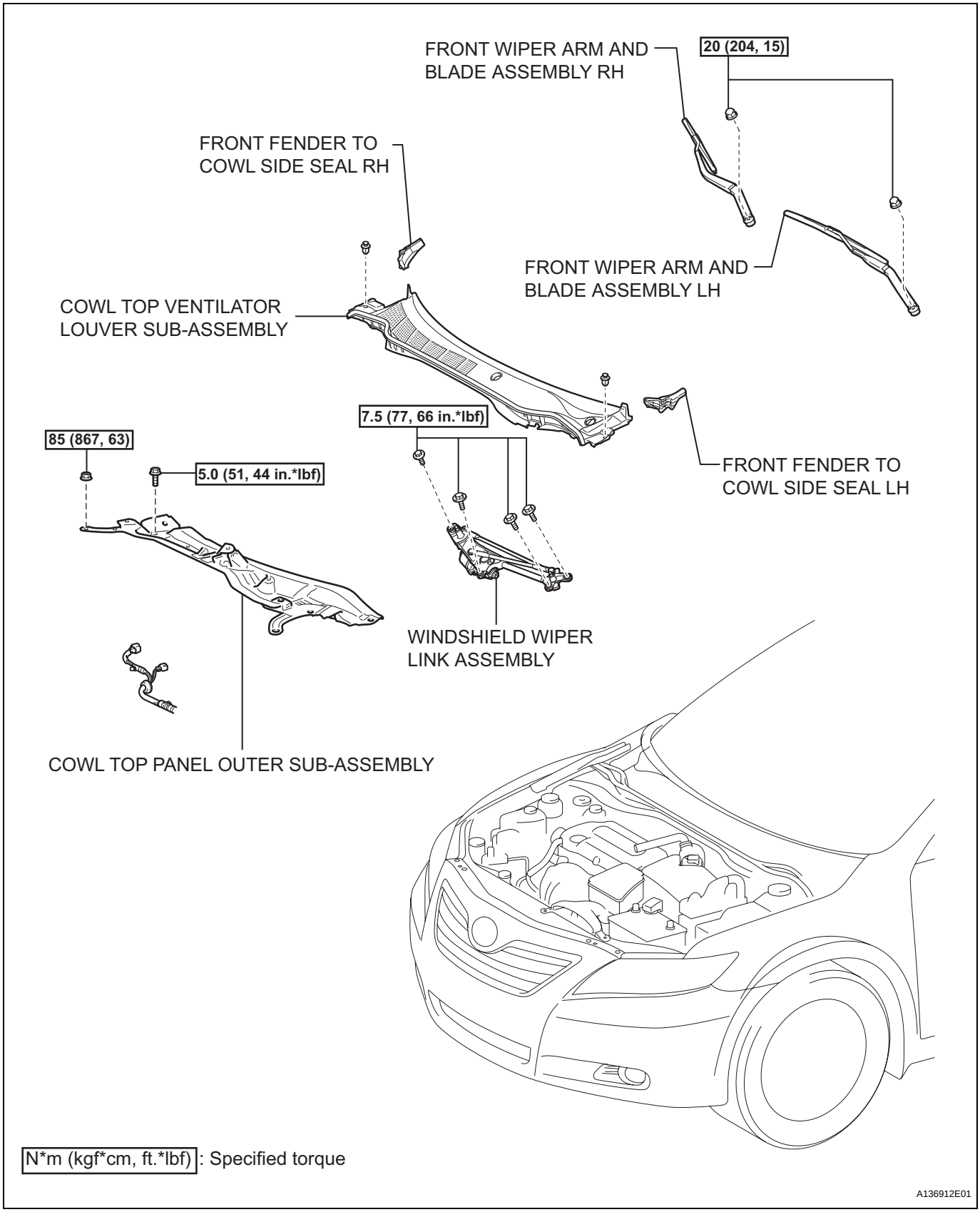

EM

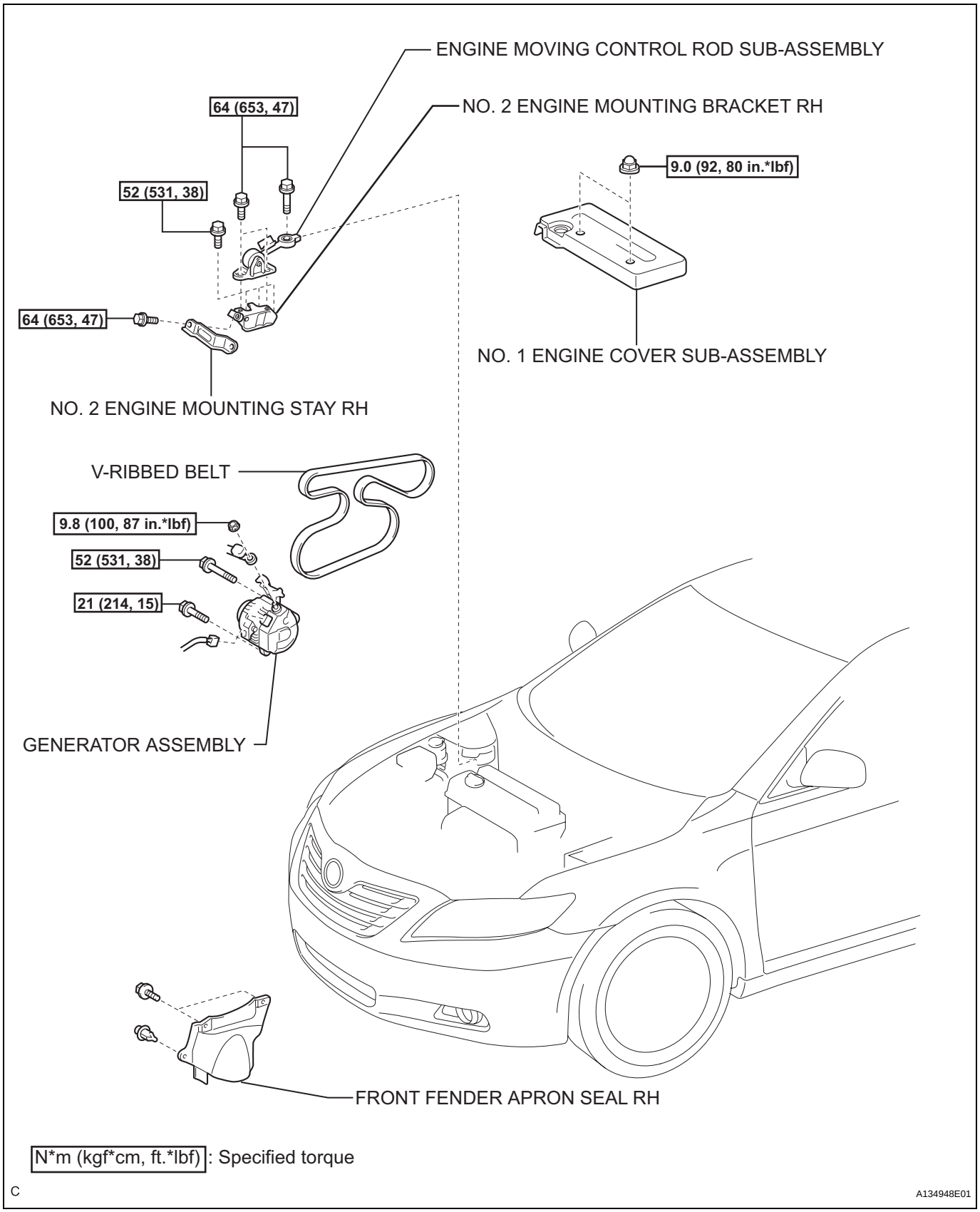
ENGINE MOVING CONTROL ROD SUB-ASSEMBLY
NO. 2 ENGINE MOUNTING BRACKET RH
64 (653, 47)
52 (531, 38)
9.0 (92, 80 in.*lbf)
64 (653, 47)
NO. 1 ENGINE COVER SUB-ASSEMBLY
NO. 2 ENGINE MOUNTING STAY RH
V-RIBBED BELT
9.8 (100, 87 in.*lbf)
52 (531, 38)
21 (214, 15)
GENERATOR ASSEMBLY
FRONT FENDER APRON SEAL RH
N*m (kgf*cm, ft.*lbf): Specified torque
C
A134948E01

EM

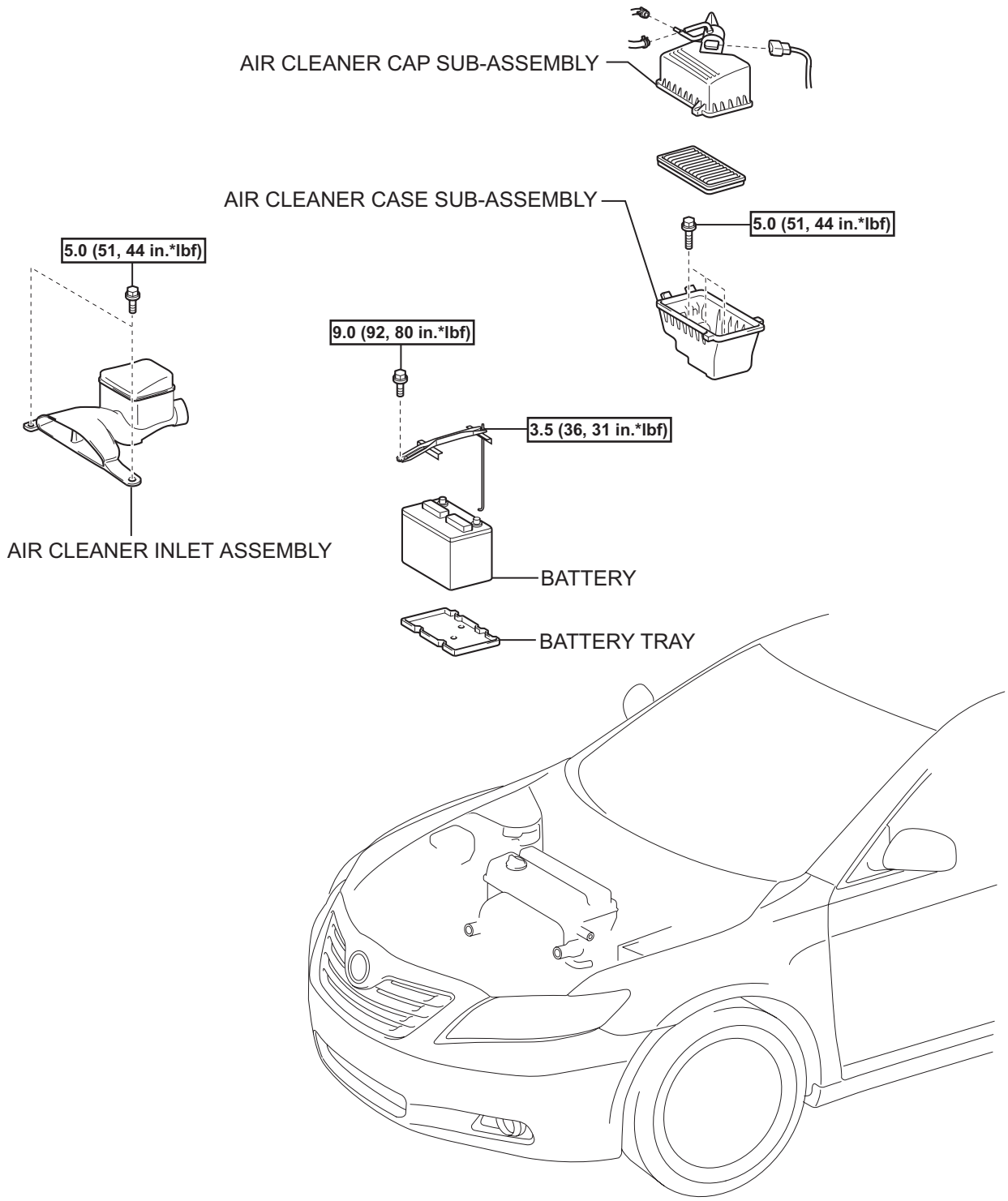

N*m (kgf*cm, ft.*lbf): Specified torque

C

A134950E01

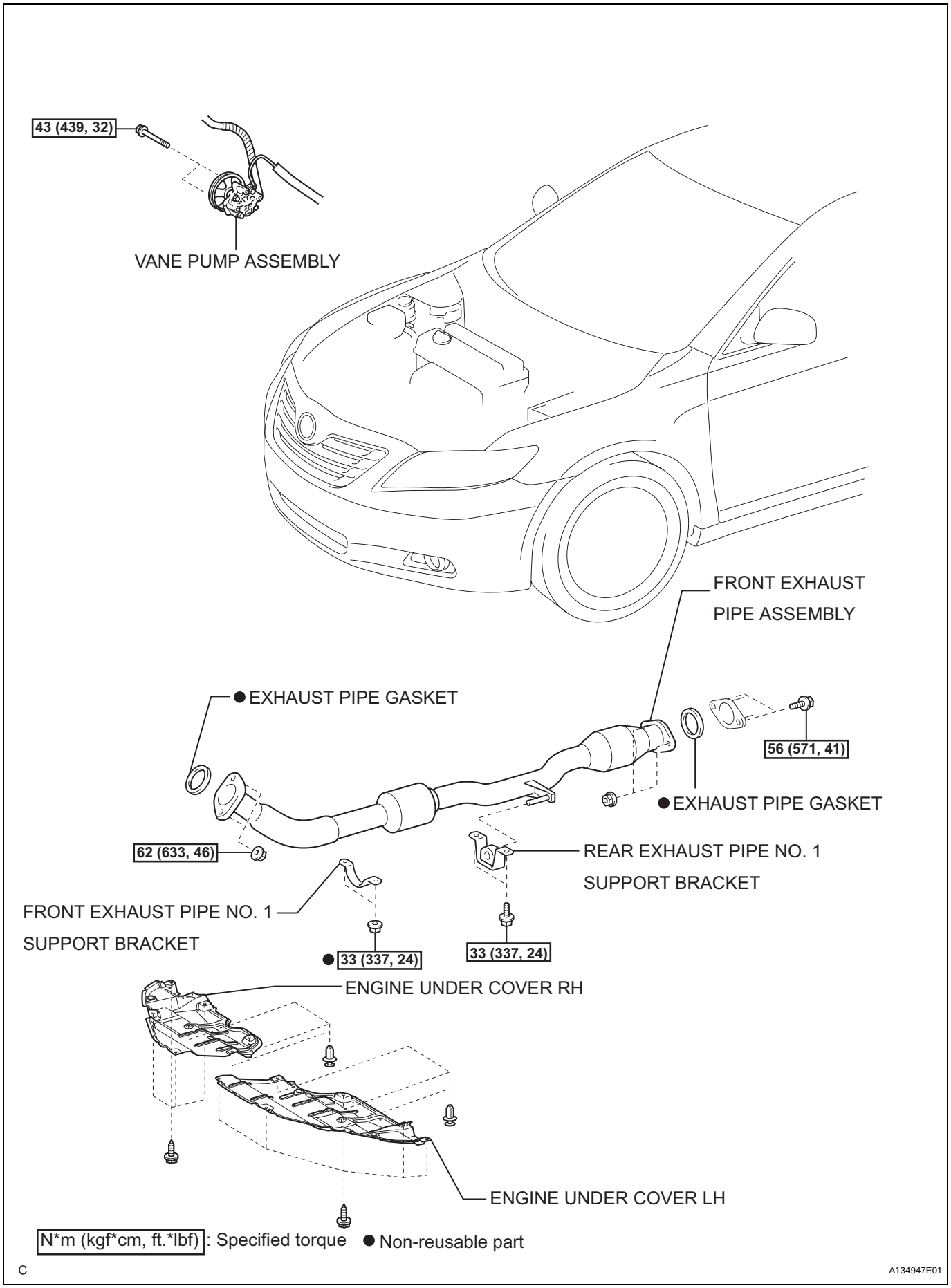
43 (439, 32)
VANE PUMP ASSEMBLY
FRONT EXHAUST PIPE ASSEMBLY
● EXHAUST PIPE GASKET
56 (571, 41)
● EXHAUST PIPE GASKET
62 (633, 46)
REAR EXHAUST PIPE NO. 1 SUPPORT BRACKET
FRONT EXHAUST PIPE NO. 1 SUPPORT BRACKET
● 33 (337, 24)
33 (337, 24)
ENGINE UNDER COVER RH
ENGINE UNDER COVER LH
N*m (kgf*cm, ft.*lbf): Specified torque
● Non-reusable part
C
A134947E01

EM

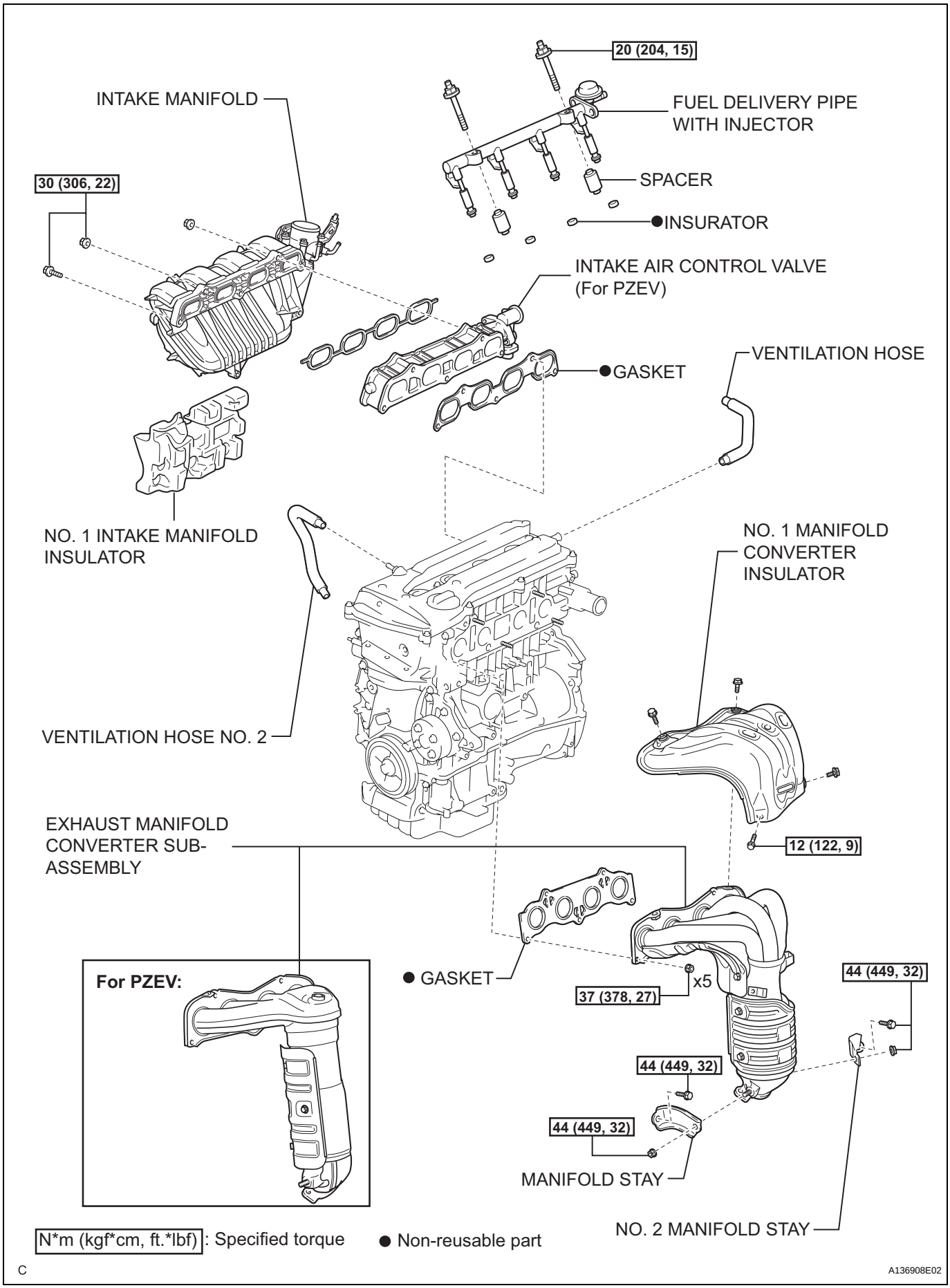
20 (204, 15)
INTAKE MANIFOLD
FUEL DELIVERY PIPE WITH INJECTOR
30 (306, 22)
SPACER
●INSURATOR
INTAKE AIR CONTROL VALVE (For PZEV)
VENTILATION HOSE
●GASKET
NO. 1 INTAKE MANIFOLD INSULATOR
NO. 1 MANIFOLD CONVERTER INSULATOR
VENTILATION HOSE NO. 2
EXHAUST MANIFOLD CONVERTER SUB-ASSEMBLY
12 (122, 9)
For PZEV:
● GASKET
37 (378, 27)
x5
44 (449, 32)
44 (449, 32)
44 (449, 32)
MANIFOLD STAY
NO. 2 MANIFOLD STAY
N*m (kgf*cm, ft.*lbf): Specified torque
● Non-reusable part
C
A136908E02

EM

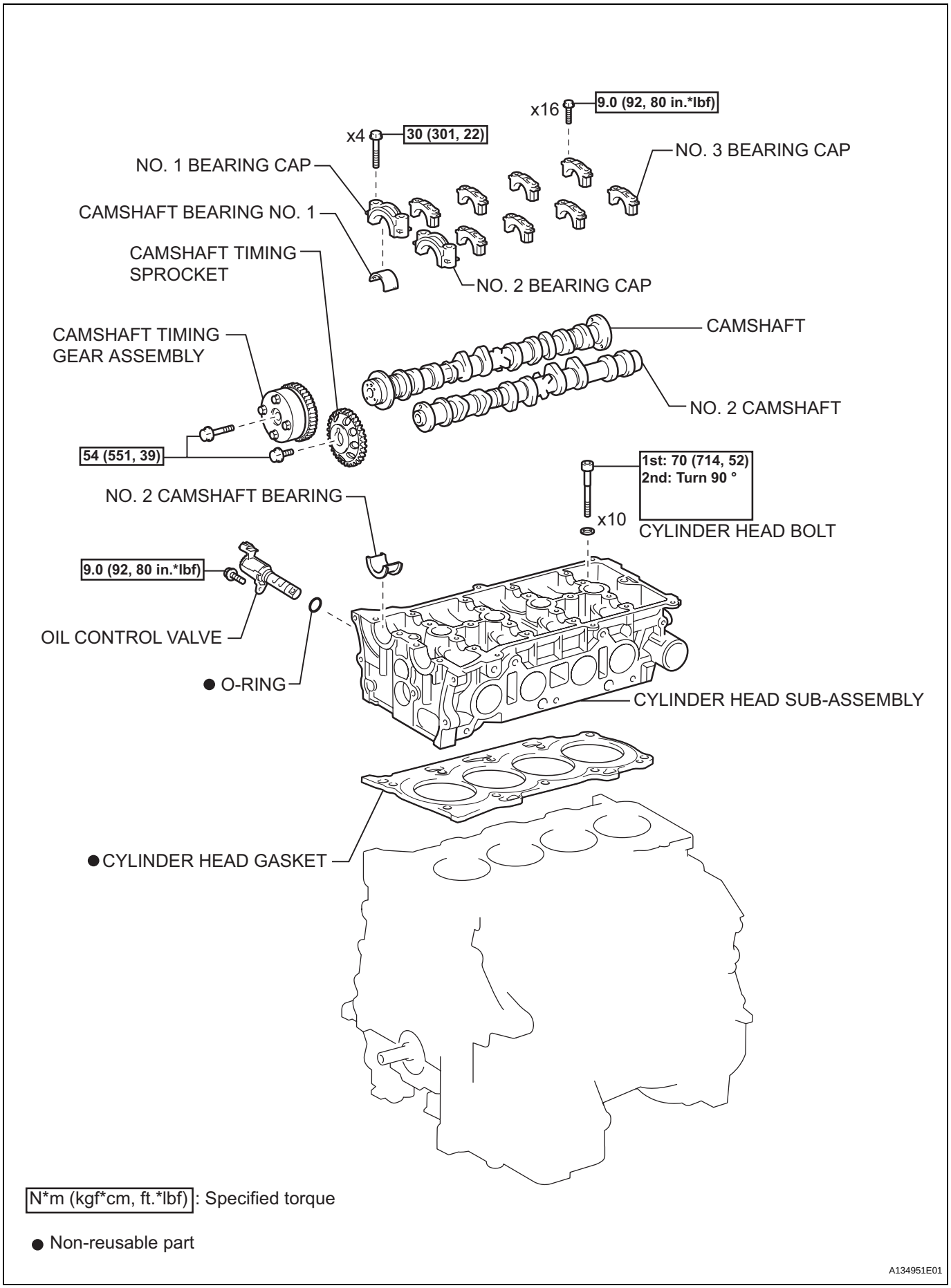
x16
9.0 (92, 80 in.*lbf)
x4
30 (301, 22)
NO. 3 BEARING CAP
NO. 1 BEARING CAP
CAMSHAFT BEARING NO. 1
CAMSHAFT TIMING SPROCKET
NO. 2 BEARING CAP
CAMSHAFT
CAMSHAFT TIMING GEAR ASSEMBLY
NO. 2 CAMSHAFT
54 (551, 39)
1st: 70 (714, 52)
2nd: Turn 90 °
NO. 2 CAMSHAFT BEARING
x10
CYLINDER HEAD BOLT
9.0 (92, 80 in.*lbf)
OIL CONTROL VALVE
● O-RING
CYLINDER HEAD SUB-ASSEMBLY
●CYLINDER HEAD GASKET
N*m (kgf*cm, ft.*lbf): Specified torque
● Non-reusable part
A134951E01

EM

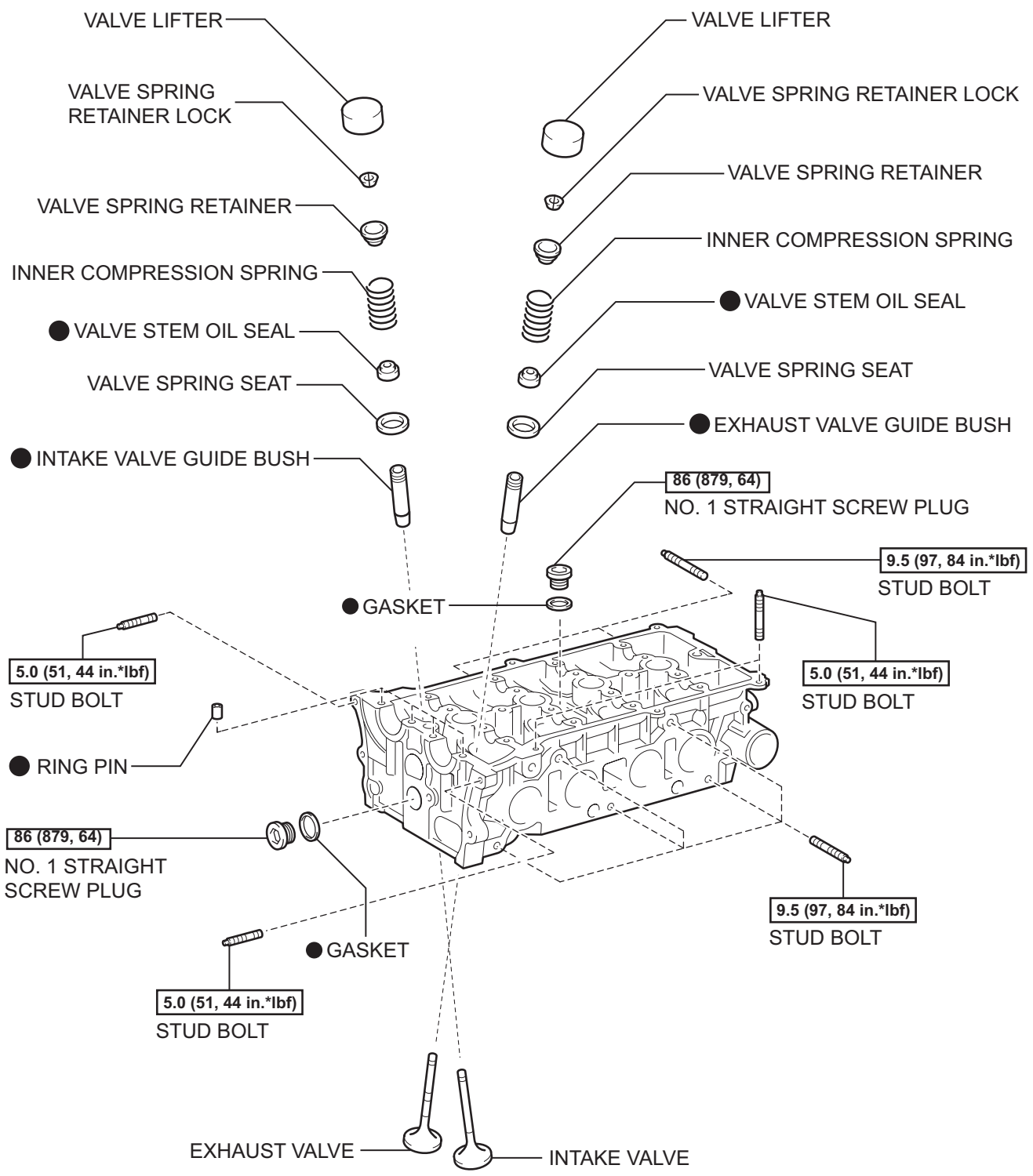

N*m (kgf*cm, ft.*lbf) : Specified torque ● Non-reusable part

A136083E01

REMOVAL

1. **DISCHARGE FUEL SYSTEM PRESSURE**
   HINT:
   See page FU-1.
2. **DISCONNECT CABLE FROM NEGATIVE BATTERY TERMINAL**
3. **REMOVE ENGINE UNDER COVER LH**
4. **REMOVE ENGINE UNDER COVER RH**
5. **REMOVE FRONT FENDER APRON SEAL RH**
6. **REMOVE NO. 1 ENGINE COVER SUB-ASSEMBLY (See page EM-94)**
7. **DRAIN ENGINE COOLANT (See page CO-5)**
8. **DRAIN ENGINE OIL (See page LU-4)**
9. **REMOVE WINDSHIELD WIPER LINK ASSEMBLY**
   HINT:
   See page WW-9.
10. **REMOVE COWL TOP PANEL OUTER SUB-ASSEMBLY (See page ES-424)**
11. **REMOVE AIR CLEANER INLET ASSEMBLY (See page EM-94)**
12. **REMOVE AIR CLEANER CAP SUB-ASSEMBLY (See page ES-416)**
13. **REMOVE AIR CLEANER CASE SUB-ASSEMBLY (See page EM-95)**
14. **REMOVE BATTERY (See page EM-95)**
15. **REMOVE THROTTLE BODY ASSEMBLY (See page ES-417)**
16. **DISCONNECT FUEL TUBE SUB-ASSEMBLY (See page FU-12)**
17. **REMOVE FUEL DELIVERY PIPE WITH INJECTOR (See page FU-13)**
18. **REMOVE INTAKE MANIFOLD (See page ES-424)**
19. **REMOVE INTAKE AIR CONTROL VALVE (For PZEV) (See page IT-7)**
20. **REMOVE NO. 1 INTAKE MANIFOLD INSULATOR (See page EM-103)**
21. **REMOVE FRONT EXHAUST PIPE ASSEMBLY**
    HINT:
    See page EX-2.
22. **REMOVE NO. 2 ENGINE MOUNTING STAY RH (See page EM-95)**
23. **REMOVE ENGINE MOVING CONTROL ROD SUB-ASSEMBLY (See page EM-95)**

24. REMOVE NO. 2 ENGINE MOUNTING BRACKET RH (See page EM-96)

25. REMOVE V-RIBBED BELT (See page EM-6)

26. REMOVE GENERATOR ASSEMBLY (See page CH-11)

27. REMOVE OIL LEVEL GAUGE SUB-ASSEMBLY

28. REMOVE OIL LEVEL GAUGE GUIDE (See page EM-104)

29. REMOVE MANIFOLD STAY (See page EM-104)

30. REMOVE NO. 2 MANIFOLD STAY (See page EM-104)

31. REMOVE EXHAUST MANIFOLD CONVERTER SUB-ASSEMBLY (See page EM-104)

32. REMOVE CHAIN SUB-ASSEMBLY

HINT:
See page EM-21.

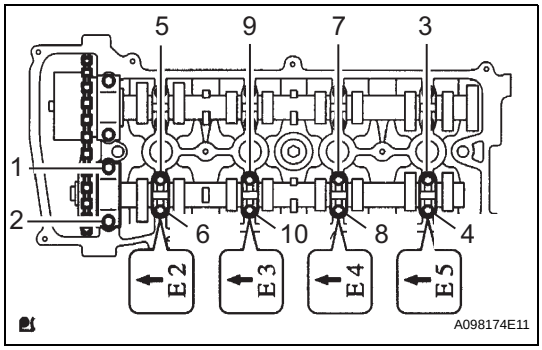

33. REMOVE NO. 2 CAMSHAFT

(a) Using several steps, uniformly loosen and remove the 10 bearing cap bolts in the sequence shown in the illustration.

(b) Remove the 5 bearing caps and No. 2 camshaft.

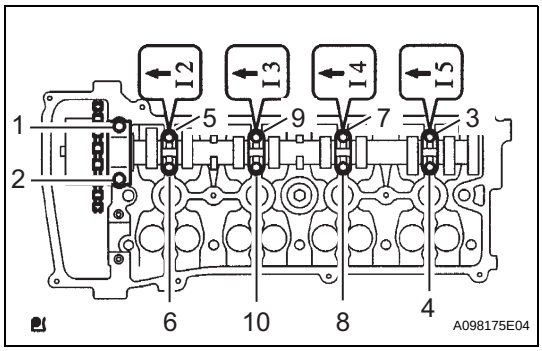

34. REMOVE CAMSHAFT

(a) Using several steps, uniformly loosen and remove the 10 bearing cap bolts in the sequence shown in the illustration.

(b) Remove the 5 bearing caps and camshaft.

35. REMOVE CAMSHAFT TIMING OIL CONTROL VALVE ASSEMBLY (See page ES-405)

36. DISCONNECT RADIATOR HOSE INLET (See page EM-96)

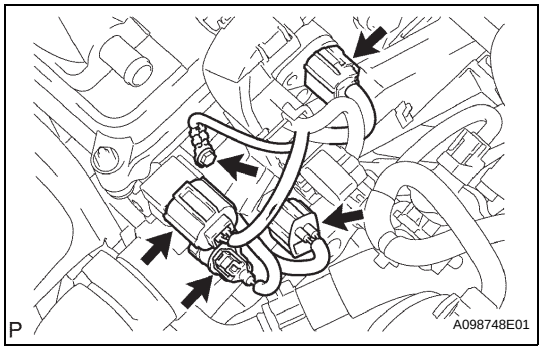

37. DISCONNECT ENGINE WIRE

(a) Disconnect the radio setting condenser connector.

(b) Disconnect the engine oil pressure switch connector.

(c) Disconnect the engine coolant temperature sensor connector.

(d) Disconnect the camshaft position sensor connector.

(e) Remove the bolt and ground cable.

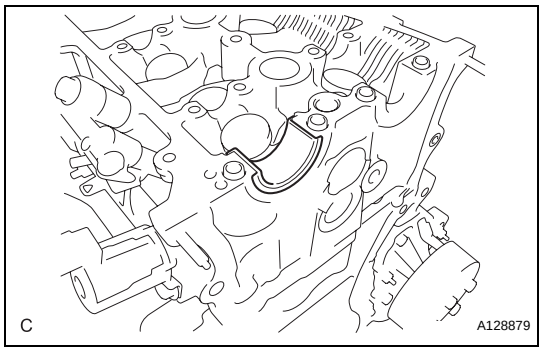

38. REMOVE NO. 2 CAMSHAFT BEARING

(a) Remove the No. 2 camshaft bearing.

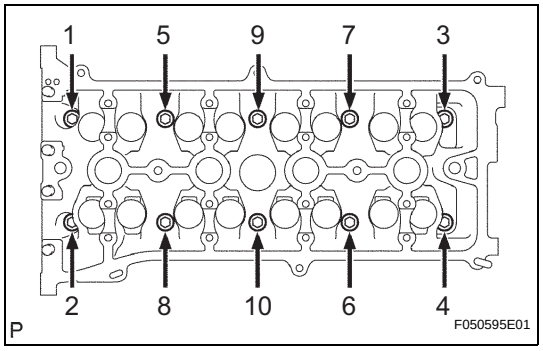

39. REMOVE CYLINDER HEAD SUB-ASSEMBLY

(a) Using several steps, uniformly loosen and remove the 10 cylinder head bolts and 10 plate washers with a 10 mm bi-hexagon wrench in the sequence shown in the illustration.

NOTICE:

Head warpage or cracking could result from removing the bolts in the wrong order.

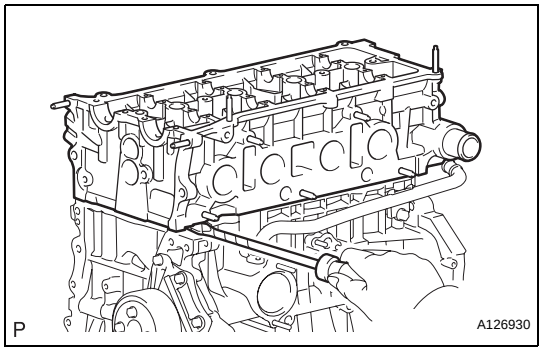

(b) Using a screwdriver with its tip wrapped with tape, pry between the cylinder head and cylinder block, and remove the cylinder head.

NOTICE:

Be careful not to damage the contact surfaces of the cylinder head and cylinder block.

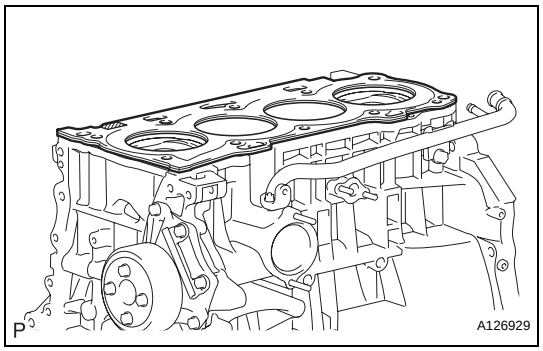

40. REMOVE CYLINDER HEAD GASKET

(a) Remove the cylinder head gasket.

DISASSEMBLY

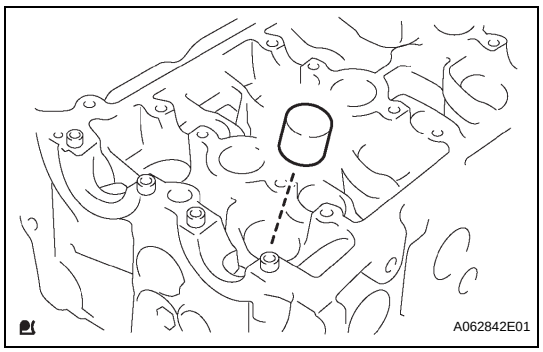

1. REMOVE VALVE LIFTER

(a) Remove the valve lifters.

HINT:

Arrange the valve lifters in the correct order.

EM

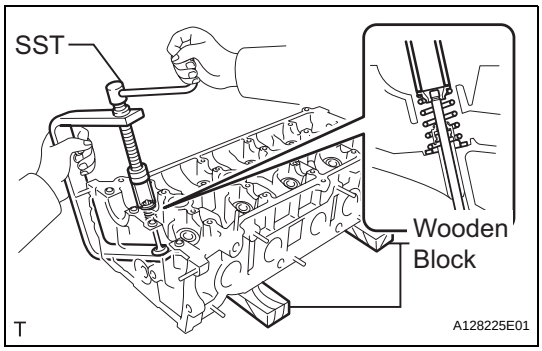

2. REMOVE INTAKE VALVE

(a) Using SST and wooden blocks, compress and remove the valve retainer locks.
SST 09202-70020 (09202-00010)

(b) Remove the retainer, valve spring and valve.
HINT:
Arrange the removed parts in the correct order.

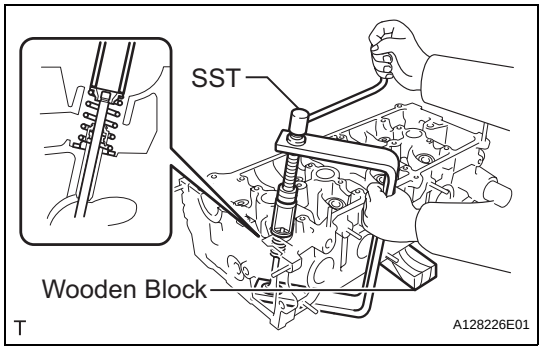

3. REMOVE EXHAUST VALVE

(a) Using SST and wooden blocks, compress and remove the valve retainer locks.
SST 09202-70020 (09202-00010)

(b) Remove the retainer, valve spring and valve.
HINT:
Arrange the removed parts in the correct order.

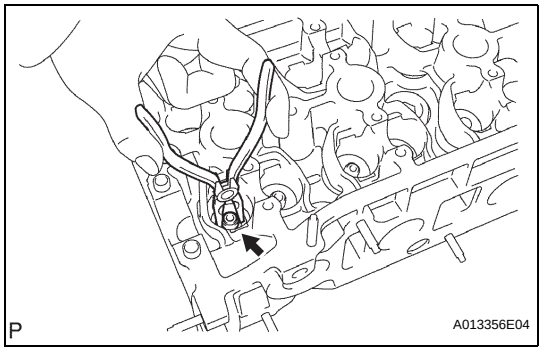

4. REMOVE VALVE STEM OIL SEAL

(a) Using needle-nose pliers, remove the oil seals.

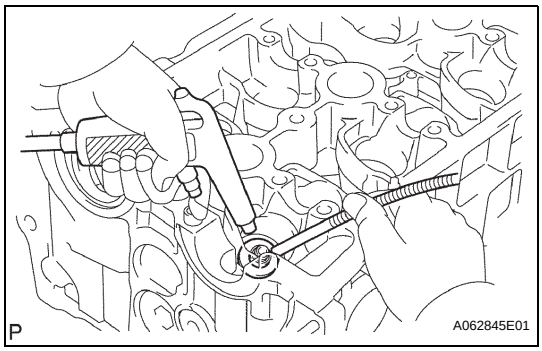

5. REMOVE VALVE SPRING SEAT

(a) Using compressed air and a magnetic finger, remove the valve spring seats by blowing air onto them.

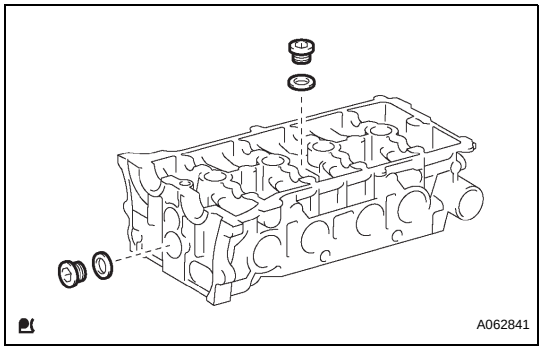

6. REMOVE NO. 1 STRAIGHT SCREW PLUG

(a) Using a 14 mm straight hexagon wrench, remove the 2 screw plugs and 2 gaskets.
NOTICE:
If water leaks from the straight screw plug or the plug corrodes, replace it.

7. REMOVE STUD BOLT

8. REMOVE RING PIN

9. REMOVE INTAKE VALVE GUIDE BUSH

(a) Heat the cylinder head to 80 to 100°C (176 to 212°F).

(b) Place the cylinder head on wooden blocks.

(c) Using SST and a hammer, tap out the guide bush.
SST 09201-10000 (09201-01050), 09950-70010 (09951-07100)

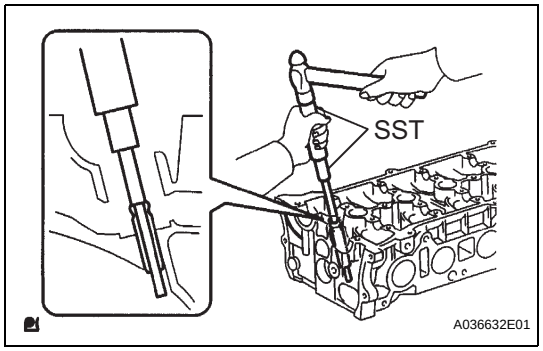

10. REMOVE EXHAUST VALVE GUIDE BUSH

(a) Heat the cylinder head to 80 to 100°C (176 to 212°F).

(b) Place the cylinder head on wooden blocks.

(c) Using SST and a hammer, tap out the guide bush.
SST 09201-10000 (09201-01050), 09950-70010 (09951-07100)

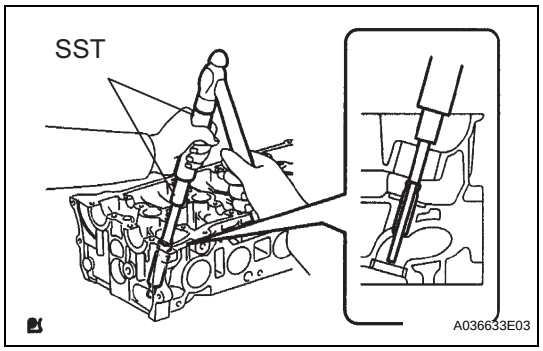

EM

INSPECTION

1. INSPECT CYLINDER HEAD FOR FLATNESS

(a) Using a precision straight edge and a feeler gauge, measure the surface contacting the cylinder block and the manifolds for warpage.
Maximum warpage

Item	Specified Condition
Cylinder block side	0.05 mm (0.0020 in.)
Intake manifold side	0.08 mm (0.0031 in.)
Exhaust manifold side	0.08 mm (0.0031 in.)

If the warpage is greater than the maximum, replace the cylinder head.

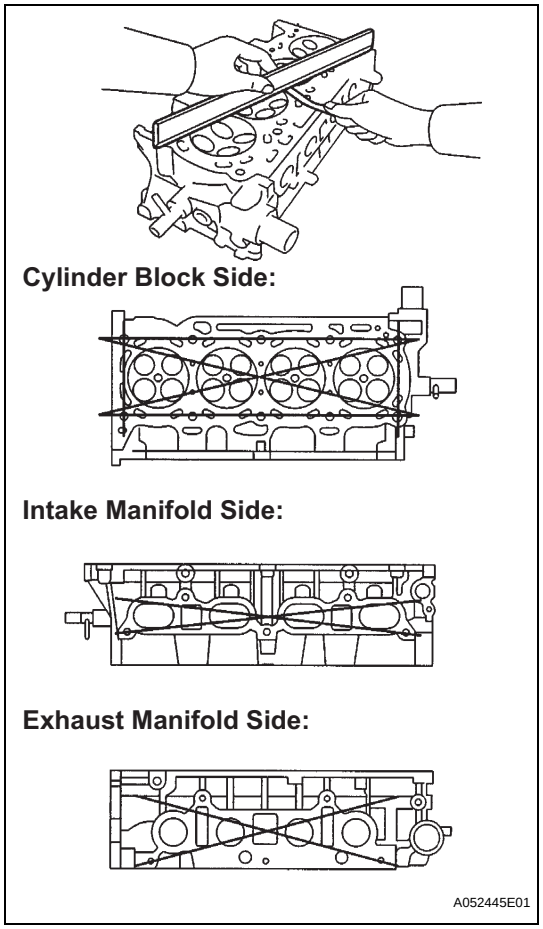

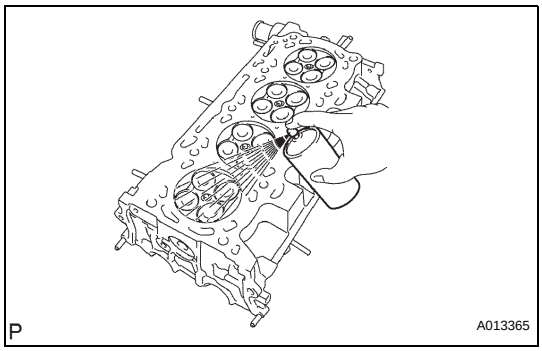

2. INSPECT CYLINDER HEAD FOR CRACKS

(a) Using a dye penetrant, check the intake ports, exhaust ports and cylinder surface for cracks. If cracked, replace the cylinder head.

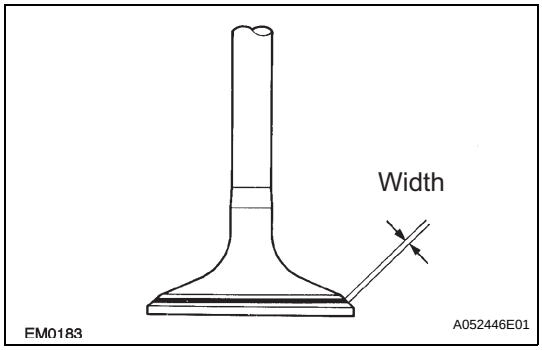

3. INSPECT VALVE SEATS

(a) Apply a light coat of prussian blue to the valve face.
(b) Lightly press the valve face against the valve seat.
(c) Check the valve face and valve seat according to the following procedure:
  (1) If prussian blue appears 360° around the valve face, the valve face is concentric. If not, replace the valve.
  (2) If prussian blue appears 360° around the valve seat, the guide and valve face are concentric. If not, resurface the valve seat.
  (3) Check that the valve seat contact is in the middle of the valve face with the width between 1.0 to 1.4 mm (Intake side (0.039 to 0.055 in.)).
  (4) Check that the valve seat contact is in the middle of the valve face with the width between 1.2 to 1.6 mm (Exhaust side (0.047 to 0.063 in.)).

4. REPAIR VALVE SEATS

NOTICE:

- **Repair the seat while checking the seating position.**
- **Keep the lip free from foreign matter.**

(a) Using a 45° cutter, resurface the valve seat so that the valve seat width is more than the specification.

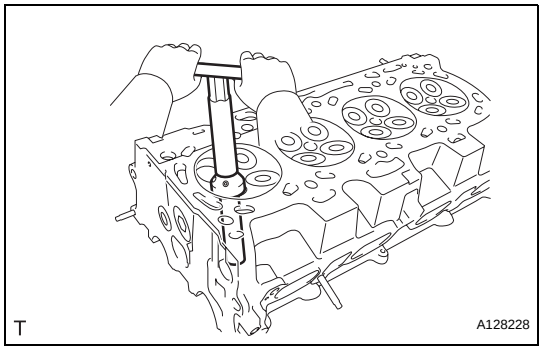

EM

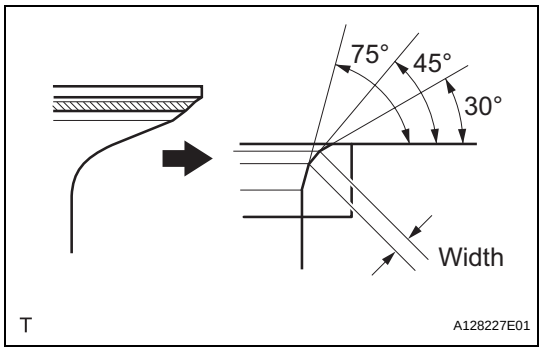

(b) Using 30° and 75° cutters, correct the valve seat so that the valve contacts the entire circumference of the seat. The contact should be in the center of the valve seat, and the valve seat width should be maintained within the specified range around the entire circumference of the seat.

Valve Seat Width

Item	Specified Condition
Intake Side	1.0 to 1.4 mm (0.039 to 0.055 in.)
Exhaust Side	1.2 to 1.6 mm (0.047 to 0.063 in.)

(c) Handrub the valve and valve seat with an abrasive compound.

(d) Check the valve seating position.

5. INSPECT CAMSHAFT THRUST CLEARANCE

(a) Install the camshafts (See page EM-70).

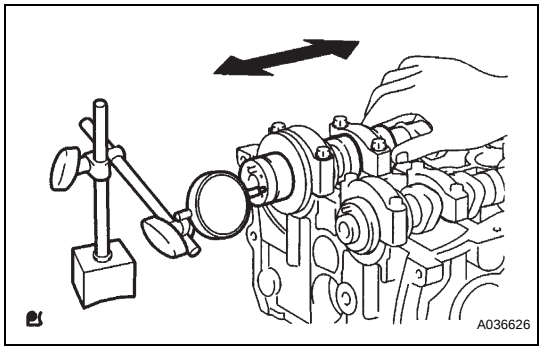

(b) Using a dial indicator, measure the thrust clearance while moving the camshaft back and forth.

Standard thrust clearance

Item	Specified Condition
Intake	0.040 to 0.095 mm (0.0016 to 0.0037 in.)
Exhaust	0.080 to 0.135 mm (0.0032 to 0.0053 in.)

Maximum thrust clearance

Item	Specified Condition
Intake	0.110 mm (0.0043 in.)
Exhaust	0.150 mm (0.0059 in.)

If the thrust clearance is greater than the maximum, replace the cylinder head. If the thrust surface is damaged, replace the camshaft.

6. INSPECT CAMSHAFT OIL CLEARANCE

(a) Clean the bearing caps and camshaft journals.

(b) Place the camshafts on the cylinder head.

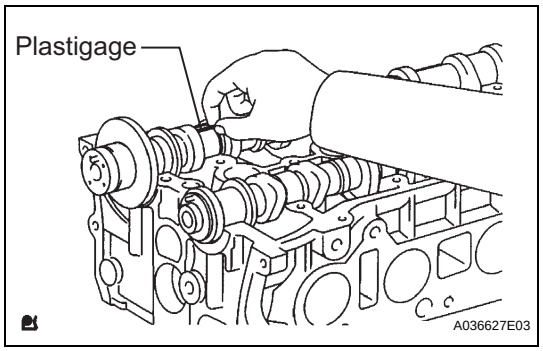

(c) Lay a strip of Plastigage across each of the camshaft journals.

(d) Install the bearing caps (See page EM-70).

NOTICE:

Do not turn the camshaft.

(e) Remove the bearing caps (See page EM-53).

EM

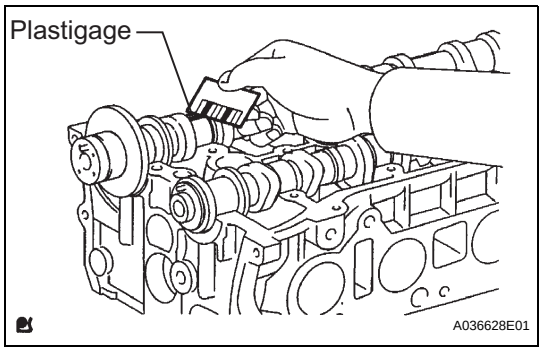

(f) Measure the Plastigage at its widest point.

Standard oil clearance

Item	Specified Condition
Camshaft No. 1 journal bearing mark 1	0.007 to 0.038 mm (0.0003 to 0.0015 in.)
Camshaft No. 1 journal bearing mark 2	0.008 to 0.038 mm (0.0003 to 0.0015 in.)
Camshaft No. 1 journal bearing mark 3	0.008 to 0.038 mm (0.0003 to 0.0015 in.)
Camshaft other journals	0.025 to 0.062 mm (0.0010 to 0.0024 in.)
No. 2 camshaft No. 1 journal	0.015 to 0.054 mm (0.0006 to 0.0021 in.)
No. 2 camshaft other journals	0.025 to 0.062 mm (0.0010 to 0.0024 in.)

Maximum oil clearance

Item	Specified Condition
Intake	0.070 mm (0.0028 in.)
Exhaust	0.100 mm (0.0039 in.)

EM

NOTICE:
Completely remove the Plastigage after the inspection.

- If the oil clearance is greater than the maximum, replace the camshaft. If necessary, replace the cylinder head.
- If the oil clearance on the camshaft No. 1 journal is greater than the maximum, choose a new bearing and install it.

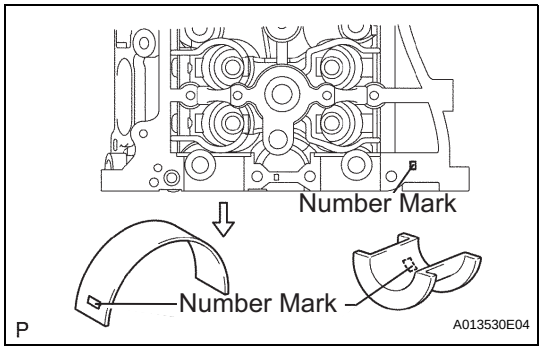

(1) Check the number mark shown in the illustration.

Cylinder head journal bore diameter

Mark 1	Mark 2	Mark 3
40.000 to 40.008 mm (1.5748 to 1.5752 in.)	40.009 to 40.017 mm (1.5752 to 1.5755 in.)	40.018 to 40.025 mm (1.5755 to 1.5758 in.)

Standard bearing center wall thickness

Mark 1	Mark 2	Mark 3
2.000 to 2.004 mm (0.0787 to 0.0789 in.)	2.005 to 2.008 mm (0.0789 to 0.0791 in.)	2.009 to 2.012 mm (0.0791 to 0.0792 in.)

Camshaft journal diameter

Mark 1	Mark 2	Mark 3
35.971 to 35.985 mm (1.4162 to 1.4167 in.)	35.971 to 35.985 mm (1.4162 to 1.4167 in.)	35.971 to 35.985 mm (1.4162 to 1.4167 in.)

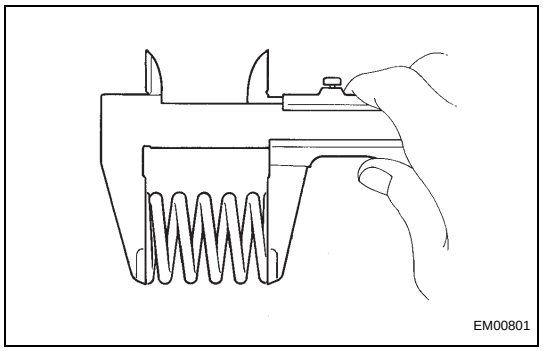

7. INSPECT INNER COMPRESSION SPRING

(a) Using vernier calipers, measure the free length of the valve spring.
Free length:
47.43 mm (1.867 in.)
If the free length is not as specified, replace the valve spring.

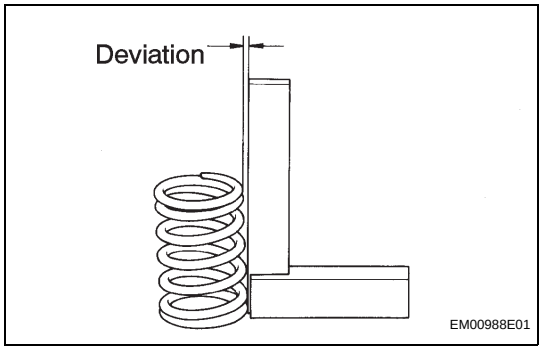

(b) Using steel squares, measure the deviation of the valve spring.
Maximum deviation:
1.6 mm (0.063 in.)
If the deviation is greater than the maximum, replace the valve spring.

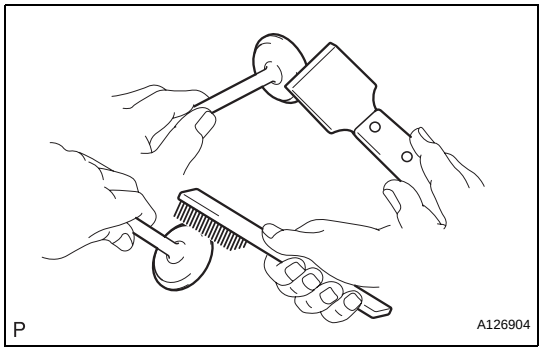

8. INSPECT INTAKE VALVE

(a) Using a gasket scraper, scrape off any carbon on the valve head.

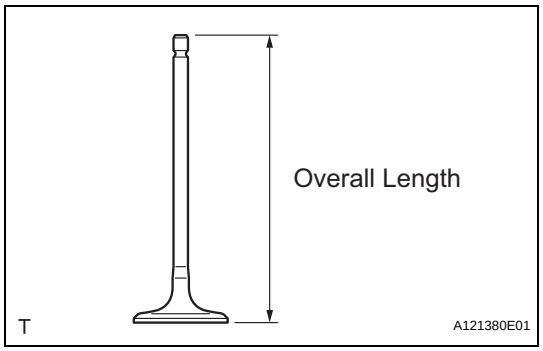

(b) Using vernier calipers, measure the overall length of the valve.
Standard overall length:
101.71 mm (4.0043 in.)
Minimum overall length:
101.21 mm (3.9846 in.)
If the overall length is less than the minimum, replace the valve.

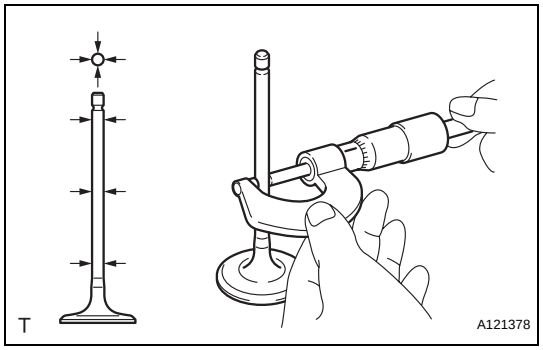

(c) Using a micrometer, measure the diameter of the valve stem.
Valve stem diameter:
5.470 to 5.485 mm (0.2154 to 0.2159 in.)
If the valve stem is not as specified, check the oil clearance.

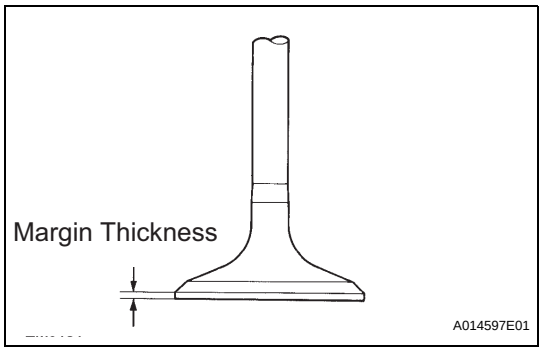

(d) Using vernier calipers, measure the valve head margin thickness.
Standard margin thickness:
1.05 to 1.45 mm (0.0413 to 0.0571 in.)
Minimum margin thickness:
0.50 mm (0.0197 in.)
If the margin thickness is less than the minimum, replace the valve.

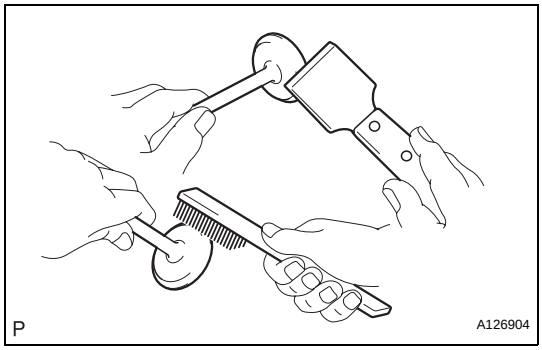

9. INSPECT EXHAUST VALVE

(a) Using a gasket scraper, scrape off any carbon on the valve head.

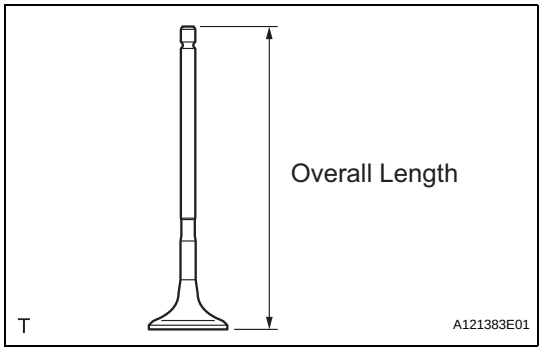

(b) Using vernier calipers, measure the overall length of the valve.
Standard overall length:
101.15 mm (3.9823 in.)
Minimum overall length:
100.70 mm (3.9646 in.)
If the overall length is less than the minimum, replace the valve.

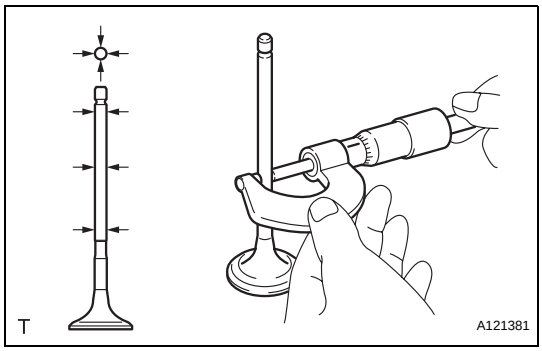

(c) Using a micrometer, measure the diameter of the valve stem.
Valve stem diameter:
5.465 to 5.480 mm (0.2152 to 0.2157 in.)
If the valve stem is not as specified, check the oil clearance.

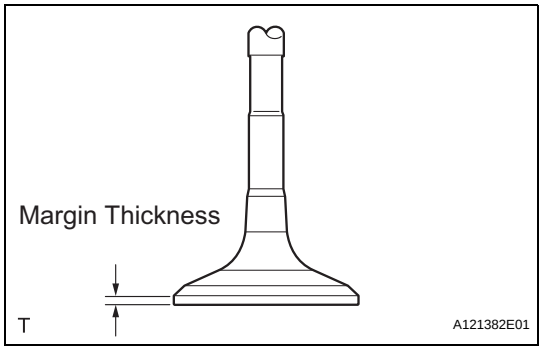

(d) Using vernier calipers, measure the valve head margin thickness.
Standard margin thickness:
1.20 to 1.60 mm (0.0472 to 0.0630 in.)
Minimum margin thickness:
0.50 mm (0.0197 in.)
If the margin thickness is less than the minimum, replace the valve.

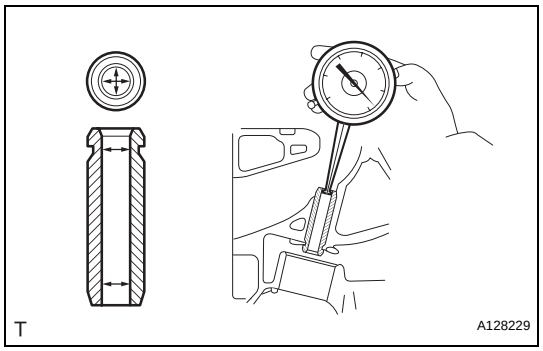

10. INSPECT INTAKE VALVE GUIDE BUSH

(a) Using a caliper gauge, measure the inside diameter of the guide bush.
Bushing inside diameter:
5.510 to 5.530 mm (0.2169 to 0.2177 in.)

(b) Subtract the valve stem diameter measurement from the guide bush inside diameter measurement.
Standard oil clearance:
0.025 to 0.060 mm (0.0010 to 0.0024 in.)
Maximum oil clearance:
0.080 mm (0.0031 in.)
If the clearance is greater than the maximum, replace the valve and guide bush.

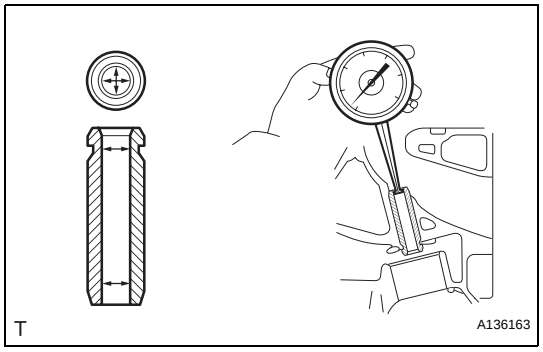

11. INSPECT EXHAUST VALVE GUIDE BUSH

(a) Using a caliper gauge, measure the inside diameter of the guide bush.
Bushing inside diameter:
5.510 to 5.530 mm (0.2169 to 0.2177 in.)

(b) Subtract the valve stem diameter measurement from the guide bushing inside diameter measurement.
Standard oil clearance:
0.030 to 0.065 mm (0.0012 to 0.0026 in.)
Maximum oil clearance:
0.100 mm (0.0039 in.)
If the clearance is greater than the maximum, replace the valve and guide bush.

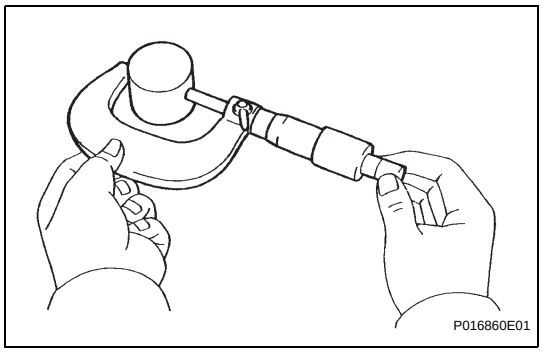

12. INSPECT VALVE LIFTER

(a) Using a micrometer, measure the lifter diameter.
Lifter diameter:
30.966 to 30.976 mm (1.2191 to 1.2195 in.)

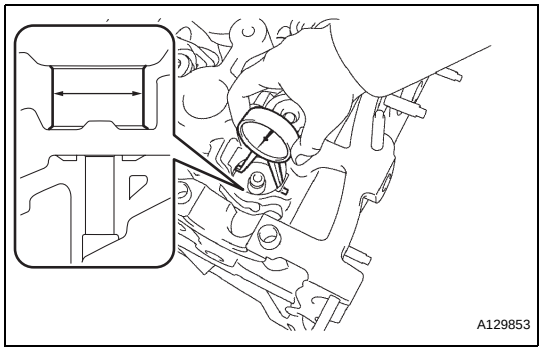

(b) Using a caliper gauge, measure the lifter bore diameter of the cylinder head.
Standard lifter bore diameter:
31.009 to 31.025 mm (1.2208 to 1.2215 in.)

(c) Subtract the lifter diameter measurement from the lifter bore diameter measurement.
Standard oil clearance:
0.033 to 0.059 mm (0.0013 to 0.0023 in.)
Maximum oil clearance:
0.070 mm (0.0028 in.)
If the oil clearance is greater than the maximum, replace the lifter. If necessary, replace the cylinder head.

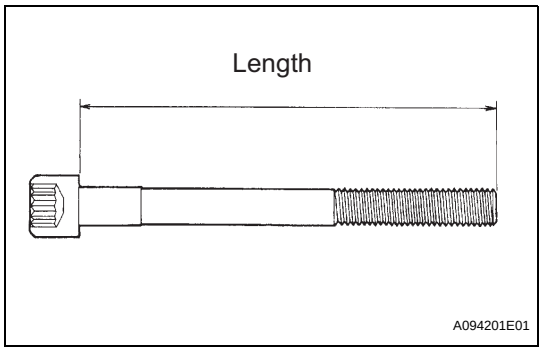

13. INSPECT CYLINDER HEAD SET BOLT

(a) Using vernier calipers, measure the length of the head bolts from the seat to the end.
Standard bolt length:
141.3 to 142.7 mm (5.563 to 5.618 in.)
Maximum bolt length:
144.2 mm (5.677 in.)
If the bolt length is greater than the maximum, replace the cylinder head set bolt.

REASSEMBLY

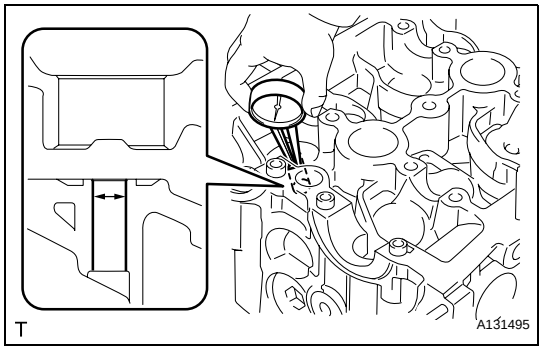

1. INSTALL INTAKE VALVE GUIDE BUSH

(a) Using a caliper gauge, measure the bush bore diameter of the cylinder head.
Cylinder bore diameter:
10.285 to 10.306 mm (0.4049 to 0.4057 in.)
Select a new guide bush (STD or O/S 0.05)

Bush size	Bush bore diameter
Use STD	10.285 to 10.306 mm (0.4049 to 0.4057 in.)
Use O/S 0.05	10.335 to 10.356 mm (0.4069 to 0.4077 in.)

If the bush bore diameter of the cylinder head is greater than 10.306 mm (0.4057 in.), machine the bush bore to the dimension of 10.335 to 10.356 mm (0.4069 to 0.4077 in.) to install a O/S 0.05 valve guide bush. If the bush bore diameter of the cylinder head is greater than 10.356 mm (0.4077 in.), replace the cylinder head.

(b) Heat the cylinder head to 80 to 100°C (176 to 212°F).

(c) Place the cylinder head on wooden blocks.

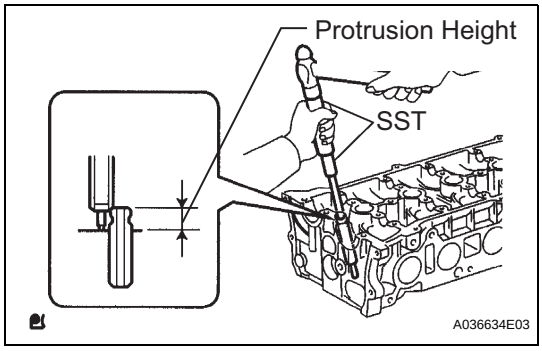

(d) Using SST and a hammer, tap in a new guide bush to the specified protrusion height.
SST 09201-10000 (09201-01050), 09950-70010 (09951-07100)
Protrusion height:
9.6 to 10.0 mm (0.3779 to 0.3937 in.)

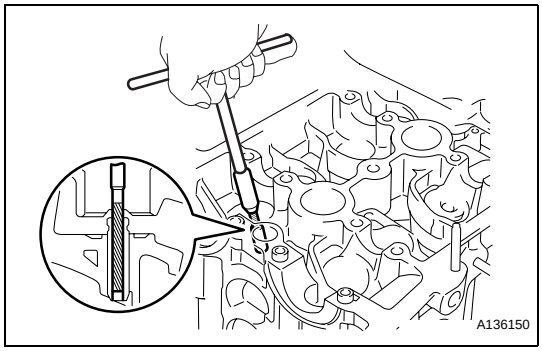

(e) Using a sharp 5.5 mm reamer, ream the guide bush to obtain the standard specified clearance between the guide bush and valve stem.
Standard oil clearance:
0.025 to 0.060 mm (0.0010 to 0.0024 in.)

EM

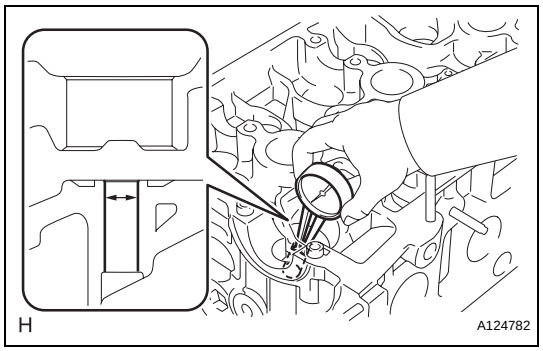

2. INSTALL EXHAUST VALVE GUIDE BUSH

(a) Using a caliper gauge, measure the bush bore diameter of the cylinder head.
Diameter:
10.285 to 10.306 mm (0.4049 to 0.4057 in.)
Select a new guide bush (STD or O/S 0.05)

Bush size	Bush bore diameter
Use STD	10.285 to 10.306 mm (0.4049 to 0.4057 in.)
Use O/S 0.05	10.335 to 10.356 mm (0.4069 to 0.4077 in.)

If the bush bore diameter of the cylinder head is greater than 10.306 mm (0.4057 in.), machine the bush bore to the dimension of 10.335 to 10.356 mm (0.4069 to 0.4077 in.) to install a O/S 0.05 valve guide bush. If the bush bore diameter of the cylinder head is greater than 10.356 mm (0.4077 in.), replace the cylinder head.

(b) Heat the cylinder head to 80 to 100°C (176 to 212°F).

(c) Place the cylinder head on wooden blocks.

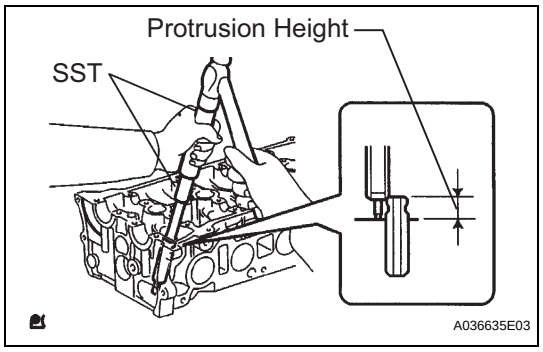

(d) Using SST and a hammer, tap in a new guide bush to the specified protrusion height.
SST 09201-10000 (09201-01050), 09950-70010 (09951-07100)
Protrusion height:
9.6 to 10.0 mm (0.3779 to 0.3937 in.)

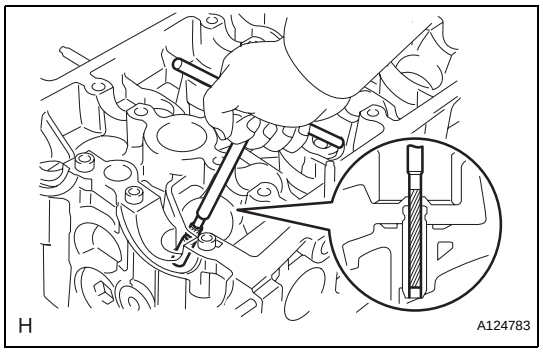

(e) Using a sharp 5.5 mm reamer, ream the guide bush to obtain the standard specified clearance between the guide bush and valve stem.
Standard oil clearance:
0.030 to 0.065 mm (0.0012 to 0.0026 in.)

EM

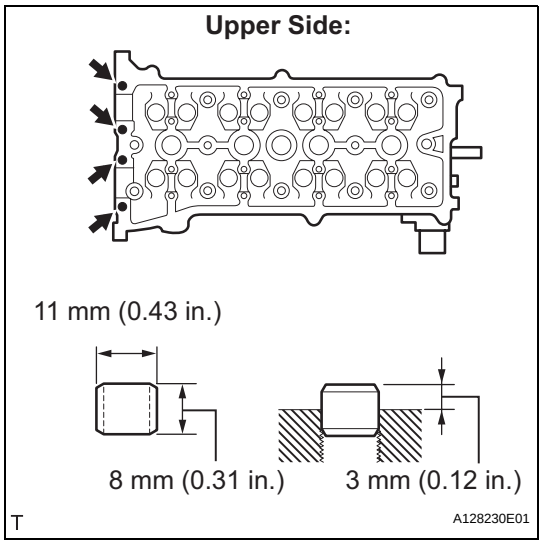

3. INSTALL RING W/HEAD PIN

(a) Using a plastic-faced hammer, tap in a new ring pin to the specified protrusion height.
Protrusion height:
3 mm (0.12 in.)

4. INSTALL STUD BOLT

NOTICE:
If the stud bolt is deformed or the threads are damaged, replace it.

(a) Using E5 and E7 "torx" sockets, install the stud bolts.

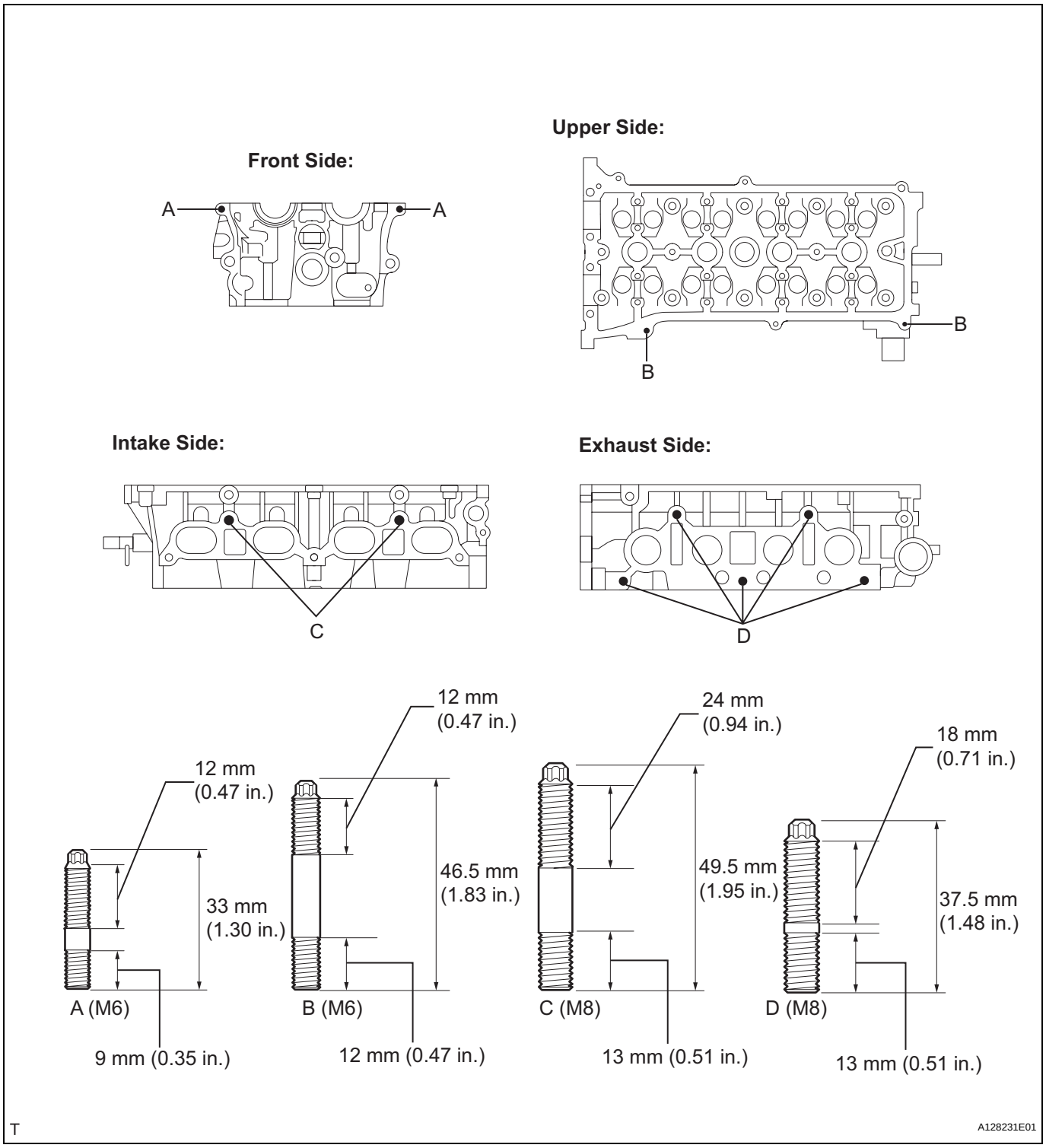

Torque: Bolt A
5.0 N*m (51 kgf*cm, 44 in.*lbf)
Bolt B
5.0 N*m (51 kgf*cm, 44 in.*lbf)
Bolt C
9.5 N*m (97 kgf*cm, 84 in.*lbf)
Bolt D
9.5 N*m (97 kgf*cm, 84 in.*lbf)

EM

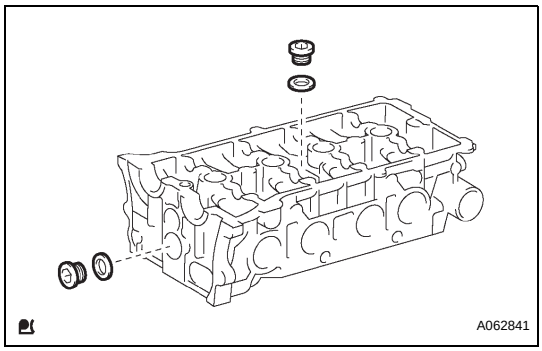

5. INSTALL NO. 1 STRAIGHT SCREW PLUG

(a) Using a 14 mm straight hexagon wrench, install 2 new gaskets and the 2 straight screw plugs.

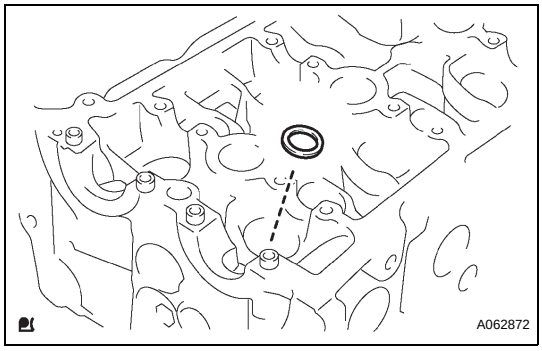

6. INSTALL VALVE SPRING SEAT

(a) Install the valve spring seats to the cylinder head.

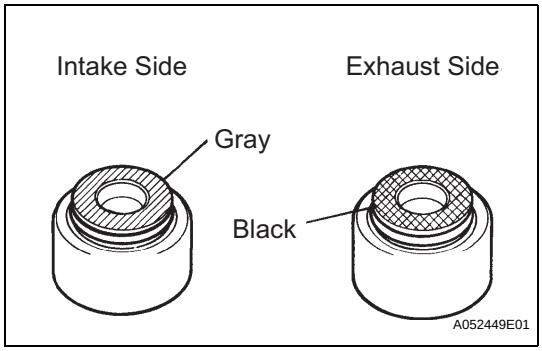

7. INSTALL VALVE STEM OIL SEAL

(a) Apply a light coat of engine oil to a new oil seal.
NOTICE:
Pay close attention when installing the intake and exhaust oil seals. For example, installing the intake oil seal into the exhaust side or installing the exhaust oil seal to the intake side can cause installation problems later.
HINT:
The intake valve oil seal is gray and the exhaust valve oil seal is black.

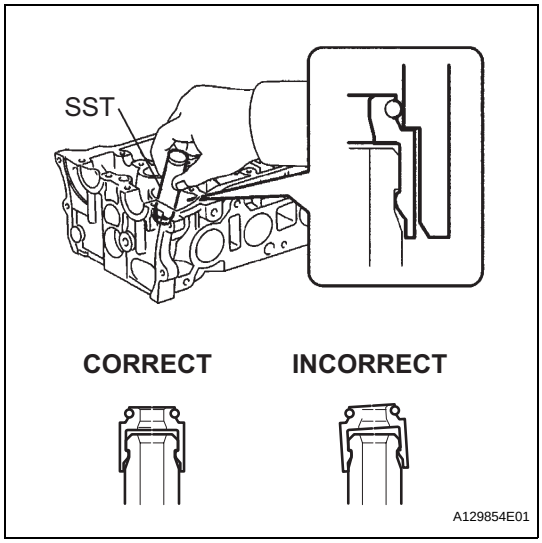

(b) Using SST, push in the oil seal.
SST 09201-41020
NOTICE:
Failure to use SST will cause the seal to be damaged or improperly seated.

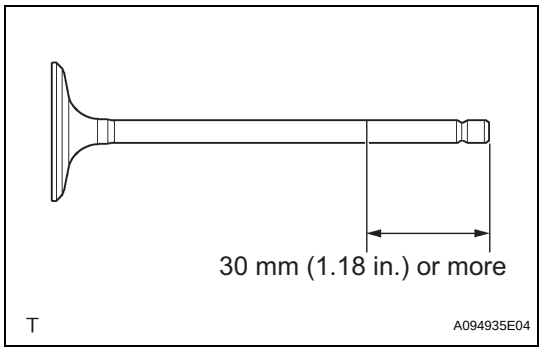

8. INSTALL INTAKE VALVE

(a) Apply a sufficient coat of engine oil to the tip area of the intake valve shown in the illustration.

(b) Install the valve, compression spring and spring retainer to the cylinder head.
NOTICE:
Install the same parts in the same combination to the original locations.

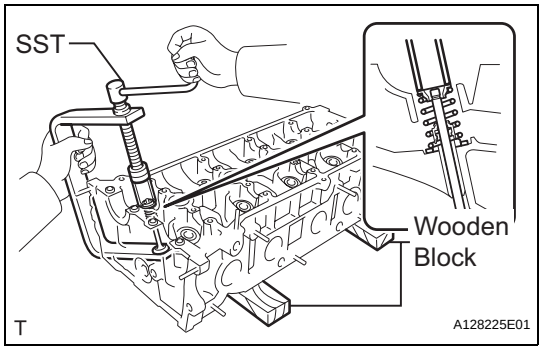

(c) Using SST and wooden blocks, compress the spring and install the 2 retainer locks.
SST 09202-70020 (09202-00010)

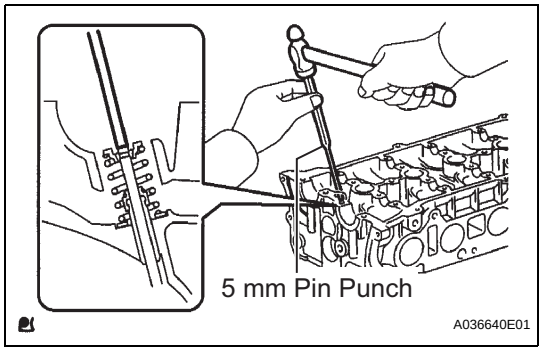

(d) Using a 5 mm pin punch and plastic hammer, lightly tap the valve stem tip to ensure a proper fit.
NOTICE:
Be careful not to damage the valve stem tip.

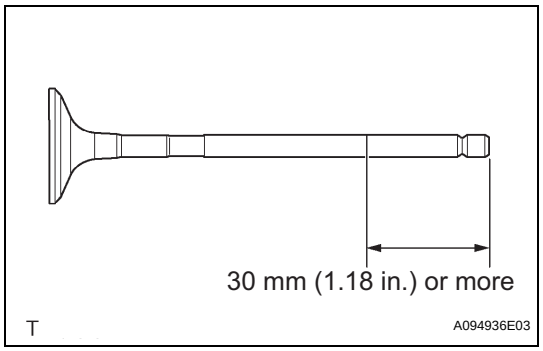

9. INSTALL EXHAUST VALVE

(a) Apply a sufficient coat of engine oil to the tip area of the exhaust valve shown in the illustration.

(b) Install the valve, compression spring and spring retainer to the cylinder head.
NOTICE:
Install the same parts in the same combination to the original locations.

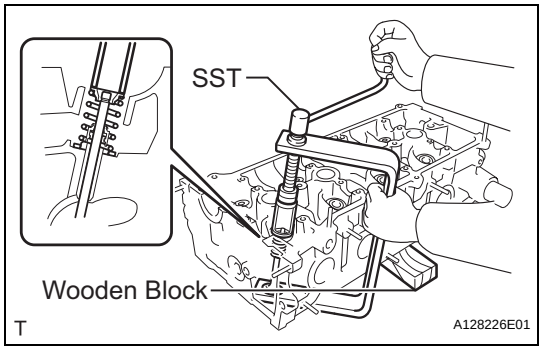

(c) Using SST and wooden blocks, compress the spring and install the 2 retainer locks.
SST 09202-70020 (09202-00010)

EM

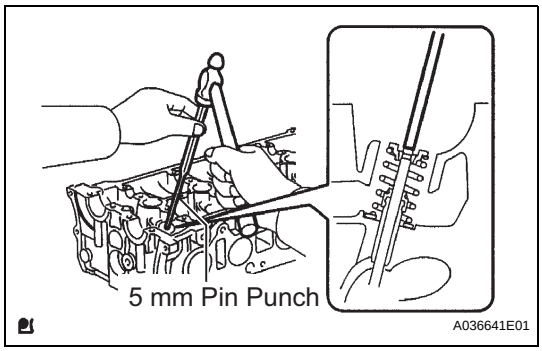

(d) Using a 5 mm pin punch and plastic hammer, lightly tap the valve stem tip to ensure a proper fit.
NOTICE:
Be careful not to damage the valve stem tip.

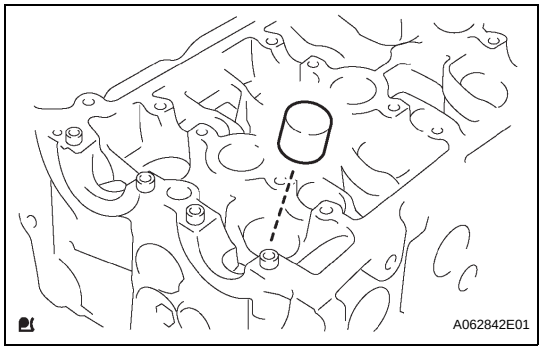

10. INSTALL VALVE LIFTER

(a) Assemble the valve lifter and the tip of the valve stem with a light coat of engine oil applied.
NOTICE:
Install the valve lifters in their original places.

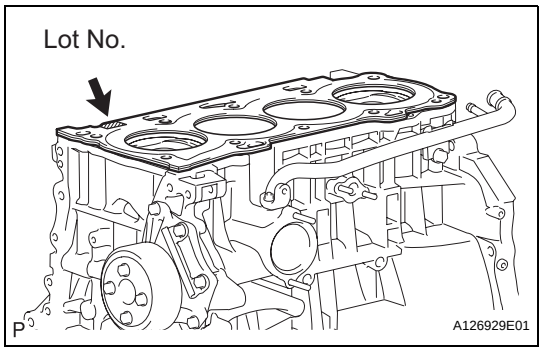

INSTALLATION

1. INSTALL CYLINDER HEAD GASKET

(a) Place a new gasket on the cylinder block surface with the Lot No. stamp facing upward.
NOTICE:
- **Remove any oil from the contact surface.**
- **Make sure that the gasket is installed in the correct direction.**

2. INSTALL CYLINDER HEAD SUB-ASSEMBLY

HINT:
The cylinder head bolts are tightened in 2 progressive steps.

(a) Apply a light coat of engine oil to the bolt threads and the area beneath the bolt heads that come in contact with the washers.

(b) Install the bolts and plate washers to the cylinder head.
NOTICE:
Do not drop the washers into the cylinder head.

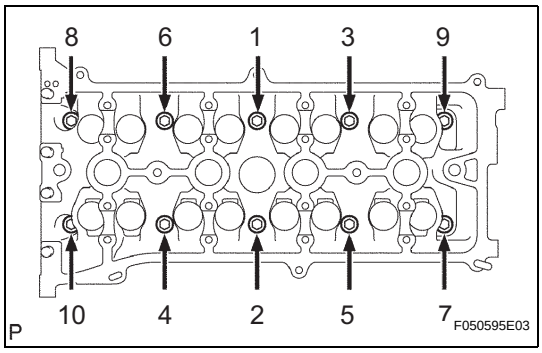

(c) Using several steps, uniformly install and tighten the 10 cylinder head set bolts and plate washers with a 10 mm bi-hexagon wrench in the order shown in the illustration.
Torque: 70 N*m (714 kgf*cm, 52 ft.*lbf)

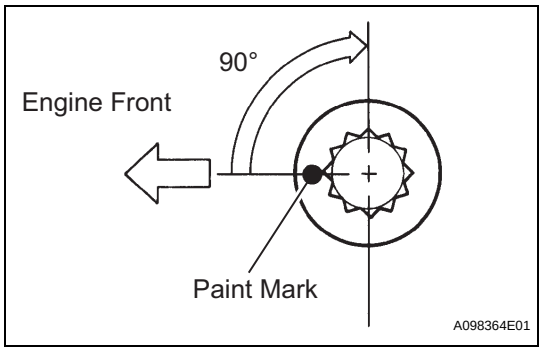

(d) Mark the front side of the cylinder head bolt with paint.
(e) Retighten the cylinder head bolts 90° in the sequence shown in the illustration.
(f) Check that the paint mark is now at a 90° angle to the front.

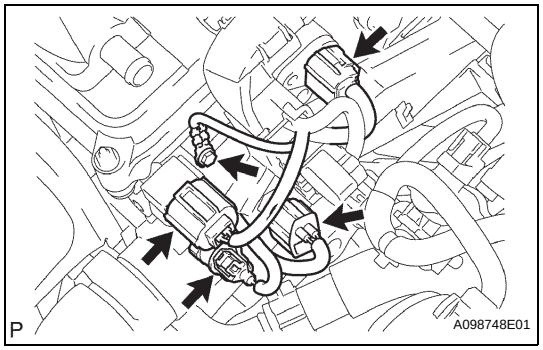

3. CONNECT ENGINE WIRE
(a) Connect the ground cable with the bolt.
Torque: 8.4 N*m (86 kgf*cm, 74 in.*lbf)
(b) Connect the camshaft position sensor connector.
(c) Connect the engine coolant temperature sensor connector.
(d) Connect the engine oil pressure switch connector.
(e) Connect the radio setting condenser connector.

4. CONNECT RADIATOR HOSE INLET (See page EM-118)

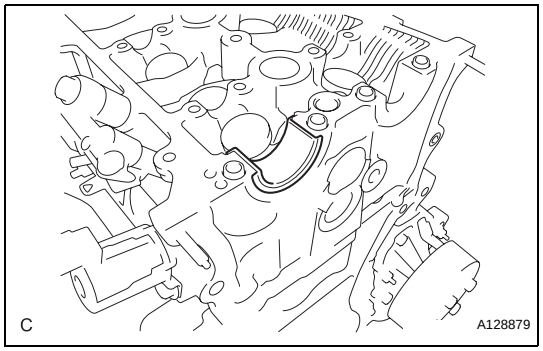

5. INSTALL NO. 2 CAMSHAFT BEARING
(a) Install the No. 2 camshaft bearing.

6. INSTALL CAMSHAFT TIMING OIL CONTROL VALVE ASSEMBLY (See page ES-406)

7. INSTALL CAMSHAFTS
(a) Apply a light coat of engine oil to the journal portion of the camshaft.

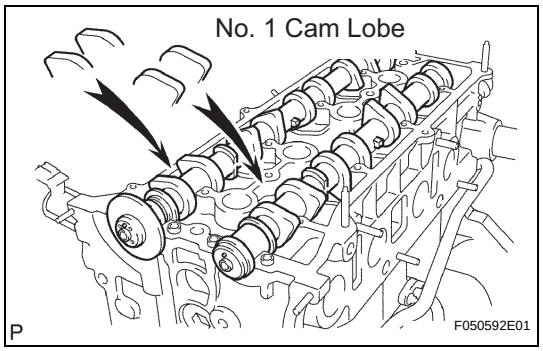

(b) Place the 2 camshafts on the cylinder head with the No. 1 cam lobes facing the directions shown in the illustration.

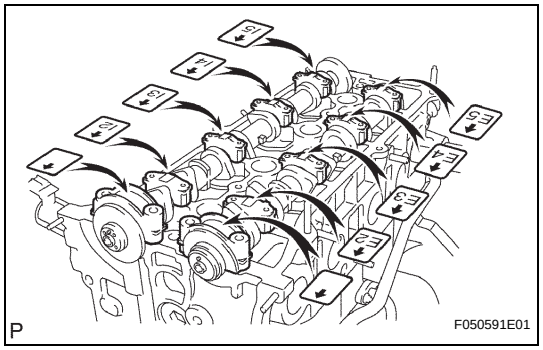

(c) Examine the front marks and numbers, and check that the order is as shown in the illustration. Then install the bearing caps onto the cylinder head.
(d) Apply a light coat of engine oil to the threads and under the heads of the bearing cap bolts.

EM

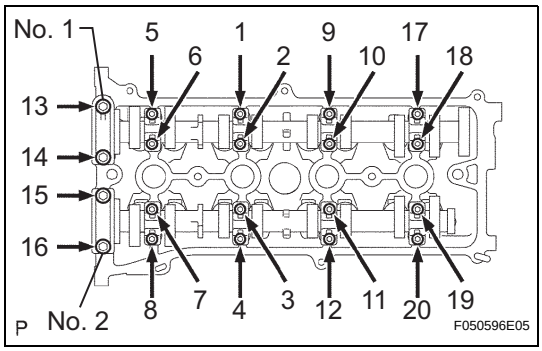

(e) Using several steps, uniformly tighten the 20 bearing cap bolts in the sequence shown in the illustration.
Torque: No. 1 and No. 2 bearing cap
30 N*m (301 kgf*cm, 22 ft.*lbf)
No. 3 bearing cap
9.0 N*m (92 kgf*cm, 80 in.*lbf)

8. **INSTALL CHAIN SUB-ASSEMBLY**
HINT:
See page EM-27.

9. **INSTALL EXHAUST MANIFOLD CONVERTER SUB-ASSEMBLY (See page EM-109)**

10. **INSTALL NO. 2 MANIFOLD STAY (See page EM-110)**

11. **INSTALL MANIFOLD STAY (See page EM-111)**

12. **INSTALL OIL LEVEL GAUGE GUIDE (See page EM-111)**

13. **INSTALL OIL LEVEL GAUGE SUB-ASSEMBLY**

14. **INSTALL GENERATOR ASSEMBLY (See page CH-19)**

15. **INSTALL V-RIBBED BELT (See page EM-6)**

16. **INSTALL NO. 2 ENGINE MOUNTING BRACKET RH (See page EM-118)**

17. **INSTALL ENGINE MOVING CONTROL ROD SUB-ASSEMBLY (See page EM-119)**

18. **INSTALL NO. 2 ENGINE MOUNTING STAY RH (See page EM-119)**

19. **INSTALL FRONT EXHAUST PIPE ASSEMBLY**
HINT:
See page EX-3.

20. **INSTALL NO. 1 INTAKE MANIFOLD INSULATOR (See page EM-111)**

21. **INSTALL INTAKE AIR CONTROL VALVE (For PZEV) (See page IT-7)**

22. **INSTALL INTAKE MANIFOLD (See page ES-425)**

23. **INSTALL FUEL DELIVERY PIPE WITH INJECTOR (See page FU-15)**

24. **CONNECT FUEL TUBE SUB-ASSEMBLY (See page FU-16)**

25. **INSTALL THROTTLE BODY ASSEMBLY (See page ES-418)**

26. **INSTALL BATTERY (See page EM-119)**

27. **REMOVE AIR CLEANER CASE SUB-ASSEMBLY (See page EM-120)**

28. **INSTALL AIR CLEANER CAP SUB-ASSEMBLY (See page ES-419)**

29. **INSTALL AIR CLEANER INLET ASSEMBLY (See page EM-120)**
30. **INSTALL COWL TOP PANEL OUTER SUB-ASSEMBLY (See page ES-426)**
31. **INSTALL WINDSHIELD WIPER LINK ASSEMBLY**
    HINT:
    See page WW-13.
32. **CONNECT CABLE FROM NEGATIVE BATTERY TERMINAL (See page EM-120)**
33. **ADD ENGINE OIL**
34. **CHECK FOR FUEL LEAKS (See page FU-9)**
35. **ADD COOLANT (See page CO-5)**
36. **CHECK FOR ENGINE COOLANT LEAKS (See page CO-1)**
37. **CHECK FOR ENGINE OIL LEAKS**
38. **CHECK FOR EXHAUST GAS LEAKS**
39. **INSPECT IGNITION TIMING (See page EM-1)**
40. **INSPECT IDLE SPEED (See page EM-2)**
41. **INSPECT COMPRESSION (See page EM-3)**
42. **INSPECT CO/HC (See page EM-3)**
43. **INSTALL NO. 1 ENGINE COVER SUB-ASSEMBLY (See page EM-121)**
44. **INSTALL FRONT FENDER APRON SEAL RH**
45. **INSTALL ENGINE UNDER COVER LH**
46. **INSTALL ENGINE UNDER COVER RH**
47. **INSTALL FRONT WHEEL RH (See page EM-120)**

ENGINE FRONT OIL SEAL

COMPONENTS

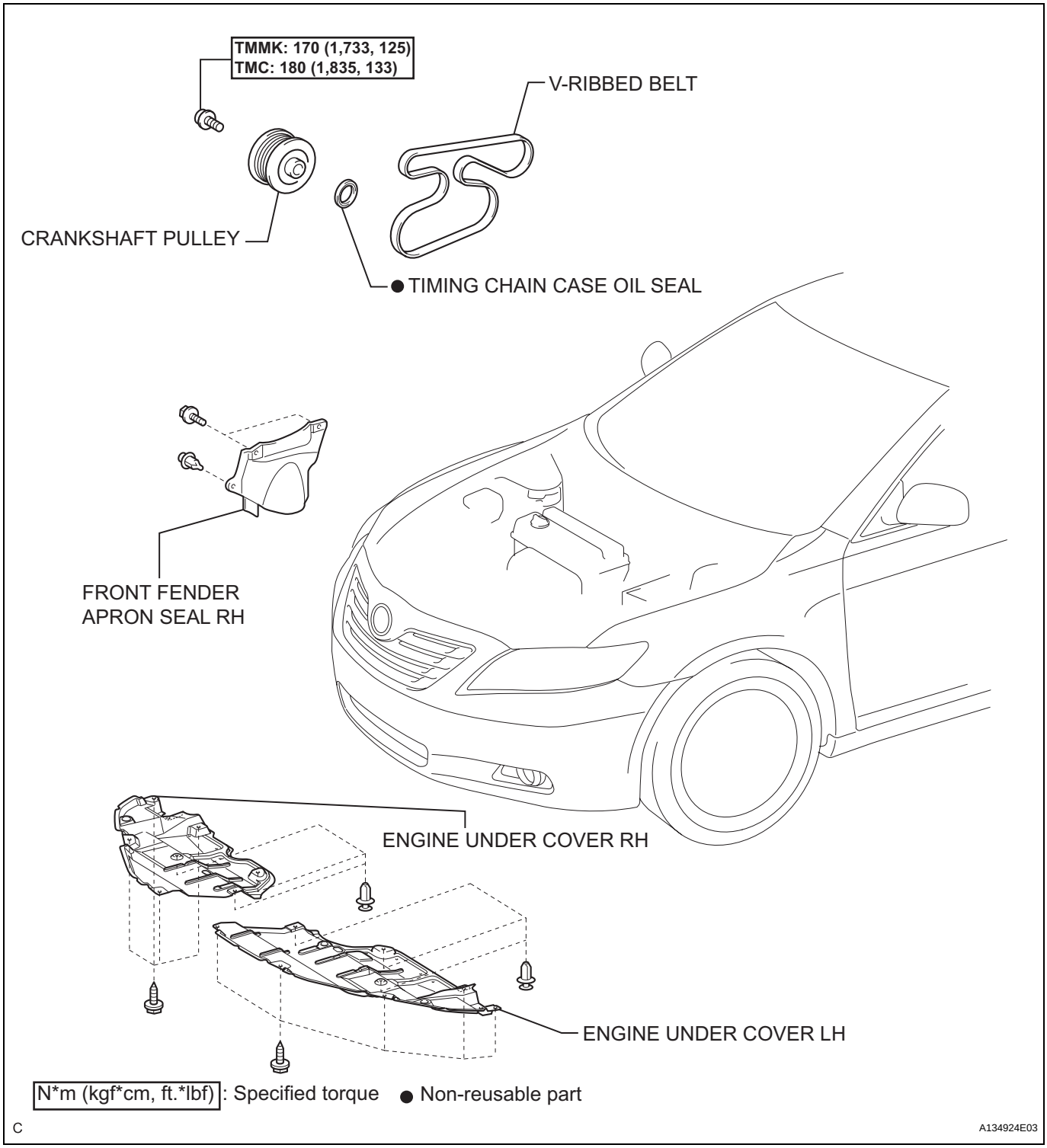

EM

REMOVAL

1. **REMOVE FRONT WHEEL RH**
2. **REMOVE FRONT FENDER APRON SEAL RH**
3. **REMOVE ENGINE UNDER COVER LH**
4. **REMOVE ENGINE UNDER COVER RH**
5. **REMOVE V-RIBBED BELT (See page EM-6)**
6. **REMOVE CRANKSHAFT PULLEY**

(a) TMMK made:

(1) Using SST, fix the pulley in place and loosen the pulley bolt.

SST 09960-10010 (09962-01000, 09963-01000)

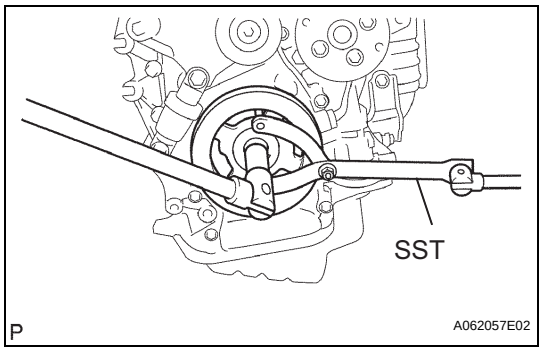

(2) Using SST, remove the pulley bolt and pulley.

SST 09950-40011 (09951-04010, 09952-04010, 09953-04030, 09955-04041, 09957-04010, 09954-04010, 91111-51014)

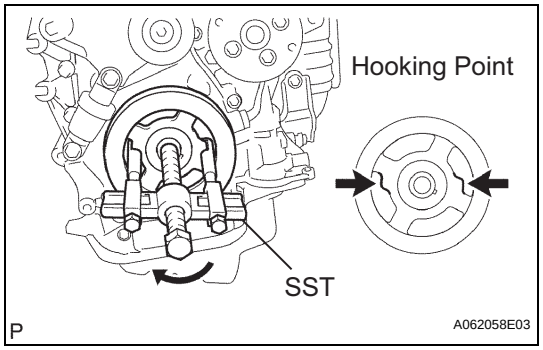

(b) TMC made:

(1) Using SST, fix the pulley in place and loosen the pulley bolt.

SST 09213-54015 (91651-60855), 09330-00021

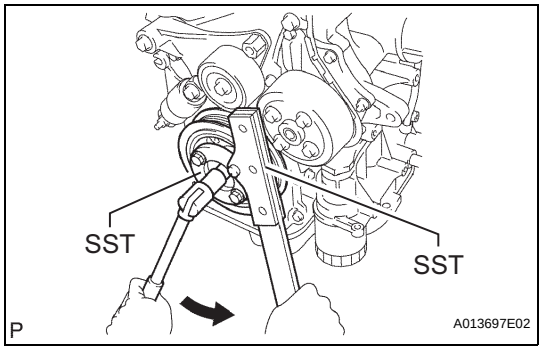

(2) Using SST, remove the pulley bolt and pulley.

SST 09950-50013 (09951-05010, 09952-05010, 09953-05020, 09954-05021), 09950-40011 (09957-04010)

HINT:
If necessary, remove the pulley and pulley bolt using SST.

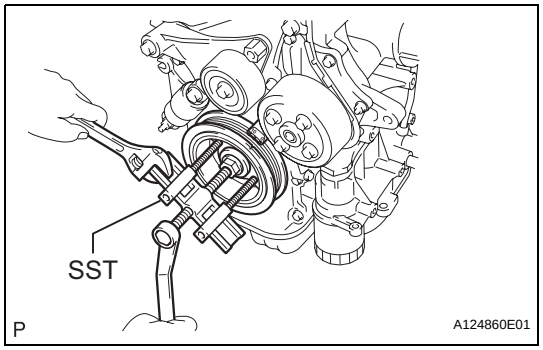

EM

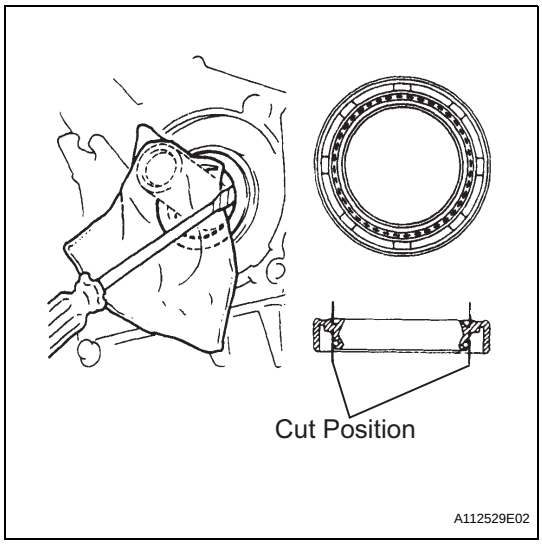

7. REMOVE TIMING CHAIN CASE OIL SEAL

(a) Using a knife, cut off the oil seal lip.

(b) Using a screwdriver with the tip taped, pry out the oil seal.

NOTICE:

After the removal, check the crankshaft for damage. If it is damaged, smooth the surface with 400-grit sandpaper.

INSTALLATION

1. INSTALL TIMING CHAIN CASE OIL SEAL

(a) Apply MP grease to a new oil seal lip.
NOTICE:
Keep the lip free from foreign matter.

(b) Using SST and a hammer, tap in the oil seal until its surface is flush with the rear oil seal retainer edge.
SST 09223-22010
NOTICE:
Wipe off extra grease from the crankshaft.

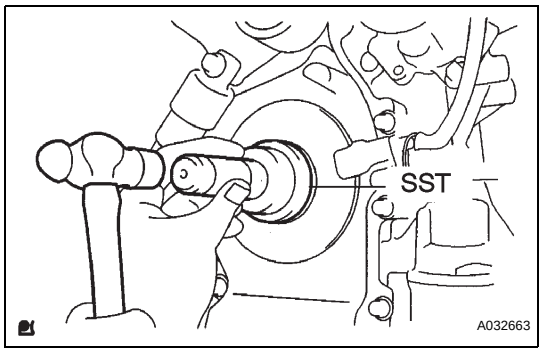

2. INSTALL CRANKSHAFT PULLEY

(a) TMMK made:

(1) Align the pulley set key with the key groove of the pulley.

(2) Using SST, fix the pulley in place and tighten the bolt.
SST 09960-10010 (09962-01000, 09963-01000)
Torque: 170 N*m (1,733 kgf*cm, 125 ft.*lbf)

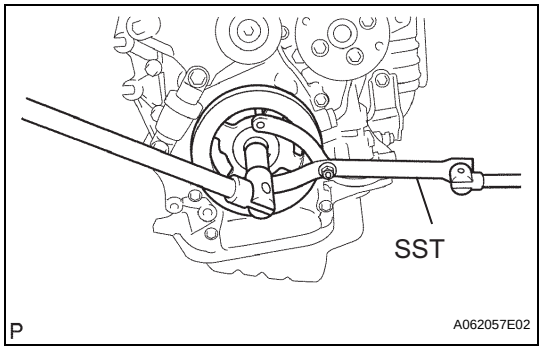

(b) TMC made:

(1) Align the pulley set key with the key groove of the pulley.

(2) Using SST, fix the pulley in place and tighten the bolt.
SST 09213-54015 (91651-60855), 09330-00021
Torque: 180 N*m (1,835 kgf*cm, 133 ft.*lbf)

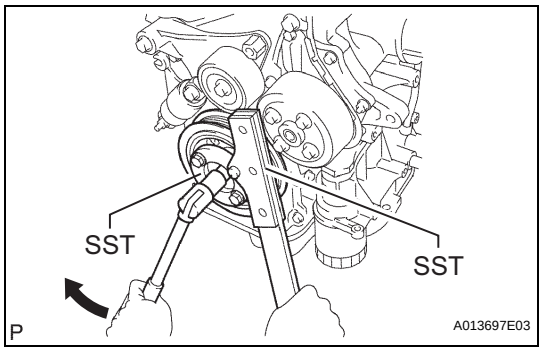

3. INSTALL V-RIBBED BELT (See page EM-6)

4. INSTALL ENGINE UNDER COVER LH

5. INSTALL ENGINE UNDER COVER RH

6. INSTALL FRONT FENDER APRON SEAL RH

7. INSTALL FRONT WHEEL RH

8. CHECK FOR ENGINE OIL LEAKS

EM

ENGINE REAR OIL SEAL

COMPONENTS

M/T:

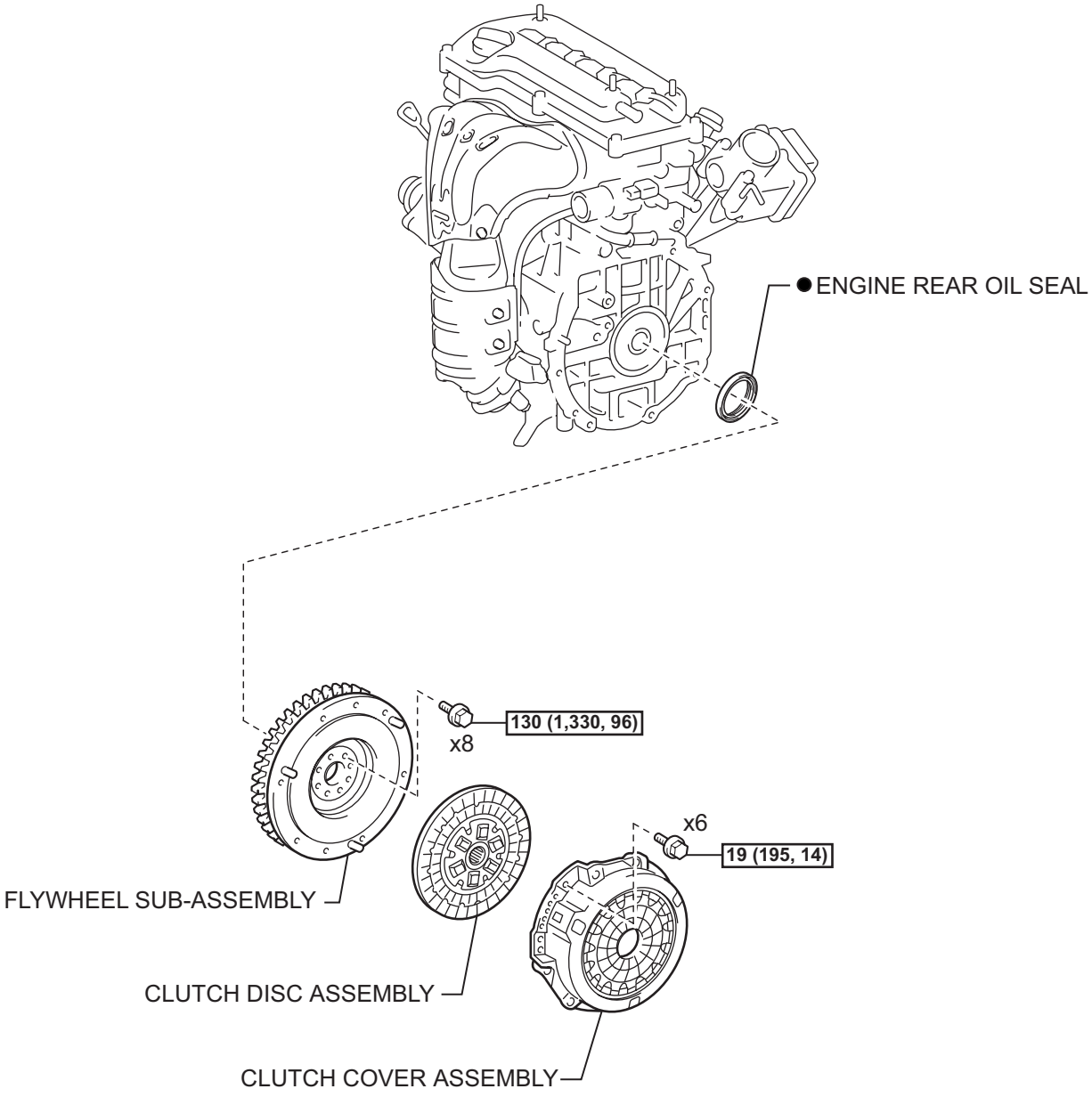

N*m (kgf*cm, ft.*lbf) : Specified torque

● Non-reusable part

A136909E01

EM

EM

A/T:

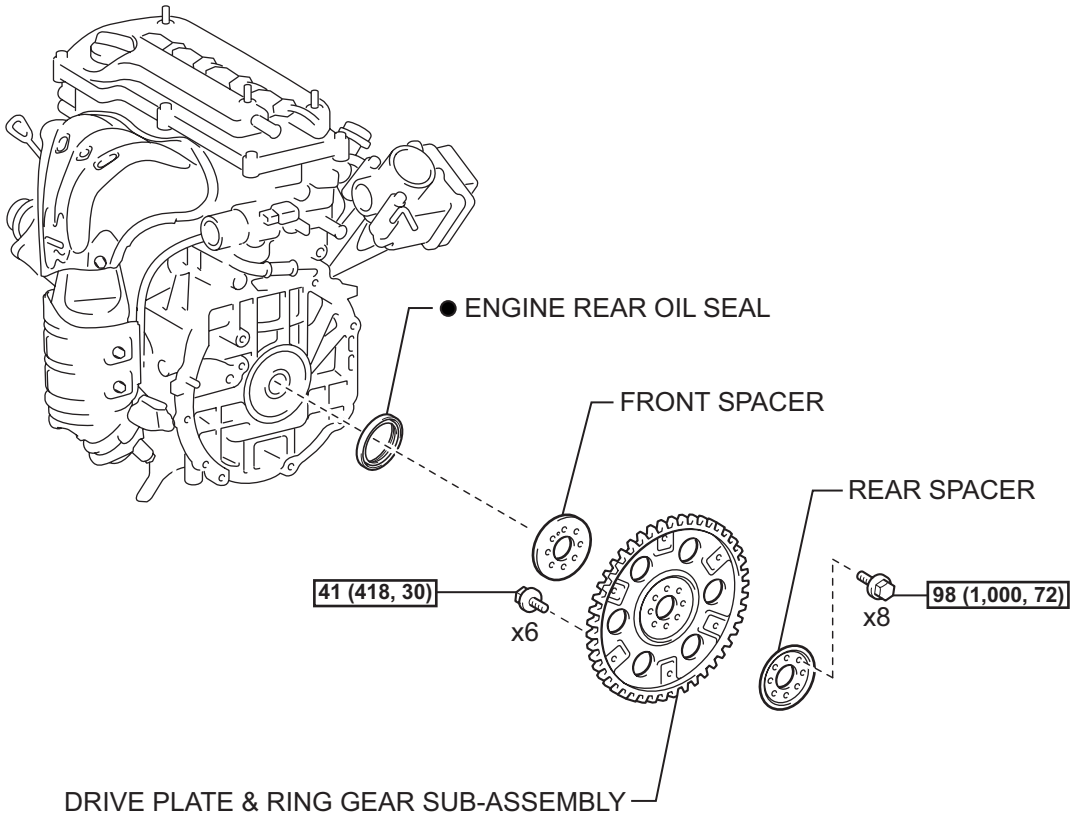

N*m (kgf*cm, ft.*lbf) : Specified torque

● Non-reusable part

A136910E01

REMOVAL

1. **SEPARATE AUTOMATIC TRANSAXLE ASSEMBLY (for Automatic Transaxle)**
   HINT:
   See page AX-162.

2. **SEPARATE MANUAL TRANSAXLE ASSEMBLY (for Manual Transaxle)**
   HINT:
   See page MX-24.

3. **REMOVE DRIVE PLATE & RING GEAR SUB-ASSEMBLY (for Automatic Transaxle)**
   (a) TMMK made:
   (1) Using SST, hold the crankshaft.
   SST 09960-10010 (09962-01000, 09963-01000)

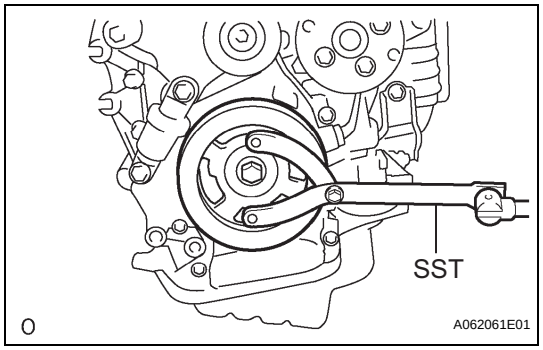

   (b) TMC made:
   (1) Using SST, hold the crankshaft.
   SST 09213-54015 (91651-60855), 09330-00021

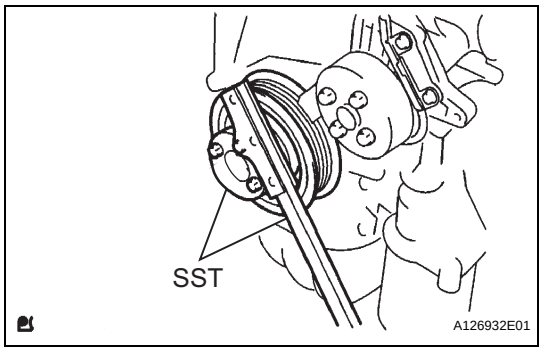

   (c) Remove the 8 bolts, rear spacer, drive plate and front spacer.

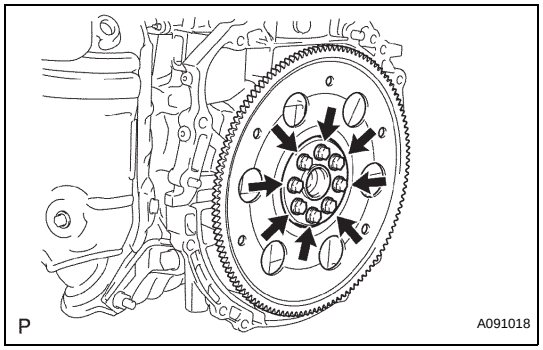

4. **REMOVE CLUTCH COVER ASSEMBLY (for Manual Transaxle) (See page CL-32)**

5. **REMOVE CLUTCH DISC ASSEMBLY (for Manual Transaxle) (See page CL-32)**

6. **REMOVE FLYWHEEL SUB-ASSEMBLY (for Manual Transaxle)**
   (a) TMMK made:
   (1) Using SST, hold the crankshaft.
   SST 09960-10010 (09962-01000, 09963-01000)

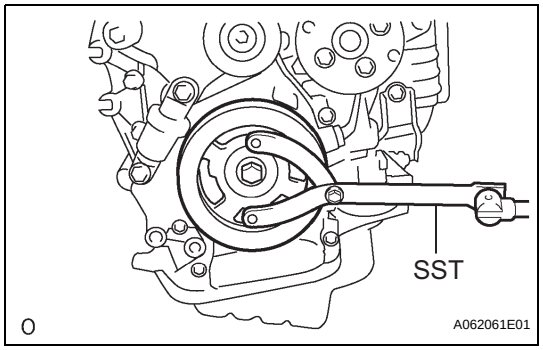

EM

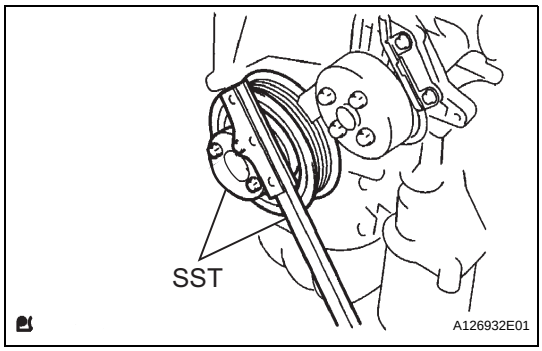

(b) TMC made:
(1) Using SST, hold the crankshaft.
SST 09213-54015 (91651-60855), 09330-00021

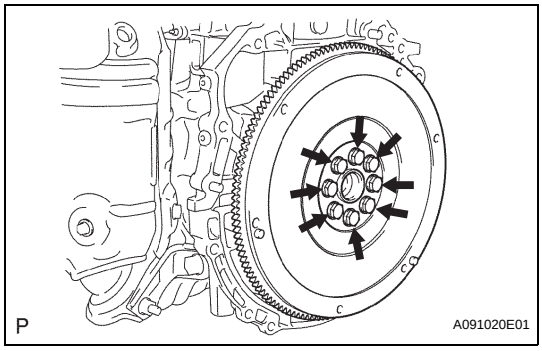

(c) Remove the 8 bolts and flywheel.

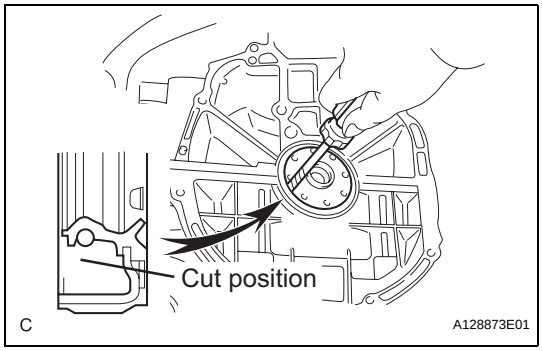

7. REMOVE ENGINE REAR OIL SEAL
(a) Using a knife, cut through the oil seal lip.
(b) Using a screwdriver with its tip taped, pry out the oil seal.
NOTICE:
After the removal, check the crankshaft for damage. If it is damaged, smooth the surface with 400-grit sandpaper.

INSTALLATION

1. INSTALL ENGINE REAR OIL SEAL

(a) Apply MP grease to a new oil seal lip.
NOTICE:
Keep the lip free from foreign matter.

(b) Using SST and a hammer, tap in the oil seal until its surface is flush with the rear oil seal retainer edge.
SST 09223-15030, 09950-70010 (09951-07100)
NOTICE:
Wipe off extra grease from the crankshaft.

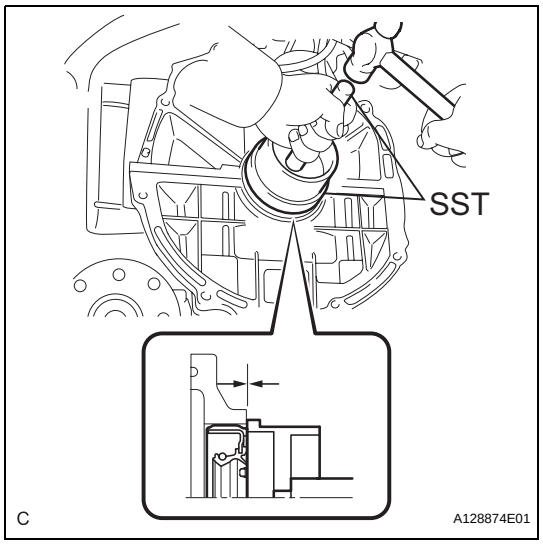

2. INSTALL FLYWHEEL SUB-ASSEMBLY (for Manual Transaxle)

(a) TMMK made:
(1) Using SST, hold the crankshaft.
SST 09960-10010 (09962-01000, 09963-01000)

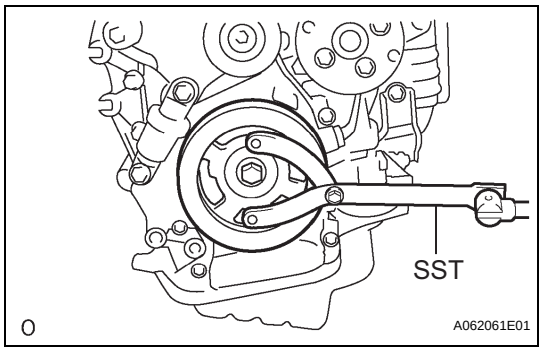

(b) TMC made:
(1) Using SST, hold the crankshaft.
SST 09213-54015 (91651-60855), 09330-00021

(c) Clean the bolt and the bolt hole.

(d) Apply adhesive to 2 or 3 threads of the bolt end.
Adhesive:
Part No. 08833-00070, THREE BOND or equivalent

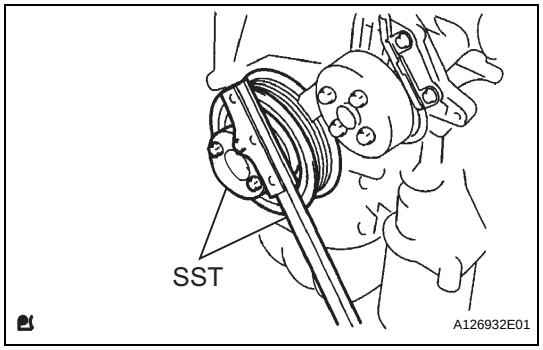

(e) Install the flywheel with the 8 bolts. Uniformly tighten the 8 bolts in the sequence shown in the illustration.
Torque: 130 N*m (1,330 kgf*cm, 96 ft.*lbf)

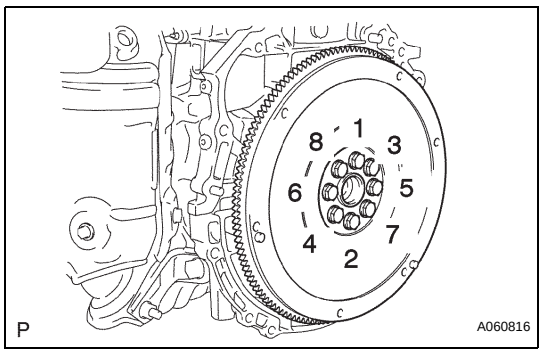

3. INSTALL CLUTCH DISC ASSEMBLY (for Manual Transaxle) (See page CL-34)

4. INSTALL CLUTCH COVER ASSEMBLY (for Manual Transaxle) (See page CL-34)

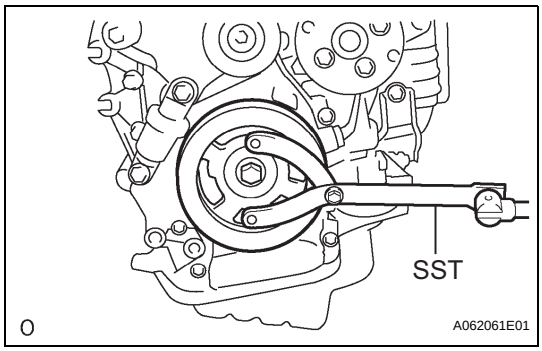

5. INSTALL DRIVE PLATE & RING GEAR SUB-ASSEMBLY (for Automatic Transaxle)

(a) TMMK made:

(1) Using SST, hold the crankshaft.

SST 09960-10010 (09962-01000, 09963-01000)

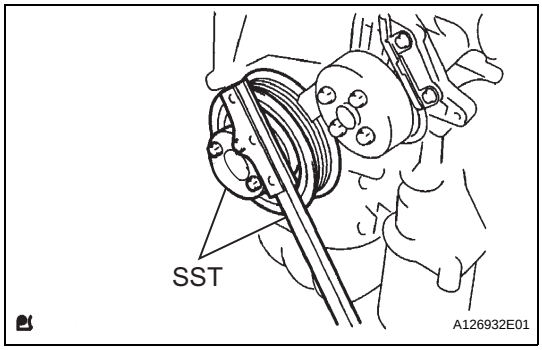

(b) TMC made:

(1) Using SST, hold the crankshaft.

SST 09213-54015 (91651-60855), 09330-00021

(c) Clean the bolt and the bolt hole.

(d) Apply adhesive to 2 or 3 threads of the bolt end.

Adhesive:

Part No. 08833-00070, THREE BOND or equivalent

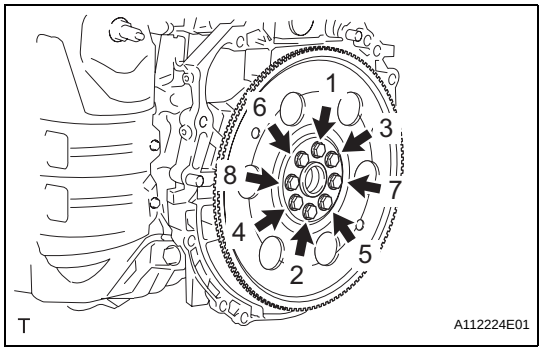

(e) Install the front spacer, drive plate and rear spacer with the 8 bolts. Uniformly tighten the 8 bolts in the sequence shown in the illustration.

Torque: 98 N*m (1,000 kgf*cm, 72 ft.*lbf)

6. INSTALL MANUAL TRANSAXLE ASSEMBLY (for Manual Transaxle)

HINT:

See page MX-27.

7. INSTALL AUTOMATIC TRANSAXLE ASSEMBLY (for Automatic Transaxle)

HINT:

See page AX-168.

EM

ENGINE ASSEMBLY

COMPONENTS

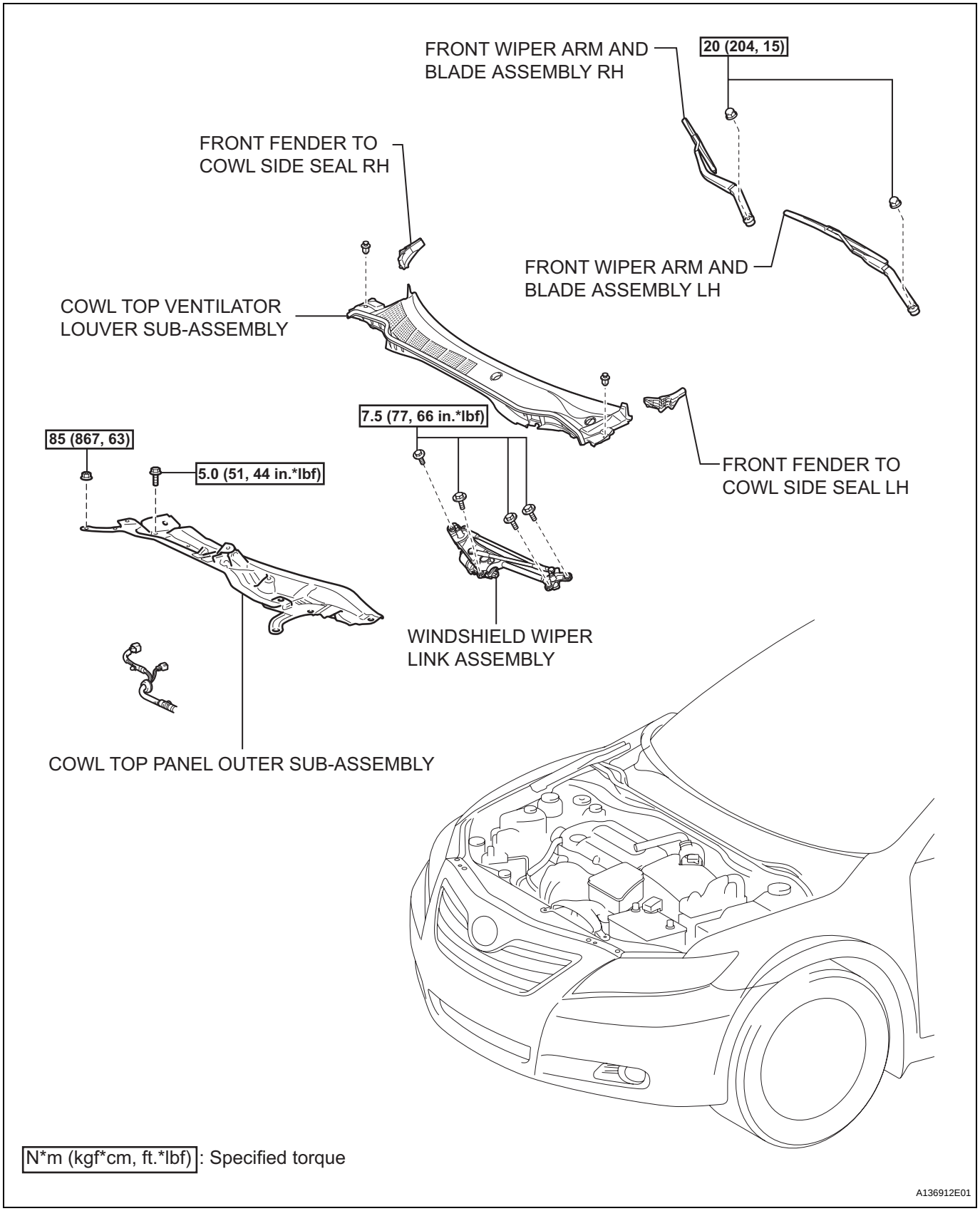

EM

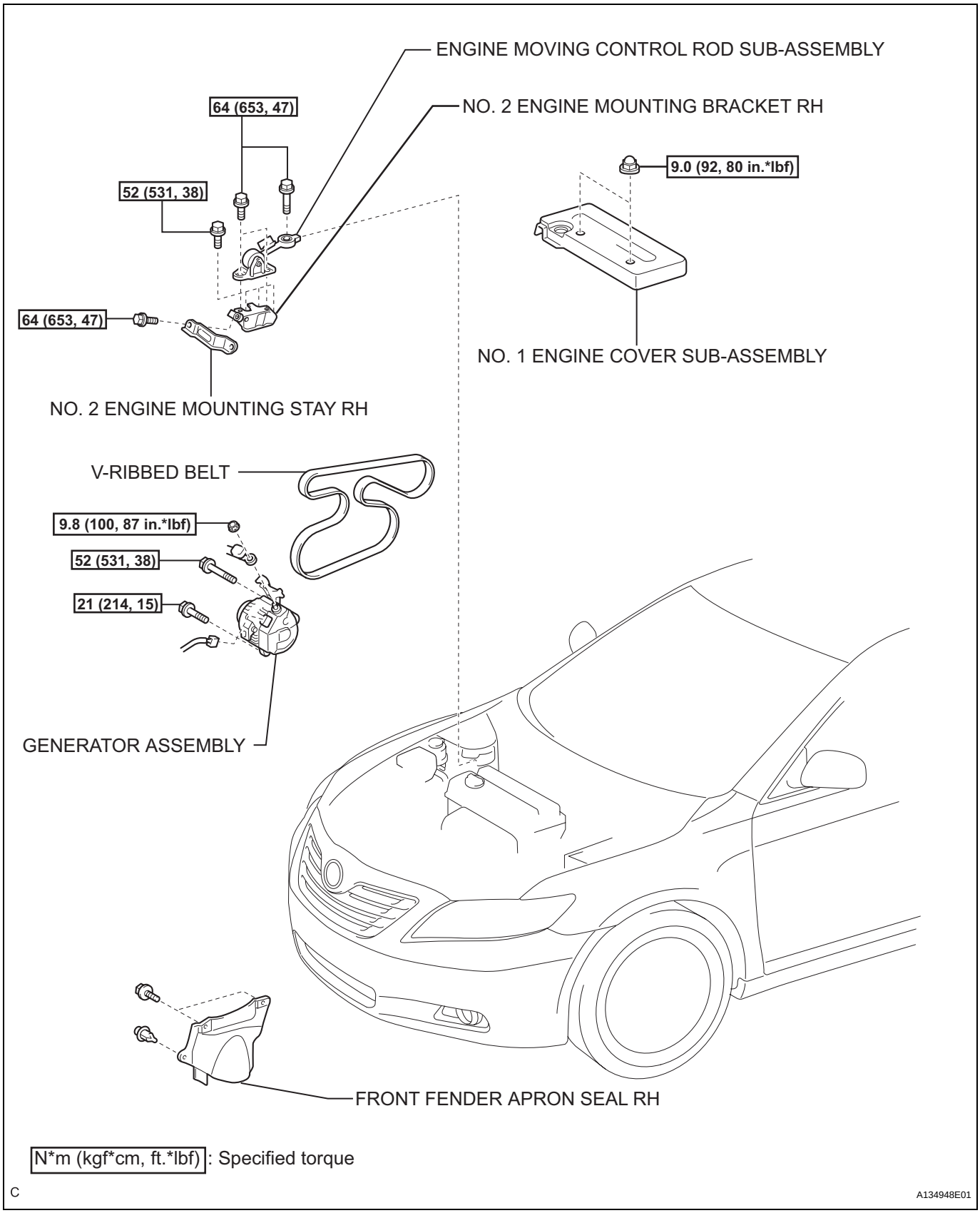
ENGINE MOVING CONTROL ROD SUB-ASSEMBLY
NO. 2 ENGINE MOUNTING BRACKET RH
64 (653, 47)
52 (531, 38)
64 (653, 47)
9.0 (92, 80 in.*lbf)
NO. 1 ENGINE COVER SUB-ASSEMBLY
NO. 2 ENGINE MOUNTING STAY RH
V-RIBBED BELT
9.8 (100, 87 in.*lbf)
52 (531, 38)
21 (214, 15)
GENERATOR ASSEMBLY
FRONT FENDER APRON SEAL RH
N*m (kgf*cm, ft.*lbf): Specified torque
C
A134948E01

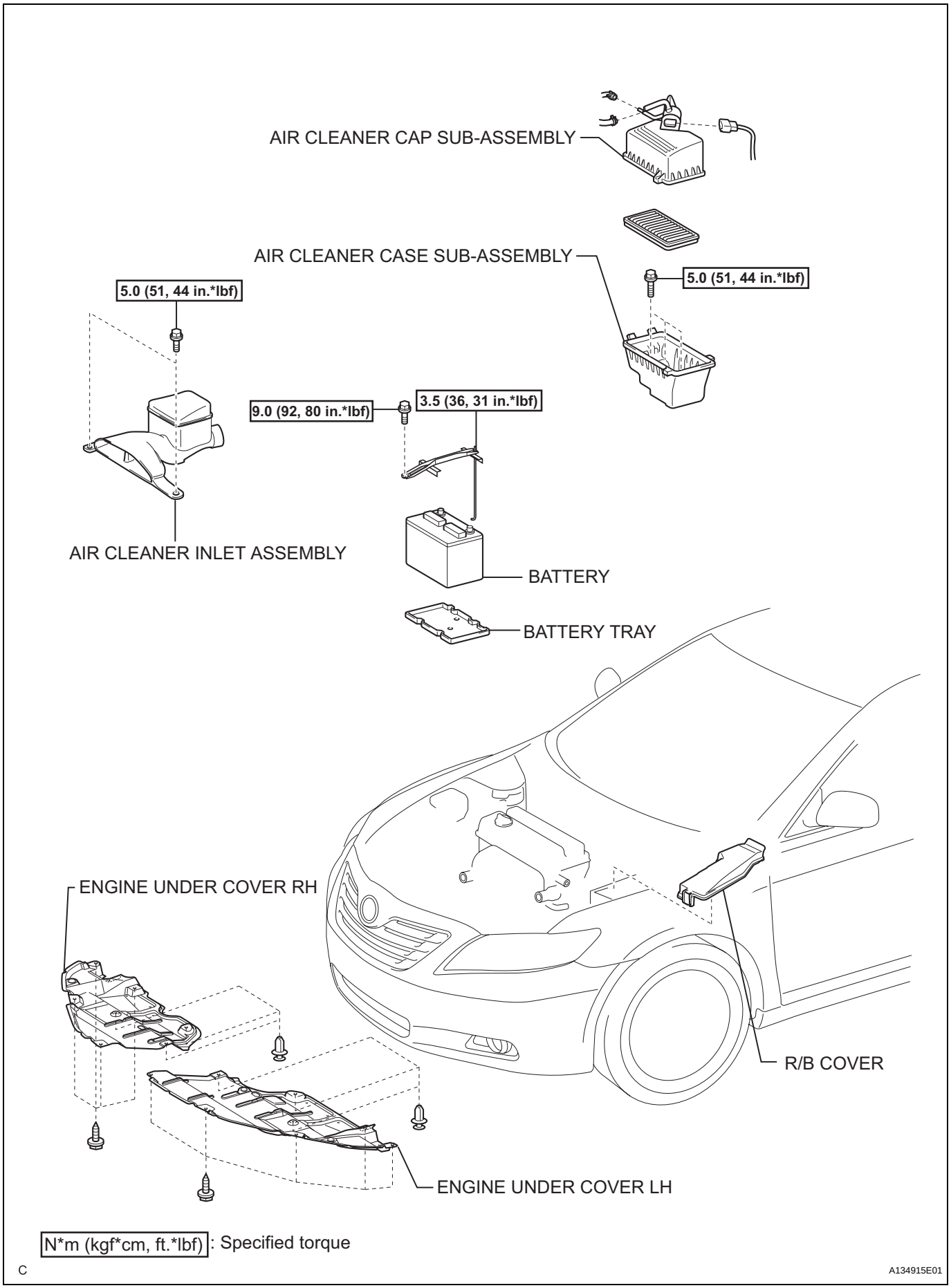
AIR CLEANER CAP SUB-ASSEMBLY
AIR CLEANER CASE SUB-ASSEMBLY
5.0 (51, 44 in.*lbf)
5.0 (51, 44 in.*lbf)
9.0 (92, 80 in.*lbf)
3.5 (36, 31 in.*lbf)
AIR CLEANER INLET ASSEMBLY
BATTERY
BATTERY TRAY
ENGINE UNDER COVER RH
R/B COVER
ENGINE UNDER COVER LH
N*m (kgf*cm, ft.*lbf): Specified torque
C
A134915E01

EM

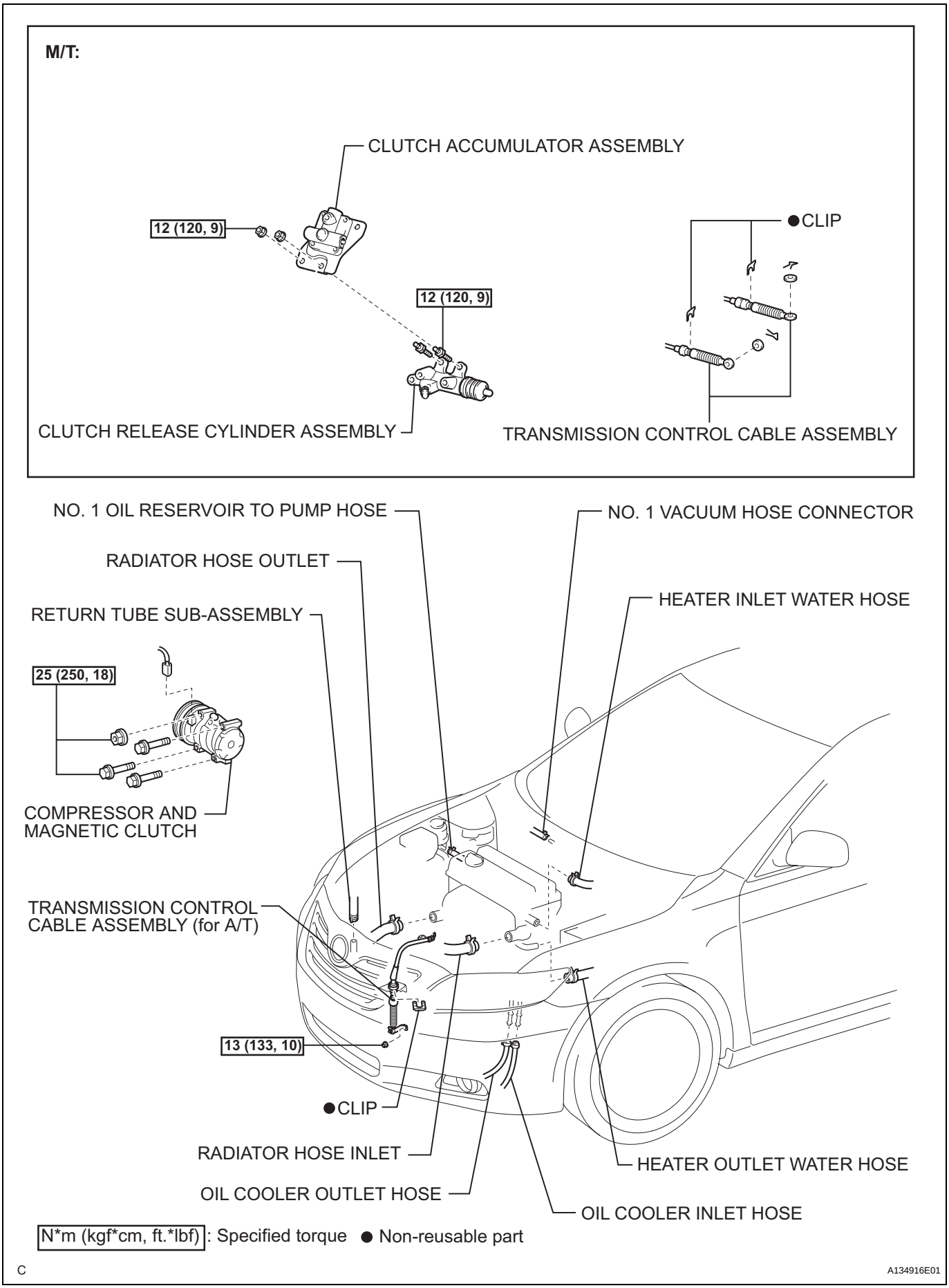
M/T:
CLUTCH ACCUMULATOR ASSEMBLY
12 (120, 9)
12 (120, 9)
●CLIP
CLUTCH RELEASE CYLINDER ASSEMBLY
TRANSMISSION CONTROL CABLE ASSEMBLY
NO. 1 OIL RESERVOIR TO PUMP HOSE
NO. 1 VACUUM HOSE CONNECTOR
RADIATOR HOSE OUTLET
HEATER INLET WATER HOSE
RETURN TUBE SUB-ASSEMBLY
25 (250, 18)
COMPRESSOR AND MAGNETIC CLUTCH
TRANSMISSION CONTROL CABLE ASSEMBLY (for A/T)
13 (133, 10)
●CLIP
RADIATOR HOSE INLET
HEATER OUTLET WATER HOSE
OIL COOLER OUTLET HOSE
OIL COOLER INLET HOSE
N*m (kgf*cm, ft.*lbf): Specified torque ● Non-reusable part
C
A134916E01

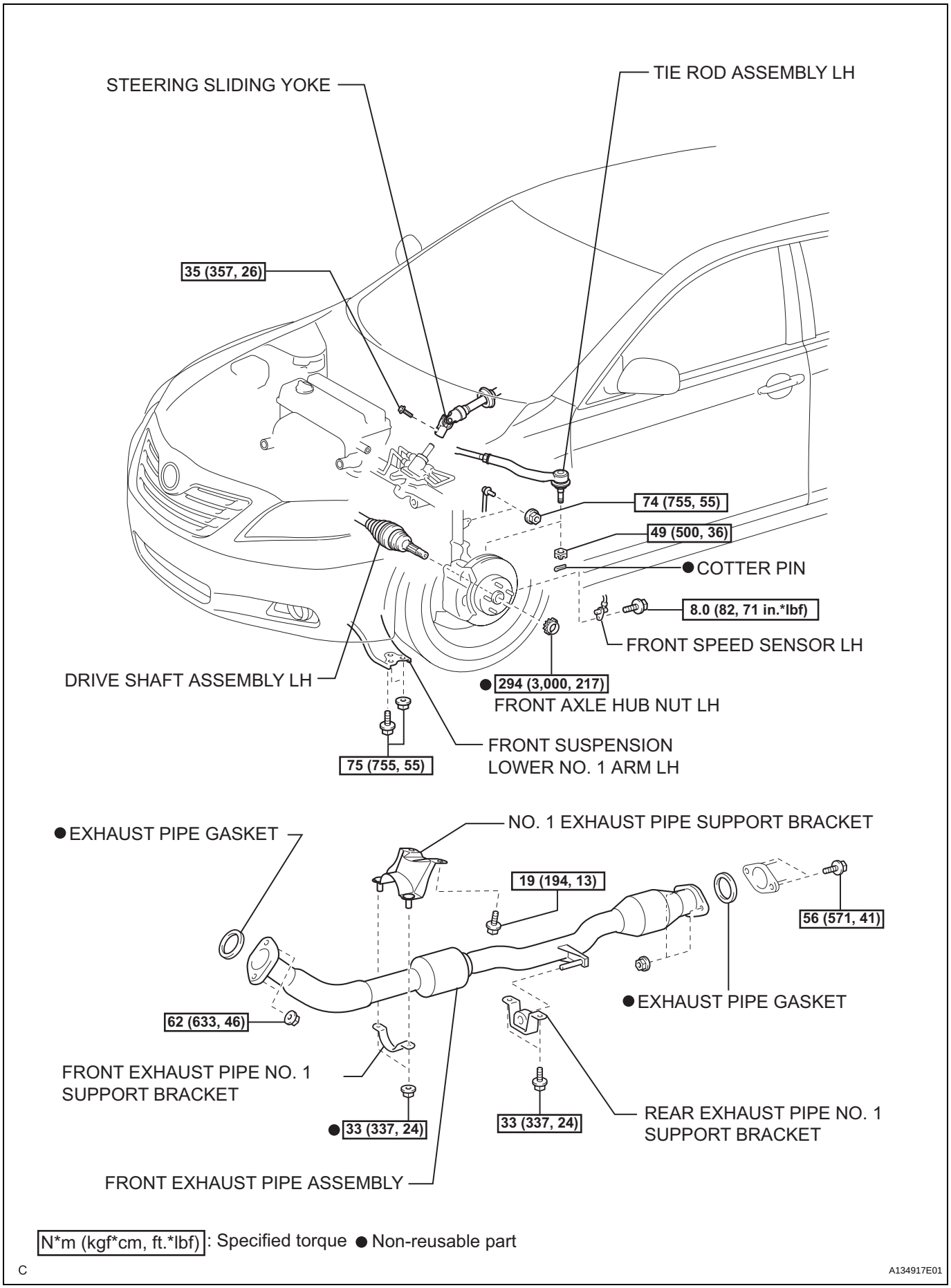
STEERING SLIDING YOKE
TIE ROD ASSEMBLY LH
35 (357, 26)
74 (755, 55)
49 (500, 36)
● COTTER PIN
8.0 (82, 71 in.*lbf)
FRONT SPEED SENSOR LH
DRIVE SHAFT ASSEMBLY LH
● 294 (3,000, 217)
FRONT AXLE HUB NUT LH
FRONT SUSPENSION
LOWER NO. 1 ARM LH
75 (755, 55)
● EXHAUST PIPE GASKET
NO. 1 EXHAUST PIPE SUPPORT BRACKET
19 (194, 13)
56 (571, 41)
● EXHAUST PIPE GASKET
62 (633, 46)
FRONT EXHAUST PIPE NO. 1
SUPPORT BRACKET
● 33 (337, 24)
33 (337, 24)
REAR EXHAUST PIPE NO. 1
SUPPORT BRACKET
FRONT EXHAUST PIPE ASSEMBLY
N*m (kgf*cm, ft.*lbf): Specified torque ● Non-reusable part
C
A134917E01

EM

A/T:

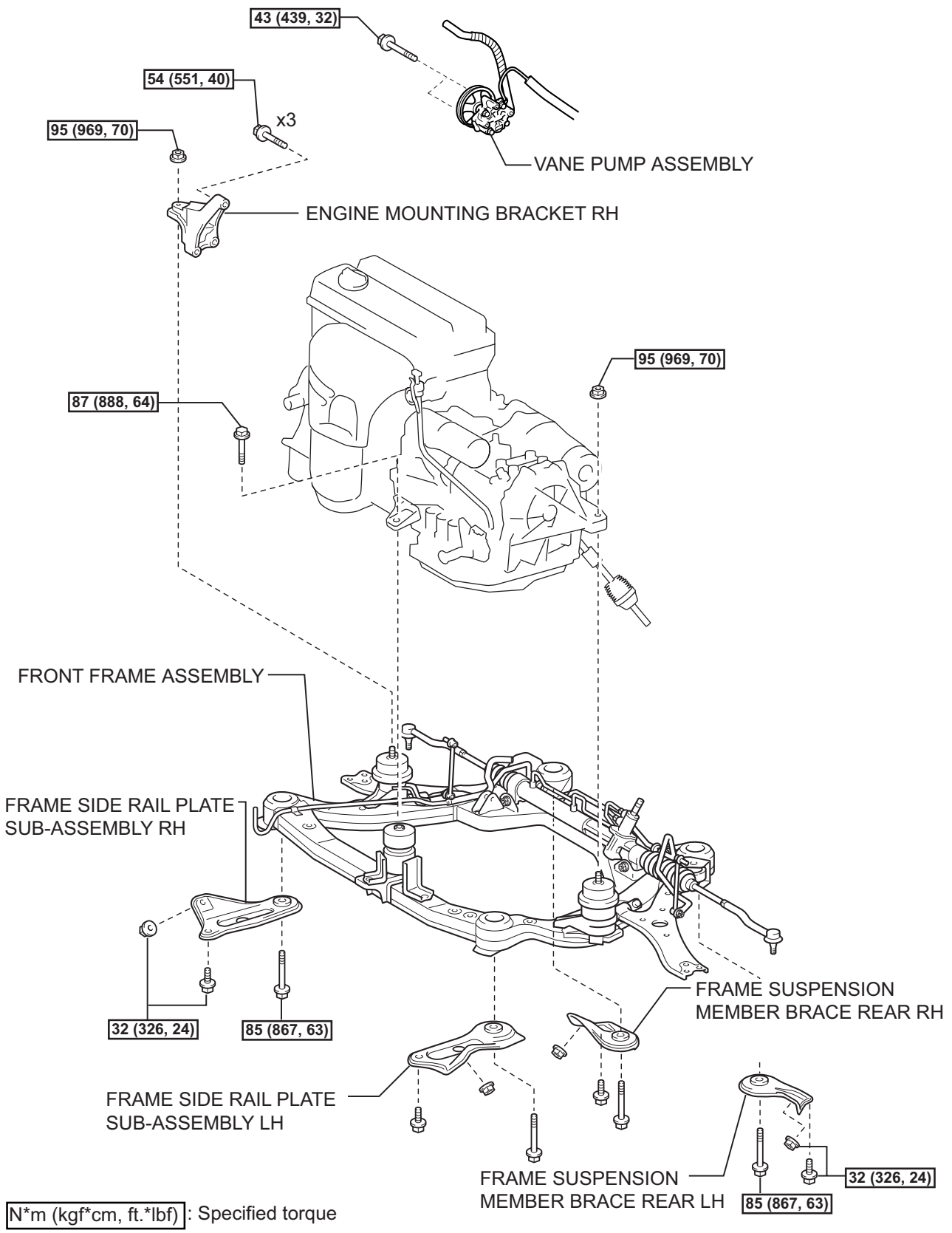

N*m (kgf*cm, ft.*lbf) : Specified torque

C

A138330E01

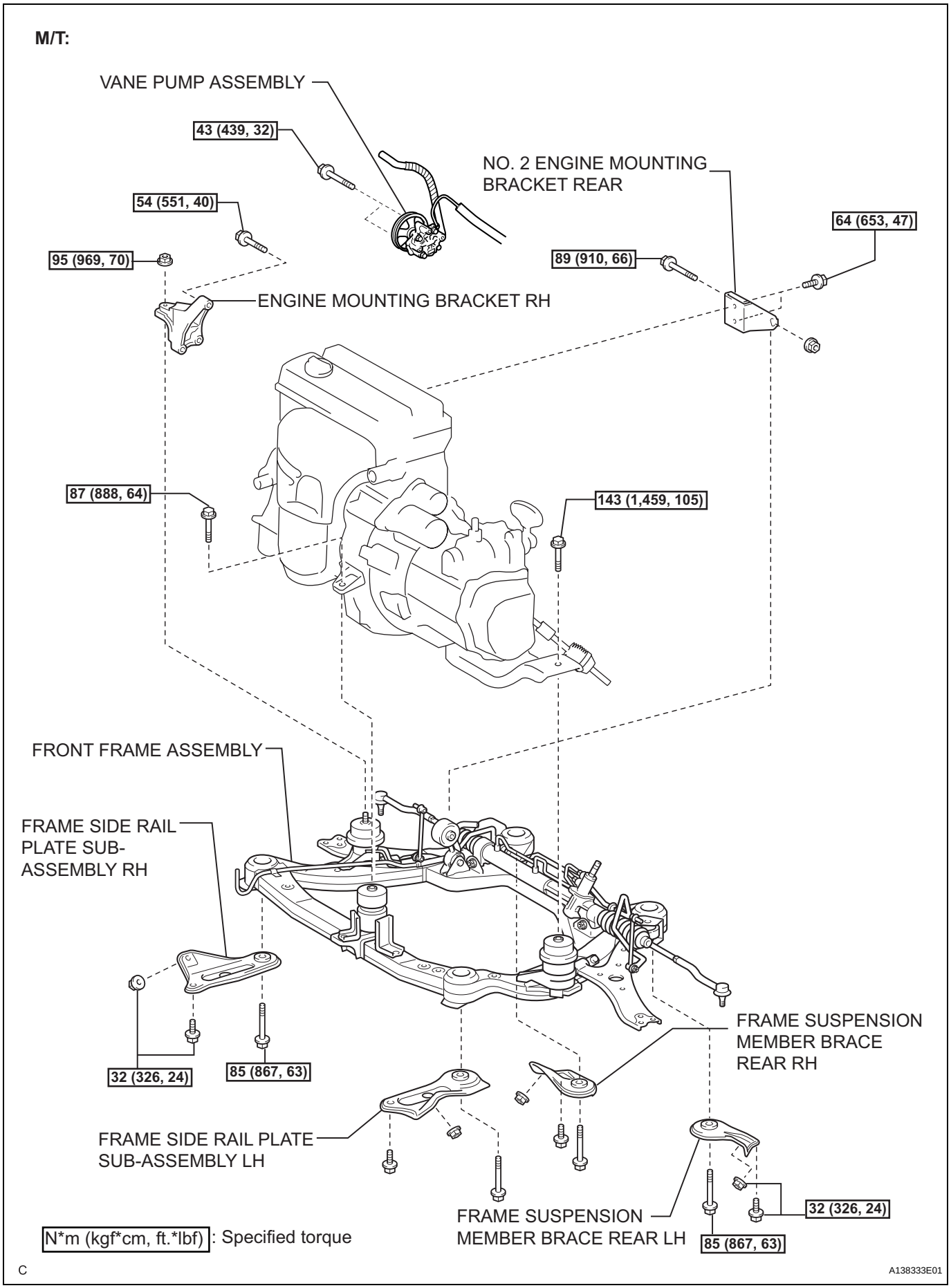
M/T:
VANE PUMP ASSEMBLY
43 (439, 32)
NO. 2 ENGINE MOUNTING BRACKET REAR
54 (551, 40)
64 (653, 47)
95 (969, 70)
89 (910, 66)
ENGINE MOUNTING BRACKET RH
87 (888, 64)
143 (1,459, 105)
FRONT FRAME ASSEMBLY
FRAME SIDE RAIL PLATE SUB-ASSEMBLY RH
FRAME SUSPENSION MEMBER BRACE REAR RH
32 (326, 24)
85 (867, 63)
FRAME SIDE RAIL PLATE SUB-ASSEMBLY LH
FRAME SUSPENSION MEMBER BRACE REAR LH
32 (326, 24)
85 (867, 63)
N*m (kgf*cm, ft.*lbf): Specified torque
C
A138333E01

EM

A/T:

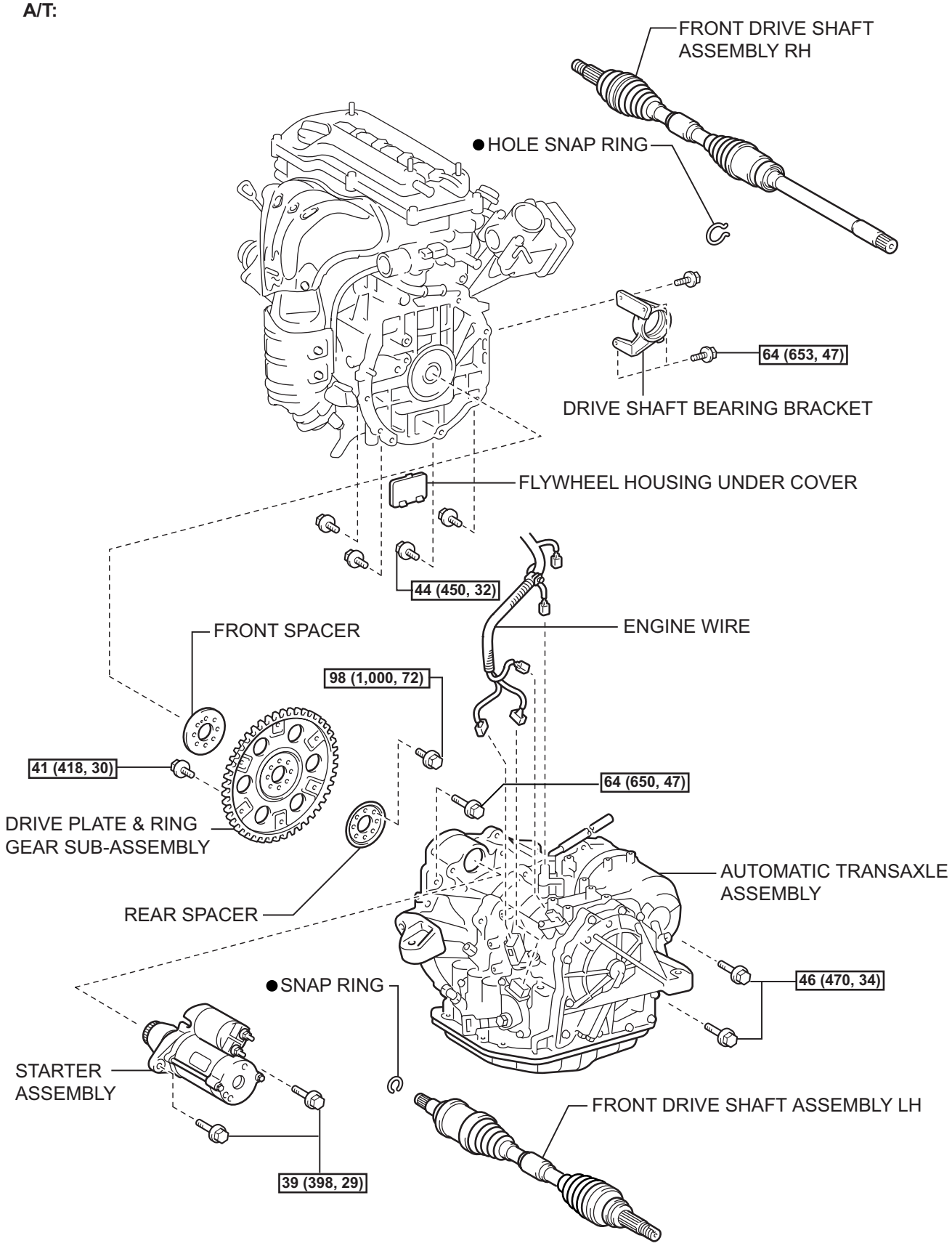

N*m (kgf*cm, ft.*lbf) : Specified torque ● Non-reusable part

O

A139203E01

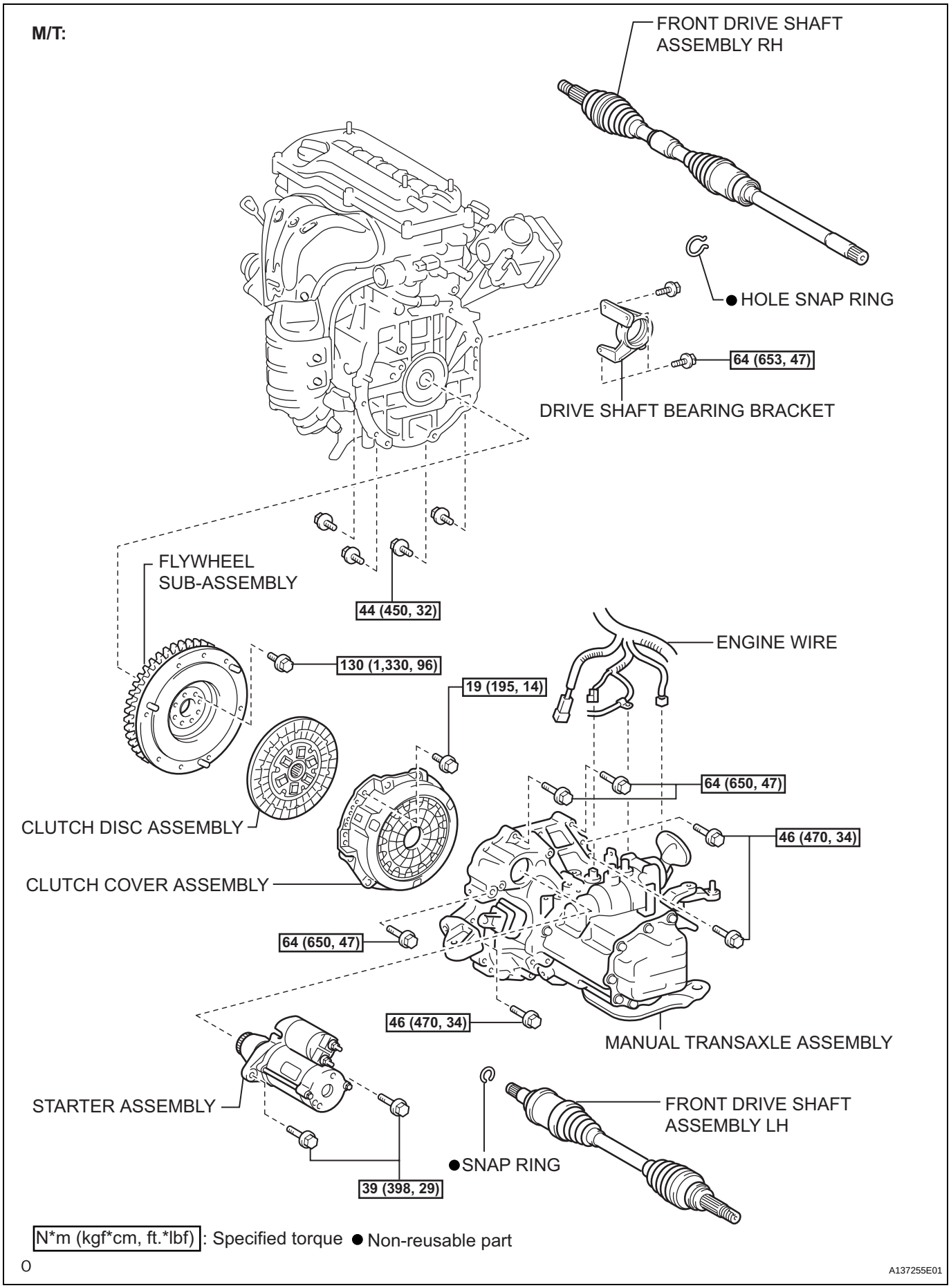
M/T:
FRONT DRIVE SHAFT ASSEMBLY RH
● HOLE SNAP RING
64 (653, 47)
DRIVE SHAFT BEARING BRACKET
FLYWHEEL SUB-ASSEMBLY
44 (450, 32)
130 (1,330, 96)
19 (195, 14)
ENGINE WIRE
64 (650, 47)
CLUTCH DISC ASSEMBLY
46 (470, 34)
CLUTCH COVER ASSEMBLY
64 (650, 47)
46 (470, 34)
MANUAL TRANSAXLE ASSEMBLY
STARTER ASSEMBLY
FRONT DRIVE SHAFT ASSEMBLY LH
●SNAP RING
39 (398, 29)
N*m (kgf*cm, ft.*lbf): Specified torque ● Non-reusable part
O
A137255E01

EM

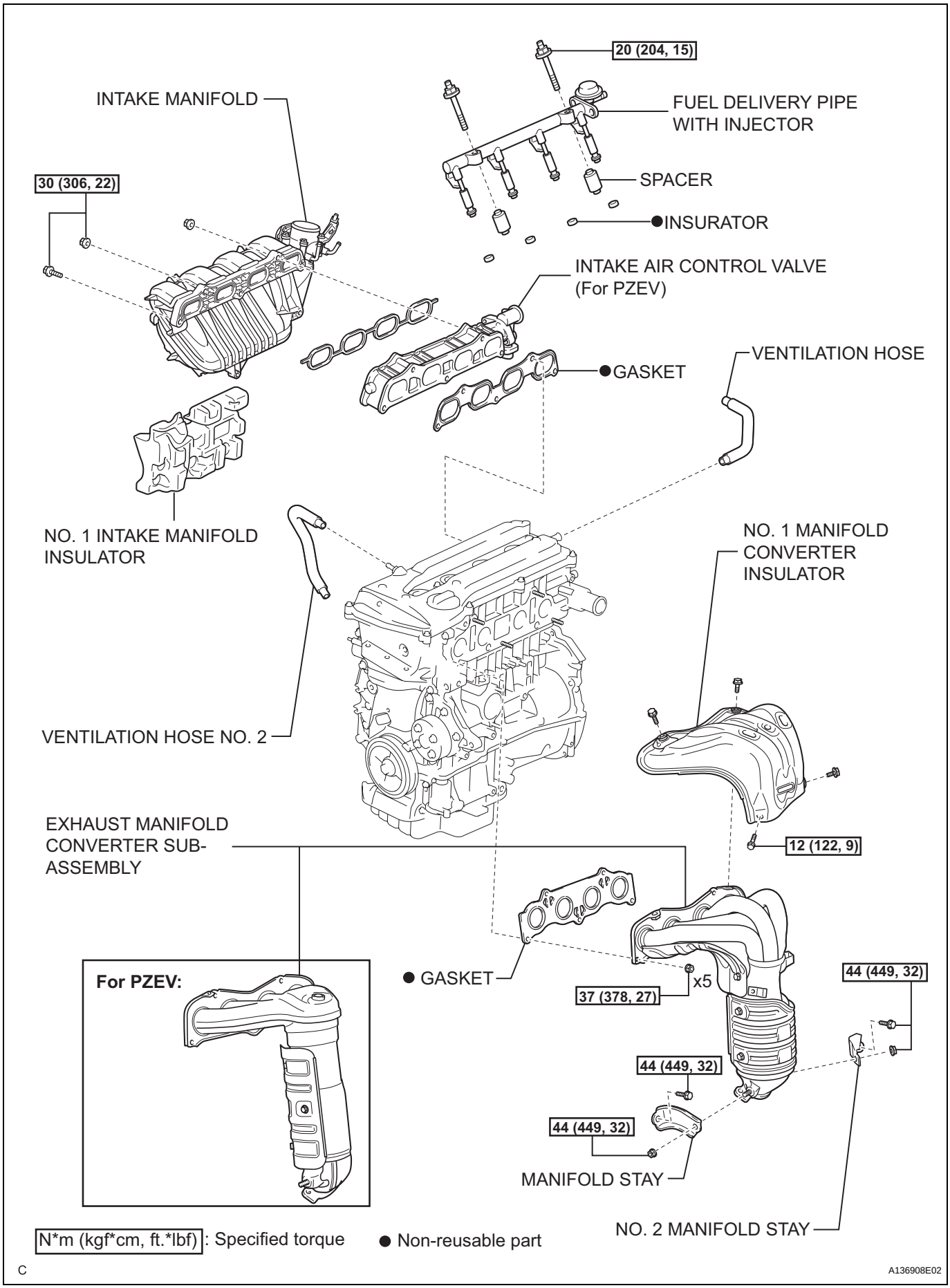
20 (204, 15)
INTAKE MANIFOLD
FUEL DELIVERY PIPE WITH INJECTOR
30 (306, 22)
SPACER
●INSURATOR
INTAKE AIR CONTROL VALVE (For PZEV)
VENTILATION HOSE
●GASKET
NO. 1 INTAKE MANIFOLD INSULATOR
NO. 1 MANIFOLD CONVERTER INSULATOR
VENTILATION HOSE NO. 2
EXHAUST MANIFOLD CONVERTER SUB-ASSEMBLY
12 (122, 9)
For PZEV:
● GASKET
37 (378, 27)
x5
44 (449, 32)
44 (449, 32)
44 (449, 32)
MANIFOLD STAY
NO. 2 MANIFOLD STAY
N*m (kgf*cm, ft.*lbf): Specified torque
● Non-reusable part
C
A136908E02

EM

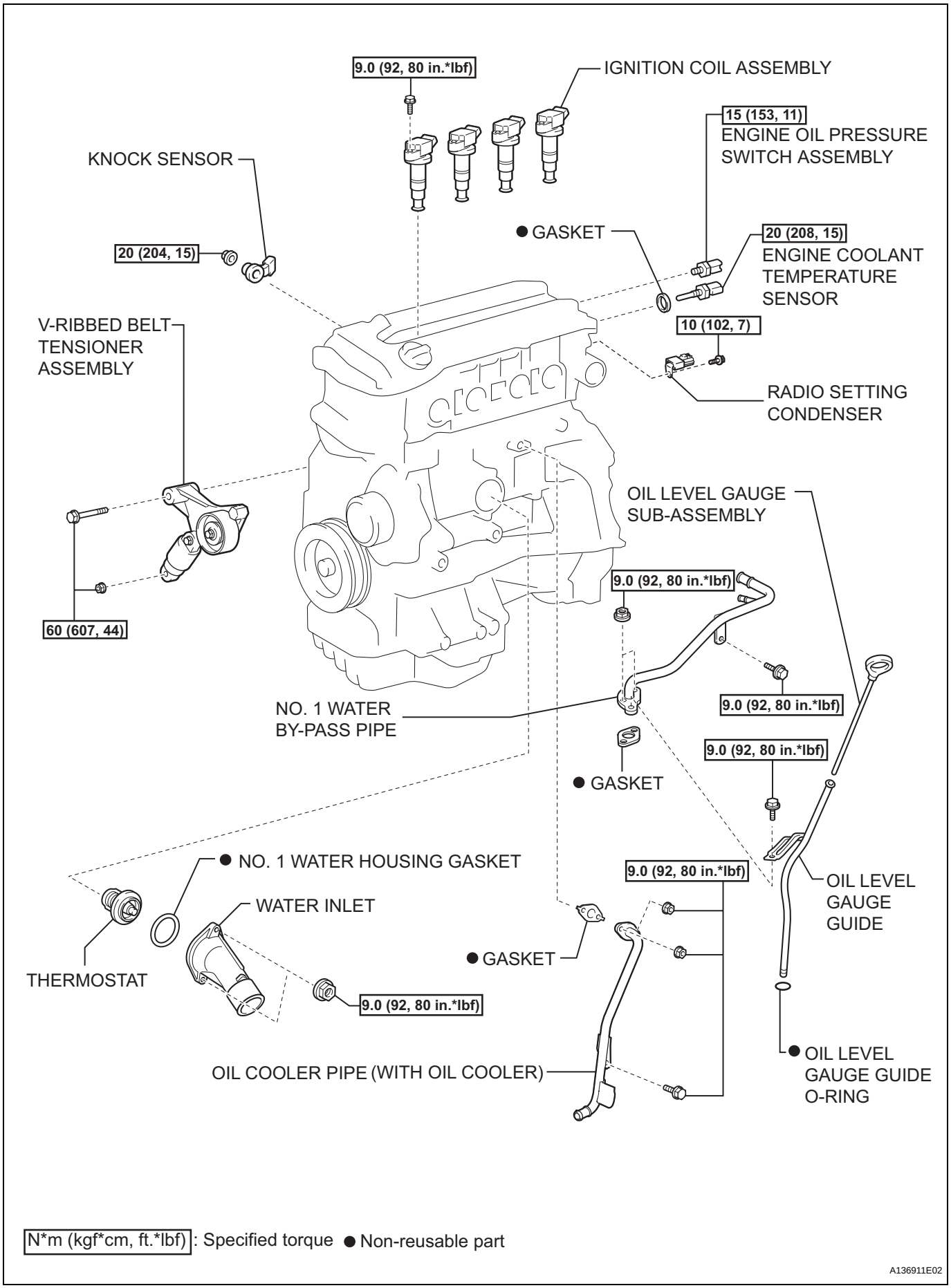
9.0 (92, 80 in.*lbf)
IGNITION COIL ASSEMBLY
15 (153, 11)
ENGINE OIL PRESSURE SWITCH ASSEMBLY
KNOCK SENSOR
● GASKET
20 (208, 15)
ENGINE COOLANT TEMPERATURE SENSOR
20 (204, 15)
V-RIBBED BELT TENSIONER ASSEMBLY
10 (102, 7)
RADIO SETTING CONDENSER
OIL LEVEL GAUGE SUB-ASSEMBLY
9.0 (92, 80 in.*lbf)
60 (607, 44)
9.0 (92, 80 in.*lbf)
NO. 1 WATER BY-PASS PIPE
9.0 (92, 80 in.*lbf)
● GASKET
● NO. 1 WATER HOUSING GASKET
9.0 (92, 80 in.*lbf)
OIL LEVEL GAUGE GUIDE
WATER INLET
● GASKET
THERMOSTAT
9.0 (92, 80 in.*lbf)
● OIL LEVEL GAUGE GUIDE O-RING
OIL COOLER PIPE (WITH OIL COOLER)
N*m (kgf*cm, ft.*lbf): Specified torque ● Non-reusable part
A136911E02

EM

EM

REMOVAL

1. **DISCHARGE FUEL SYSTEM PRESSURE**
   HINT:
   See page FU-1.
2. **DISCONNECT CABLE FROM NEGATIVE BATTERY TERMINAL**
3. **PLACE FRONT WHEELS FACING STRAIGHT AHEAD**
4. **REMOVE FRONT WHEELS**
5. **REMOVE ENGINE UNDER COVER LH**
6. **REMOVE ENGINE UNDER COVER RH**
7. **REMOVE FRONT FENDER APRON SEAL RH**
8. **DRAIN ENGINE OIL (See page LU-4)**
9. **DRAIN ENGINE COOLANT (See page CO-5)**
10. **DRAIN AUTOMATIC TRANSAXLE FLUID (for Automatic Transaxle) (See page AX-162)**
11. **DRAIN MANUAL TRANSAXLE OIL (for Manual Transaxle) (See page MX-5)**
12. **DRAIN BRAKE FLUID (for Manual Transaxle) (See page BR-28)**
13. **REMOVE WINDSHIELD WIPER LINK ASSEMBLY**
    HINT:
    See page WW-9.
14. **REMOVE COWL TOP PANEL OUTER SUB-ASSEMBLY (See page ES-424)**
15. **REMOVE NO. 1 ENGINE COVER SUB-ASSEMBLY**
    (a) Remove the 2 nuts and cover.
16. **REMOVE V-RIBBED BELT (See page EM-6)**

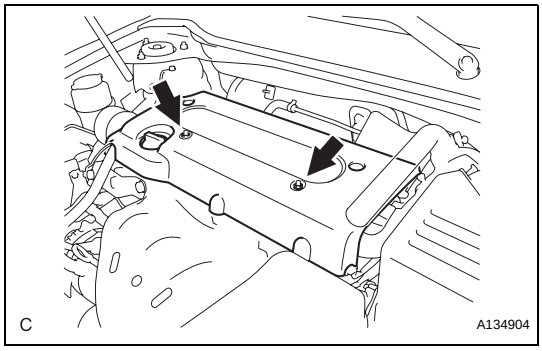

17. **REMOVE AIR CLEANER INLET ASSEMBLY**
    (a) Remove the 2 bolts, clamp and air cleaner inlet.
18. **REMOVE AIR CLEANER CAP SUB-ASSEMBLY (See page ES-416)**

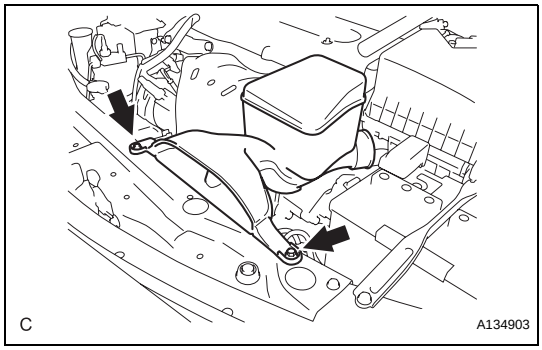

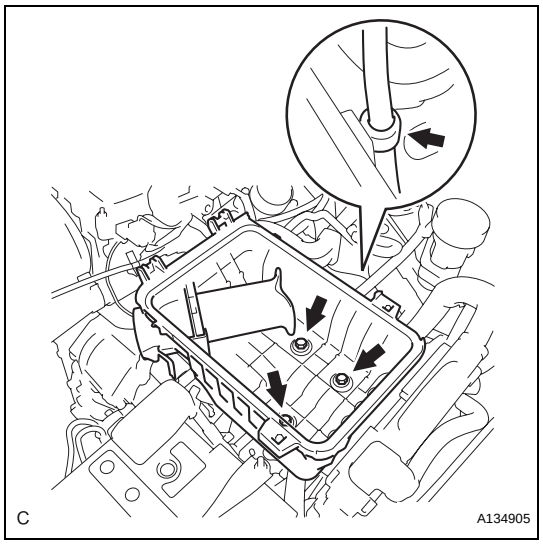

19. REMOVE AIR CLEANER CASE SUB-ASSEMBLY

(a) Disconnect the hose clamp.

(b) Remove the 3 bolts and air cleaner case.

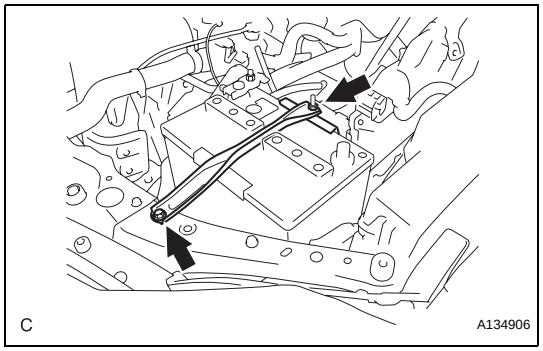

20. REMOVE BATTERY

(a) Loosen the bolt and nut, and remove the battery clamp.

(b) Remove the battery and battery tray.

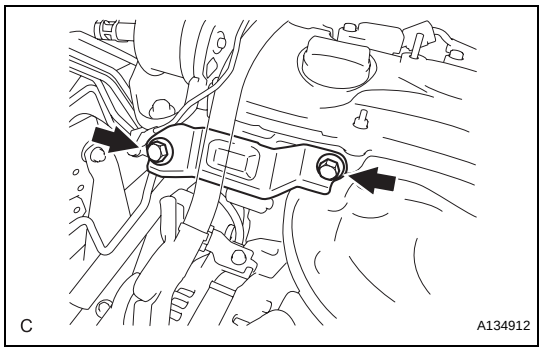

21. REMOVE NO. 2 ENGINE MOUNTING STAY RH

(a) Remove the 2 bolts and No. 2 mounting stay RH.

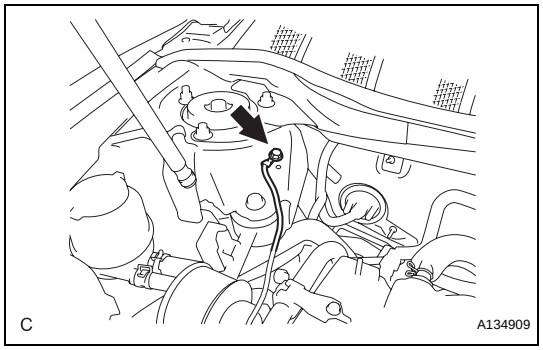

22. REMOVE ENGINE MOVING CONTROL ROD SUB-ASSEMBLY

(a) Remove the bolt and disconnect the ground cable.

EM

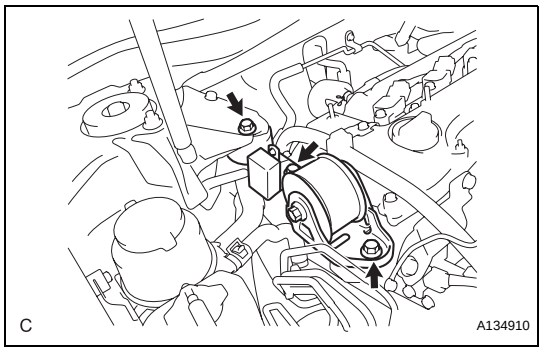

(b) Remove the 3 bolts and the engine moving control rod with bracket.

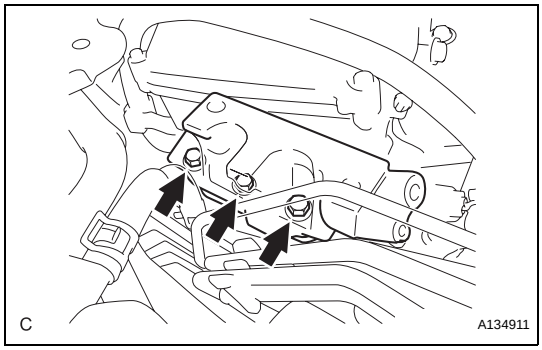

23. REMOVE NO. 2 ENGINE MOUNTING BRACKET RH

(a) Remove the 3 bolts and No. 2 mounting bracket RH.

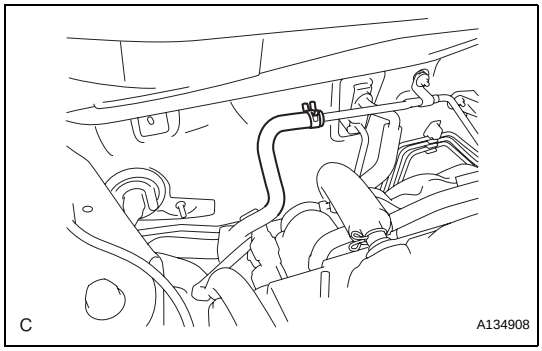

24. DISCONNECT NO. 1 VACUUM HOSE CONNECTOR

(a) Remove the clamp and disconnect the vacuum hose connector.

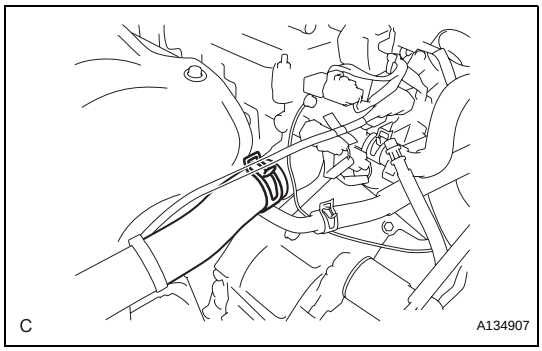

25. DISCONNECT RADIATOR HOSE INLET

(a) Remove the clamp and disconnect the radiator hose inlet.

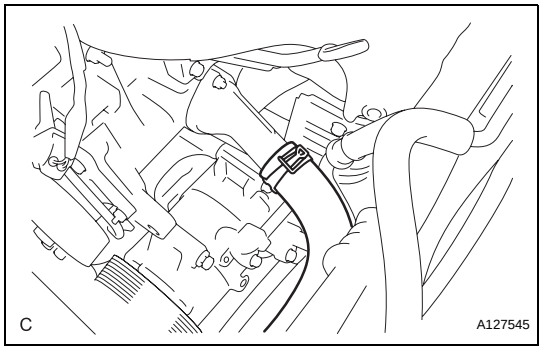

26. DISCONNECT RADIATOR HOSE OUTLET

(a) Remove the clamp and disconnect the radiator hose outlet.

27. DISCONNECT OIL COOLER INLET HOSE (for Automatic Transaxle) (See page CO-22)

28. DISCONNECT OIL COOLER OUTLET HOSE (for Automatic Transaxle) (See page CO-23)

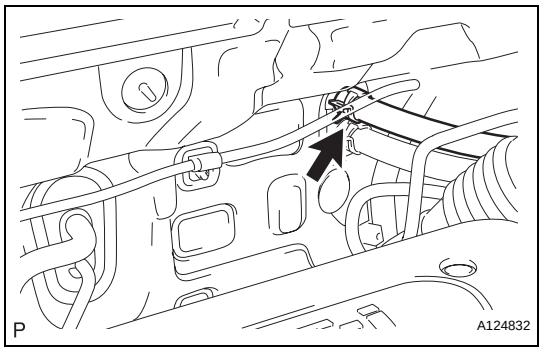

29. DISCONNECT HEATER INLET WATER HOSE

(a) Disconnect the heater inlet water hose.

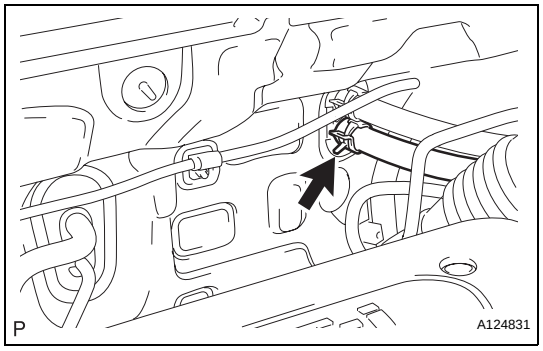

30. DISCONNECT HEATER OUTLET WATER HOSE

(a) Disconnect the heater outlet water hose.

31. REMOVE ECM

HINT:

See page ES-432.

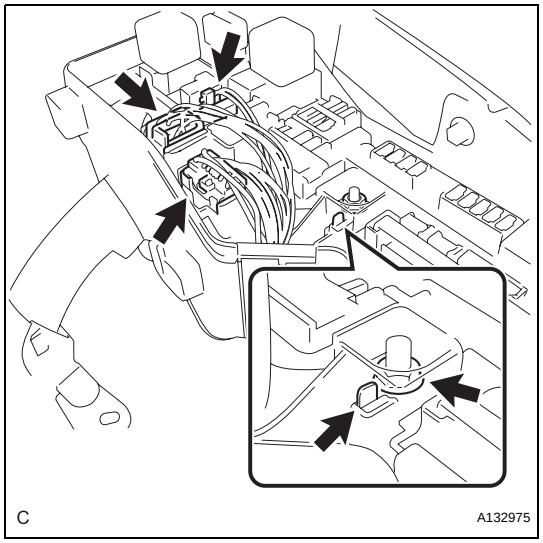

32. DISCONNECT ENGINE WIRE

(a) Disconnect the engine wire from the engine room relay block.
   (1) Remove the nut and separate the wire harness.
   (2) Using a screwdriver, unlock the engine room R/B. Pull the engine room R/B upward.
   (3) Disconnect the engine wire connectors.

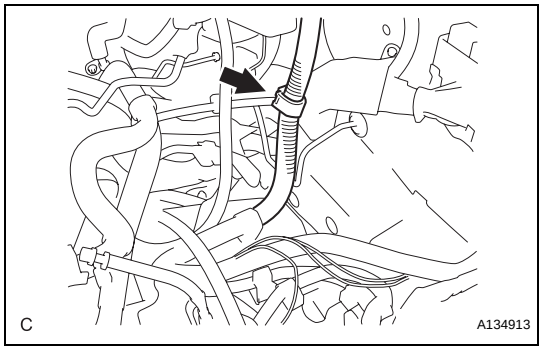

(b) Remove the clamp from the bracket.

EM

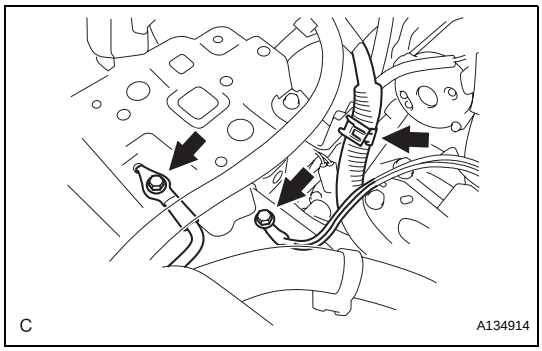

(c) Remove the 2 bolts and clamp from the body.

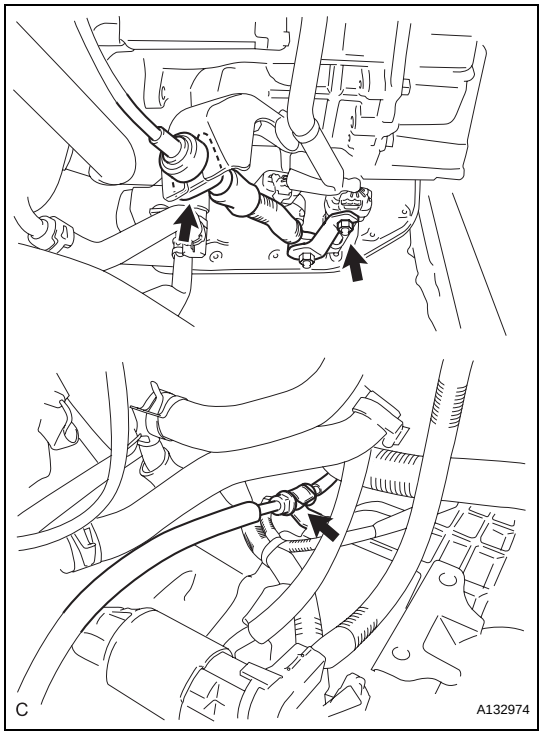

33. DISCONNECT TRANSMISSION CONTROL CABLE ASSEMBLY (for Automatic Transaxle)

(a) Remove the clip and nut, and separate the control lever.

(b) Separate the clamp and separate the cable from the transaxle.

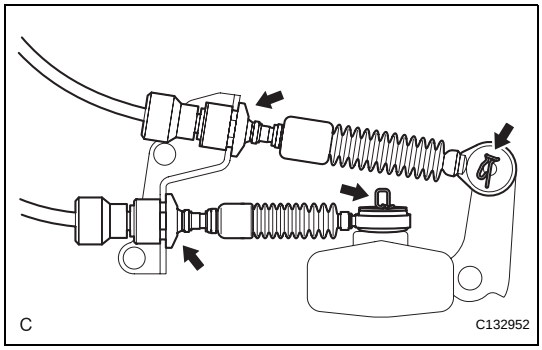

34. DISCONNECT TRANSMISSION CONTROL CABLE ASSEMBLY (for Manual Transaxle)

(a) Remove the 2 clips and 2 washers and disconnect the 2 cables from the transaxle.

(b) Remove the 2 clips and disconnect the 2 cables from the control cable bracket.

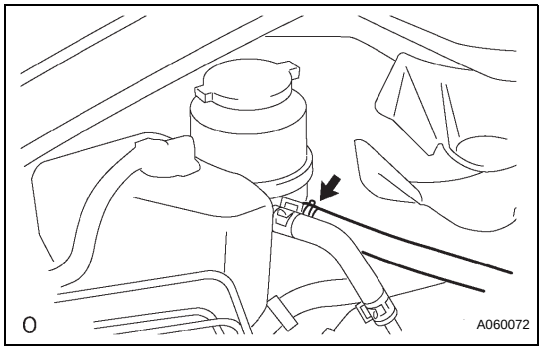

35. DISCONNECT NO. 1 OIL RESERVOIR TO PUMP HOSE

(a) Disconnect the No. 1 oil reservoir to pump hose.

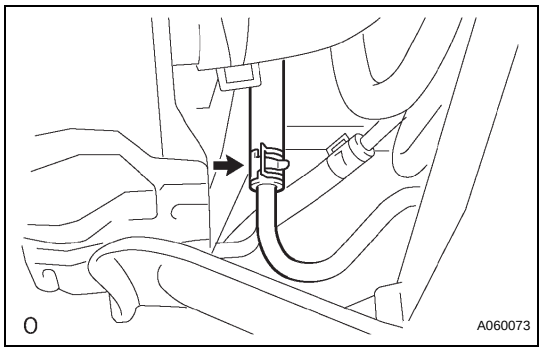

36. DISCONNECT RETURN TUBE SUB-ASSEMBLY

(a) Disconnect the return tube sub-assembly.

37. REMOVE CLUTCH ACCUMULATOR ASSEMBLY (for Manual Transaxle)

HINT:

See page CL-27.

38. REMOVE CLUTCH RELEASE CYLINDER ASSEMBLY (for Manual Transaxle)

HINT:

See page CL-24.

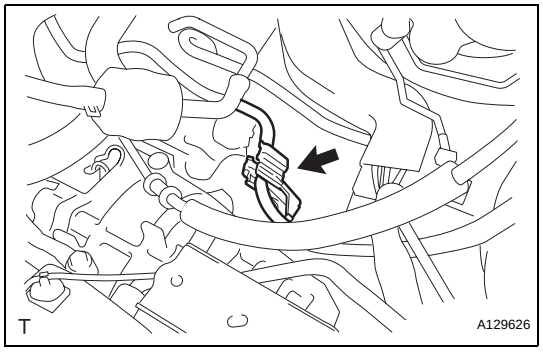

39. DISCONNECT FUEL TUBE SUB-ASSEMBLY

(a) Remove the No. 1 fuel pipe clamp.

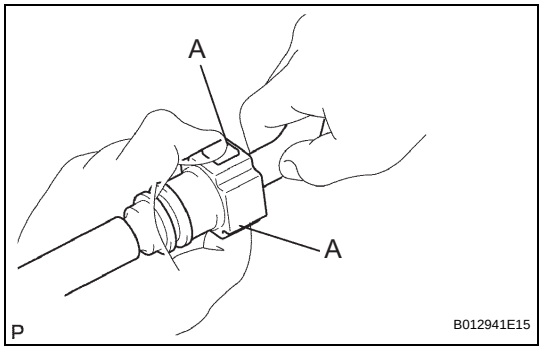

(b) Disconnect the connector from the tube while pinching part A with your fingers as shown in the illustration.

NOTICE:

- **Check for contamination in the pipe and around the connector. Clean if necessary and then disconnect the connector.**
- **Disconnect the connector by hand.**
- **Do not bend, fold or rotate the nylon tube.**
- **If the pipe and connector are stuck together, push and pull the connector until it becomes free.**
- **Put the pipe and connector ends in vinyl bags to prevent damage and contamination.**

40. REMOVE GENERATOR ASSEMBLY (See page CH-11)

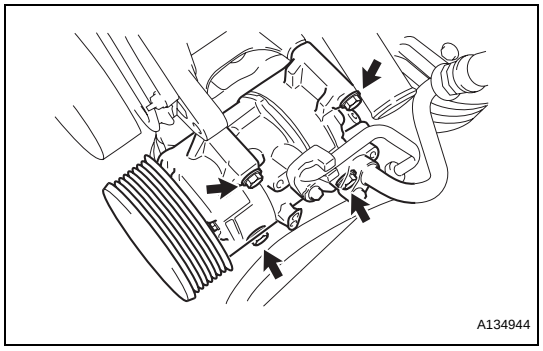

41. SEPARATE COMPRESSOR AND MAGNETIC CLUTCH

(a) Disconnect the connector.

(b) Remove the 4 bolts and separate the compressor.

HINT:

Hang up the hoses instead of detaching them.

42. REMOVE FRONT EXHAUST PIPE ASSEMBLY

HINT:

See page EX-2.

43. REMOVE FRONT AXLE HUB NUT LH (See page DS-7)

44. REMOVE FRONT AXLE HUB NUT RH

HINT:

Use the same procedures described for the LH side.

45. REMOVE FRONT STABILIZER LINK ASSEMBLY LH (See page DS-7)

46. REMOVE FRONT STABILIZER LINK ASSEMBLY RH
HINT:
Use the same procedures described for the LH side.

47. REMOVE FRONT SPEED SENSOR LH (See page DS-7)

48. REMOVE FRONT SPEED SENSOR RH
HINT:
Use the same procedures described for the LH side.

49. DISCONNECT TIE ROD ASSEMBLY LH (See page DS-8)

50. DISCONNECT TIE ROD ASSEMBLY RH
HINT:
Use the same procedures described for the LH side.

51. DISCONNECT FRONT SUSPENSION LOWER NO. 1 ARM LH (See page DS-8)

52. DISCONNECT FRONT SUSPENSION LOWER NO. 1 ARM RH
HINT:
Use the same procedures described for the LH side.

53. SEPARATE FRONT AXLE ASSEMBLY LH (See page DS-8)

54. SEPARATE FRONT AXLE ASSEMBLY RH
HINT:
Use the same procedures described for the LH side.

55. REMOVE DRIVE PLATE & TORQUE CONVERTER CLUTCH SETTING BOLT (for Automatic Transaxle) (See page AX-164)

56. REMOVE NO. 1 EXHAUST PIPE SUPPORT BRACKET
(a) Remove the 2 bolts and exhaust pipe support bracket.

57. SEPARATE STEERING SLIDING YOKE (See page PS-40)

58. REMOVE ENGINE ASSEMBLY WITH TRANSAXLE
(a) Set the engine lifter.
(b) Remove the 4 bolts, 2 nuts and frame side rail plate RH and LH.

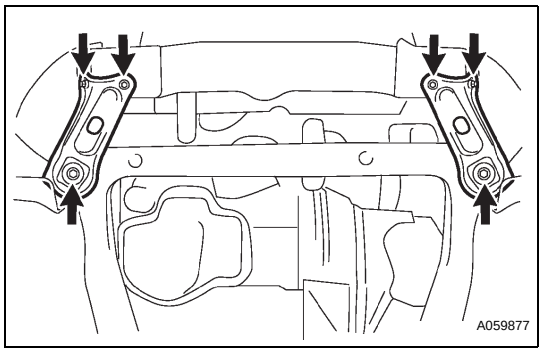

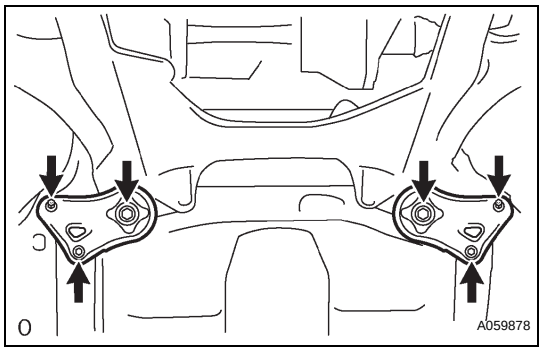

(c) Remove the 4 bolts, 2 nuts and front suspension member brace rear RH and LH.
(d) Carefully remove the engine assembly from the vehicle.

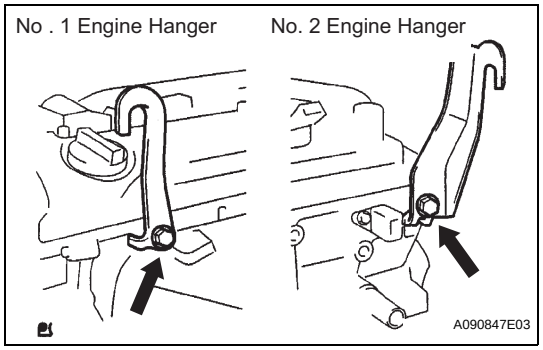

(e) Install the 2 engine hangers as shown in the illustration.
Parts No.:

Parts	Parts No.
No. 1 Engine hanger	12281-28010
No. 2 Engine hanger	12282-28010
Bolt	91512-61020

Torque: 38 N*m (387 kgf*cm, 28 ft.*lbf)

(f) Using a chain block and an engine sling device, hang the engine assembly.

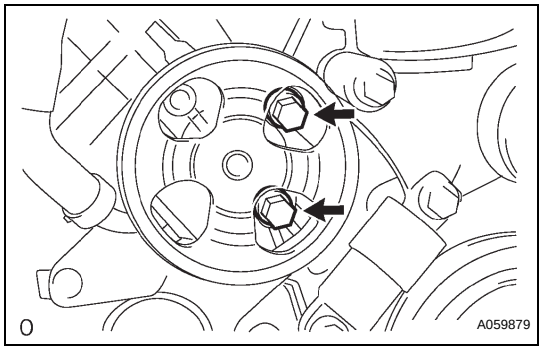

59. REMOVE VANE PUMP ASSEMBLY

(a) Disconnect the oil pressure switch connector.
(b) Loosen the 2 bolts and remove the vane pump from the engine.

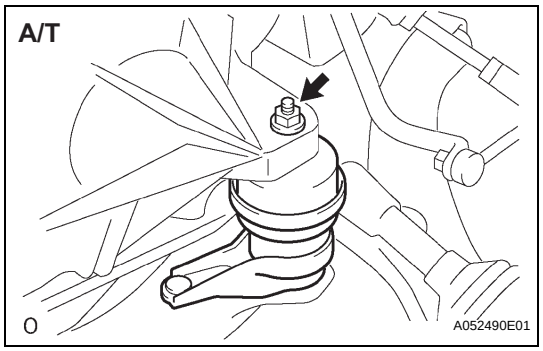

60. REMOVE FRONT FRAME ASSEMBLY

(a) A/T:
Remove the nut from the engine mounting insulator LH.

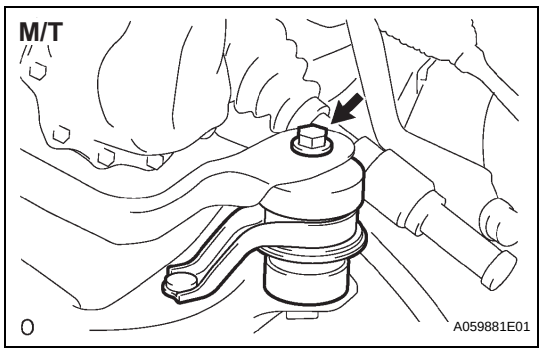

(b) M/T:
Remove the bolt from the engine mounting insulator LH.

EM

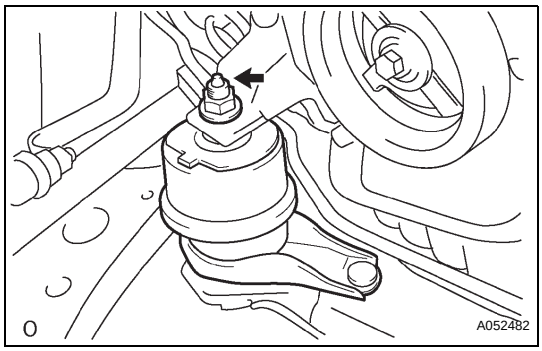

(c) Remove the nut from the engine mounting insulator RH.

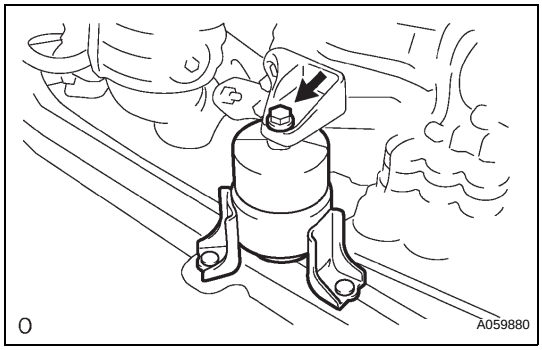

(d) Remove the bolt from the engine mounting insulator FR.

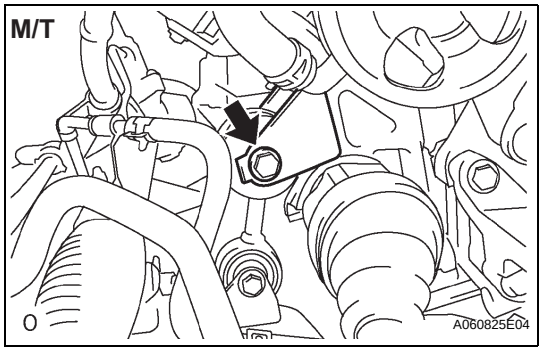

(e) M/T:
Remove the bolt from the engine lateral control rod.

(f) Raise the engine assembly and separate the front frame.

61. REMOVE FRONT DRIVE SHAFT ASSEMBLY LH (See page DS-9)

62. REMOVE FRONT DRIVE SHAFT ASSEMBLY RH (See page DS-9)

63. REMOVE ENGINE WIRE

64. REMOVE STARTER ASSEMBLY (for Manual Transaxle) (See page ST-5)

65. REMOVE STARTER ASSEMBLY (for Automatic Transaxle) (See page ST-5)

66. SEPARATE AUTOMATIC TRANSAXLE ASSEMBLY (for Automatic Transaxle)
HINT:
See page AX-162.

67. SEPARATE MANUAL TRANSAXLE ASSEMBLY (for Manual Transaxle)
HINT:
See page MX-24.

68. REMOVE DRIVE PLATE & RING GEAR SUB-ASSEMBLY (for Automatic Transaxle) (See page EM-79)

69. REMOVE CLUTCH COVER ASSEMBLY (for Manual Transaxle) (See page CL-32)

70. REMOVE CLUTCH DISC ASSEMBLY (for Manual Transaxle) (See page CL-32)

71. REMOVE FLYWHEEL SUB-ASSEMBLY (for Manual Transaxle) (See page EM-79)

72. INSTALL ENGINE STAND

(a) Fix the engine onto a engine stand with the bolts.

73. REMOVE FUEL DELIVERY PIPE WITH INJECTOR (See page FU-13)

74. REMOVE INTAKE MANIFOLD

(a) Remove the 5 bolts, 2 nuts, and intake manifold.

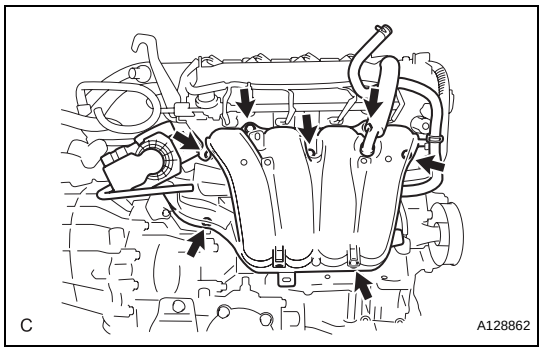

(b) Remove the gasket from the intake manifold.

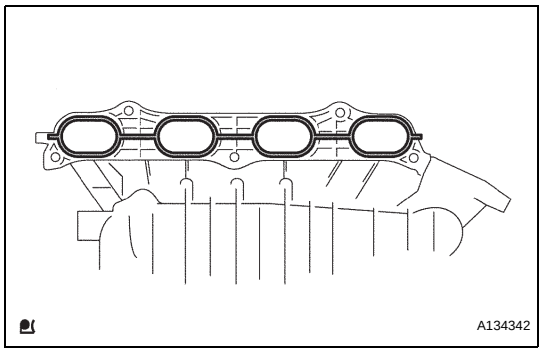

75. REMOVE INTAKE AIR CONTROL VALVE (for PZEV) (See page IT-7)

76. REMOVE NO. 2 VENTILATION HOSE

77. REMOVE NO. 1 INTAKE MANIFOLD INSULATOR

(a) Remove the intake manifold insulator from the cylinder block.

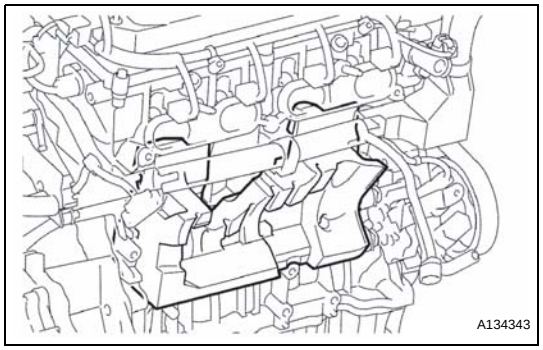

78. REMOVE DRIVE SHAFT BEARING BRACKET

(a) Remove the 3 bolts and drive shaft bearing bracket.

79. REMOVE OIL LEVEL GAUGE SUB-ASSEMBLY

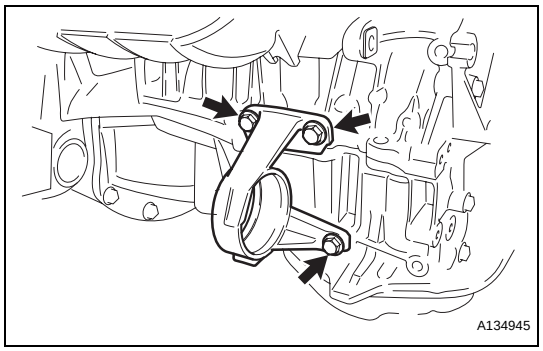

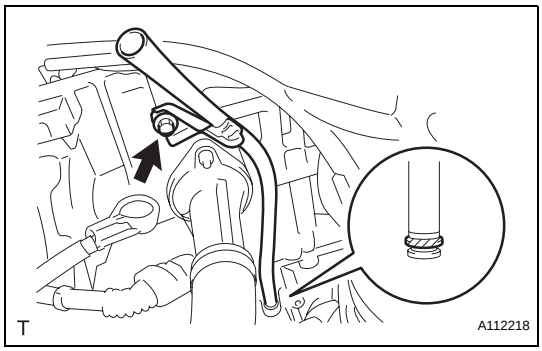

80. REMOVE OIL LEVEL GAUGE GUIDE

(a) Remove the bolt and oil level gauge guide.

(b) Remove the O-ring from the oil level gauge guide.

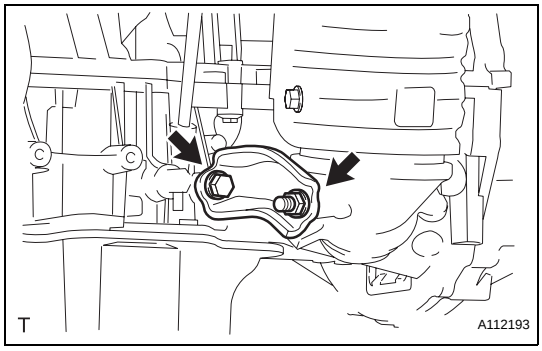

81. REMOVE MANIFOLD STAY

(a) Remove the bolt, nut and stay.

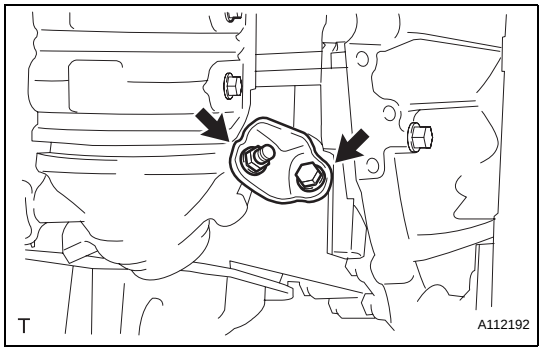

82. REMOVE NO. 2 MANIFOLD STAY

(a) Remove the bolt, nut and stay.

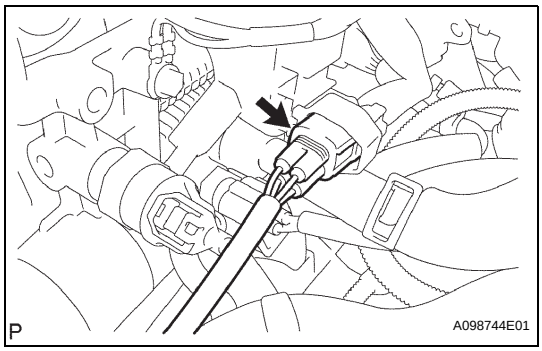

83. REMOVE EXHAUST MANIFOLD CONVERTER SUB-ASSEMBLY

(a) For PZEV:

(1) Disconnect the air-fuel ratio sensor connector.

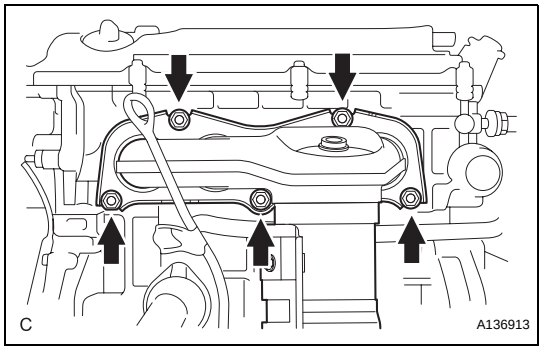

(2) Remove the 5 nuts, manifold converter and gasket.

EM

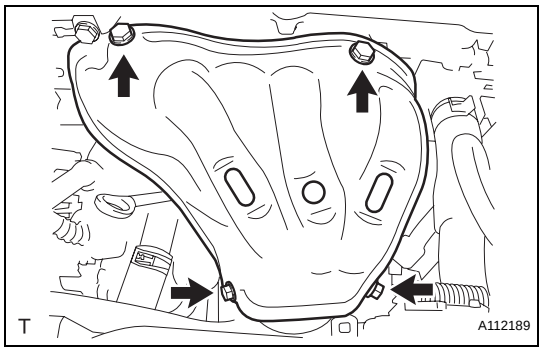

(b) Except for PZEV:
(1) Remove the 4 bolts and No. 1 insulator.

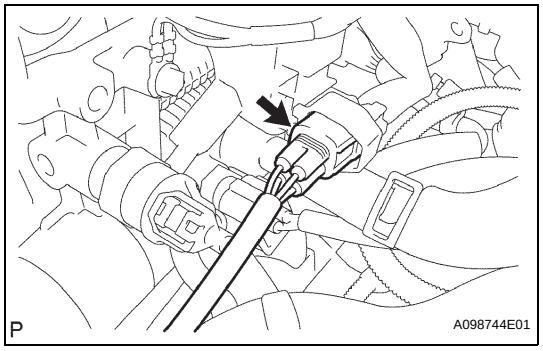

(2) Disconnect the air-fuel ratio sensor connector.

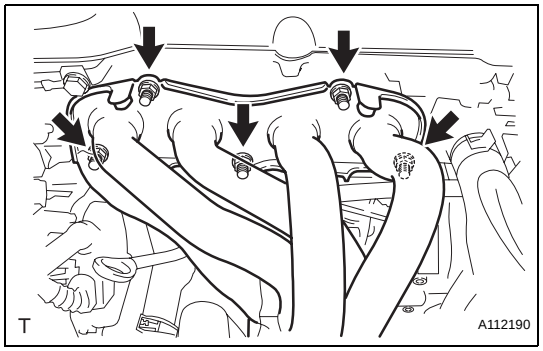

(3) Remove the 5 nuts, manifold converter and gasket.

84. REMOVE WATER INLET (See page CO-13)

85. REMOVE THERMOSTAT (See page CO-13)

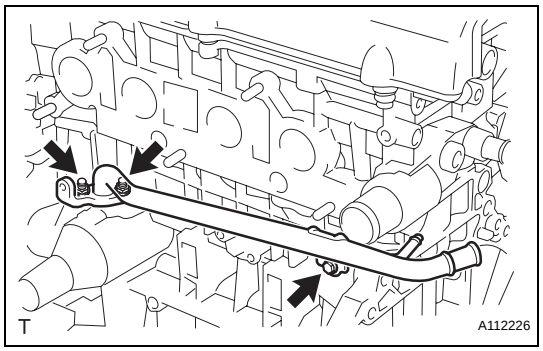

86. REMOVE NO. 1 WATER BY-PASS PIPE
(a) Remove the bolt, 2 nuts and No. 1 water by-pass pipe with the gasket.

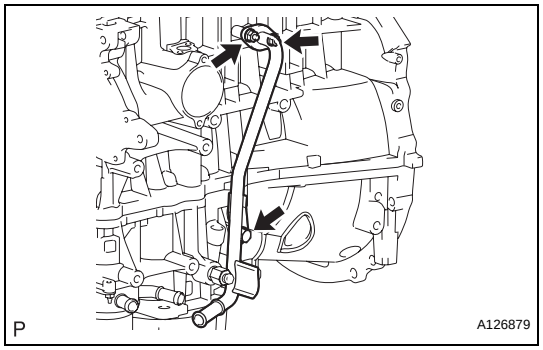

87. REMOVE OIL COOLER PIPE (w/ Oil Cooler)
(a) Remove the bolt, 2 nuts and oil cooler pipe with the gasket.

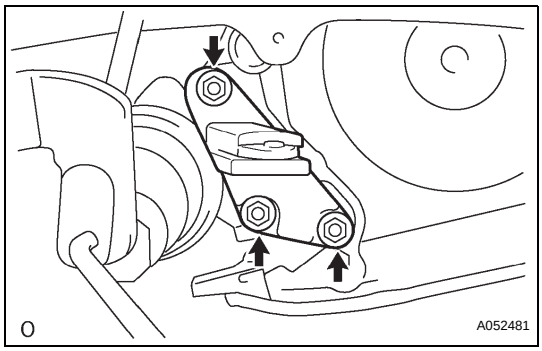

88. REMOVE ENGINE MOUNTING BRACKET RH

(a) Remove the 3 bolts and engine mounting bracket RH.

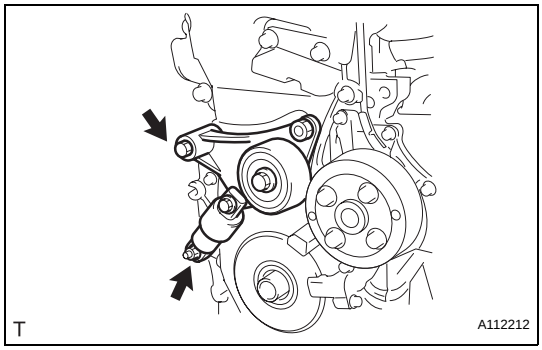

89. REMOVE V-RIBBED BELT TENSIONER ASSEMBLY

(a) Remove the bolt, nut and belt tensioner.

90. REMOVE IGNITION COIL ASSEMBLY

(a) Remove the 4 bolts and 4 ignition coils.

91. REMOVE CAMSHAFT TIMING OIL CONTROL VALVE ASSEMBLY (See page ES-405)

92. REMOVE KNOCK SENSOR

(a) Disconnect the sensor connector.

(b) Remove the nut and sensor.

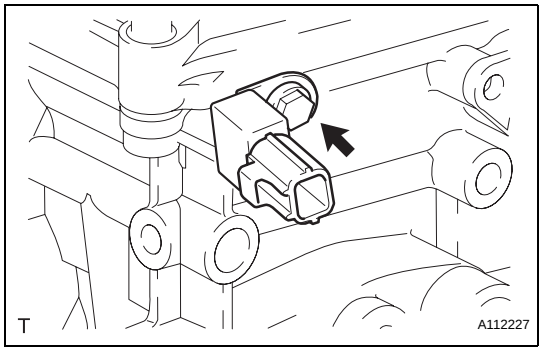

93. REMOVE RADIO SETTING CONDENSER

(a) Remove the bolt and radio setting condenser.

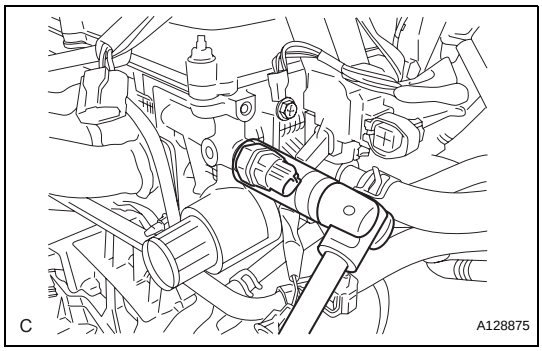

94. REMOVE ENGINE OIL PRESSURE SWITCH ASSEMBLY

(a) Using a 24 mm deep socket wrench, remove the engine oil pressure switch assembly.

EM

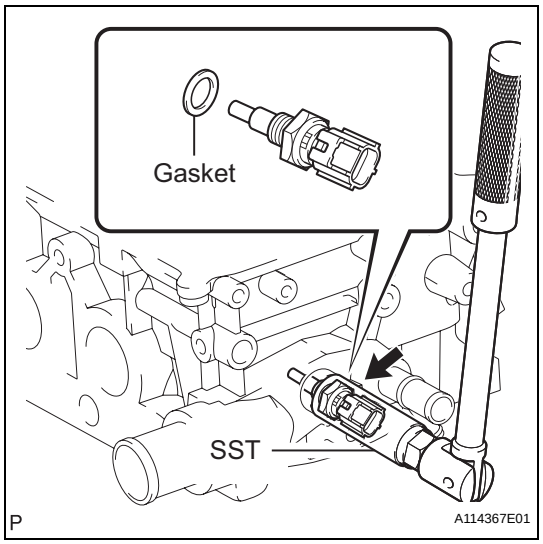

95. REMOVE ENGINE COOLANT TEMPERATURE SENSOR

(a) Using SST, remove the sensor and gasket.
SST 09817-33190

INSPECTION

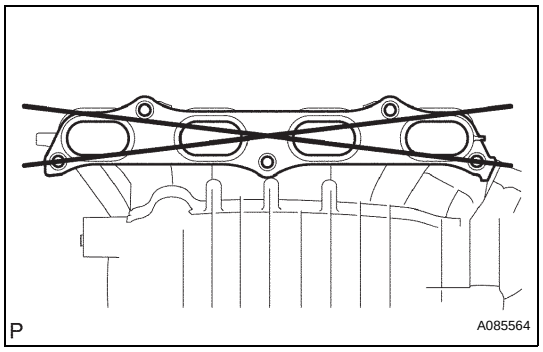

1. INSPECT INTAKE MANIFOLD

(a) Using a precision straight edge and feeler gauge, measure the surface contacting the cylinder head for warpage.
Maximum warpage:
0.20 mm (0.0079 in.)
If the warpage is greater than maximum, replace the manifold.

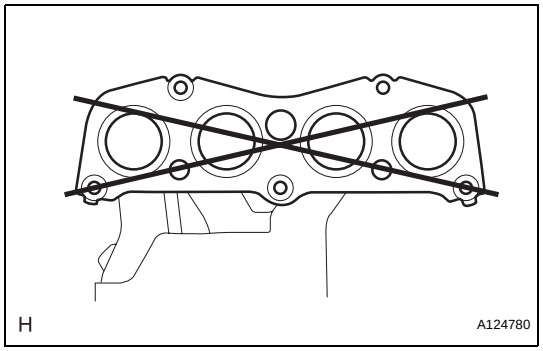

2. INSPECT EXHAUST MANIFOLD CONVERTER SUB-ASSEMBLY

(a) Using a precision straight edge and feeler gauge, measure the surface contacting the cylinder head for warpage.
Maximum warpage:
0.70 mm (0.0276 in.)
If the warpage is greater than the maximum, replace the manifold.

INSTALLATION

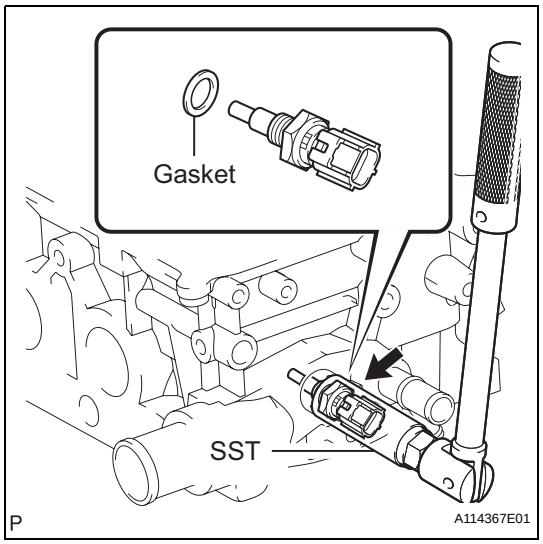

1. INSTALL ENGINE COOLANT TEMPERATURE SENSOR

(a) Using SST, install a new gasket and the ECT sensor.
SST 09817-33190
Torque: 20 N*m (208 kgf*cm, 15 ft.*lbf)

EM

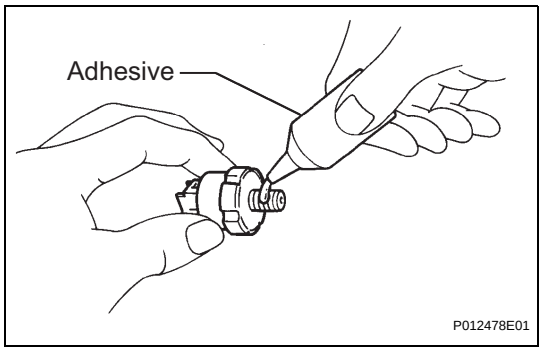

2. INSTALL ENGINE OIL PRESSURE SWITCH ASSEMBLY

(a) Clean the threads of the oil pressure switch. Apply adhesive to 2 or 3 threads of the oil.
Adhesive:
Part No. 08833-00080 THREE BOND 1344 or equivalent

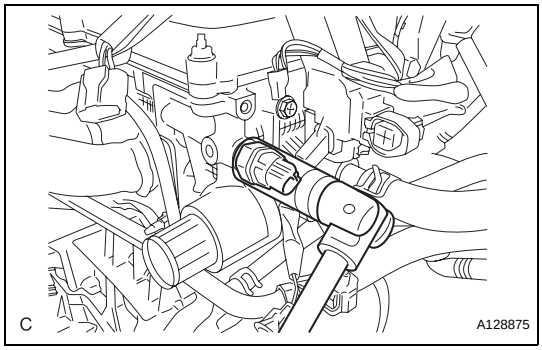

(b) Using a 24 mm deep socket wrench, install the oil pressure switch.
Torque: 15 N*m (153 kgf*cm, 11 ft.*lbf)

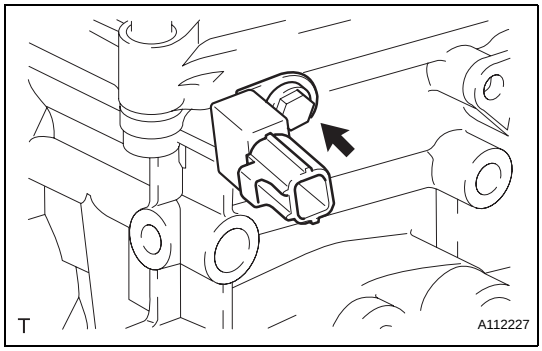

3. INSTALL RADIO SETTING CONDENSER

(a) Install the condenser with the bolt.
Torque: 10 N*m (102 kgf*cm, 7 ft.*lbf)

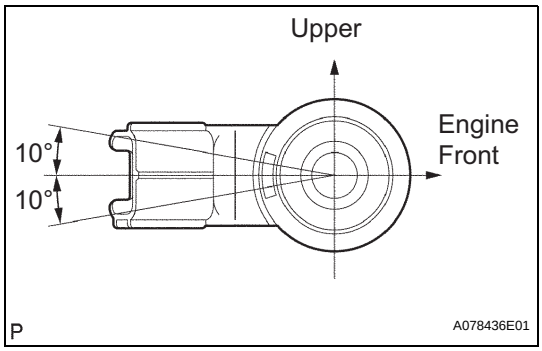

4. INSTALL KNOCK SENSOR

(a) Install the sensor with the nut as shown in the illustration.
Torque: 20 N*m (204 kgf*cm, 15 ft.*lbf)

5. INSTALL CAMSHAFT TIMING OIL CONTROL VALVE ASSEMBLY (See page ES-406)

6. INSTALL IGNITION COIL ASSEMBLY

(a) Install the 4 ignition coils with the 4 bolts.
Torque: 9.0 N*m (92 kgf*cm, 80 in.*lbf)

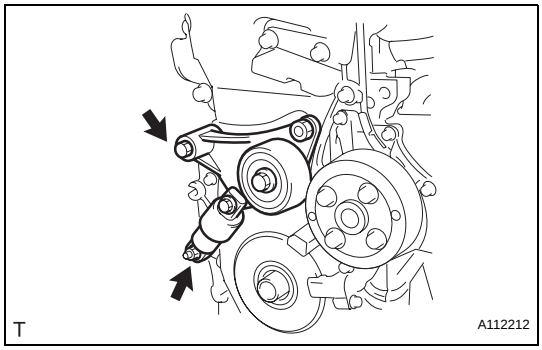

7. INSTALL V-RIBBED BELT TENSIONER ASSEMBLY

(a) Install the V-ribbed belt tensioner with the bolt and nut.
Torque: 60 N*m (607 kgf*cm, 44 ft.*lbf)

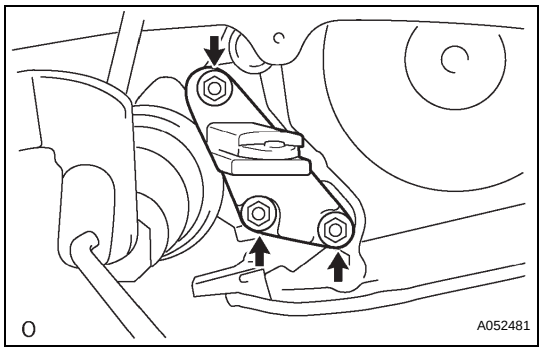

8. INSTALL ENGINE MOUNTING BRACKET RH

(a) Remove the engine mounting bracket RH with the 3 bolts.
Torque: 54 N*m (551 kgf*cm, 40 ft.*lbf)

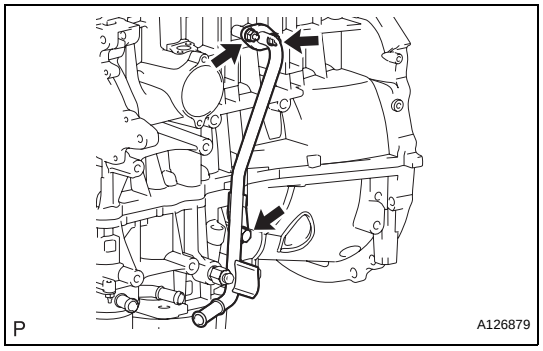

9. INSTALL OIL COOLER PIPE (w/ Oil Cooler)

(a) Install a new gasket and the pipe with the bolt and 2 nuts.
Torque: 9.0 N*m (92 kgf*cm, 80 in.*lbf)

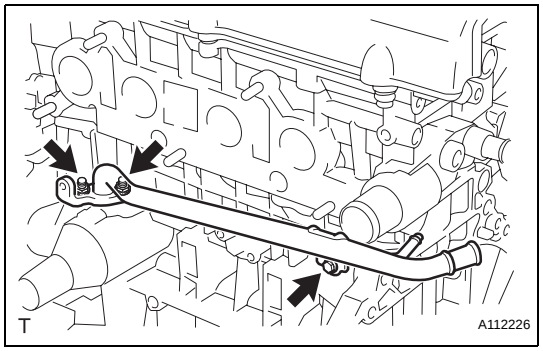

10. INSTALL NO. 1 WATER BY-PASS PIPE

(a) Install a new gasket and the pipe with the bolt and 2 nuts.
Torque: 9.0 N*m (92 kgf*cm, 80 in.*lbf)

11. INSTALL THERMOSTAT (See page CO-13)

12. INSTALL WATER INLET (See page CO-14)

13. INSTALL EXHAUST MANIFOLD CONVERTER SUB-ASSEMBLY

(a) Except for PZEV:
(1) Install a new gasket onto the cylinder head.
(2) Temporarily tighten the exhaust manifold converter with the 5 nuts.
(3) Tighten the 5 nuts in the sequence shown in the illustration.
Torque: 37 N*m (378 kgf*cm, 27 ft.*lbf)

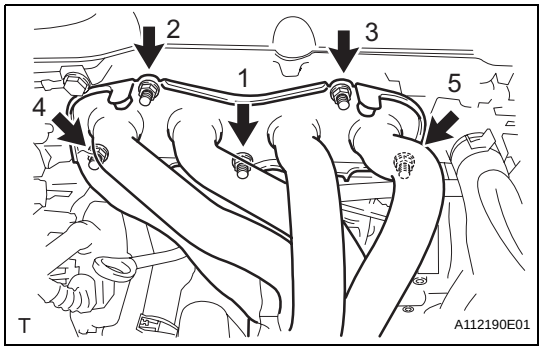

EM

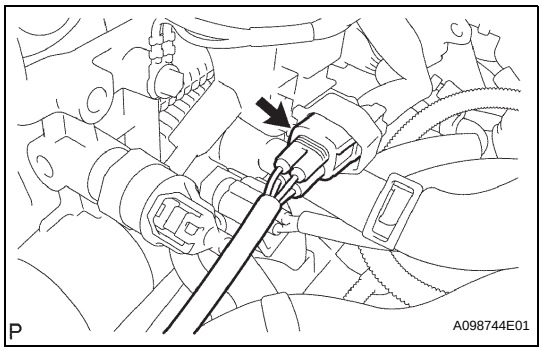

(4) Connect the air-fuel ratio sensor connector.

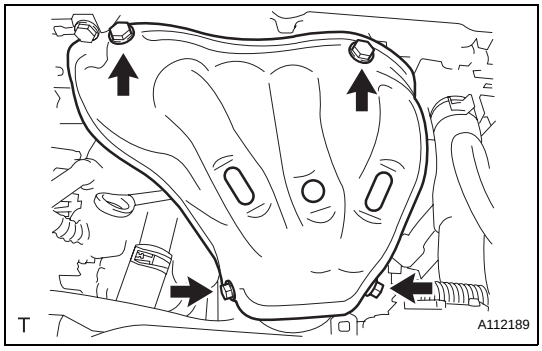

(5) Install the exhaust manifold heat insulator with the 4 bolts.
Torque: 12 N*m (122 kgf*cm, 9 ft.*lbf)

(b) For PZEV:
(1) Install a new gasket onto the cylinder head.
(2) Temporarily tighten the exhaust manifold converter with the 5 nuts.

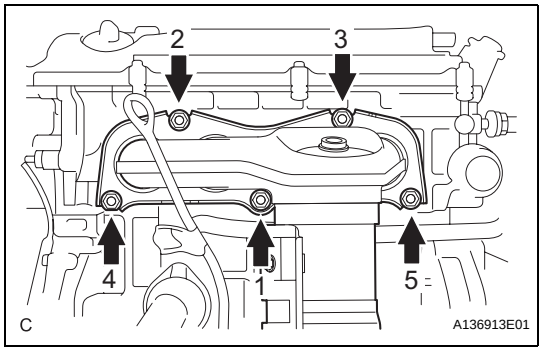

(3) Tighten the 5 nuts in the sequence shown in the illustration.
Torque: 37 N*m (378 kgf*cm, 27 ft.*lbf)

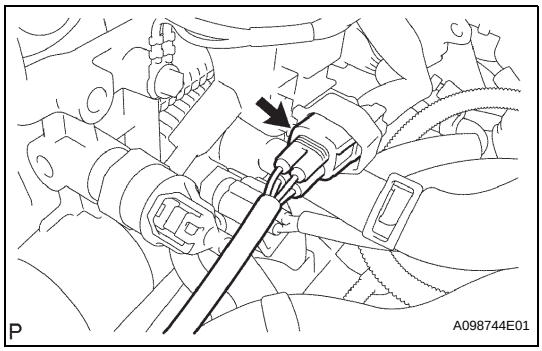

(4) Connect the air-fuel ratio sensor connector.

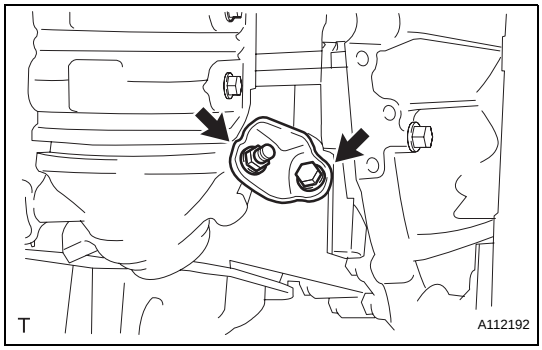

14. INSTALL NO. 2 MANIFOLD STAY

(a) Install the stay with the bolt and nut.
Torque: 44 N*m (449 kgf*cm, 32 ft.*lbf)

EM

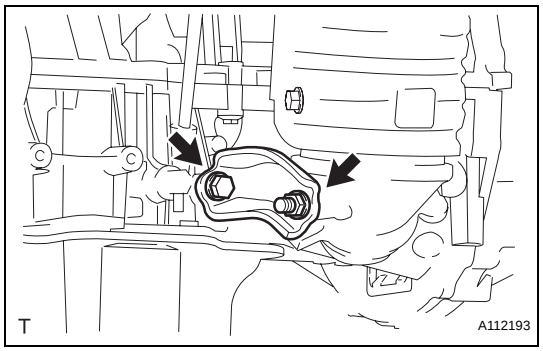

15. INSTALL MANIFOLD STAY

(a) Install the stay with the bolt and nut.
Torque: 44 N*m (449 kgf*cm, 32 ft.*lbf)

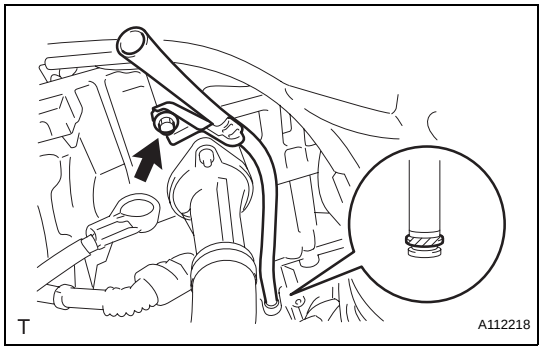

16. INSTALL OIL LEVEL GAUGE GUIDE

(a) Apply a light coat of engine oil to a new O-ring and install it to the guide.
(b) Install the oil level gauge guide with the bolt.
Torque: 9.0 N*m (92 kgf*cm, 80 in.*lbf)

17. INSTALL OIL LEVEL GAUGE SUB-ASSEMBLY

EM

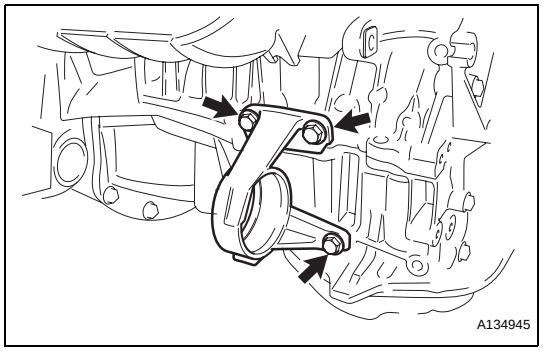

18. INSTALL DRIVE SHAFT BEARING BRACKET

(a) Install the bracket with the 3 bolts.
Torque: 64 N*m (653 kgf*cm, 47 ft.*lbf)

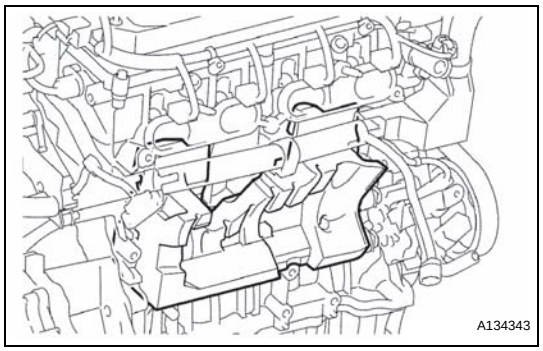

19. INSTALL NO. 1 INTAKE MANIFOLD INSULATOR

(a) Install the intake manifold insulator onto the cylinder block.

20. INSTALL NO. 2 VENTILATION HOSE

21. INSTALL INTAKE AIR CONTROL VALVE (for PZEV)
(See page IT-7)

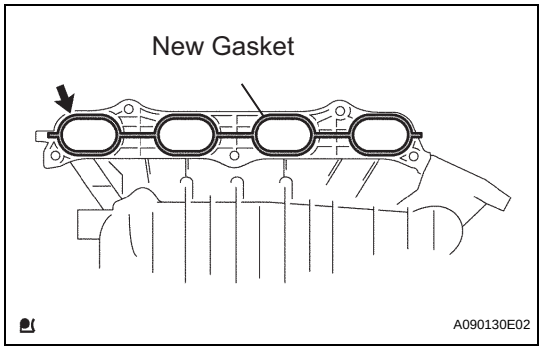

22. INSTALL INTAKE MANIFOLD

(a) Install a new gasket into the intake manifold.

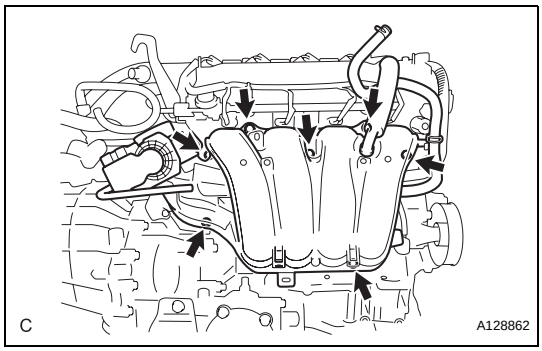

(b) Install the intake manifold with the 5 bolts and 2 nuts.
Torque: 30 N*m (305 kgf*cm, 22 ft.*lbf)

23. INSTALL FUEL DELIVERY PIPE WITH INJECTOR (See page FU-15)

24. REMOVE ENGINE STAND

25. INSTALL FLYWHEEL SUB-ASSEMBLY (for Manual Transaxle) (See page EM-80)

26. INSTALL CLUTCH DISC ASSEMBLY (for Manual Transaxle) (See page CL-34)

27. INSTALL CLUTCH COVER ASSEMBLY (for Manual Transaxle) (See page CL-34)

28. INSTALL DRIVE PLATE & RING GEAR SUB-ASSEMBLY (for Automatic Transaxle) (See page EM-81)

29. INSTALL MANUAL TRANSAXLE ASSEMBLY (for Manual Transaxle)
HINT:
See page MX-27.

30. INSTALL AUTOMATIC TRANSAXLE ASSEMBLY (for Automatic Transaxle)
HINT:
See page AX-168.

31. INSTALL STARTER ASSEMBLY (for Manual Transaxle) (See page ST-13)

32. INSTALL STARTER ASSEMBLY (for Automatic Transaxle) (See page ST-13)

33. INSTALL ENGINE WIRE

34. INSTALL FRONT DRIVE SHAFT ASSEMBLY LH (See page DS-20)

35. INSTALL FRONT DRIVE SHAFT ASSEMBLY RH (See page DS-21)

36. INSTALL FRONT FRAME ASSEMBLY

(a) A/T:
Install the engine mounting insulator LH with the nut.
Torque: 95 N*m (969 kgf*cm, 70 ft.*lbf)

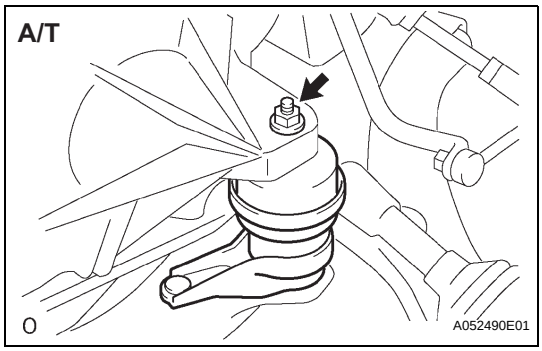

EM

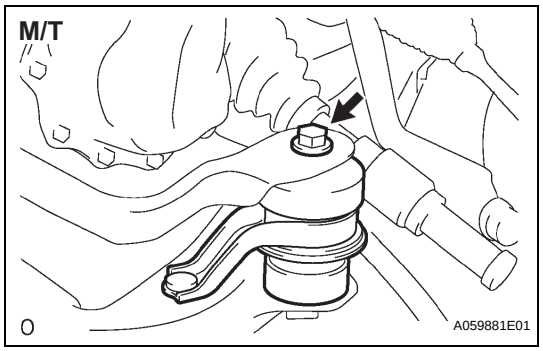

(b) M/T:
Install the engine mounting insulator LH with the bolt.
Torque: 143 N*m (1,459 kgf*cm, 105 ft.*lbf)

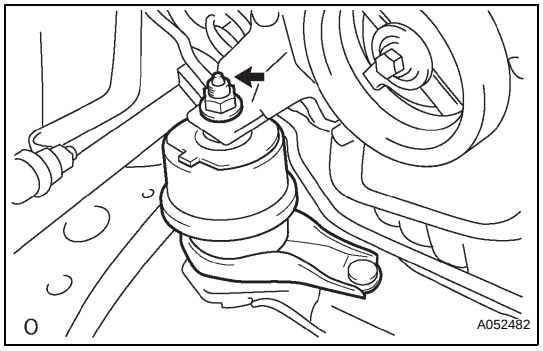

(c) Install the engine mounting insulator RH with the nut.
Torque: 95 N*m (969 kgf*cm, 70 ft.*lbf)

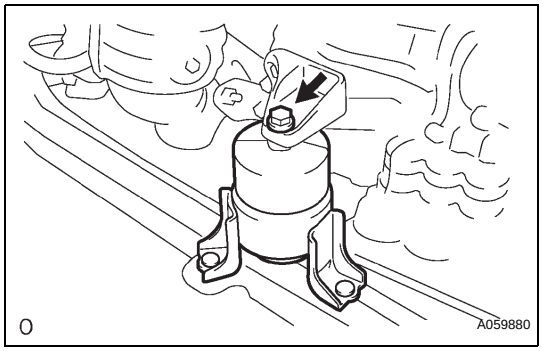

(d) Install the engine mounting insulator FR with the bolt.
Torque: 87 N*m (888 kgf*cm, 64 ft.*lbf)

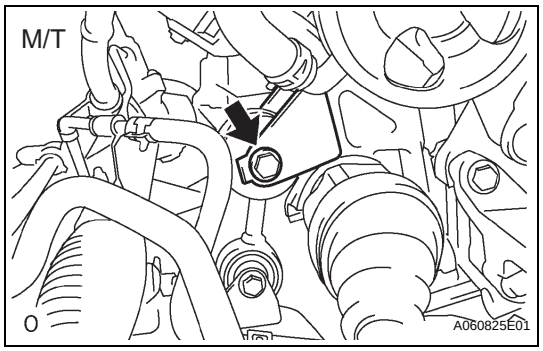

(e) M/T:
Install the engine lateral control rod with the bolt.
Torque: 89 N*m (910 kgf*cm, 66 ft.*lbf)

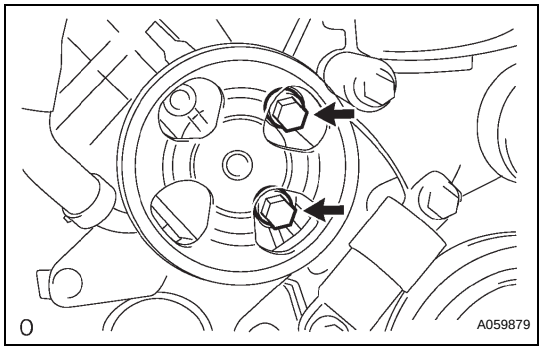

37. INSTALL VANE PUMP ASSEMBLY

(a) Install the vane pump to the engine with the 2 bolts.
Torque: 43 N*m (439 kgf*cm, 32 ft.*lbf)

(b) Connect the oil pressure switch connector.

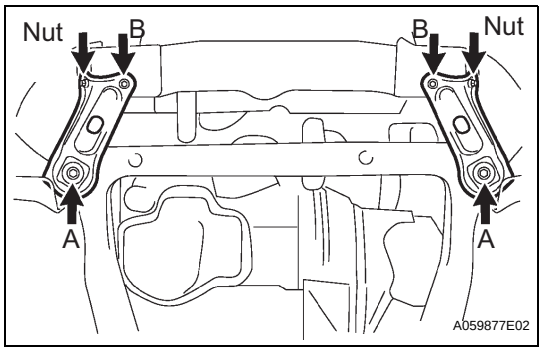

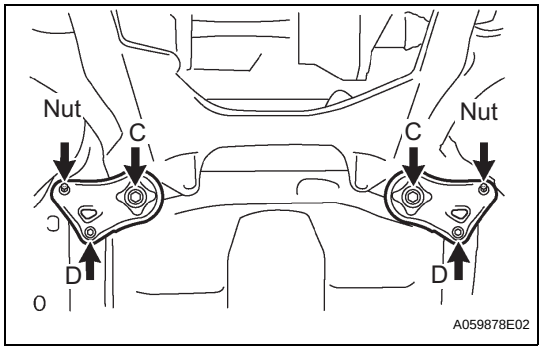

38. INSTALL ENGINE ASSEMBLY WITH TRANSAXLE

(a) Set the engine assembly with transaxle on the engine lifter.

(b) Install the engine assembly to the vehicle.

(c) Install the frame side plate LH and RH with the 4 bolts and 2 nuts.

Torque: Bolt A
85 N*m (867 kgf*cm, 63 ft.*lbf)
Bolt B and nut
32 N*m (326 kgf*cm, 24 ft.*lbf)

(d) Install the front suspension member brace rear RH and LH with the 4 bolts and 2 nuts.

Torque: Bolt C
85 N*m (867 kgf*cm, 63 ft.*lbf)
Bolt D and nut
32 N*m (326 kgf*cm, 24 ft.*lbf)

39. INSTALL STEERING SLIDING YOKE (See page PS-65)

40. INSTALL NO. 1 EXHAUST PIPE SUPPORT BRACKET

(a) Install the exhaust pipe support bracket with the 2 bolts.

Torque: 19 N*m (194 kgf*cm, 14 ft.*lbf)

41. INSTALL DRIVE PLATE & TORQUE CONVERTER CLUTCH SETTING BOLT (for Automatic Transaxle) (See page AX-172)

42. INSTALL FRONT AXLE ASSEMBLY LH (See page DS-21)

43. INSTALL FRONT AXLE ASSEMBLY RH

HINT:
Use the same procedures described for the LH side.

44. INSTALL FRONT SUSPENSION LOWER NO. 1 ARM LH (See page DS-21)

45. INSTALL FRONT SUSPENSION LOWER NO. 1 ARM RH

HINT:
Use the same procedures described for the LH side.

46. INSTALL TIE ROD ASSEMBLY LH (See page DS-21)

47. INSTALL TIE ROD ASSEMBLY RH

HINT:
Use the same procedures described for the LH side.

48. INSTALL FRONT SPEED SENSOR LH (See page DS-21)

49. INSTALL FRONT SPEED SENSOR RH
Torque: 8.0 N*m (82 kgf*cm, 71 in.*lbf)

50. INSTALL FRONT STABILIZER LINK ASSEMBLY LH (See page DS-22)

51. INSTALL FRONT STABILIZER LINK ASSEMBLY RH
HINT:
Use the same procedures described for the LH side.

52. INSTALL FRONT AXLE HUB NUT LH (See page DS-22)

53. INSTALL FRONT AXLE HUB NUT RH
HINT:
Use the same procedures described for the LH side.

54. INSTALL FRONT EXHAUST PIPE ASSEMBLY
HINT:
See page EX-3.

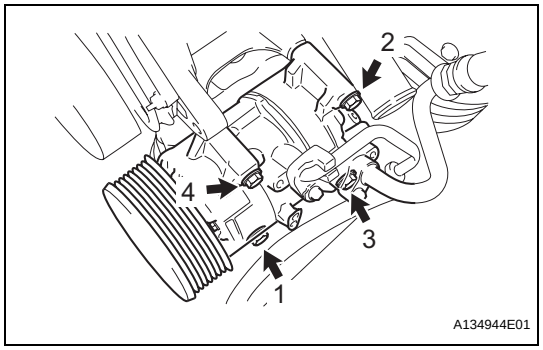

55. INSTALL COMPRESSOR AND MAGNETIC CLUTCH
(a) Install the cooler compressor with the 4 bolts.
Torque: 25 N*m (250 kgf*cm, 18 ft.*lbf)
NOTICE:
Tighten the bolts in the order shown in the illustration to install the cooler compressor.

56. INSTALL GENERATOR ASSEMBLY (See page CH-19)

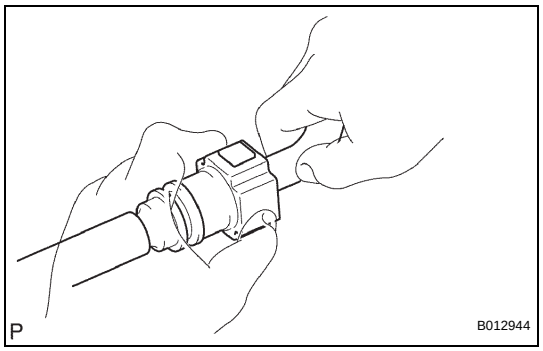

57. CONNECT FUEL TUBE SUB-ASSEMBLY
(a) Push in the fuel tube connector to the fuel pipe until the connector makes a "click" sound.
NOTICE:
- **Check for damage or contamination on the connected part of the pipe.**
- **Check if the pipe and the connector are securely connected by trying to pull them apart.**

(b) Install the No. 1 fuel pipe clamp.

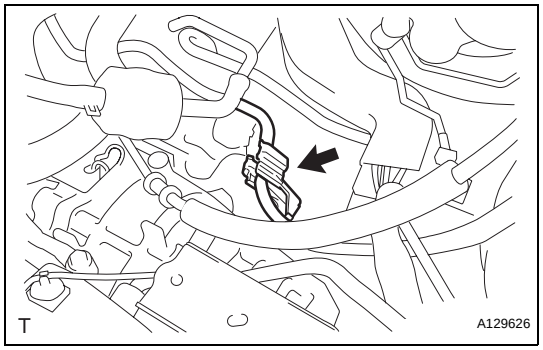

58. INSTALL CLUTCH RELEASE CYLINDER ASSEMBLY (for Manual Transaxle)
HINT:
See page CL-25.

59. REMOVE CLUTCH ACCUMULATOR ASSEMBLY (for Manual Transaxle)
HINT:
See page CL-29.

EM

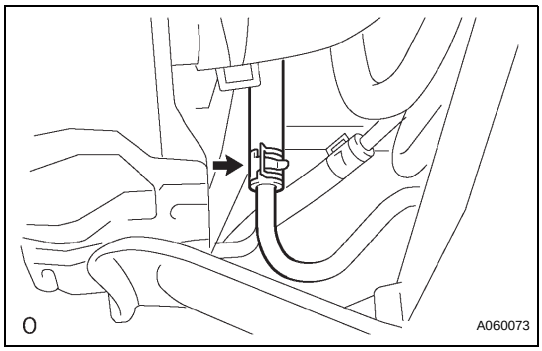

60. CONNECT RETURN TUBE SUB-ASSEMBLY

(a) Connect the return tube sub-assembly.

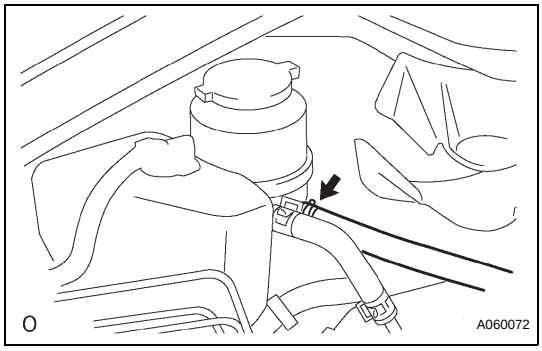

61. CONNECT NO. 1 OIL RESERVOIR TO PUMP HOSE

(a) Connect the No. 1 oil reservoir to pump hose.

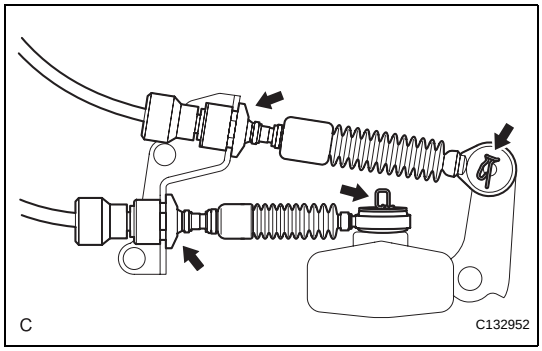

62. INSTALL TRANSMISSION CONTROL CABLE ASSEMBLY (for Manual Transaxle)

(a) Connect the ends of the 2 cables and install the 2 washers and 2 clips.

(b) Install 2 new clips to the control cable bracket.

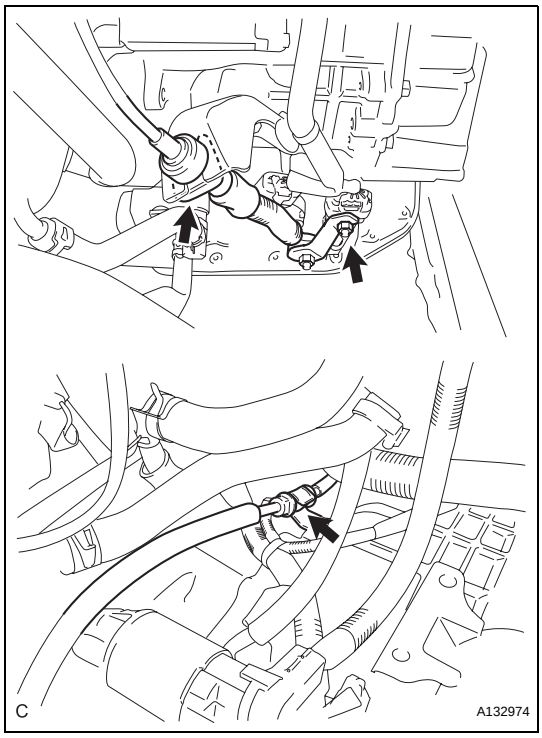

63. INSTALL TRANSMISSION CONTROL CABLE ASSEMBLY (for Automatic Transaxle)

(a) Install a new clip and nut, and connect the control lever.

Torque: 13 N*m (133 kgf*cm, 10 ft.*lbf)

(b) Connect the clamp with the cable to the transaxle.

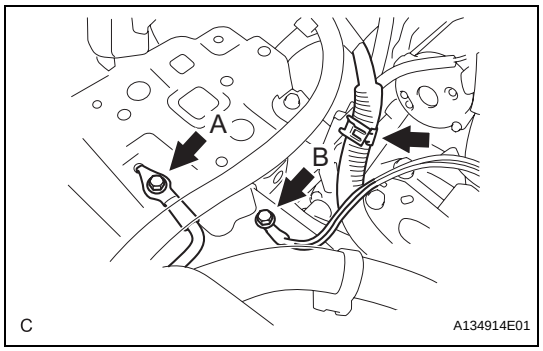

64. CONNECT ENGINE WIRE

(a) Install the 2 bolts and clamp to the body.
Torque: Bolt A
8.4 N*m (85 kgf*cm, 74 in.*lbf)
Bolt B
12 N*m (123 kgf*cm, 9 ft.*lbf)

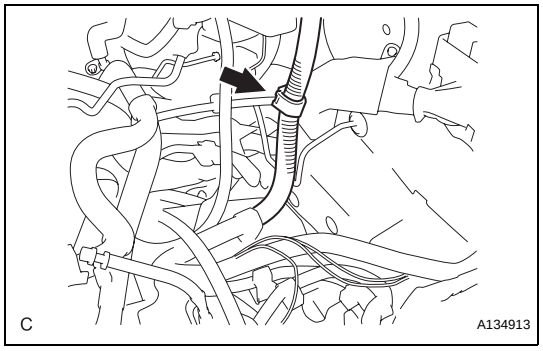

(b) Connect the clamp to the bracket.

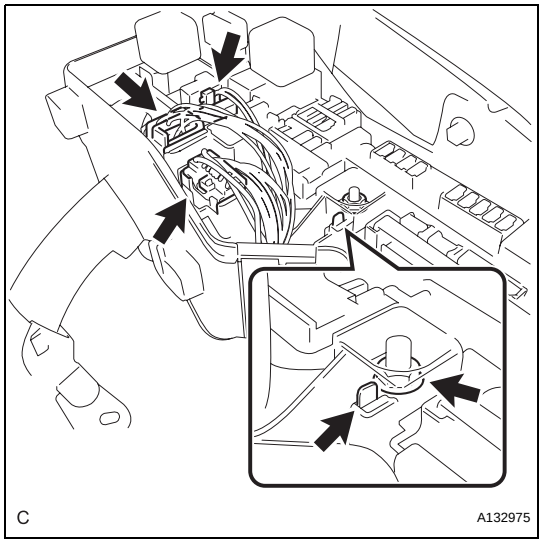

(c) Connect the wire to the engine room junction block. Then, install it with the nut and 3 connectors.
Torque: 8.4 N*m (85 kgf*cm, 74 in.*lbf)

65. INSTALL ECM

HINT:
See page ES-433.

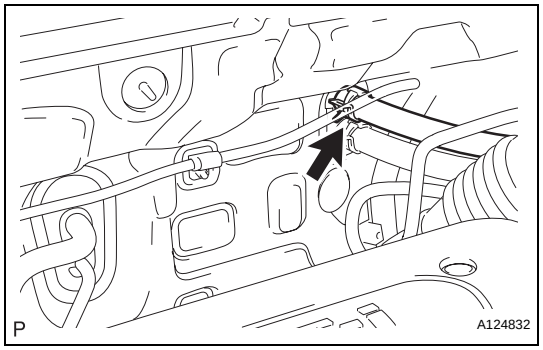

66. CONNECT HEATER INLET WATER HOSE

(a) Connect the heater inlet water hose.

EM

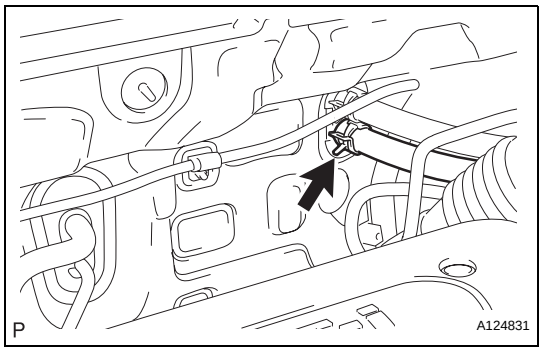

67. CONNECT HEATER OUTLET WATER HOSE

(a) Connect the heater outlet water hose.

68. CONNECT OIL COOLER INLET HOSE (See page CO-30)

69. CONNECT OIL COOLER OUTLET HOSE (See page CO-30)

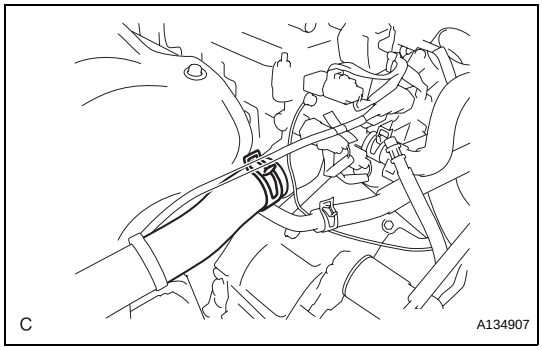

70. CONNECT RADIATOR HOSE INLET

(a) Install the clamp and connect the radiator hose inlet.

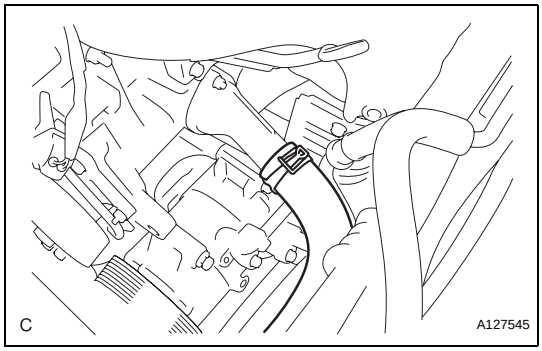

71. CONNECT RADIATOR HOSE OUTLET

(a) Install the clamp and connect the radiator hose outlet.

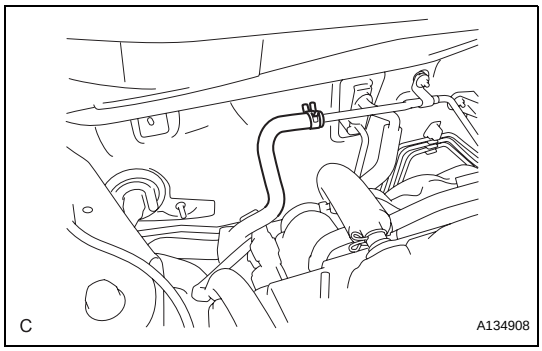

72. CONNECT NO. 1 VACUUM HOSE CONNECTOR

(a) Install the clamp and connect the vacuum hose connector.

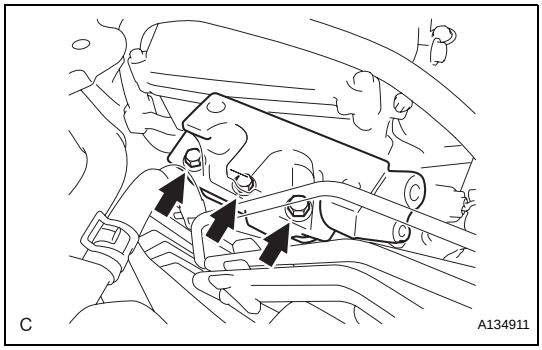

73. INSTALL NO. 2 ENGINE MOUNTING BRACKET RH

(a) Install the 3 bolts and No. 2 mounting bracket RH.
Torque: 52 N*m (531 kgf*cm, 38 ft.*lbf)

EM

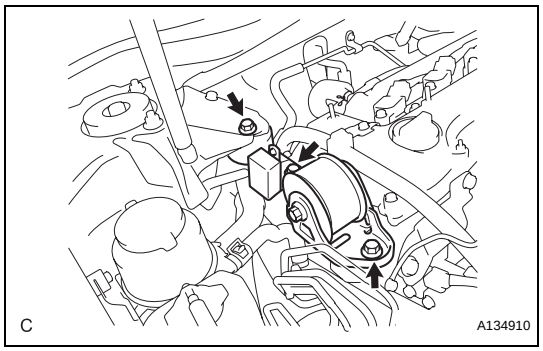

74. INSTALL ENGINE MOVING CONTROL ROD SUB-ASSEMBLY

(a) Install the engine moving control rod with the 3 bolts.
Torque: 64 N*m (653 kgf*cm, 47 ft.*lbf)

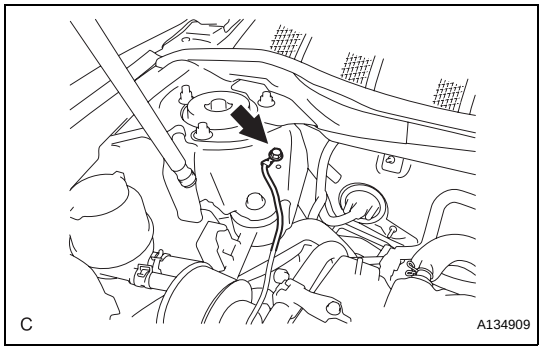

(b) Install the ground cable with the bolt.
Torque: 8.4 N*m (85 kgf*cm, 74 in.*lbf)

EM

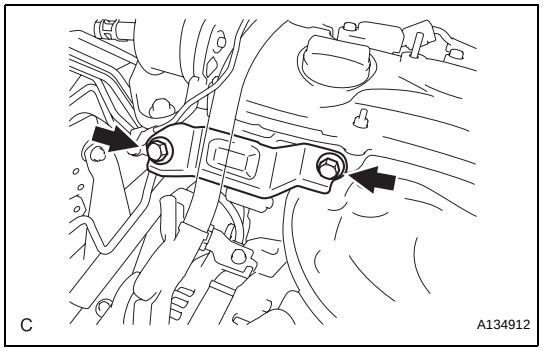

75. INSTALL NO. 2 ENGINE MOUNTING STAY RH

(a) Install the No. 2 mounting stay RH with the 2 bolts.
Torque: 64 N*m (653 kgf*cm, 47 ft.*lbf)

76. INSTALL BATTERY

(a) Install the battery and battery tray.

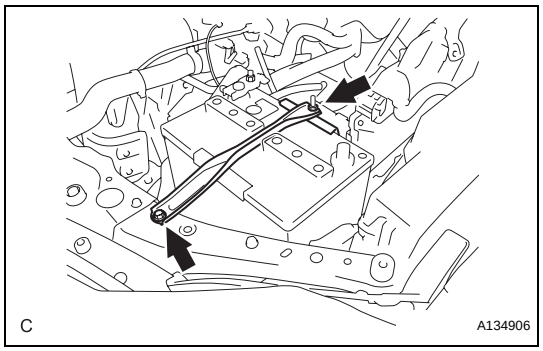

(b) Install the battery clamp with the bolt and nut.
Torque: Bolt
9.0 N*m (92 kgf*cm, 80 in.*lbf)
Nut
3.5 N*m (36 kgf*cm, 31 in.*lbf)

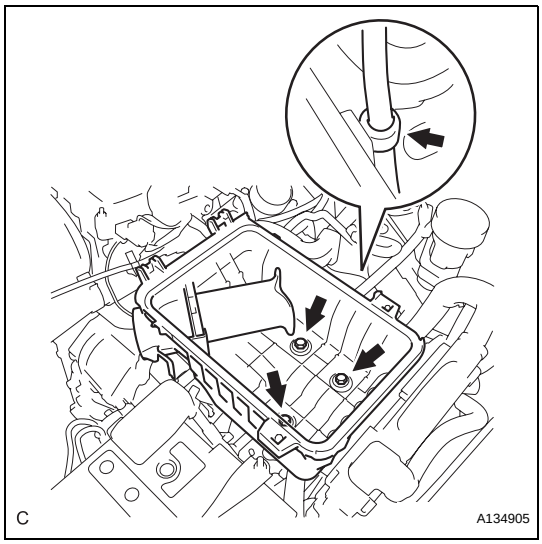

77. INSTALL AIR CLEANER CASE SUB-ASSEMBLY
(a) Install the air cleaner case with the 3 bolts.
Torque: 5.0 N*m (51 kgf*cm, 44 in.*lbf)
(b) Connect the hose clamp.

78. INSTALL AIR CLEANER CAP SUB-ASSEMBLY (See page ES-419)

EM

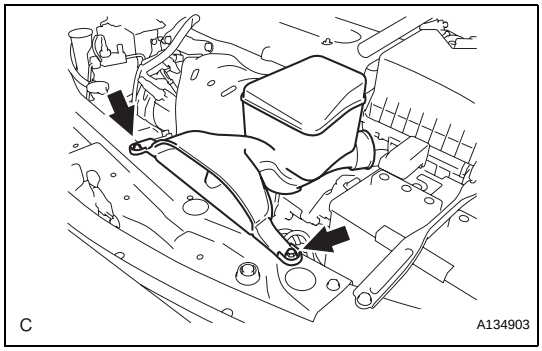

79. INSTALL AIR CLEANER INLET ASSEMBLY
(a) Install the air cleaner inlet with the 2 bolts.
Torque: 5.0 N*m (51 kgf*cm, 44 in.*lbf)

80. INSTALL V-RIBBED BELT (See page EM-6)

81. INSTALL COWL TOP PANEL OUTER SUB-ASSEMBLY (See page ES-426)

82. INSTALL WINDSHIELD WIPER LINK ASSEMBLY
HINT:
See page WW-13.

83. INSTALL FRONT WHEEL
Torque: 103 N*m (1,050 kgf*cm, 76 ft.*lbf)

84. ADD ENGINE OIL

85. CONNECT CABLE TO NEGATIVE BATTERY TERMINAL
Torque: 6.9 N*m (70 kgf*cm, 61 in.*lbf)

86. BLEED CLUTCH LINE (for Manual Transaxle) (See page CL-25)

87. ADD ENGINE COOLANT (See page CO-5)

88. ADD MANUAL TRANSAXLE OIL (for Manual Transaxle) (See page MX-6)

89. ADD AUTOMATIC TRANSAXLE FLUID (for Automatic Transaxle) (See page AX-175)

90. ADD POWER STEERING FLUID

91. BLEED POWER STEERING FLUID (See page PS-7)

92. CHECK FOR FUEL LEAKS (See page FU-9)

93. CHECK FOR ENGINE OIL LEAKS

94. CHECK FOR ENGINE COOLANT LEAKS (See page CO-1)

95. CHECK FOR EXHAUST GAS LEAKS

96. CHECK SHIFT LEVER POSITION (See page AX-179)

97. ADJUST FRONT WHEEL ALIGNMENT

HINT:

See page SP-4.

98. CHECK IGNITION TIMING (See page EM-1)

99. CHECK ENGINE IDLE SPEED (See page EM-2)

100. INSPECT CO/HC (See page EM-3)

101. INSTALL FRONT FENDER APRON SEAL RH

102. INSTALL ENGINE UNDER COVER LH

103. INSTALL ENGINE UNDER COVER RH

104. INSTALL NO. 1 ENGINE COVER SUB-ASSEMBLY

(a) Install the engine cover with the 2 nuts.
Torque: 9.0 N*m (92 kgf*cm, 80 in.*lbf)

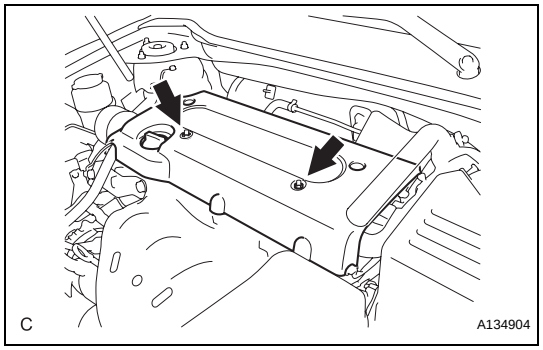

105. CHECK ABS SPEED SENSOR SIGNAL

(a) ABS: See page BC-11.
(b) VSC (for BOSCH): See page BC-123.
(c) VSC (for ADVICS): See page BC-290.

ENGINE UNIT

COMPONENTS

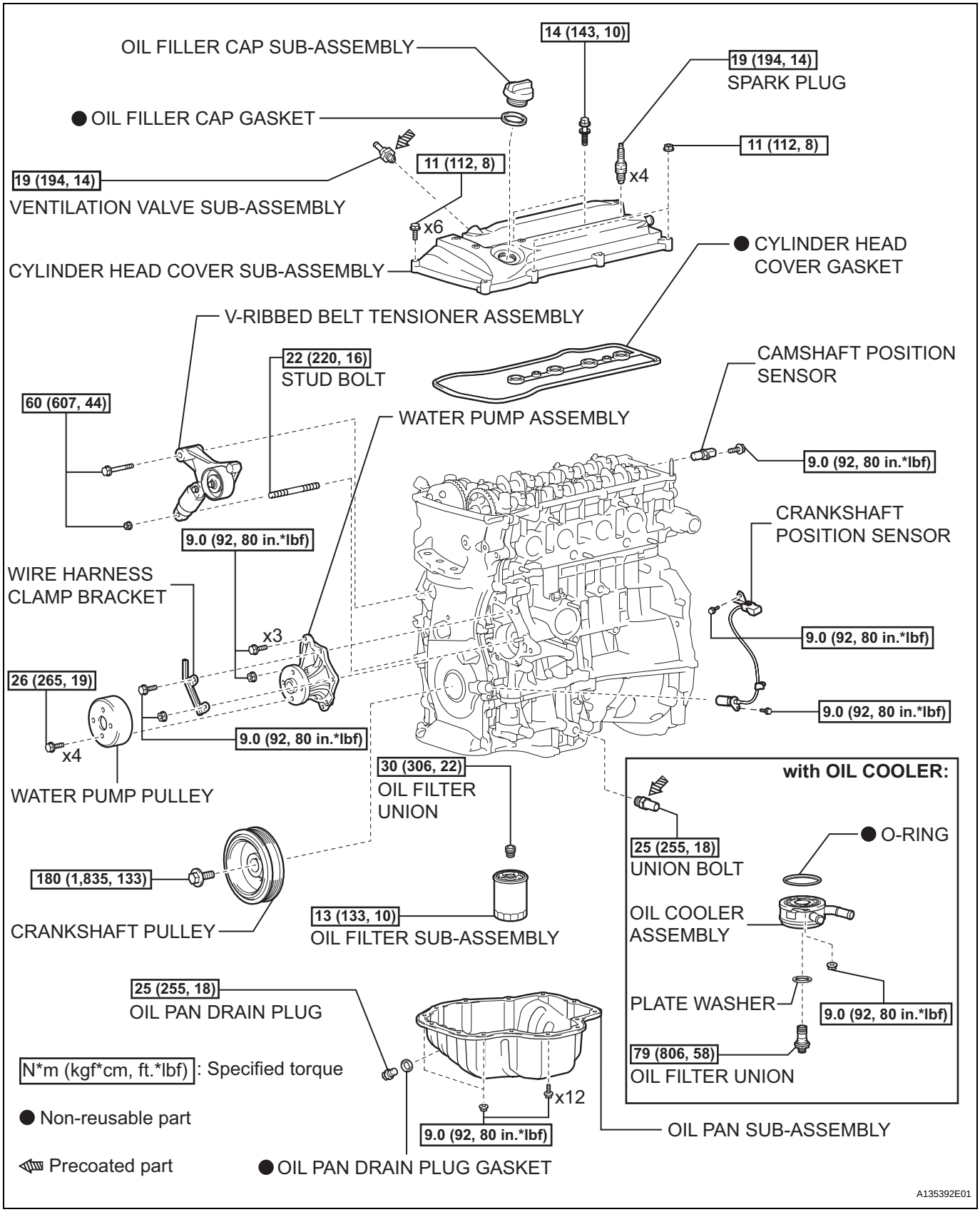

EM

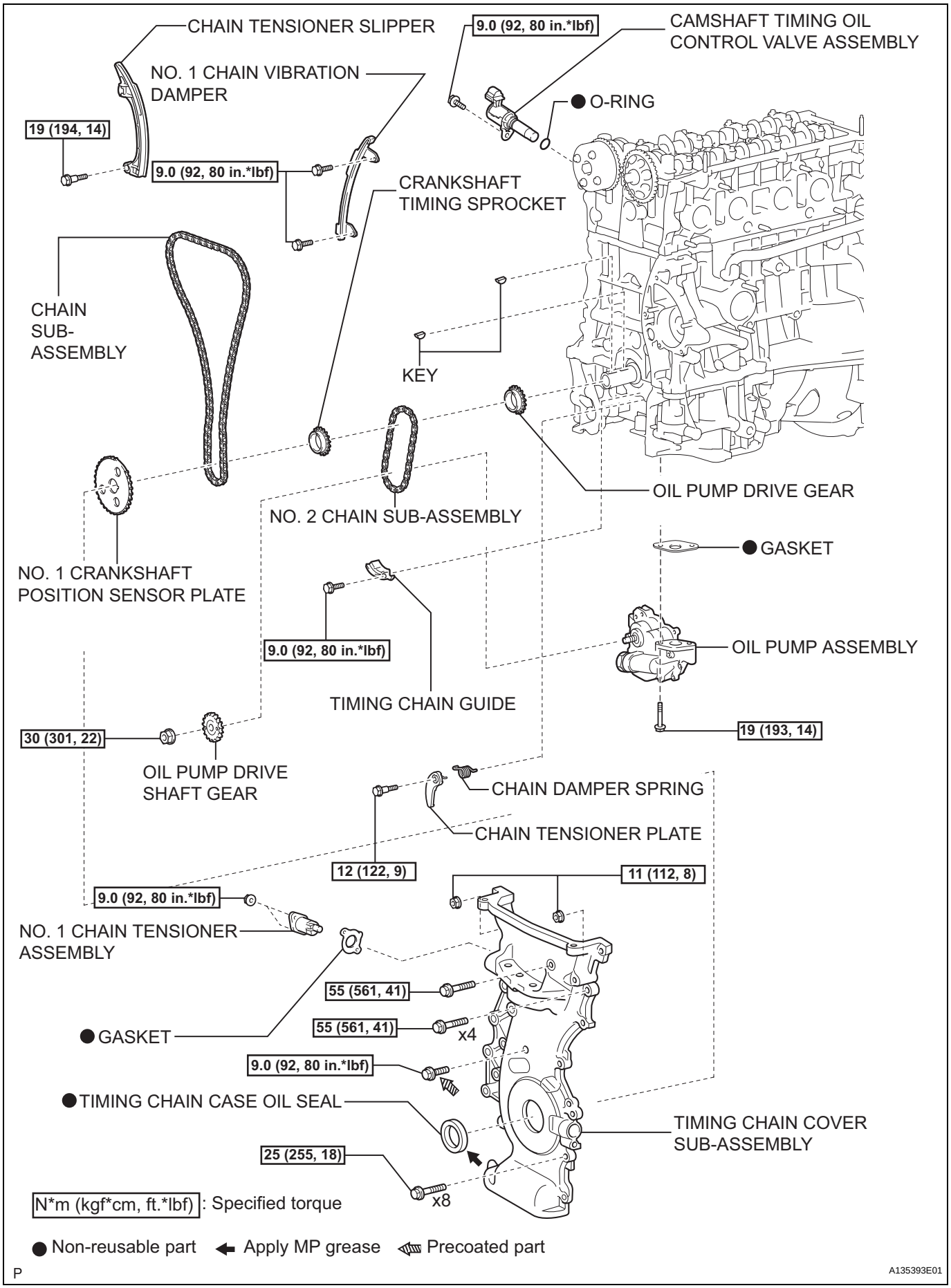
CHAIN TENSIONER SLIPPER
9.0 (92, 80 in.*lbf)
CAMSHAFT TIMING OIL CONTROL VALVE ASSEMBLY
NO. 1 CHAIN VIBRATION DAMPER
● O-RING
19 (194, 14)
9.0 (92, 80 in.*lbf)
CRANKSHAFT TIMING SPROCKET
CHAIN SUB-ASSEMBLY
KEY
OIL PUMP DRIVE GEAR
NO. 2 CHAIN SUB-ASSEMBLY
● GASKET
NO. 1 CRANKSHAFT POSITION SENSOR PLATE
9.0 (92, 80 in.*lbf)
OIL PUMP ASSEMBLY
TIMING CHAIN GUIDE
19 (193, 14)
30 (301, 22)
OIL PUMP DRIVE SHAFT GEAR
CHAIN DAMPER SPRING
CHAIN TENSIONER PLATE
12 (122, 9)
11 (112, 8)
9.0 (92, 80 in.*lbf)
NO. 1 CHAIN TENSIONER ASSEMBLY
55 (561, 41)
● GASKET
55 (561, 41)
x4
9.0 (92, 80 in.*lbf)
● TIMING CHAIN CASE OIL SEAL
TIMING CHAIN COVER SUB-ASSEMBLY
25 (255, 18)
x8
N*m (kgf*cm, ft.*lbf): Specified torque
● Non-reusable part
Apply MP grease
Precoated part
P
A135393E01

EM

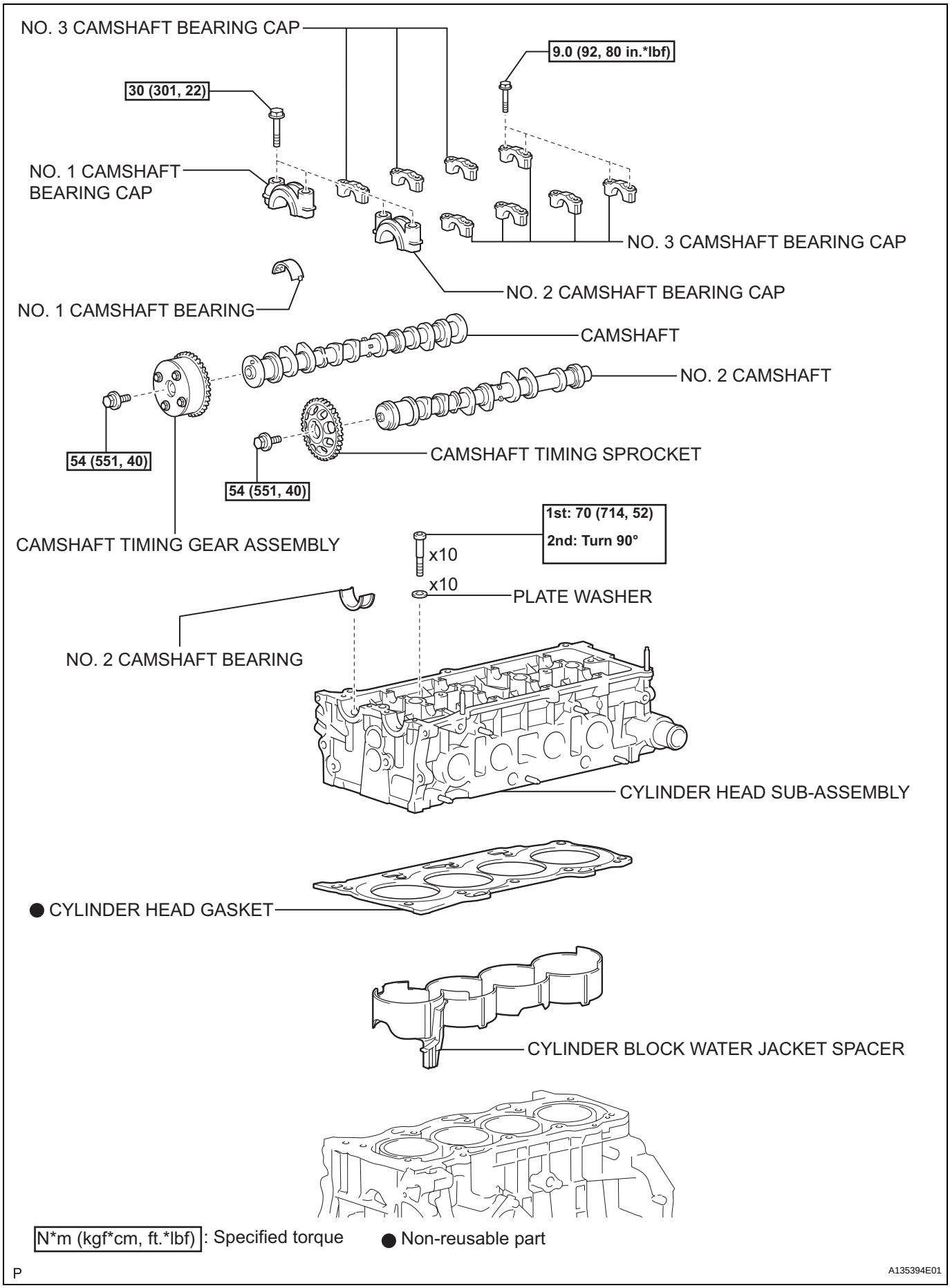
NO. 3 CAMSHAFT BEARING CAP
9.0 (92, 80 in.*lbf)
30 (301, 22)
NO. 1 CAMSHAFT BEARING CAP
NO. 3 CAMSHAFT BEARING CAP
NO. 2 CAMSHAFT BEARING CAP
NO. 1 CAMSHAFT BEARING
CAMSHAFT
NO. 2 CAMSHAFT
54 (551, 40)
CAMSHAFT TIMING SPROCKET
54 (551, 40)
1st: 70 (714, 52)
2nd: Turn 90°
CAMSHAFT TIMING GEAR ASSEMBLY
x10
x10
PLATE WASHER
NO. 2 CAMSHAFT BEARING
CYLINDER HEAD SUB-ASSEMBLY
● CYLINDER HEAD GASKET
CYLINDER BLOCK WATER JACKET SPACER
N*m (kgf*cm, ft.*lbf) : Specified torque
● Non-reusable part
P
A135394E01

EM

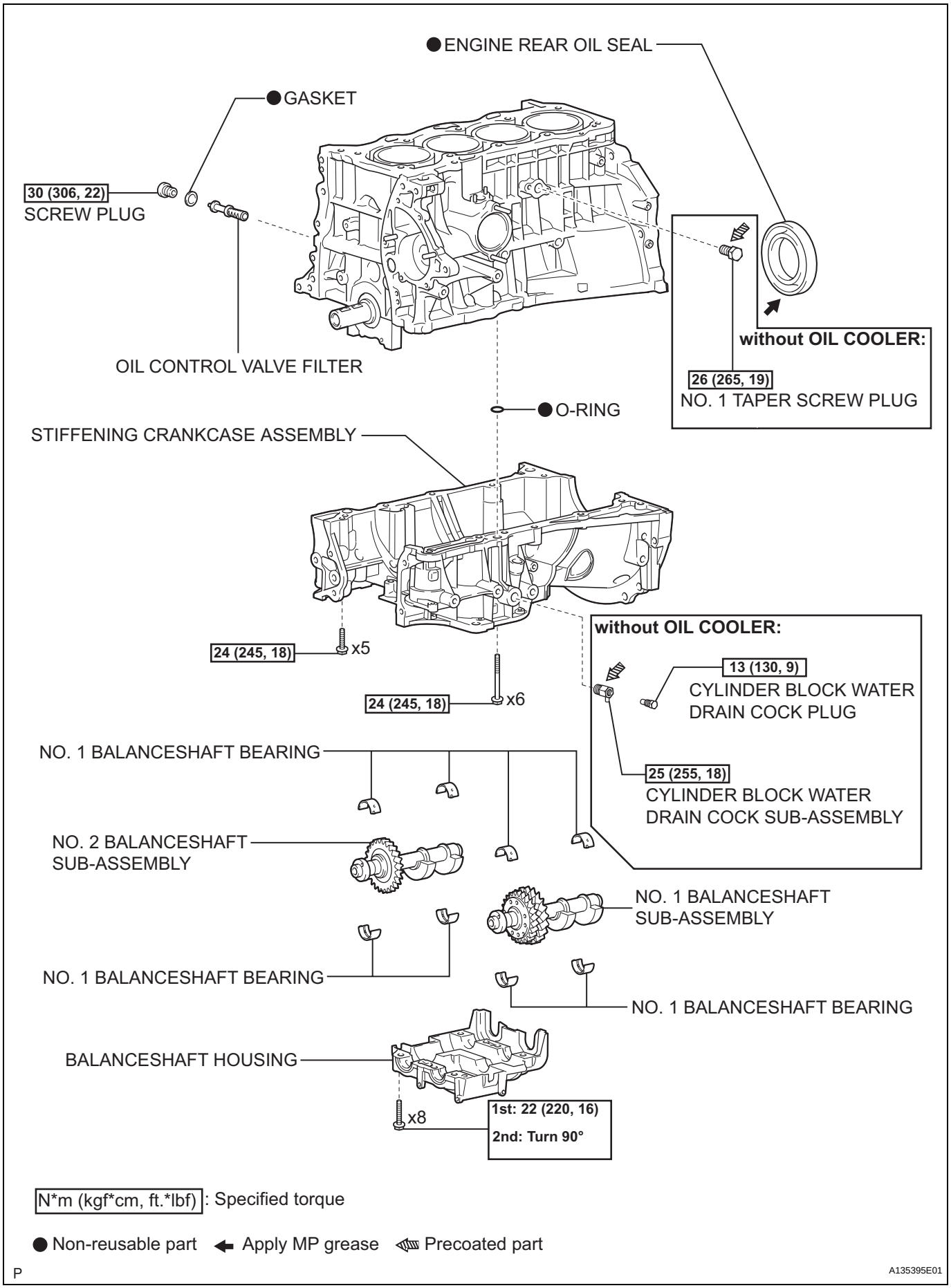
● ENGINE REAR OIL SEAL
● GASKET
30 (306, 22)
SCREW PLUG
OIL CONTROL VALVE FILTER
without OIL COOLER:
26 (265, 19)
NO. 1 TAPER SCREW PLUG
● O-RING
STIFFENING CRANKCASE ASSEMBLY
24 (245, 18)
x5
24 (245, 18)
x6
without OIL COOLER:
13 (130, 9)
CYLINDER BLOCK WATER DRAIN COCK PLUG
25 (255, 18)
CYLINDER BLOCK WATER DRAIN COCK SUB-ASSEMBLY
NO. 1 BALANCESHAFT BEARING
NO. 2 BALANCESHAFT SUB-ASSEMBLY
NO. 1 BALANCESHAFT SUB-ASSEMBLY
NO. 1 BALANCESHAFT BEARING
NO. 1 BALANCESHAFT BEARING
BALANCESHAFT HOUSING
x8
1st: 22 (220, 16)
2nd: Turn 90°
N*m (kgf*cm, ft.*lbf) : Specified torque
● Non-reusable part
Apply MP grease
Precoated part
P
A135395E01

EM

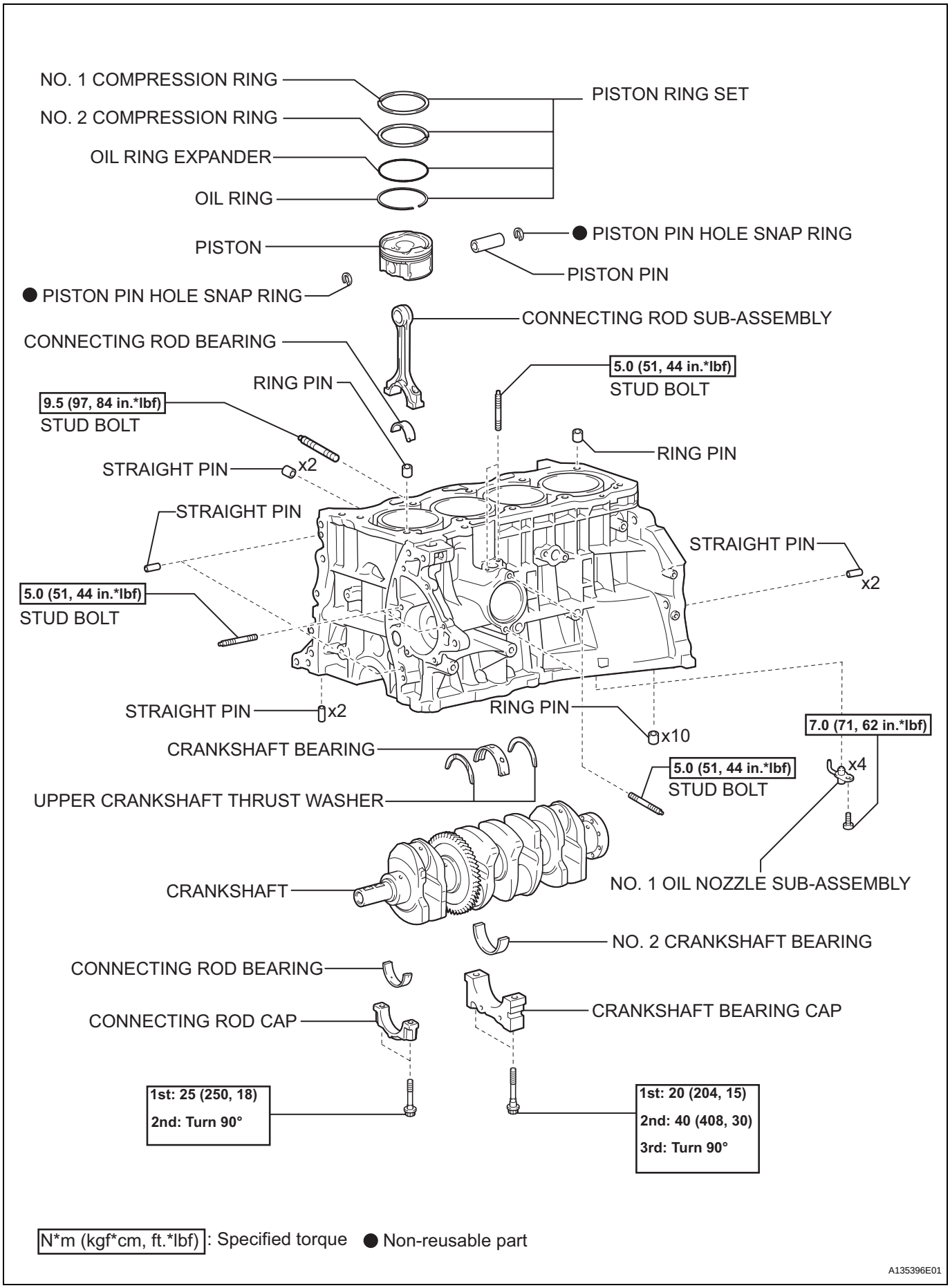
NO. 1 COMPRESSION RING
NO. 2 COMPRESSION RING
OIL RING EXPANDER
OIL RING
PISTON RING SET
PISTON
● PISTON PIN HOLE SNAP RING
PISTON PIN
● PISTON PIN HOLE SNAP RING
CONNECTING ROD SUB-ASSEMBLY
CONNECTING ROD BEARING
RING PIN
5.0 (51, 44 in.*lbf)
STUD BOLT
9.5 (97, 84 in.*lbf)
STUD BOLT
RING PIN
STRAIGHT PIN
x2
STRAIGHT PIN
STRAIGHT PIN
x2
5.0 (51, 44 in.*lbf)
STUD BOLT
STRAIGHT PIN
x2
RING PIN
x10
7.0 (71, 62 in.*lbf)
CRANKSHAFT BEARING
5.0 (51, 44 in.*lbf)
STUD BOLT
x4
UPPER CRANKSHAFT THRUST WASHER
CRANKSHAFT
NO. 1 OIL NOZZLE SUB-ASSEMBLY
NO. 2 CRANKSHAFT BEARING
CONNECTING ROD BEARING
CRANKSHAFT BEARING CAP
CONNECTING ROD CAP
1st: 25 (250, 18)
2nd: Turn 90°
1st: 20 (204, 15)
2nd: 40 (408, 30)
3rd: Turn 90°
N*m (kgf*cm, ft.*lbf): Specified torque
● Non-reusable part
A135396E01

EM

DISASSEMBLY

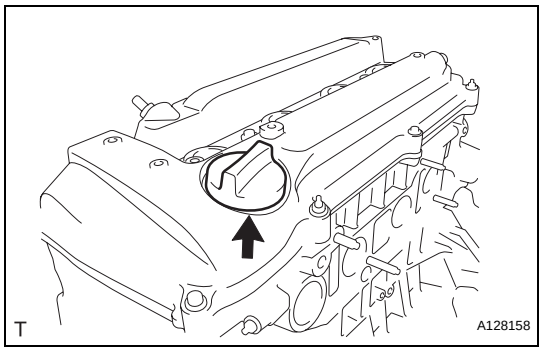

1. REMOVE OIL FILLER CAP SUB-ASSEMBLY

(a) Remove the oil filler cap.

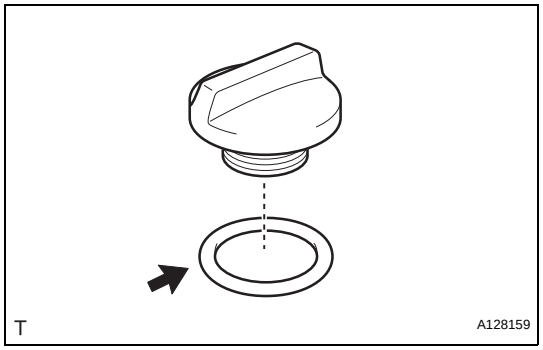

2. REMOVE OIL FILLER CAP GASKET

(a) Remove the oil filler cap gasket.

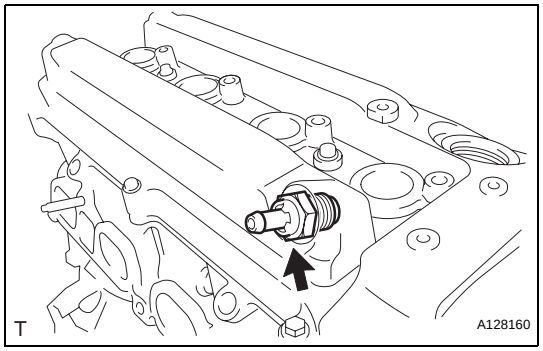

3. REMOVE VENTILATION VALVE SUB-ASSEMBLY

(a) Remove the ventilation valve.

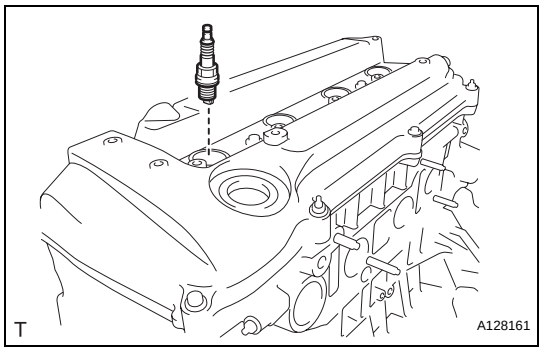

4. REMOVE SPARK PLUG

(a) Remove the spark plugs.

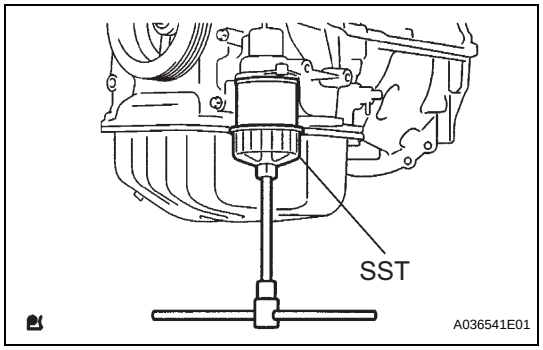

5. REMOVE OIL FILTER SUB-ASSEMBLY

(a) Using SST, remove the oil filter.
SST 09228-06501
HINT:
Place a container for oil to be drained before removing the oil filter.

EM

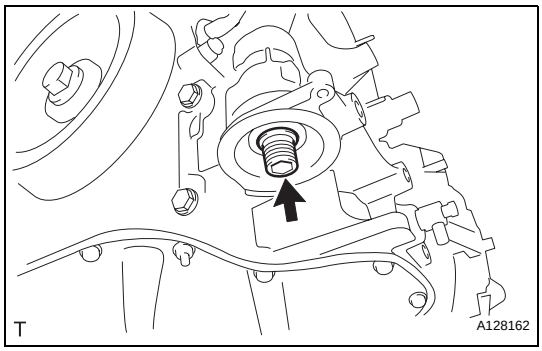

6. REMOVE OIL FILTER UNION (w/o Oil Cooler)
(a) Using a 12 mm hexagon wrench, remove the union.

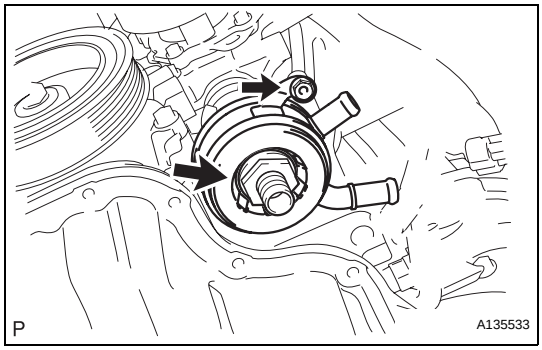

7. REMOVE OIL COOLER ASSEMBLY (w/ Oil Cooler)
(a) Remove the oil filter union, plate washer, nut, oil cooler and O-ring.
(b) Remove the union bolt.

8. REMOVE CYLINDER HEAD COVER SUB-ASSEMBLY (See page EM-21)

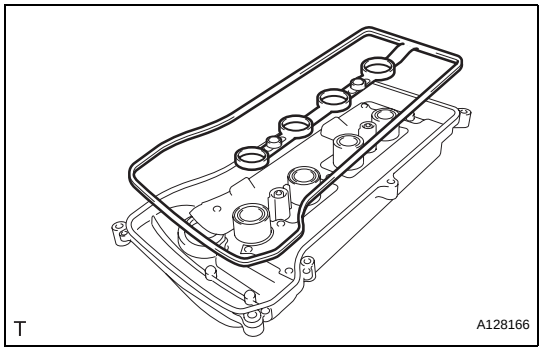

9. REMOVE CYLINDER HEAD COVER GASKET
(a) Remove the cylinder head cover gasket.

10. REMOVE V-RIBBED BELT TENSIONER ASSEMBLY (See page EM-23)

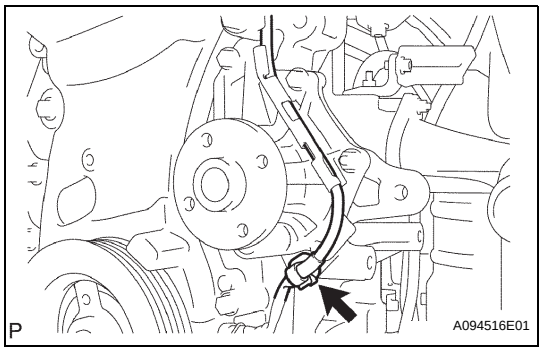

11. REMOVE CRANKSHAFT POSITION SENSOR
(a) Remove the wire harness clamp.
(b) Separate the wire harness from the wire harness clamp bracket.

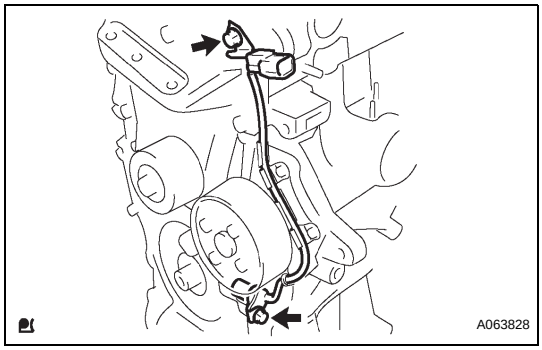

(c) Remove the 2 bolts and sensor.

EM

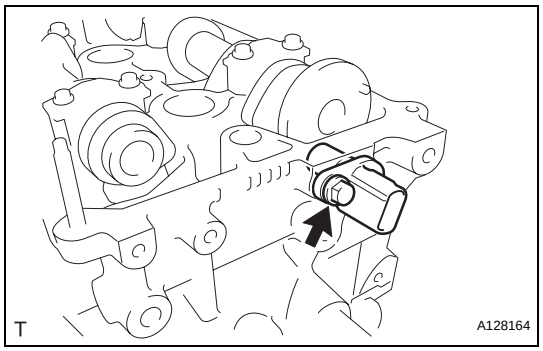

12. REMOVE CAMSHAFT POSITION SENSOR
(a) Remove the bolt and sensor.

13. REMOVE CRANKSHAFT PULLEY (See page EM-75)

14. REMOVE CAMSHAFT TIMING OIL CONTROL VALVE ASSEMBLY (See page ES-405)

15. REMOVE NO. 1 CHAIN TENSIONER ASSEMBLY (See page EM-22)

16. REMOVE WATER PUMP PULLEY (See page CO-9)

17. REMOVE WATER PUMP ASSEMBLY (See page CO-9)

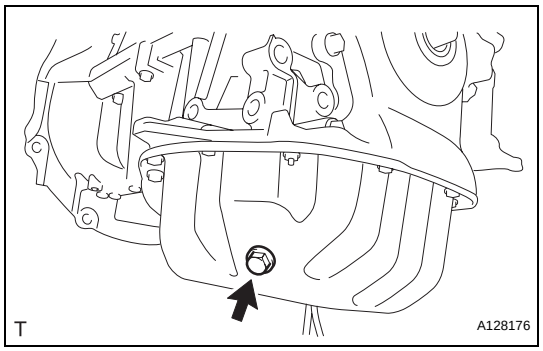

18. REMOVE OIL PAN DRAIN PLUG
(a) Remove the oil pan drain plug and gasket.

19. REMOVE OIL PAN SUB-ASSEMBLY (See page EM-22)

20. REMOVE TIMING CHAIN COVER SUB-ASSEMBLY (See page LU-11)

EM

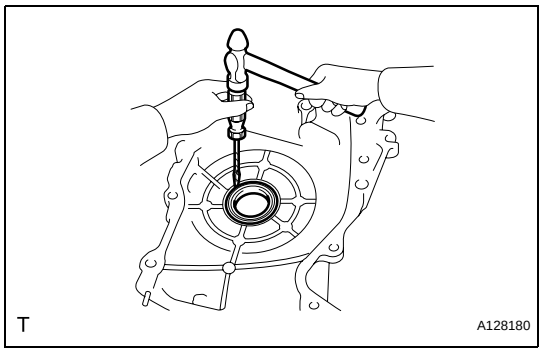

21. REMOVE TIMING CHAIN CASE OIL SEAL
(a) Using a screwdriver and a hammer, remove the oil seal.

22. REMOVE NO. 1 CRANKSHAFT POSITION SENSOR PLATE (See page EM-24)

23. REMOVE TIMING CHAIN GUIDE (See page EM-25)

24. REMOVE CHAIN TENSIONER SLIPPER (See page EM-24)

25. REMOVE NO. 1 CHAIN VIBRATION DAMPER (See page EM-24)

26. REMOVE CHAIN SUB-ASSEMBLY (See page EM-25)

27. REMOVE CRANKSHAFT TIMING SPROCKET (See page EM-25)

28. REMOVE NO. 2 CHAIN SUB-ASSEMBLY (See page EM-25)

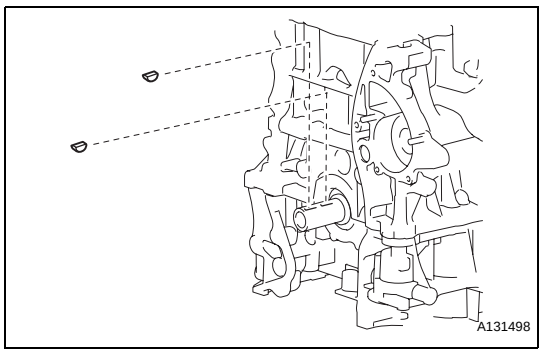

29. REMOVE KEYS
(a) Remove the 2 pulley set keys from the crankshaft.

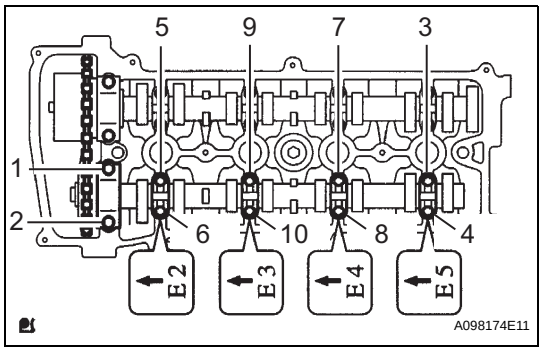

30. REMOVE NO. 2 CAMSHAFT

(a) Using several steps, uniformly loosen and remove the 10 bearing cap bolts in the sequence shown in the illustration.

(b) Remove the 5 bearing caps.

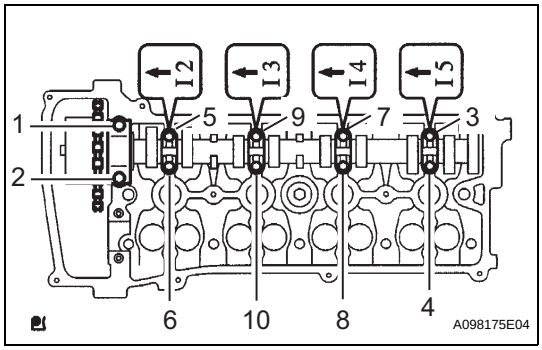

31. REMOVE CAMSHAFT

(a) Using several steps, uniformly loosen and remove the 10 bearing cap bolts in the sequence shown in the illustration.

(b) Remove the 5 bearing caps.

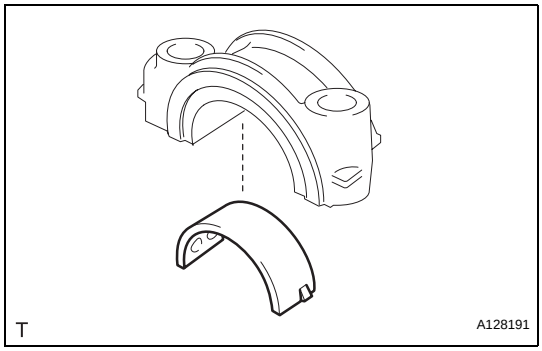

32. REMOVE NO. 1 CAMSHAFT BEARING

Remove the No. 1 camshaft bearing.

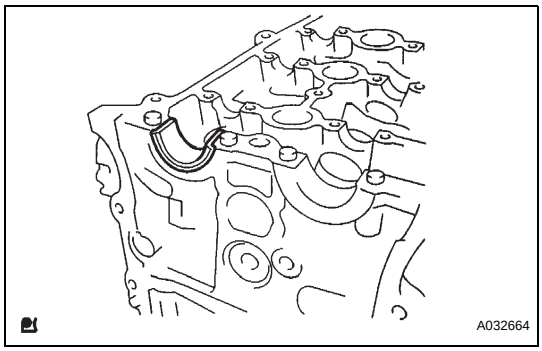

33. REMOVE NO. 2 CAMSHAFT BEARING

(a) Remove the No. 2 camshaft bearing.

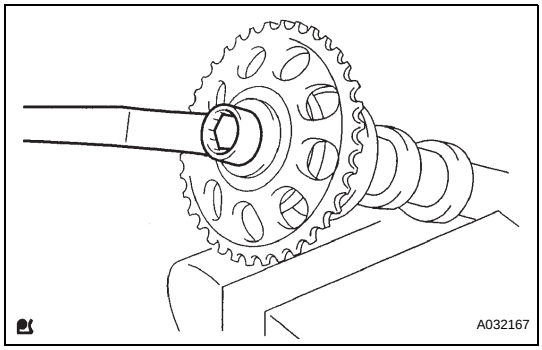

34. REMOVE CAMSHAFT TIMING SPROCKET

(a) Clamp the camshaft in a vise.

(b) Remove the flange bolt of the camshaft timing sprocket.

35. REMOVE CAMSHAFT TIMING GEAR ASSEMBLY (See page EM-39)

36. REMOVE CYLINDER HEAD SUB-ASSEMBLY (See page EM-55)

37. REMOVE CYLINDER HEAD GASKET (See page EM-55)

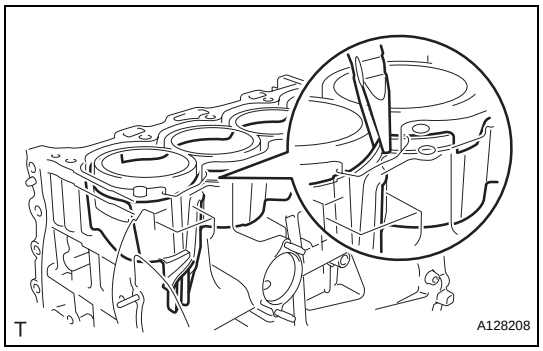

38. REMOVE CYLINDER BLOCK WATER JACKET SPACER

(a) Using needle-nose pliers, remove the cylinder block water jacket spacer.

NOTICE:

Be sure to remove the water jacket spacer if turning the cylinder block upside down.

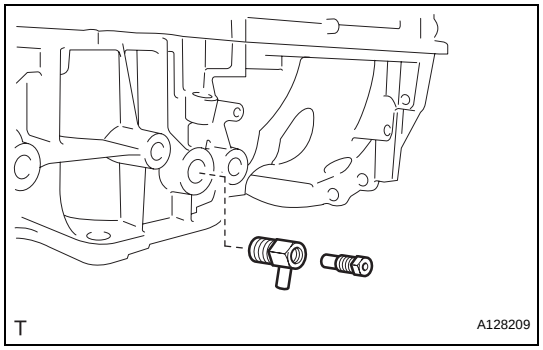

39. REMOVE CYLINDER BLOCK WATER DRAIN COCK SUB-ASSEMBLY (w/o Oil Cooler)

(a) Remove the water drain cock from the stiffening crankcase.

(b) Remove the water drain cock plug from the water drain cocks.

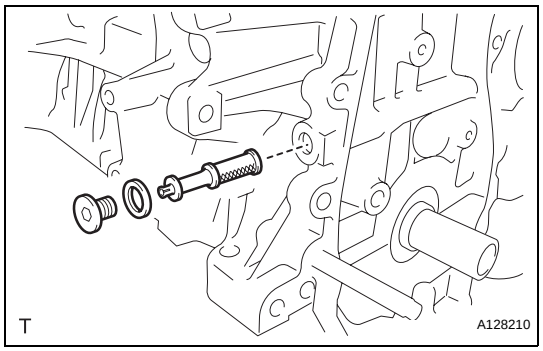

40. REMOVE OIL CONTROL VALVE FILTER

(a) Using an 8 mm socket hexagon wrench, remove the plug and filter.

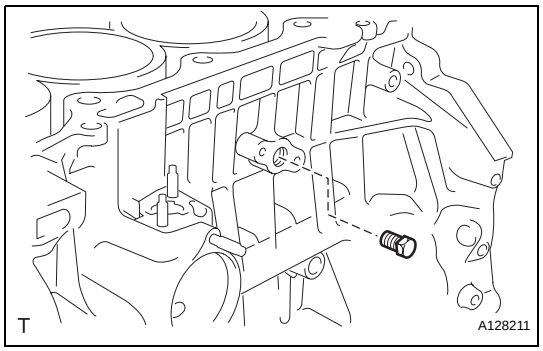

41. REMOVE NO. 1 TAPER SCREW PLUG (w/o Oil Cooler)

(a) Remove the taper screw plug.

EM

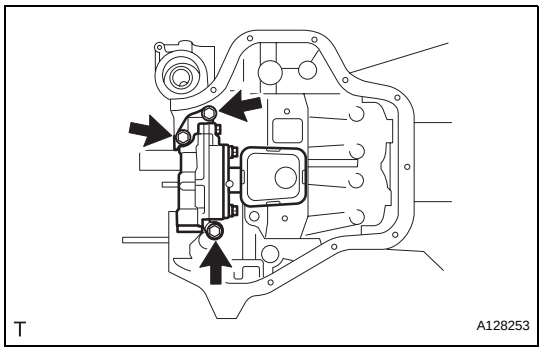

42. REMOVE OIL PUMP ASSEMBLY

(a) Remove the 3 bolts, oil pump and gasket.

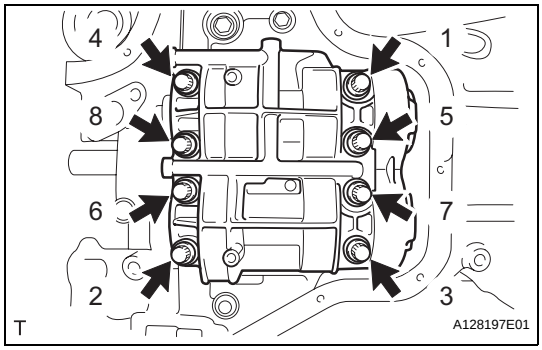

43. REMOVE NO. 1 AND NO. 2 BALANCESHAFT SUB-ASSEMBLY

(a) Uniformly loosen and remove the 8 bolts in the sequence shown in the illustration.

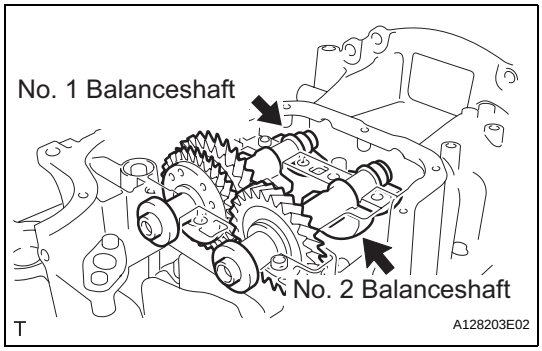

(b) Remove the No. 1 and No. 2 balanceshafts.

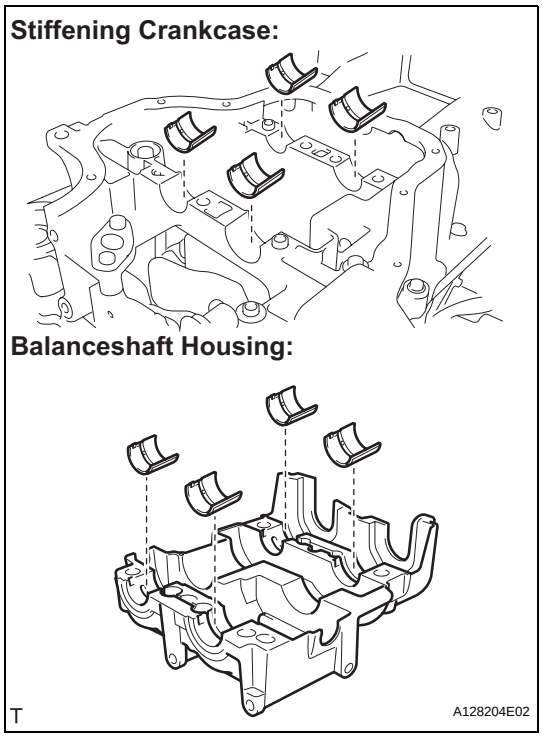

44. REMOVE NO. 1 BALANCESHAFT BEARING

(a) Remove the balanceshaft bearings.

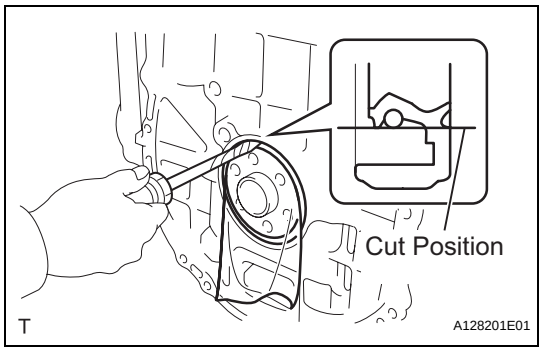

45. REMOVE ENGINE REAR OIL SEAL

(a) Using a knife, cut off the oil seal lip.

(b) Using a screwdriver with its tip taped, pry out the oil seal.

NOTICE:

After removing the oil seal, check the crankshaft for damage. If it is damaged, smooth the surface with 400-grit sandpaper.

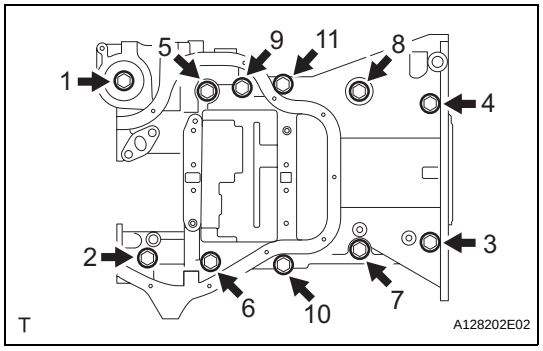

46. REMOVE STIFFENING CRANKCASE ASSEMBLY

(a) Uniformly loosen and remove the 11 bolts in the sequence shown in the illustration.

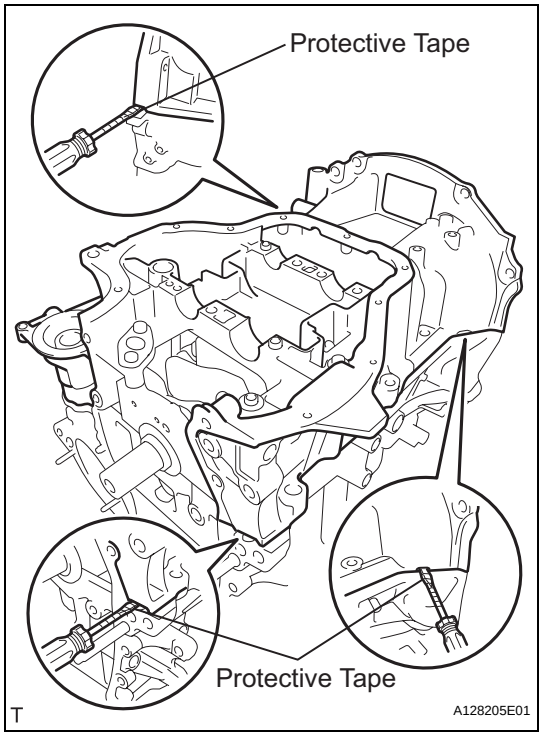

(b) Using a screwdriver, remove the crankcase by prying between the crankcase and cylinder block.

NOTICE:

Be careful not to damage the contact surfaces of the crankcase and cylinder block.

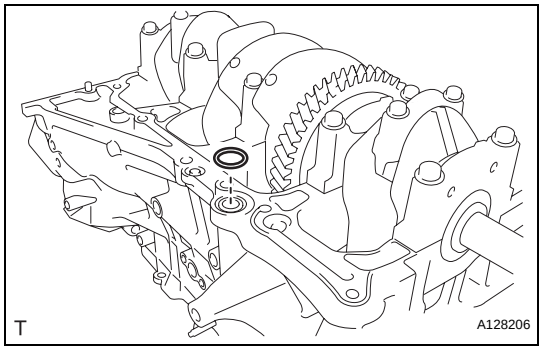

(c) Remove the O-ring from the cylinder block.

EM

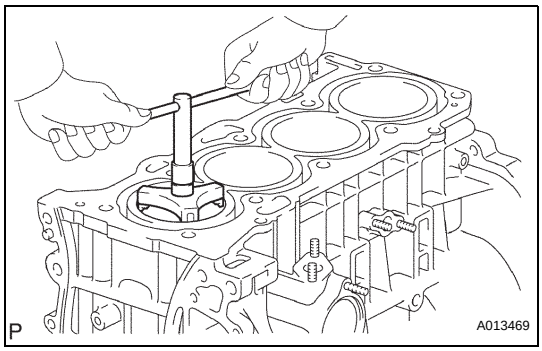

47. REMOVE PISTON SUB-ASSEMBLY WITH CONNECTING ROD

(a) Using a ridge reamer, remove all the carbon from the top of the cylinder.

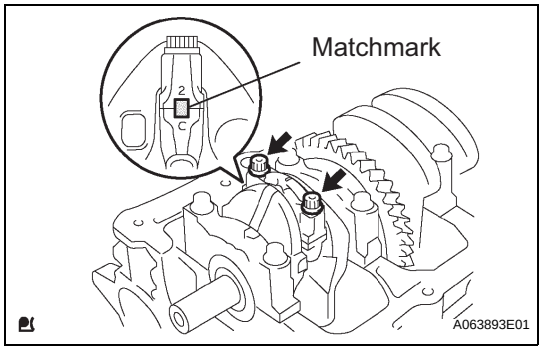

(b) Check that the matchmarks on the connecting rod and cap are aligned to ensure the correct reassembly.
HINT:
The matchmarks on the connecting rods and caps are provided for ensuring the correct reassembly.

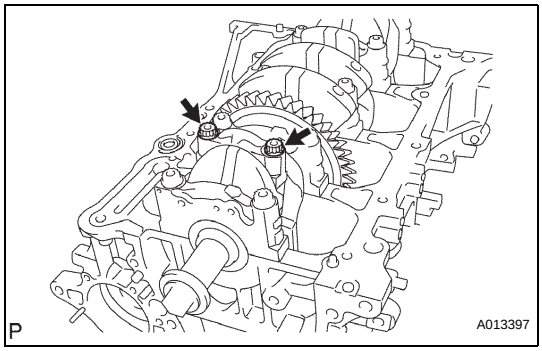

(c) Using a 12 mm socket wrench, uniformly loosen the 2 bolts.

(d) Using the 2 removed connecting rod cap bolts, remove the connecting rod cap and lower bearing by wiggling the connecting rod cap right and left.
HINT:
Keep the lower bearing inserted in the connecting rod cap.

(e) Push the piston, connecting rod assembly and upper bearing through the top of the cylinder block.
HINT:
- Keep the bearing, connecting rod and cap together.
- Arrange the piston and connecting rod assemblies in the correct order.

48. REMOVE CONNECTING ROD BEARING

(a) Remove the connecting rod bearings.
HINT:
Arrange the removed parts in the correct order.

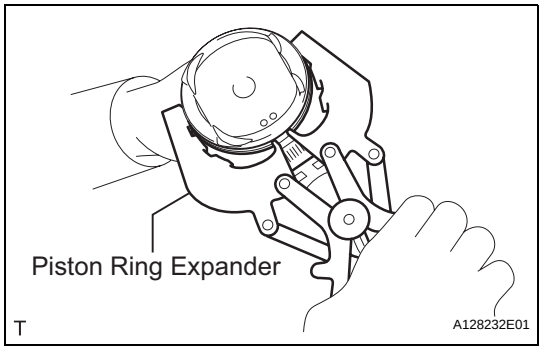

49. REMOVE PISTON RING SET

(a) Using a piston ring expander, remove the 2 compression rings.

(b) Remove the oil ring rail and oil ring expander by hand.
HINT:
Arrange the removed parts in the correct order.

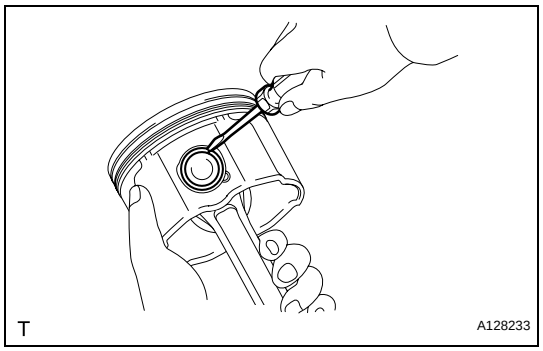

50. REMOVE PISTON PIN HOLE SNAP RING

(a) Using a screwdriver, pry out the 2 snap rings.

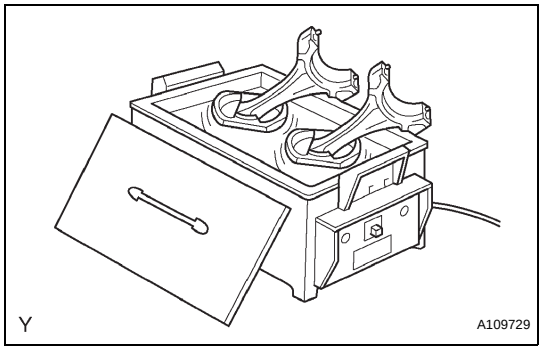

51. REMOVE PISTON

(a) Gradually heat the piston to approximately 80 to 90°C (176 to 194°F).

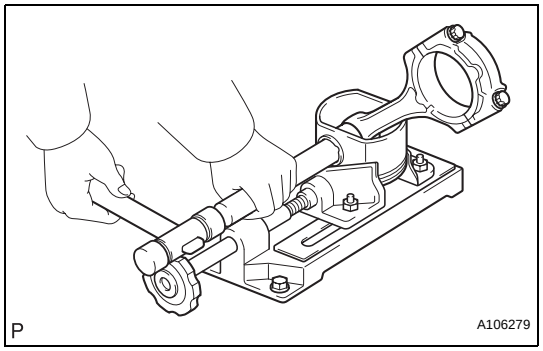

(b) Using a plastic hammer and brass bar, lightly tap out the piston pin and remove the connecting rod.
HINT:
- The piston and pin are a matched set.
- Arrange the pistons, pins, rings, connecting rods and bearings in the correct order.

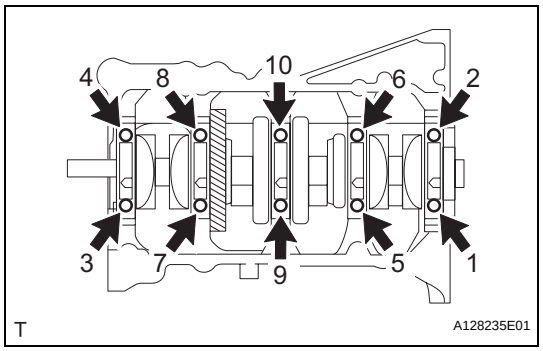

52. REMOVE CRANKSHAFT

(a) Uniformly loosen and remove the 10 main bearing cap bolts in the sequence shown in the illustration.

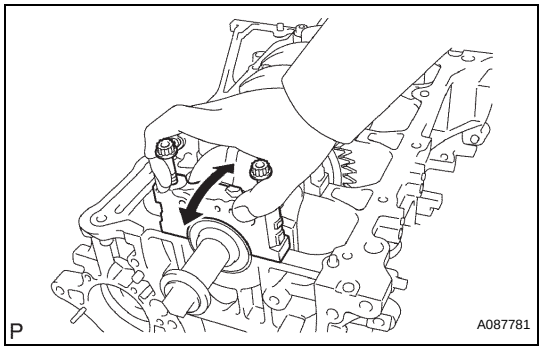

(b) Use 2 removed main bearing cap bolts to remove the 5 main bearing caps and 5 lower bearings.
NOTICE:
Insert the bolts into one of the caps. Ease the cap out by gently pulling up and applying force toward the front and back side of the cylinder block, as shown in the illustration. Take care not to damage the contact surfaces of the cap and cylinder block.

HINT:
- Keep the lower bearing and main bearing cap together.
- Arrange the main bearing caps in the correct order.

(c) Lift out the crankshaft.

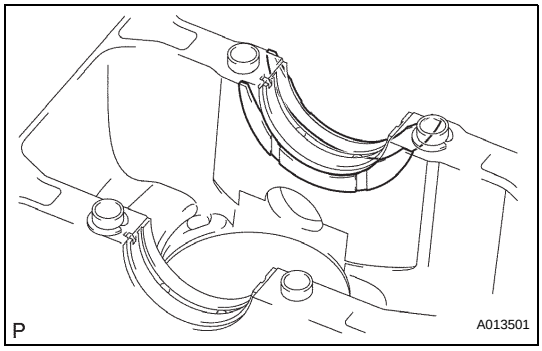

53. REMOVE UPPER CRANKSHAFT THRUST WASHER

(a) Remove the upper thrust washers from the cylinder block.

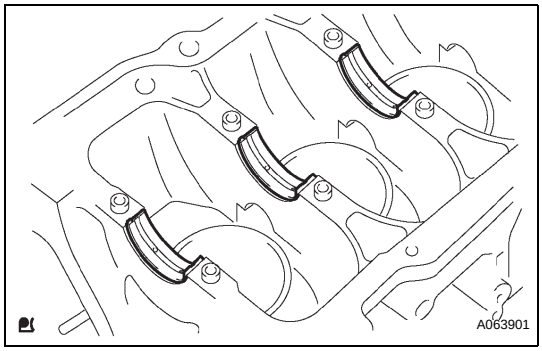

54. REMOVE CRANKSHAFT BEARING

(a) Remove the 5 upper main bearings from the cylinder block.
HINT:
Arrange the bearings in the correct order.

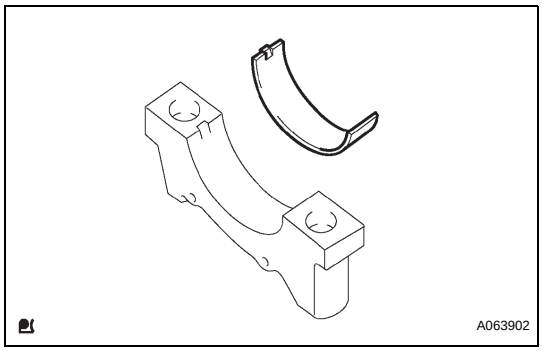

55. REMOVE NO. 2 CRANKSHAFT BEARING

(a) Remove the 5 lower main bearings from the 5 main bearing caps.
HINT:
Arrange the bearings in the correct order.

56. REMOVE STUD BOLT

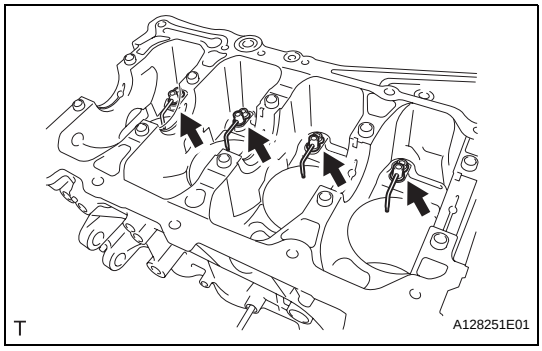

57. REMOVE NO. 1 OIL NOZZLE SUB-ASSEMBLY

(a) Using a 5 mm hexagon wrench, remove the bolts and oil nozzles.

58. CLEAN CYLINDER BLOCK

NOTICE:

If the cylinder is washed at high temperatures, the cylinder liner will stick out beyond the cylinder block. Always wash the cylinder block at a temperature of 45°C (113°F) or less.

INSPECTION

1. INSPECT BALANCESHAFT THRUST CLEARANCE

(a) Install the balanceshafts (See page EM-149).

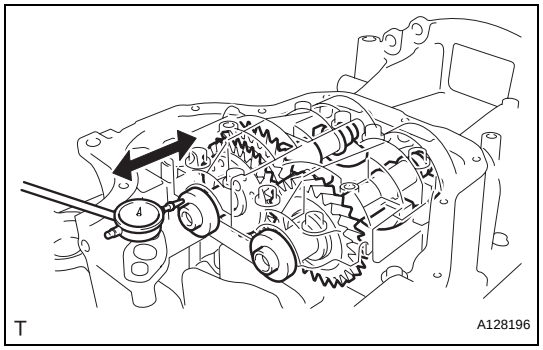

(b) Using a dial indicator, measure the thrust clearance while moving the balanceshaft back and forth.
Standard thrust clearance:
0.05 to 0.09 mm (0.0020 to 0.0035 in.)
Maximum thrust clearance:
0.09 mm (0.0035 in.)
If the thrust clearance is greater than the maximum, replace the balanceshaft housing and bearings. If necessary, replace the balanceshaft.

2. INSPECT BALANCESHAFT OIL CLEARANCE

(a) Clean each bearing and journal.

(b) Check each bearing and journal for pitting and scratches.
If a bearing or journal is damaged, replace the bearings. If necessary, replace the balanceshaft.

(c) Place the No. 1 and No. 2 balanceshafts onto the crankcase.

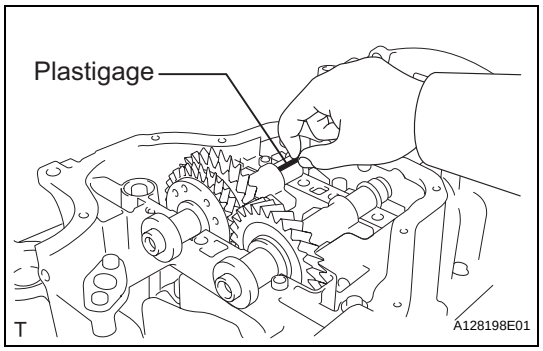

(d) Lay a strip of Plastigage across each journal.

(e) Install the balanceshaft housing (See page EM-149).
NOTICE:
Do not turn the balanceshafts.

(f) Remove the balanceshafts (See page EM-127).

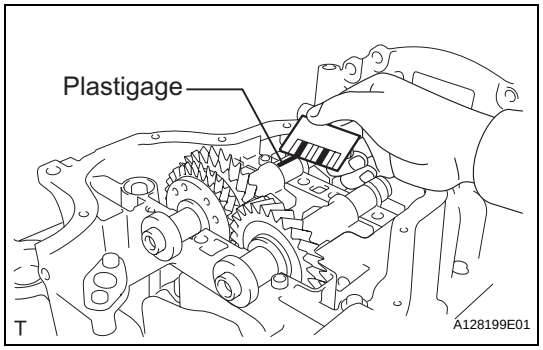

(g) Measure the Plastigage at its widest point.
Standard oil clearance:
0.004 to 0.049 mm (0.0002 to 0.0019 in.)
Maximum oil clearance:
0.049 mm (0.0019 in.)
NOTICE:
Remove the Plastigage completely after the measurement.
If the oil clearance is greater than the maximum, replace the bearing. If necessary, replace the balanceshaft.

(h) If replacing a bearing, select a new one with the same number.
Standard balanceshaft housing journal bore diameter

Item	Specified Condition
Mark 1	26.000 to 26.006 mm (1.0236 to 1.0239 in.)
Mark 2	26.007 to 26.012 mm (1.0239 to 1.0241 in.)
Mark 3	26.013 to 26.018 mm (1.0241 to 1.0243 in.)

EM

Standard bearing center wall thickness

Item	Specified Condition
Mark 1	1.486 to 1.489 mm (0.05850 to 0.05862 in.)
Mark 2	1.490 to 1.492 mm (0.05866 to 0.05874 in.)
Mark 3	1.493 to 1.495 mm (0.0588 to 0.0589 in.)

Standard balanceshaft journal diameter

Item	Journal diameter
Mark 1	22.985 to 23.000 mm (0.9049 to 0.9055 in.)
Mark 2	22.985 to 23.000 mm (0.9049 to 0.9055 in.)
Mark 3	22.985 to 23.000 mm (0.9049 to 0.9055 in.)

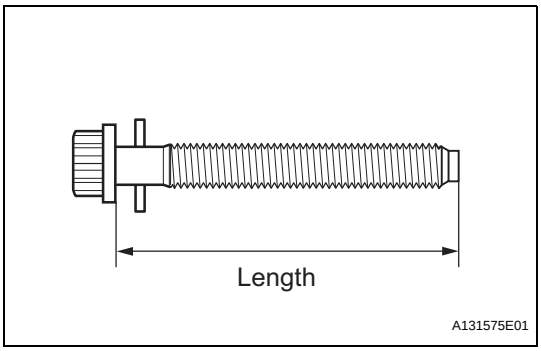

(i) Inspect the balanceshaft housing bolts.
(1) Using vernier calipers, measure the length of the bolts from the seat to the end.
Standard bolt length:
58.3 to 59.7 mm (2.295 to 2.350 in.)
Maximum bolt length:
60.3 mm (2.374 in.)
If the bolt length is greater than the maximum, replace the balanceshaft housing bolt.

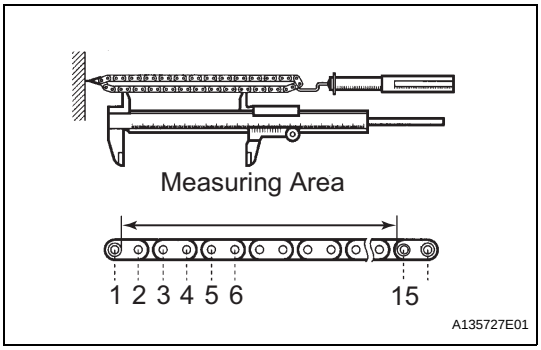

3. INSPECT CHAIN SUB-ASSEMBLY
(a) Pull the chain with a force of 140 N (14.3 kgf, 31.5 lbf) as shown in the illustration.
(b) Using vernier calipers, measure the length of 15 links.
Maximum chain elongation:
114.5 mm (4.508 in.)
NOTICE:
Perform the measurement at 3 random places.
Use the average of the measurements.
If the elongation is greater than the maximum, replace the chain.

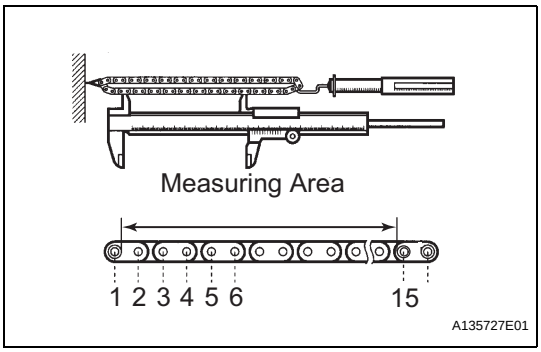

4. INSPECT NO. 2 CHAIN SUB-ASSEMBLY
(a) Pull the chain with a force of 140 N (14.3 kgf, 31.5 lbf) as shown in the illustration.
(b) Using vernier calipers, measure the length of 15 links.
Maximum chain elongation:
102.2 mm (4.024 in.)
NOTICE:
Perform the measurement at 3 random places.
Use the average of the measurements.
If the elongation is greater than the maximum, replace the No. 2 chain.

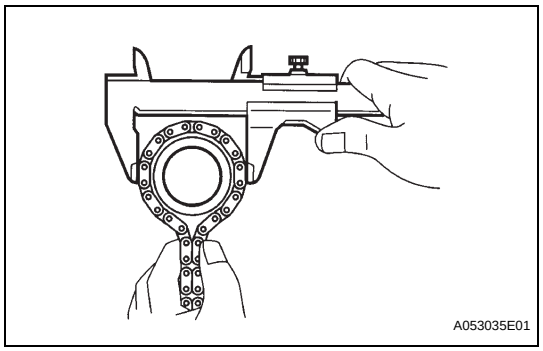

5. INSPECT OIL PUMP DRIVE GEAR

(a) Wrap the chain around the sprocket.

(b) Using vernier calipers, measure the sprocket diameter with the chain wrapped around.

Minimum gear diameter (with chain):
48.2 mm (1.898 in.)

NOTICE:
The vernier calipers must be in contact with the chain rollers when measuring.

If the diameter is less than the minimum, replace the chain and sprocket.

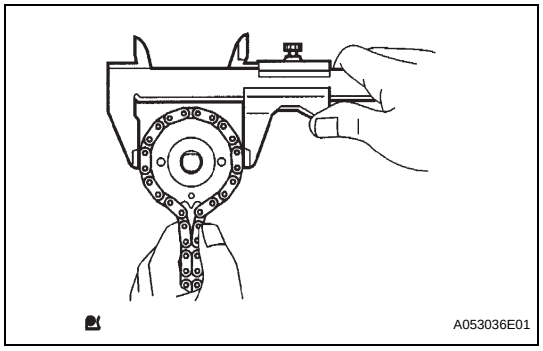

6. INSPECT OIL PUMP DRIVE SHAFT GEAR

(a) Wrap the chain around the sprocket.

(b) Using vernier calipers, measure the sprocket diameter with the chain wrapped around.

Minimum gear diameter (with chain):
48.2 mm (1.898 in.)

NOTICE:
The vernier calipers must be in contact with the chain rollers when measuring.

If the diameter is less than the minimum, replace the chain and sprocket.

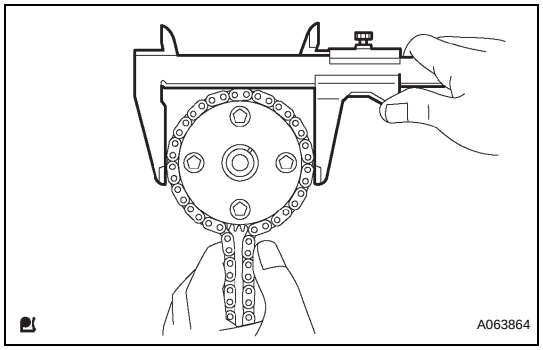

7. INSPECT CAMSHAFT TIMING GEAR ASSEMBLY

(a) Wrap the chain around the sprocket.

(b) Using vernier calipers, measure the sprocket diameter with the chain wrapped around.

Minimum gear diameter (with chain):
97.3 mm (3.831 in.)

NOTICE:
The vernier calipers must be in contact with the chain rollers when measuring.

If the diameter is less than the minimum, replace the chain and sprocket.

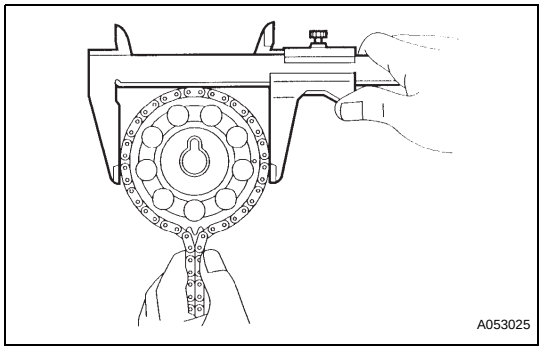

8. INSPECT CAMSHAFT TIMING SPROCKET

(a) Wrap the chain around the sprocket.

(b) Using vernier calipers, measure the sprocket diameter with the chain wrapped around.

Minimum gear diameter (with chain):
97.3 mm (3.831 in.)

NOTICE:
The vernier calipers must be in contact with the chain rollers when measuring.

If the diameter is less than the minimum, replace the chain and sprocket.

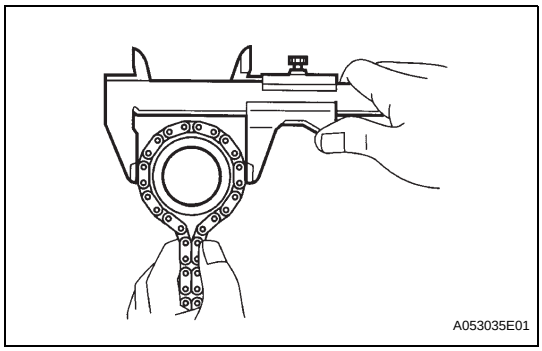

9. INSPECT CRANKSHAFT TIMING GEAR

(a) Wrap the chain around the timing sprocket.

(b) Using vernier calipers, measure the timing gear diameter with the chain wrapped around.

Minimum gear diameter (with chain):
51.6 mm (2.031 in.)

NOTICE:
The vernier calipers must be in contact with the chain rollers when measuring.

If the gear diameter is less than the minimum, replace the chain sub-assembly and crankshaft timing sprocket.

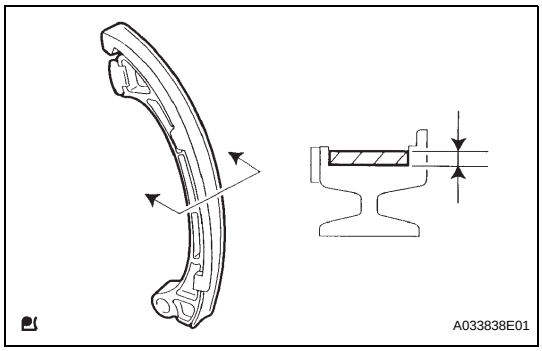

10. INSPECT CHAIN TENSIONER SLIPPER

(a) Using vernier calipers, measure the tensioner slipper wear.

Maximum wear:
1.0 mm (0.039 in.)

If the wear is greater than the maximum, replace the chain tensioner slipper.

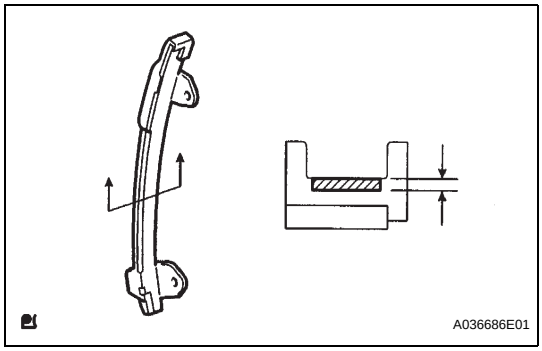

11. INSPECT NO. 1 CHAIN VIBRATION DAMPER

(a) Using vernier calipers, measure the vibration damper wear.

Maximum wear:
1.0 mm (0.039 in.)

If the wear is greater than the maximum, replace the No. 1 chain vibration damper.

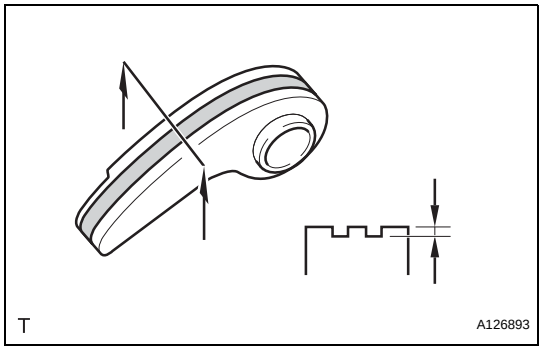

12. INSPECT CHAIN TENSIONER PLATE

(a) Using vernier calipers, measure the vibration damper wear.

Maximum wear:
0.5 mm (0.020 in.)

If the wear is greater than the maximum, replace the chain tensioner plate.

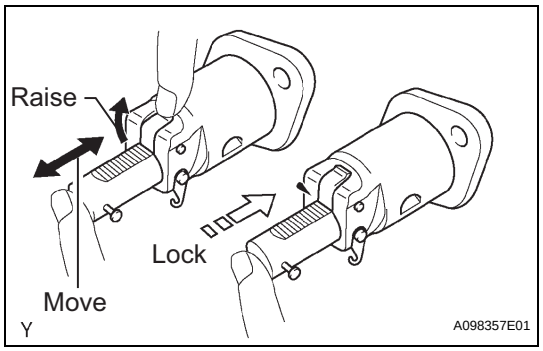

13. INSPECT NO. 1 CHAIN TENSIONER

(a) Check that the plunger moves smoothly when the ratchet pawl is raised with your finger.

(b) Release the ratchet pawl, then check that the plunger is locked in place by the ratchet pawl and does not move when pushed with your finger.

14. INSPECT CONNECTING ROD THRUST CLEARANCE

(a) Install the connecting rod cap (See page EM-149).

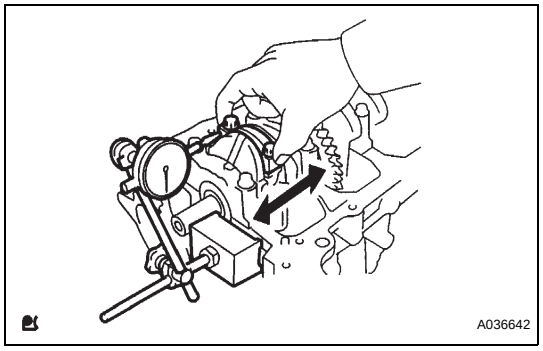

(b) Using a dial indicator, measure the thrust clearance while moving the connecting rod back and forth.

Standard thrust clearance:
0.160 to 0.362 mm (0.0063 to 0.0143 in.)
Maximum thrust clearance:
0.362 mm (0.0143 in.)

If the thrust clearance is greater than the maximum, replace the connecting rod assemblies as necessary. If necessary, replace the crankshaft.

15. INSPECT CONNECTING ROD OIL CLEARANCE

(a) Clean the crank pin and bearing.

(b) Check the crank pin and bearing for pitting and scratches.

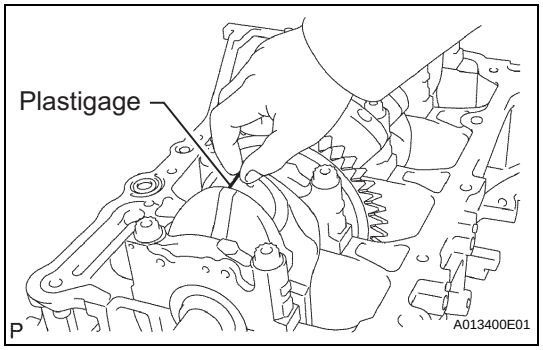

(c) Lay a strip of Plastigage on the crank pin.

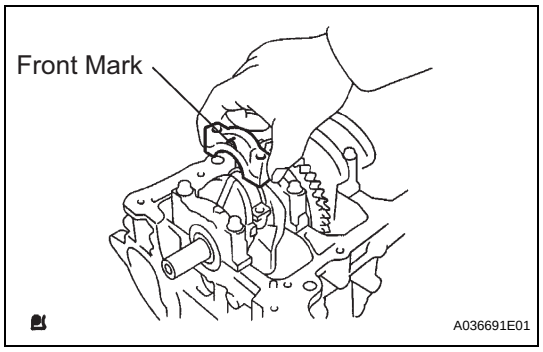

(d) Check that the front mark of the connecting rod cap is facing forward.

(e) Install the connecting rod cap (See page EM-149).

NOTICE:
Do not turn the crankshaft.

(f) Remove the 2 bolts and connecting rod cap (See page EM-127).

EM

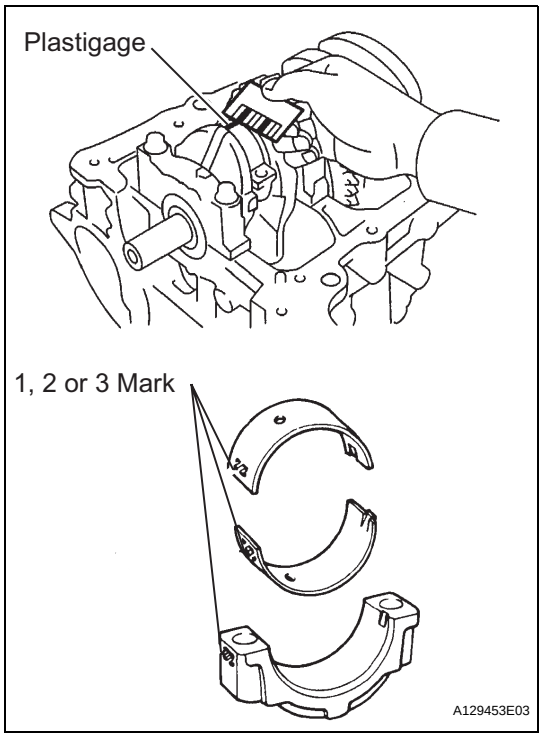

(g) Measure the Plastigage at its widest point.

Standard oil clearance:
0.032 to 0.063 mm (0.0013 to 0.0025 in.)
Maximum oil clearance:
0.063 mm (0.0025 in.)
NOTICE:
Completely remove the Plastigage after the measurement.

If the oil clearance is greater than the maximum, replace the connecting rod bearings. If necessary, inspect the crankshaft.

HINT:
If replacing a bearing, replace it with one that has the same number as its respective connecting rod cap. Each bearing's standard thickness is indicated by a 1, 2, or 3 mark on its surface.

Standard connecting rod large end bore diameter

Mark	Specified Condition
Mark 1	51.000 to 51.007 mm (2.0079 to 2.0082 in.)
Mark 2	51.008 to 51.013 mm (2.0082 to 2.0084 in.)
Mark 3	51.014 to 51.020 mm (2.0084 to 2.0087 in.)

Standard connecting rod bearing thickness

Mark	Specified Condition
Mark 1	1.485 to 1.488 mm (0.0585 to 0.0586 in.)
Mark 2	1.489 to 1.491 mm (0.0586 to 0.0587 in.)
Mark 3	1.492 to 1.494 mm (0.0587 to 0.0588 in.)

Standard crankshaft pin diameter

Mark	Specified Condition
Mark 1	47.990 to 48.000 (1.8894 to 1.8898 in.)
Mark 2	47.990 to 48.000 (1.8894 to 1.8898 in.)
Mark 3	47.990 to 48.000 (1.8894 to 1.8898 in.)

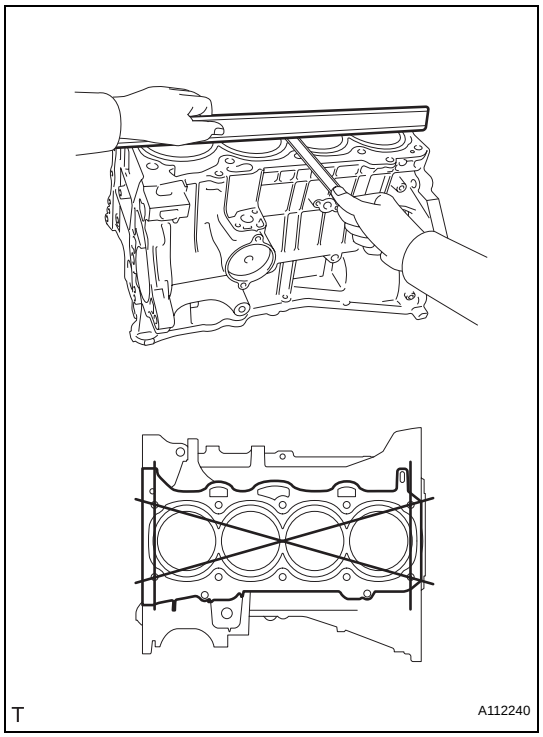

16. INSPECT CYLINDER BLOCK FOR WARPAGE

(a) Using a precision straightedge and feeler gauge, measure the warpage of the surface that is in contact with the cylinder head gasket.

Maximum warpage:
0.05 mm (0.0020 in.)

If the warpage is greater than the maximum, replace the cylinder block.

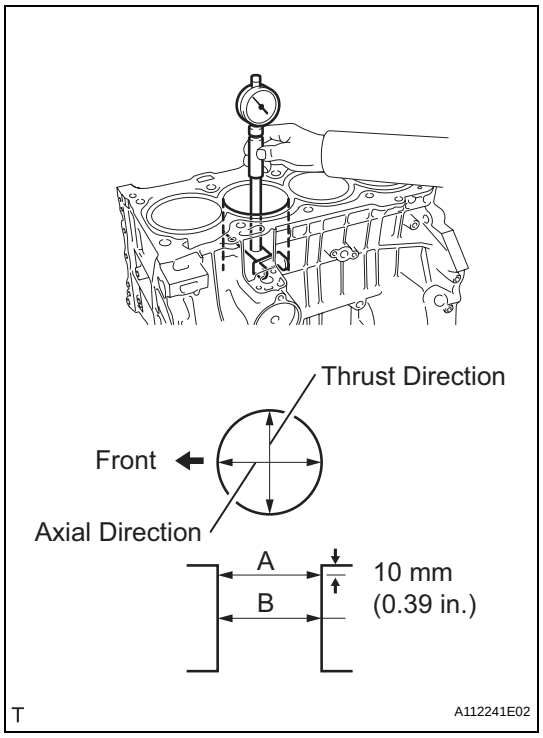

17. INSPECT CYLINDER BORE

(a) Using a cylinder gauge, measure the cylinder bore diameter at positions A and B in the thrust and axial directions.

Standard diameter:
88.500 to 88.513 mm (3.4843 to 3.4847 in.)
Maximum diameter:
88.633 mm (3.4894 in.)

If the average diameter of the 4 positions is greater than the maximum, replace the cylinder block.

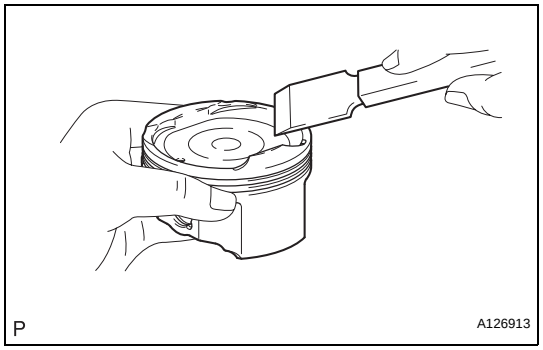

18. INSPECT PISTON

(a) Using a gasket scraper, remove the carbon from the piston top.

EM

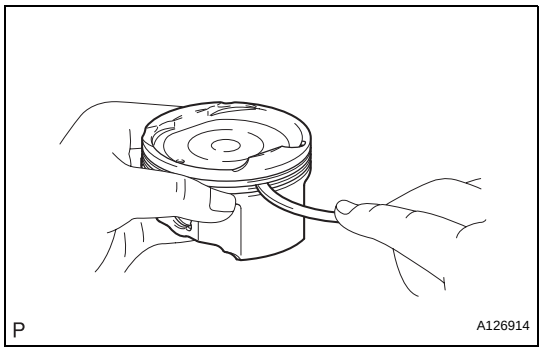

(b) Using a groove cleaning tool or a broken ring, clean the piston ring grooves.

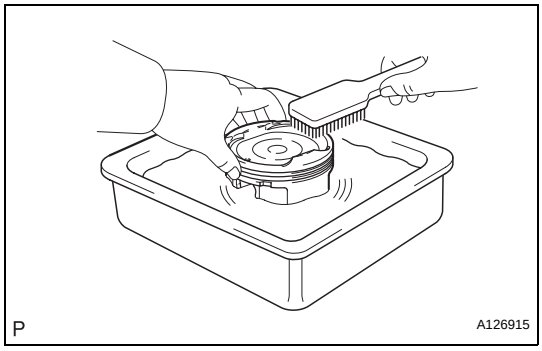

(c) Using a brush and solvent, thoroughly clean the piston.
NOTICE:
Do not use a wire brush.

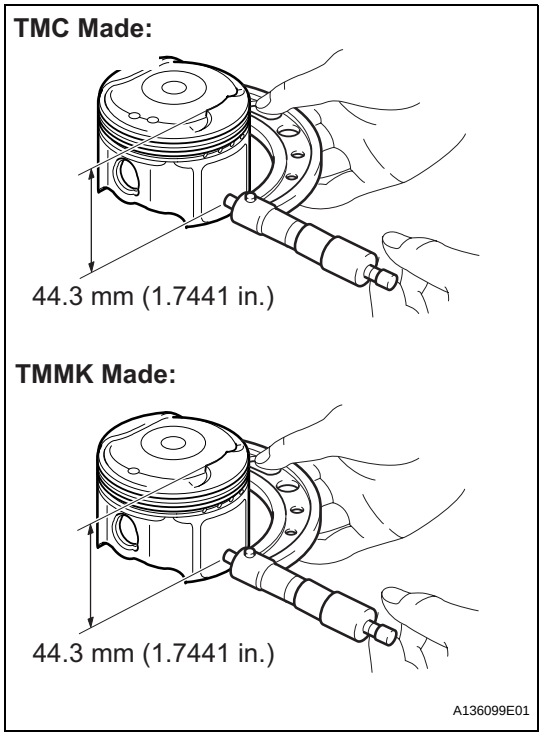

(d) Using a micrometer, measure the piston diameter at right angles to the piston pin hole, and at the piston 44.3 mm (1.7441 in.) from the piston head.
Standard piston diameter:
88.469 to 88.479 mm (3.4830 to 3.4834 in.)
If the diameter is not as specified, replace the piston.

19. INSPECT PISTON OIL CLEARANCE

(a) Subtract the piston diameter measurement from the cylinder bore diameter measurement.
Standard oil clearance:
0.021 to 0.044 mm (0.0008 to 0.0017 in.)
Maximum oil clearance:
0.10 mm (0.0039 in.)
If the oil clearance is greater than the maximum, replace all the pistons. If necessary, replace the cylinder block.

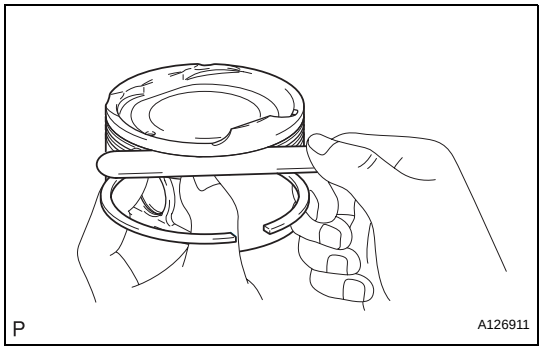

20. INSPECT RING GROOVE CLEARANCE

(a) Using a feeler gauge, measure the clearance between a new piston ring and wall of the ring groove.
Standard ring groove clearance

Item	Specified Condition
No. 1 Ring	0.020 to 0.070 mm (0.0008 to 0.0028 in.)
No. 2 Ring	0.020 to 0.060 mm (0.0008 to 0.0024 in.)
Oil Ring	0.020 to 0.070 mm (0.0008 to 0.0028 in.)

EM

If the groove clearance is not as specified, replace the piston.

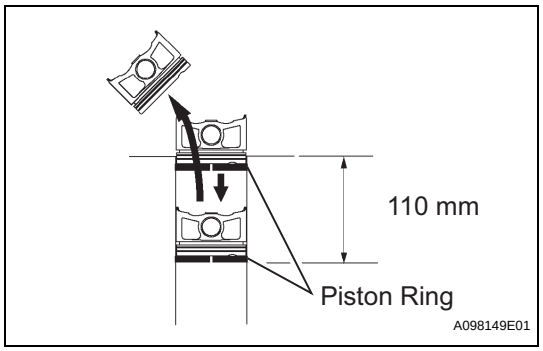

21. INSPECT PISTON RING END GAP

(a) Using a piston, push the piston ring a little beyond the bottom of the ring travel, 110 mm (4.33 in.) from the top of the cylinder block.

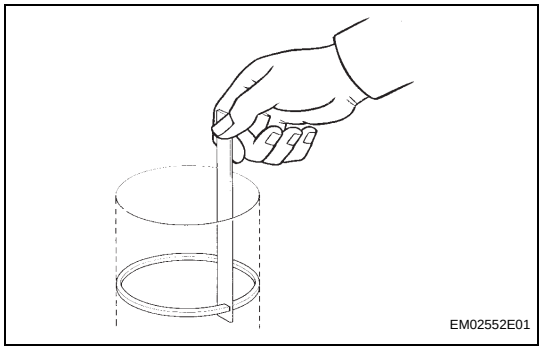

(b) Using a feeler gauge, measure the end gap.

Standard end gap

Item	Specified Condition
No. 1 Ring	**0.24 to 0.31 mm (0.0094 to 0.0122 in.)**
No. 2 Ring	**0.33 to 0.43 mm (0.0130 to 0.0169 in.)**
Oil Ring	**0.10 to 0.30 mm (0.0040 to 0.0119 in.)**

Maximum end gap

Item	Specified Condition
No. 1 Ring	**0.89 mm (0.0350 in.)**
No. 2 Ring	**1.37 mm (0.0539 in.)**
Oil Ring	**0.73 mm (0.0287 in.)**

If the end gap is greater than the maximum, replace the piston ring. If the end gap is greater than the maximum, even with a new piston ring, replace the cylinder block.

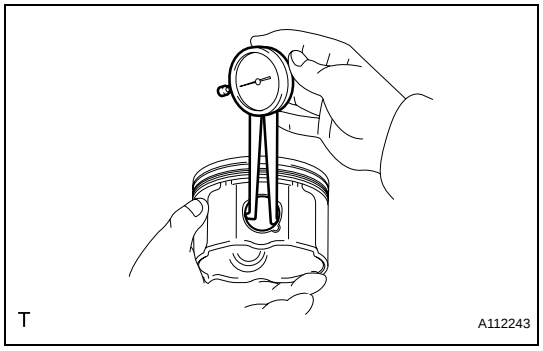

22. INSPECT PISTON PIN OIL CLEARANCE

(a) Using a caliper gauge, measure the piston pin bore diameter.

Standard piston pin bore diameter:
22.001 to 22.010 mm (0.8662 to 0.8665 in.)

Item	Specified Condition
A	22.001 to 22.004 mm (0.8662 to 0.8663 in.)
B	22.005 to 22.007 mm (0.8663 to 0.8664 in.)
C	22.008 to 22.010 mm (0.8665 to 0.8665 in.)

If the diameter is not as specified, replace the piston.

EM

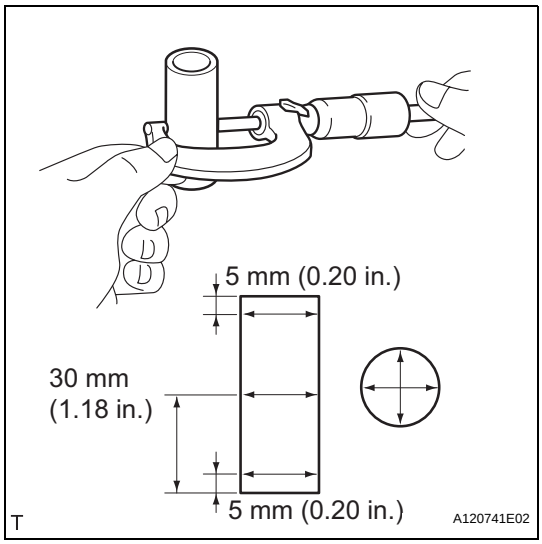

(b) Using a micrometer, measure the piston pin diameter.
Standard piston pin diameter:
21.997 to 22.006 mm (0.8660 to 0.8664 in.)

Item	Specified Condition
A	21.997 to 22.000 mm (0.8660 to 0.8661 in.)
B	22.001 to 22.003 mm (0.8662 to 0.8663 in.)
C	22.004 to 22.006 mm (0.8663 to 0.8664 in.)

If the diameter is not as specified, replace the piston pin.

EM

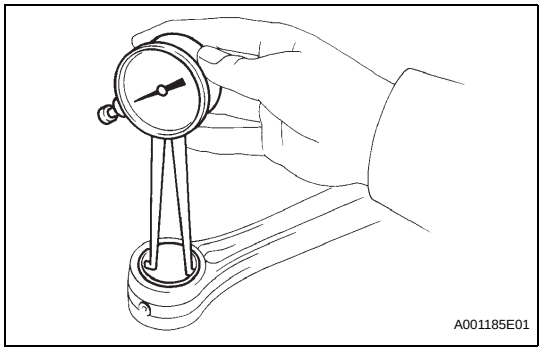

(c) Using a caliper gauge, measure the connecting rod small end bore diameter.
Standard connecting rod small end bore diameter:
22.005 to 22.014 mm (0.8663 to 0.8667 in.)

Item	Specified Condition
A	22.005 to 22.008 mm (0.8663 to 0.8665 in.)
B	22.009 to 22.011 mm (0.8665 to 0.8666 in.)
C	22.012 to 22.014 mm (0.8666 to 0.8667 in.)

If the diameter is not as specified, replace the connecting rod.

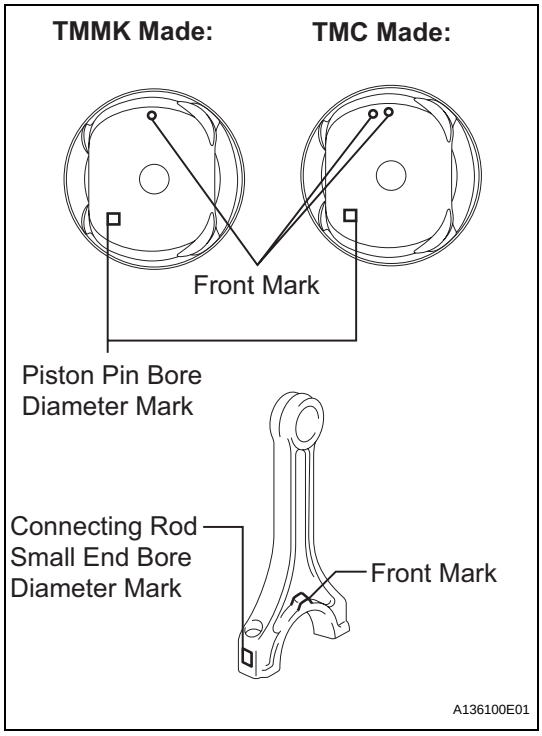

(d) Subtract the piston pin diameter measurement from the piston pin bore diameter measurement.
Standard oil clearance:
0.001 to 0.007 mm (0.00004 to 0.0003 in.)
Maximum oil clearance:
0.010 mm (0.0004 in.)
If the oil clearance is greater than the maximum, replace the connecting rod. If necessary, replace the piston and piston pin as a set.

(e) Subtract the piston pin diameter measurement from the connecting rod small end bore diameter measurement.
Standard oil clearance:
0.005 to 0.011 mm (0.0002 to 0.0004 in.)
Maximum oil clearance:
0.011 mm (0.0004 in.)
If the oil clearance is greater than the maximum, replace the connecting rod. If necessary, replace the connecting rod and piston pin as a set.

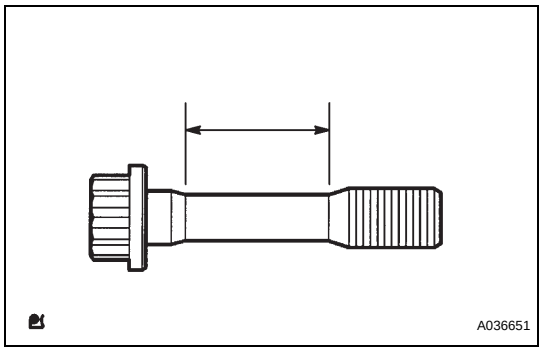

23. INSPECT CONNECTING ROD BOLT

(a) Using vernier calipers, measure the tension portion diameter of the bolt.

Standard diameter:
7.2 to 7.3 mm (0.283 to 0.287 in.)
Minimum diameter:
7.0 mm (0.276 in.)
If the diameter is less than the minimum, replace the connecting rod bolt.

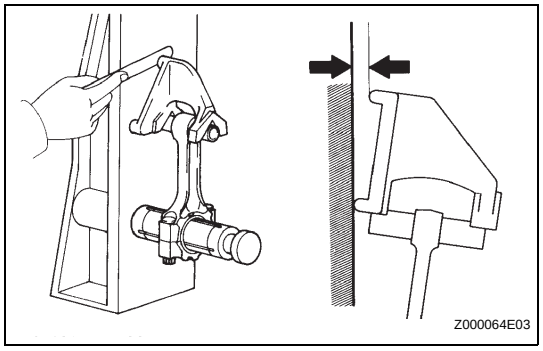

24. INSPECT CONNECTING ROD SUB-ASSEMBLY

(a) Using a connecting rod aligner and feeler gauge, check the connecting rod alignment.

(1) Check for misalignment.
Maximum misalignment:
0.05 mm (0.0020 in.) per 100 mm (3.94 in.)
If the misalignment is greater than the maximum, replace the connecting rod.

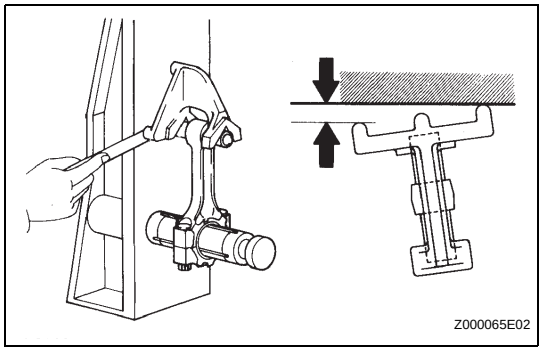

(2) Check for twist.
Maximum twist:
0.15 mm (0.0059 in.) per 100 mm (3.94 in.)
If the twist is greater than the maximum, replace the connecting rod.

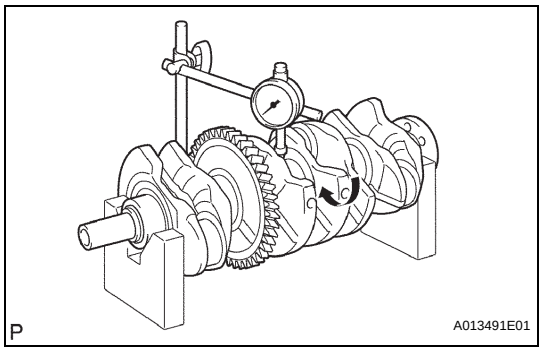

25. INSPECT CRANKSHAFT

(a) Using a dial indicator and V-blocks, measure the circle runout as shown in the illustration.

Maximum circle runout:
0.03 mm (0.0012 in.)
If the taper and distortion are greater than the maximum, replace the crankshaft.

EM

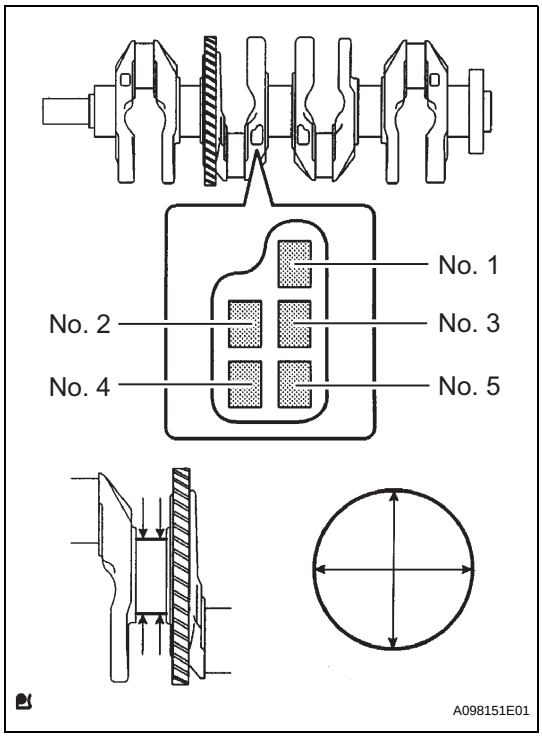

(b) Using a micrometer, measure the diameter of each main journal.
Standard diameter:
54.988 to 55.000 mm (2.1649 to 2.1654 in.)
If the diameter is not as specified, check the crankshaft oil clearance.

(c) Check each main journal for taper and distortion as shown in the illustration.
Maximum taper and distortion:
0.003 mm (0.0001 in.)
If the taper and distortion are greater than the maximum, replace the crankshaft.
Standard diameter (Reference)

Mark	Specified Condition
0	54.999 to 55.000 mm (2.1653 to 2.1654 in.)
1	54.997 to 54.998 mm (2.1652 to 2.1653 in.)
2	54.995 to 54.996 mm (2.1652 to 2.1652 in.)
3	54.993 to 54.994 mm (2.1651 to 2.1651 in.)
4	54.991 to 54.992 mm (2.1650 to 2.1650 in.)
5	54.988 to 54.990 mm (2.1649 to 2.1650 in.)

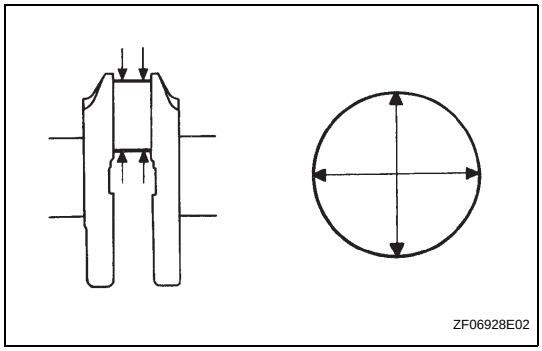

(d) Using a micrometer, measure the diameter of each crank pin.
Standard diameter:
47.990 to 48.000 mm (1.8894 to 1.8898 in.)
If the diameter is not as specified, check the connecting rod oil clearance.

(e) Inspect each crank pin for taper and distortion as shown in the illustration.
Maximum taper and distortion:
0.003 mm (0.0001 in.)
If the taper and distortion are greater than the maximum, replace the crankshaft.

26. INSPECT CRANKSHAFT THRUST CLEARANCE

(a) Install the main bearing cap (See page EM-149).

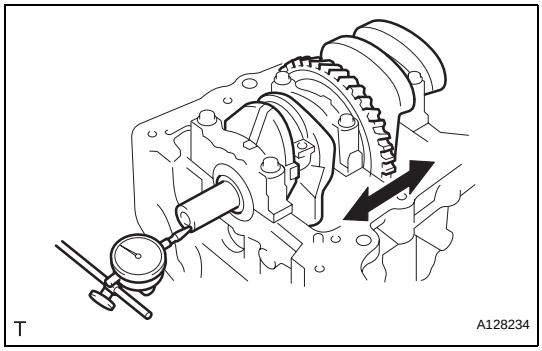

(b) Using a dial indicator, measure the thrust clearance while prying the crankshaft back and forth with a screwdriver.
Standard thrust clearance:
0.04 to 0.24 mm (0.0016 to 0.0095 in.)
Maximum thrust clearance:
0.30 mm (0.0118 in.)
If the thrust clearance is greater than the maximum, replace the thrust washers as a set.
HINT:
The thrust washer thickness is 1.93 to 1.98 mm (0.0760 to 0.0780 in.).

27. INSPECT CRANKSHAFT OIL CLEARANCE

(a) Check the crank journal and bearing for pitting and scratches.

(b) Install the crankshaft bearing (See page EM-149).

(c) Place the crankshaft on the cylinder block.

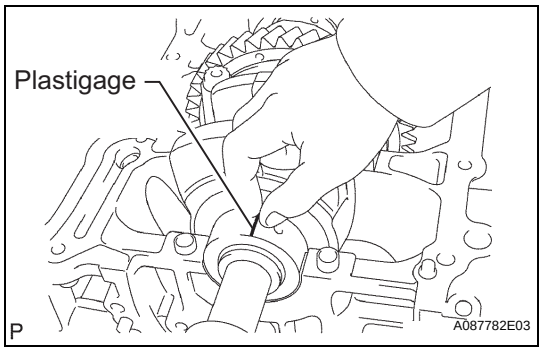

(d) Lay a strip of Plastigage across each journal.

(e) Examine the front marks and numbers and install the bearing caps on the cylinder block.
HINT:
A number is marked on each main bearing cap to indicate the installation position.

(f) Install the main bearing cap (See page EM-149).
NOTICE:
Do not turn the crankshaft.

(g) Remove the main bearing caps (See page EM-127).

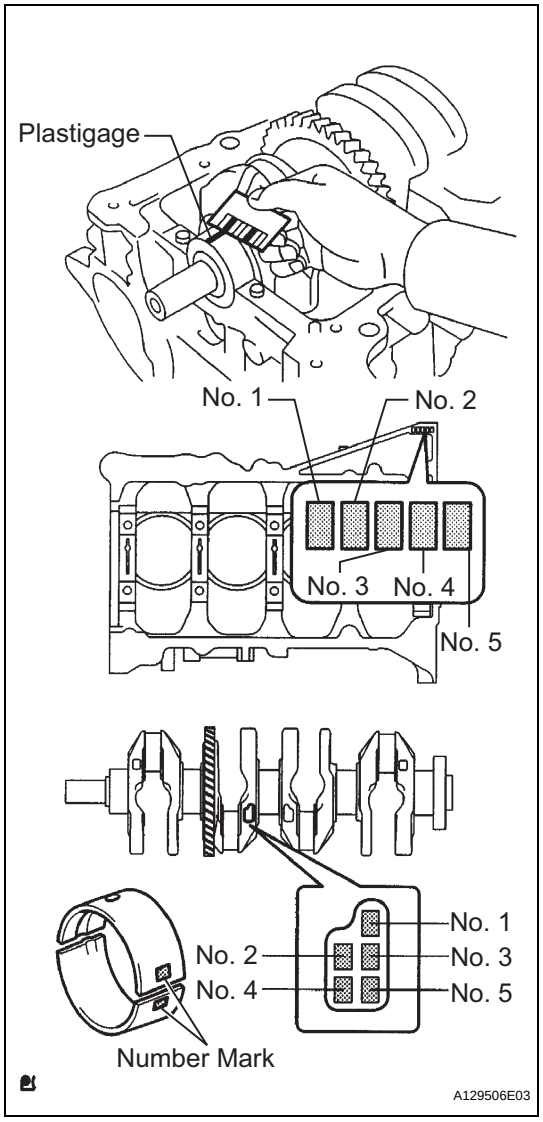

(h) Measure the Plastigage at its widest point.
Standard oil clearance:
0.017 to 0.040 mm (0.0007 to 0.0016 in.)
Maximum oil clearance:
0.060 mm (0.0024 in.)
NOTICE:
Remove the Plastigage completely after the measurement.
If the oil clearance is greater than the maximum, replace the crankshaft bearing. If necessary, replace the crankshaft.
HINT:
- If replacing a bearing, select a new one with the same number. If the number of the bearing cannot be determined, calculate the correct bearing number by adding together the numbers imprinted on the cylinder block and crankshaft. Then select a new bearing with the calculated number. There are 4 sizes of standard bearings, marked "1", "2", "3" and "4" accordingly.
- EXAMPLE: Cylinder block "3" + Crankshaft "5" = Total number 8 (Use bearing "3")

Cylinder block + Crankshaft	0 to 2	3 to 5	6 to 8	9 to 11
Bearing to be used	"1"	"2"	"3"	"4"

Standard cylinder block journal bore diameter

Mark	Specified Condition
0	59.000 to 59.002 mm (2.3228 to 2.3229 in.)
1	59.003 to 59.004 mm (2.3230 to 2.3230 in.)
2	59.005 to 59.006 mm (2.3230 to 2.3231 in.)
3	59.007 to 59.009 mm (2.3231 to 2.3232 in.)
4	59.010 to 59.011 mm (2.3232 to 2.3233 in.)
5	59.012 to 59.013 mm (2.3233 to 2.3234 in.)
6	59.014 to 59.016 mm (2.3234 to 2.3235 in.)

Standard crankshaft journal diameter

Mark	Specified Condition
0	54.999 to 55.000 mm (2.1653 to 2.1654 in.)
1	54.997 to 54.998 mm (2.1652 to 2.1653 in.)
2	54.995 to 54.996 mm (2.1652 to 2.1652 in.)
3	54.993 to 54.994 mm (2.1651 to 2.1651 in.)
4	54.991 to 54.992 mm (2.1650 to 2.1650 in.)

Mark	Specified Condition
5	54.988 to 54.990 mm (2.1649 to 2.1650 in.)

Standard bearing center wall thickness

Mark	Specified Condition
1	1.993 to 1.996 mm (0.0785 to 0.0786 in.)
2	1.997 to 1.999 mm (0.0786 to 0.0787 in.)
3	2.000 to 2.002 mm (0.0787 to 0.0788 in.)
4	2.003 to 2.005 mm (0.0789 to 0.0789 in.)

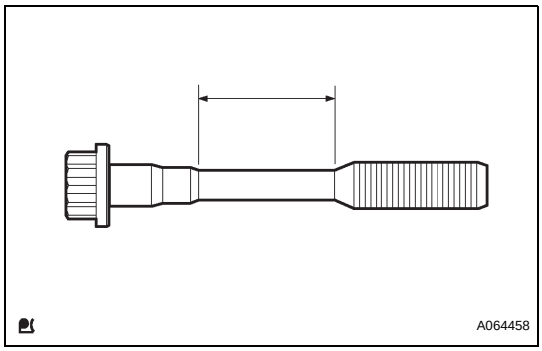

28. INSPECT CRANKSHAFT BEARING CAP SET BOLT

(a) Using vernier calipers, measure the tension portion diameter of the bolts.

Standard diameter:
7.3 to 7.5 mm (0.287 to 0.295 in.)
Minimum diameter:
7.2 mm (0.284 in.)

If the diameter is less than the minimum, replace the bolt.

REASSEMBLY

1. INSTALL RING PIN

(a) Using a plastic hammer, tap into the ring pin.

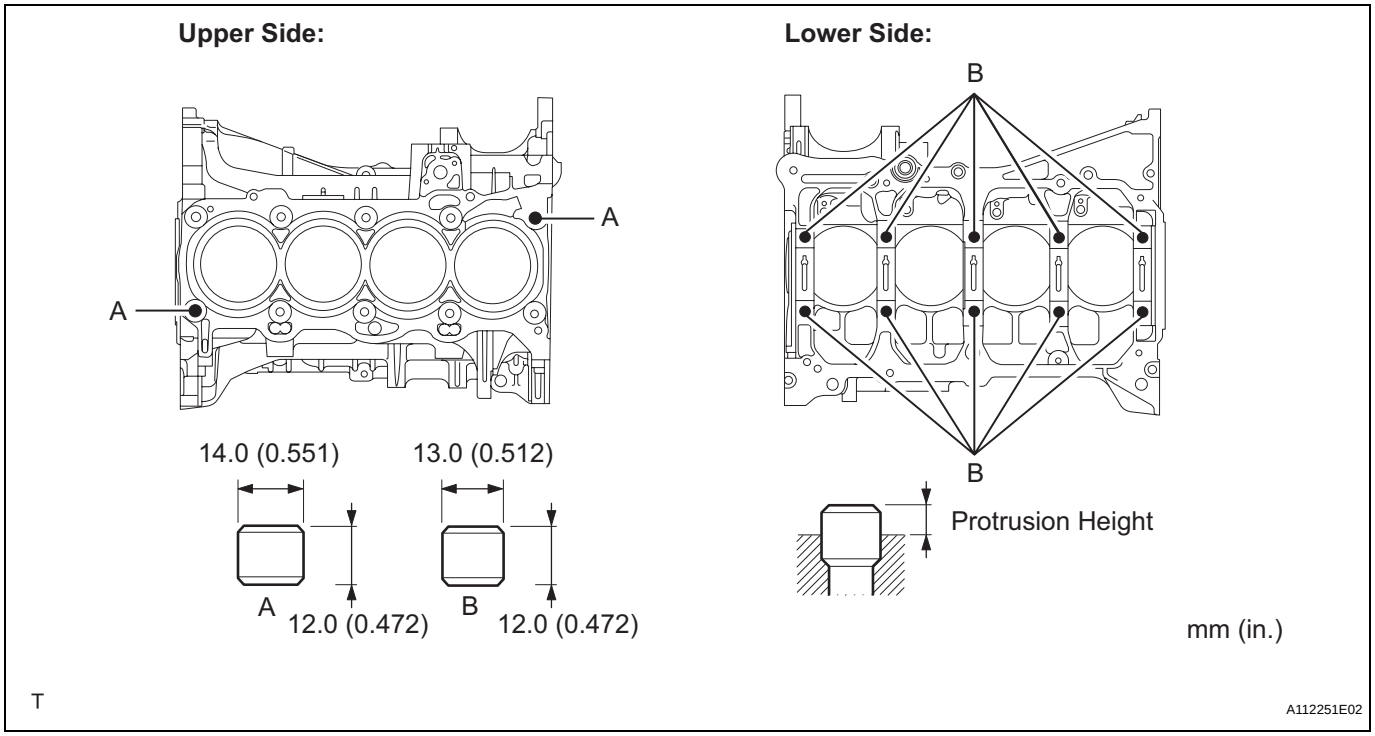

Standard protrusion

Item	Protrusion
Pin A	6 mm (0.236 in.)
Pin B	5 mm (0.197 in.)

EM

2. INSTALL STUD BOLT

(a) Install the stud bolts as shown in the illustration.

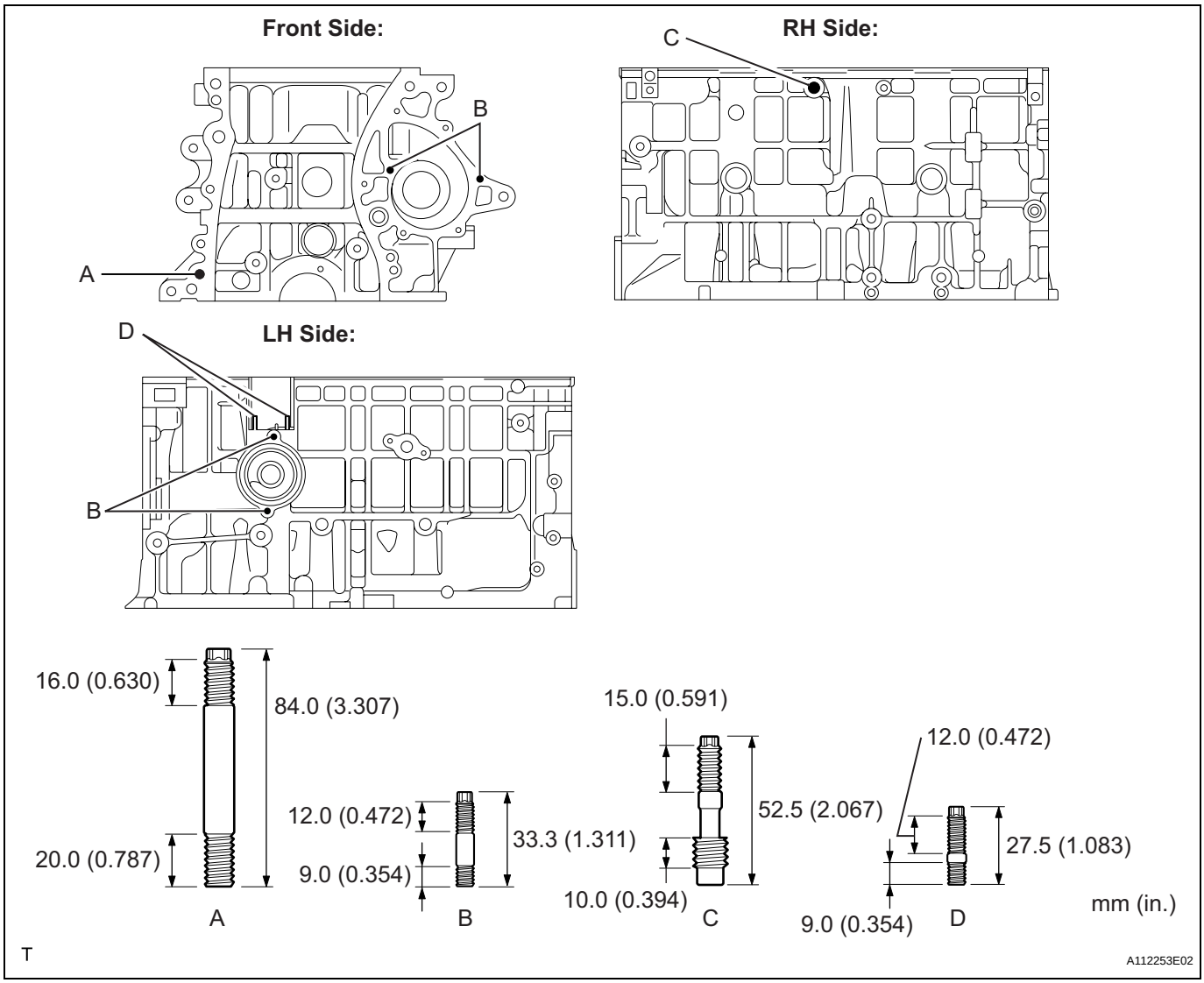

Torque: Stud Bolt A
5.0 N*m (51 kgf*cm, 44 in.*lbf)
Stud Bolt B
22 N*m (220 kgf*cm, 16 ft.*lbf)
Stud Bolt C
9.5 N*m (97 kgf*cm, 84 in.*lbf)
Stud Bolt D
5.0 N*m (51 kgf*cm, 44 in.*lbf)

EM

3. INSTALL STRAIGHT PIN

(a) Using a plastic hammer, tap into the straight pin.

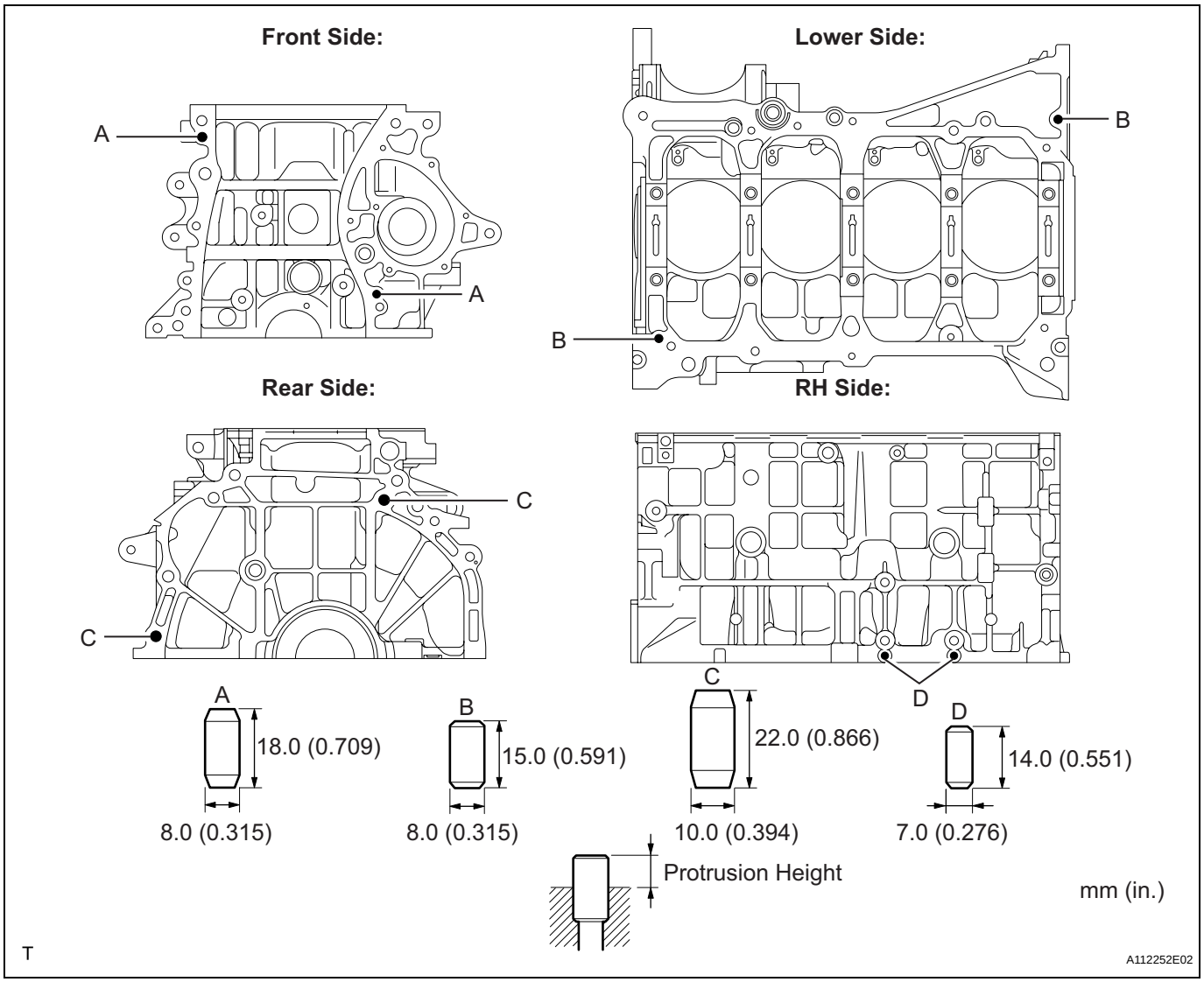

Standard protrusion

Item	Protrusion
Pin A	8 mm (0.315 in.)
Pin B	7.5 mm (0.295 in.)
Pin C	12 mm (0.472 in.)
Pin D	5 mm (0.197 in.)

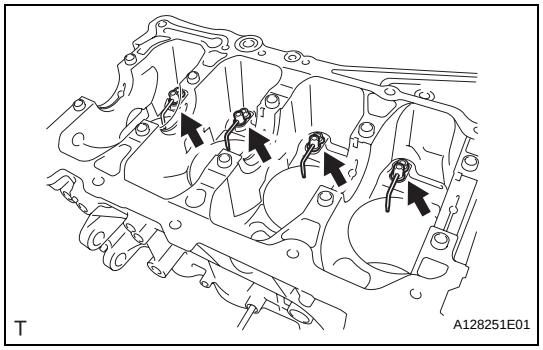

4. INSTALL NO. 1 OIL NOZZLE SUB-ASSEMBLY

(a) Using a 5 mm hexagon wrench, install the oil nozzles with the bolts.

Torque: 7.0 N*m (71 kgf*cm, 62 in.*lbf)

EM

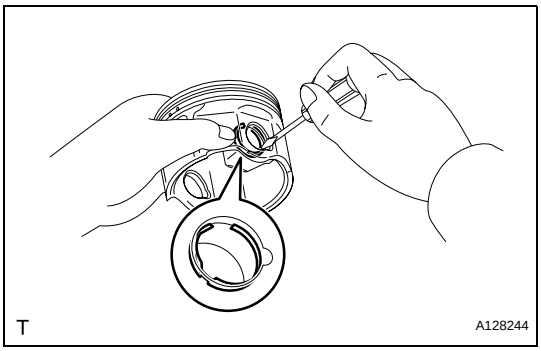

5. INSTALL PISTON

(a) Using a screwdriver, install a new snap ring at one end of the piston pin hole.
HINT:
Make sure that the end gap of the snap ring is not aligned with the pin hole cutout portion of the piston.

(b) Gradually heat the piston to approximately 80 to 90°C (176 to 194°F).

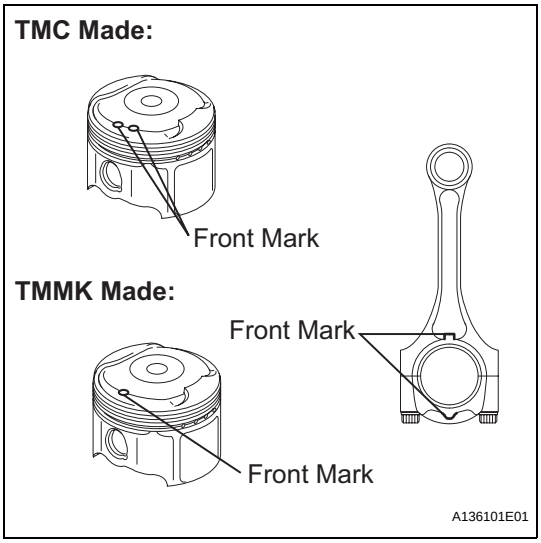

(c) Align the front marks of the piston and connecting rod, and push in the piston with your thumb.

(d) Using a screwdriver, install a new snap ring on the other end of the piston pin hole.
HINT:
Make sure that the end gap of the snap ring is not aligned with the pin hole cutout portion of the piston.

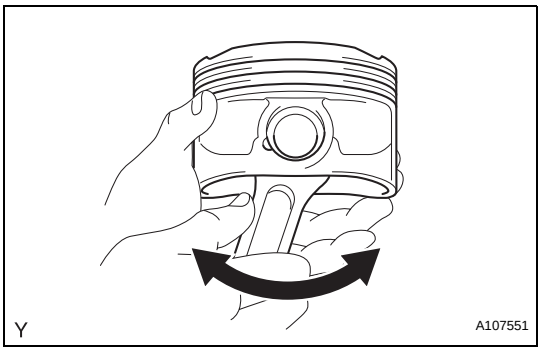

(e) Check the fitting condition between the piston and piston pin by trying to move the piston back and forth on the piston pin.

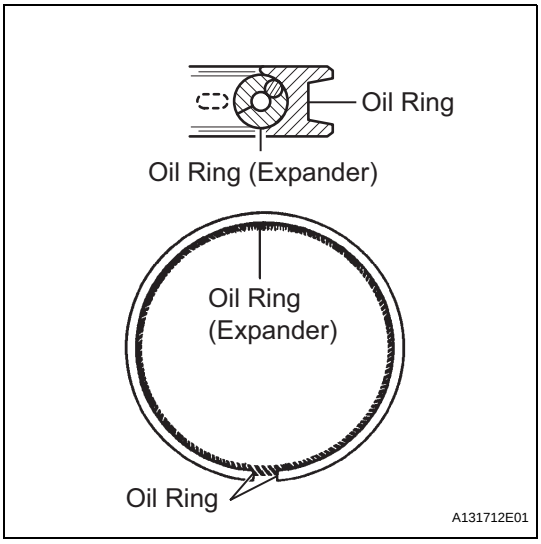

6. INSTALL PISTON RING SET

(a) Install the oil ring expander and oil ring rail by hand.
NOTICE:
- **Install the expander and oil ring so that their ring ends are at opposite sides.**
- **Securely install the expander to the inner groove of the oil ring.**

EM

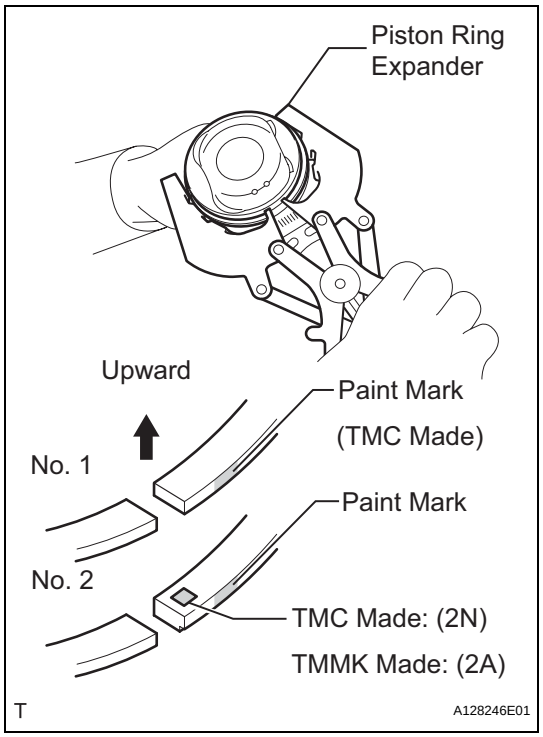

(b) Using a piston ring expander, install the 2 compression rings so that the paint marks are positioned as shown in the illustration.
NOTICE:
Install the compression ring No. 2 with the code mark (2N and 2A) facing upward.

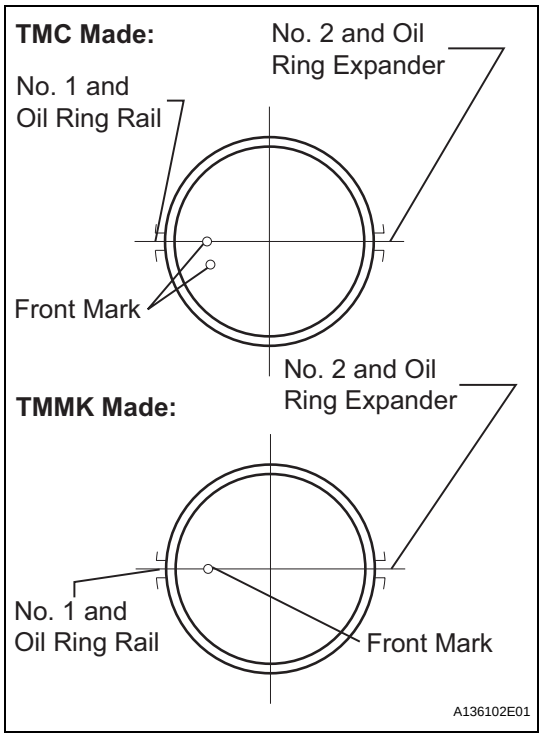

(c) Position the piston rings so that the ring ends are as shown in the illustration.

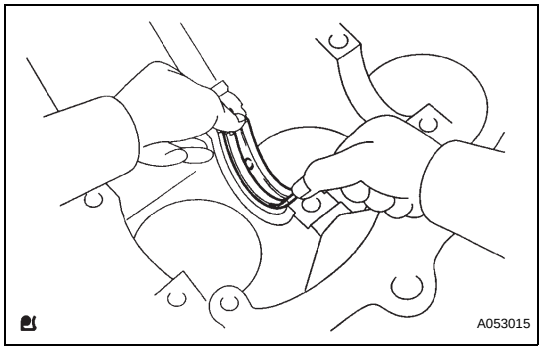

7. INSTALL CRANKSHAFT BEARING

(a) Install the upper bearing with an oil groove on the cylinder block.
NOTICE:
Do not apply engine oil to the bearings and the contact surfaces.

EM

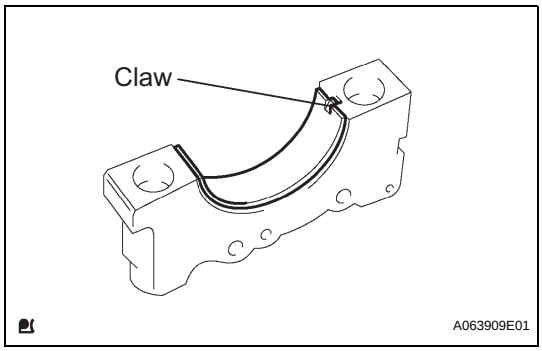

8. INSTALL NO. 2 CRANKSHAFT BEARING

(a) Install the lower bearing on the bearing cap.
NOTICE:
Clean the backside of the bearing and the bearing surface of the connecting rod. The surface should be free of dust and oils.

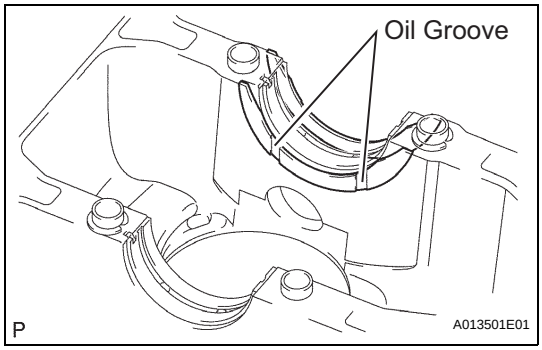

9. INSTALL UPPER CRANKSHAFT THRUST WASHER

(a) Install the 2 thrust washers under the No. 3 journal of the cylinder block with the oil grooves facing outward.
(b) Apply engine oil to the crankshaft thrust washer.

10. INSTALL CRANKSHAFT

(a) Apply engine oil to the upper bearing and install the crankshaft on the cylinder block.
(b) Apply engine oil to the lower bearing.

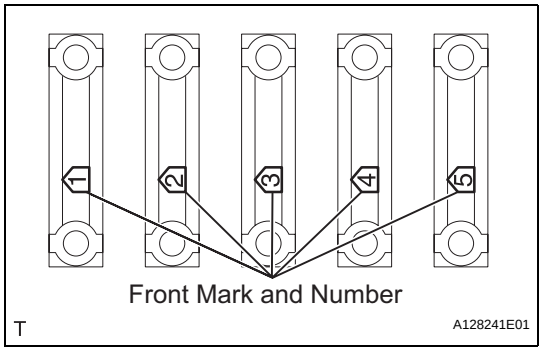

(c) Examine the front marks and install the bearing caps on the cylinder block.
(d) Apply a light coat of engine oil to the threads and under the bearing cap bolts.
(e) Install the crankshaft bearing cap bolts.
NOTICE:
The main bearing cap bolts are tightened in 2 progressive steps.

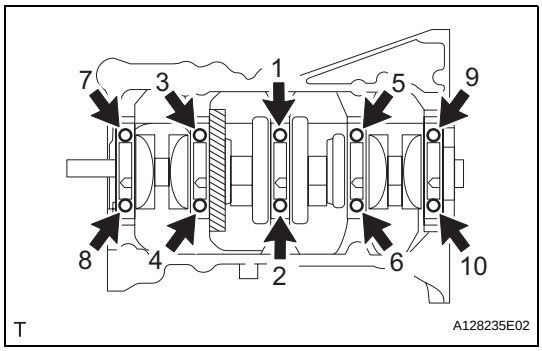

(f) Step 1
(1) Install and uniformly tighten the 10 main bearing cap bolts in the sequence shown in the illustration.
Torque: 20 N*m (204 kgf*cm, 15 ft.*lbf)

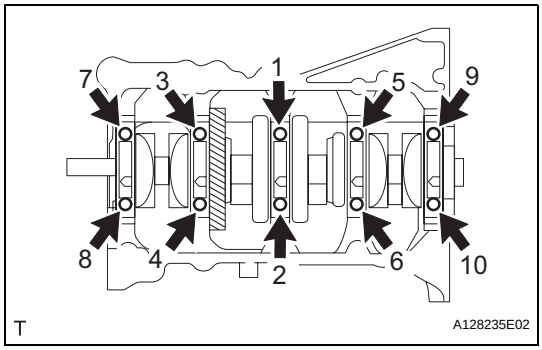

(2) Retighten the 10 main bearing cap bolts in the sequence shown in the illustration.
Torque: 40 N*m (408 kgf*cm, 30 ft.*lbf)

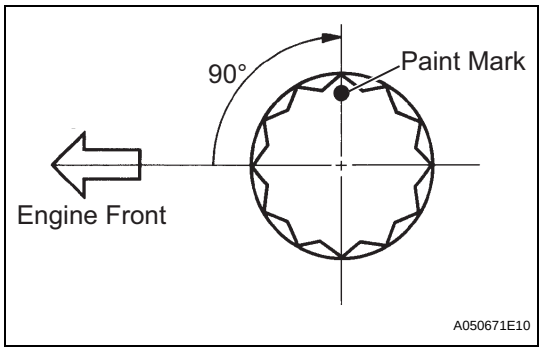

(g) Step 2
  (1) Mark the front of the bearing cap bolts with paint.
  (2) Retighten the bearing cap bolts by 90°in the numerical order shown in the illustration.
(h) Check that the paint mark is now at a 90°angle to the front.
(i) Check that the crankshaft turns smoothly.
(j) Check the crankshaft thrust clearance (See page EM-147).

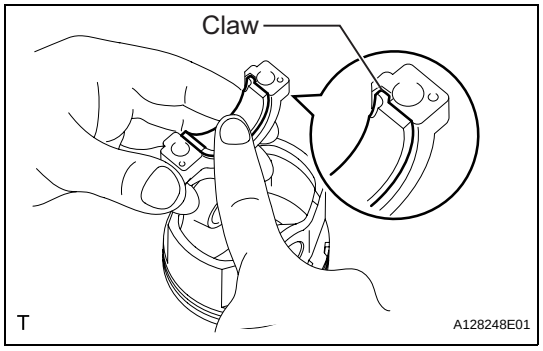

11. INSTALL CONNECTING ROD BEARING

(a) Align the bearing claw with the groove of the connecting rod or connecting cap.
NOTICE:
Do not apply engine oil to the bearings and the contact surfaces.

12. INSTALL PISTON SUB-ASSEMBLY WITH CONNECTING ROD
NOTICE:
The connecting rod cap bolts are tightened in 2 progressive steps.

(a) Apply engine oil to the cylinder walls, the pistons, and the surfaces of connecting rod bearings.

(b) Check the position of the piston ring ends.

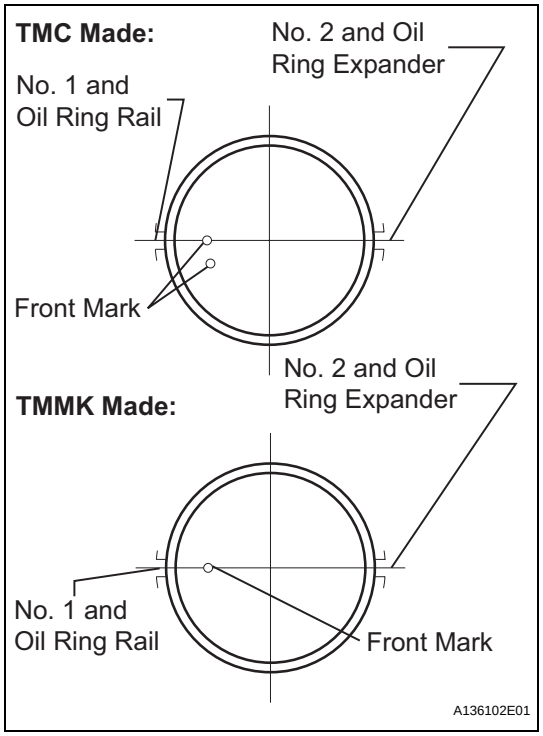

EM

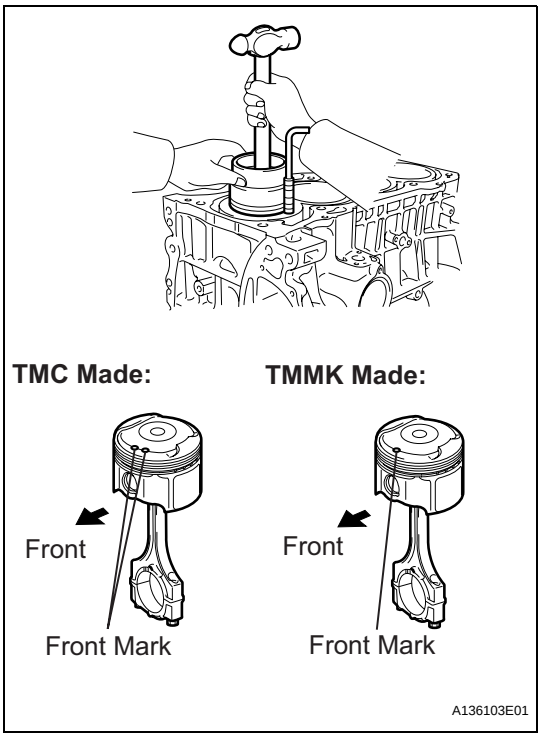

(c) Using a piston ring compressor, push the correctly numbered piston and connecting rod assemblies into each cylinder with the front mark of the piston facing forward.
NOTICE:
Match the numbered connecting rod cap with the connecting rod.

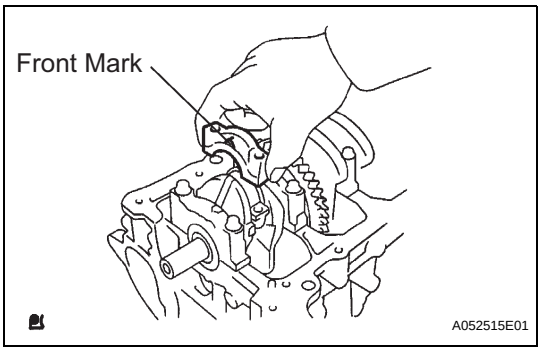

(d) Check that the protrusion of the connecting rod cap is facing in the correct direction.
(e) Apply a light coat of engine oil to the threads and under the heads of the connecting rod cap bolts.
(f) Install the connecting cap bolts.
NOTICE:
The connecting cap bolts should be tightened in 2 progressive steps.

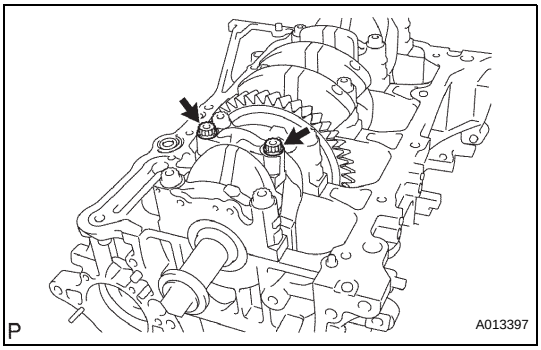

(g) Step 1
(1) Install and alternately tighten the bolts of the connecting rod cap in several steps.
Torque: 25 N*m (250 kgf*cm, 18 ft.*lbf)

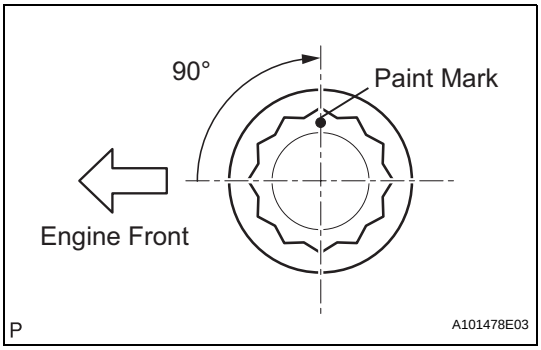

(h) Step 2
(1) Mark the front of the connecting rod cap bolts with paint.
(2) Retighten the cap bolts by 90°as shown in the illustration.
(i) Check that the crankshaft turns smoothly.
(j) Check the connecting rod thrust clearance (See page EM-140).

EM

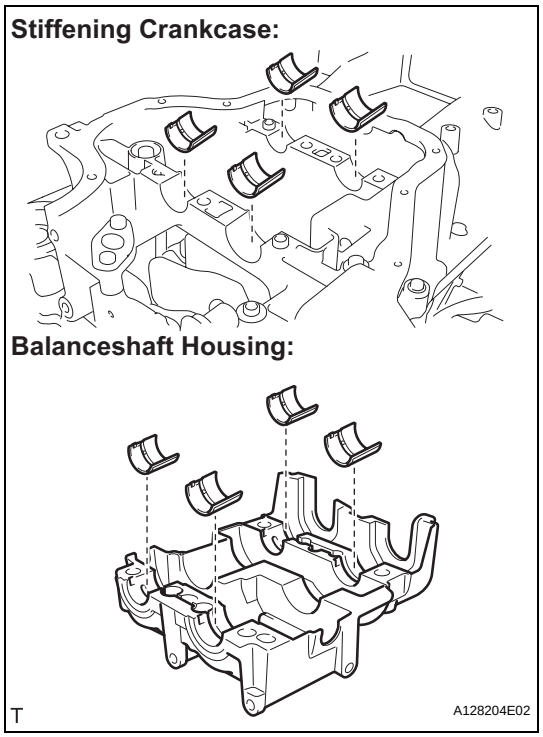

13. INSTALL NO. 1 BALANCESHAFT BEARING

(a) Install the bearings in the crankcase and balanceshaft housing.
NOTICE:
Do not apply engine oil to the bearings and the contact surfaces.

(b) Apply a light coat of engine oil to the bearings.

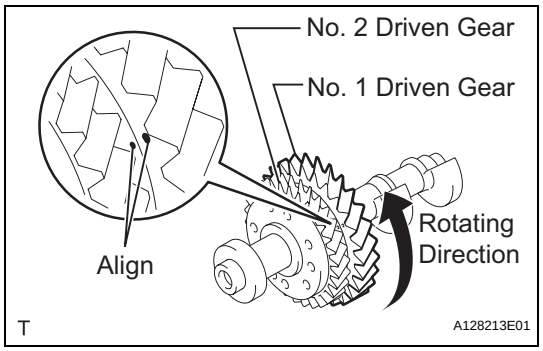

14. INSTALL NO. 1 AND NO. 2 BALANCESHAFT SUB-ASSEMBLY

(a) Rotate the driven gear No. 1 of balanceshaft No. 1 in the rotating direction until it hits the stopper.
NOTICE:
Confirm that the matchmarks on driven gears No. 1 and No. 2 are matched.

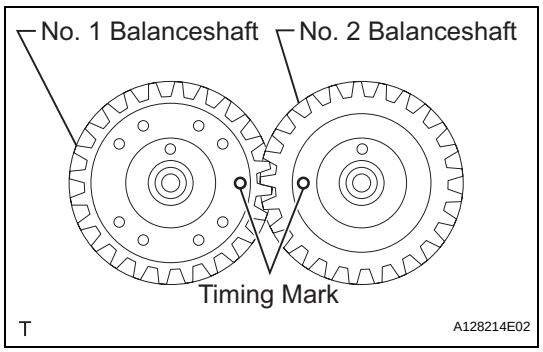

(b) Align the timing marks of the No. 1 and No. 2 balanceshafts as shown in the illustration.

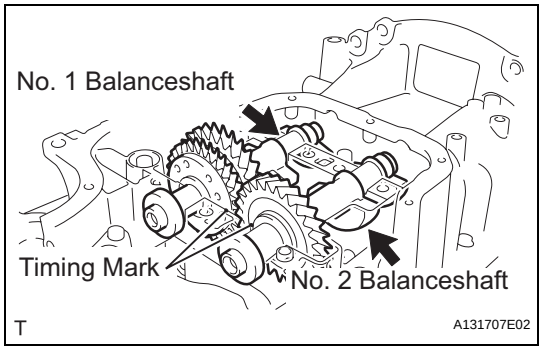

(c) Place the No. 1 and No. 2 balanceshafts on the crankcase.

(d) Apply a light coat of engine oil under the heads of the balanceshaft housing bolts.

(e) Install the balanceshaft housing bolts.
NOTICE:
The balance shaft housing bolts are tightened in 2 progressive steps.

EM

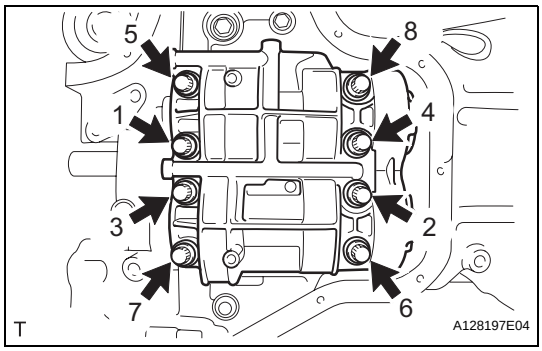

(f) Step 1
(1) Install and uniformly tighten the 8 bolts in the sequence shown in the illustration.
Torque: 22 N*m (220 kgf*cm, 16 ft.*lbf)

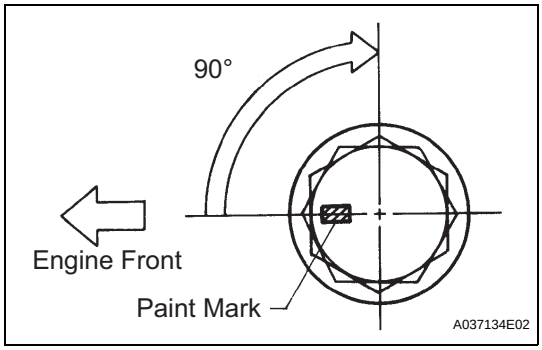

(g) Step 2
(1) Mark the front side of each balanceshaft housing bolt head with paint.
(2) Retighten the bolts by 90°as shown in the illustration.
(3) Check that the paint marks are now at a 90°angle to the front.

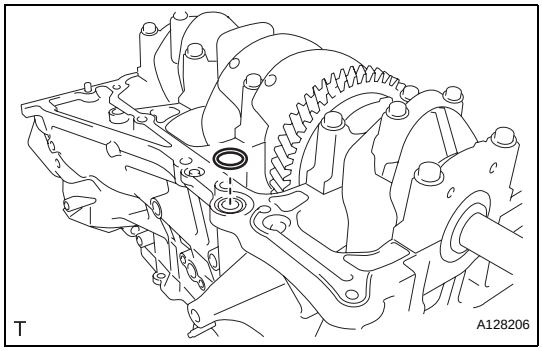

15. INSTALL STIFFENING CRANKCASE ASSEMBLY
(a) Place a new O-ring on the cylinder block, as shown in the illustration.
(b) Temporarily tighten the pulley set bolt.

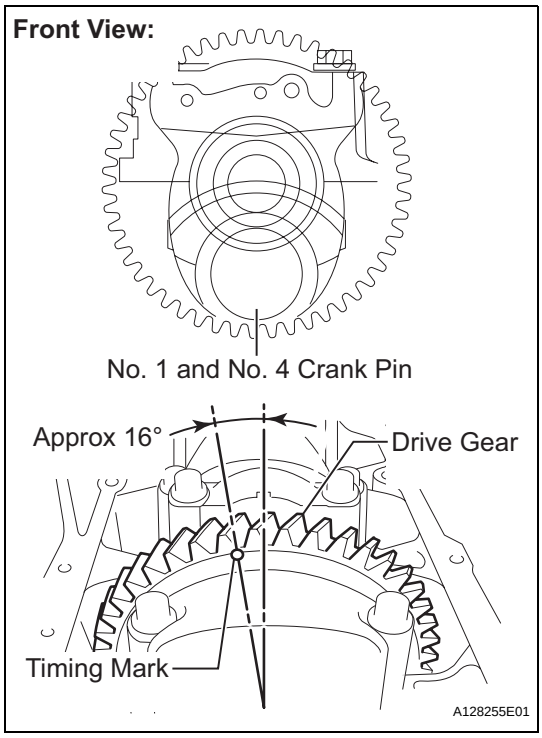

(c) Turn the crankshaft to set the crank pins of the No. 1 and No. 4 cylinders to the bottom.
HINT:
Make sure that the timing mark on the balanceshaft drive gear is positioned as shown in the illustration.

EM

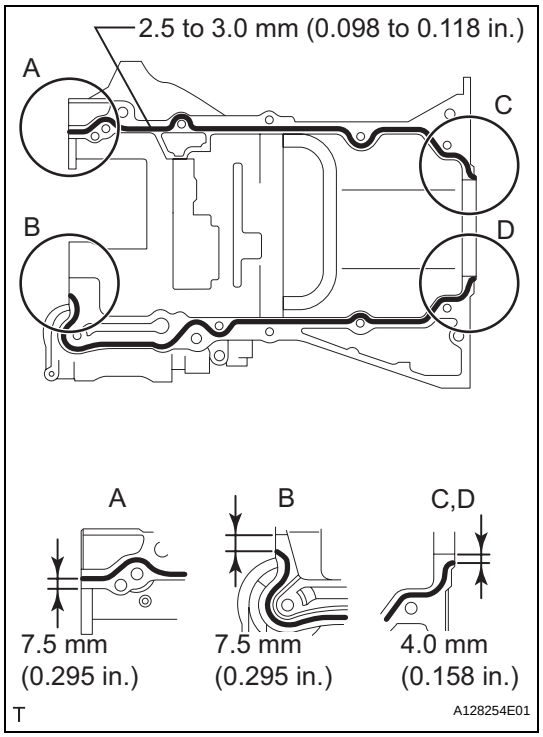

(d) Apply seal packing in a continuous bead (diameter: 2.5 to 3.0 mm (0.098 to 0.118 in.)) to the places shown in the illustration.

Seal packing:

Toyota Genuine Seal Packing Black, Three bond 1207B or Equivalent

NOTICE:

- **Remove any oil from the contact surface.**
- **Install the crankcase within 3 minutes after applying seal packing.**
- **Do not start the engine for at least 2 hours after installing the crankcase stiffener.**

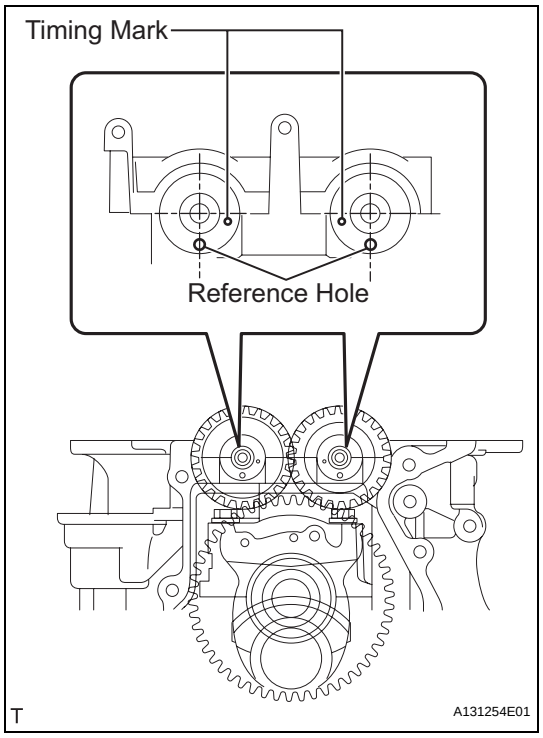

(e) Install the stiffening crankcase so that the reference holes on the balanceshafts are positioned as shown in the illustration.

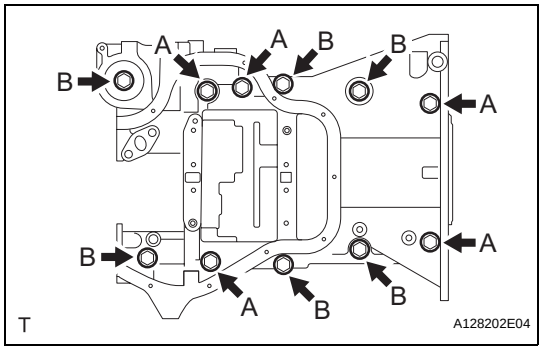

(f) Temporarily install the crankcase with the 11 bolts.

Bolt length

Item	Length
Bolt A	122 mm (4.803 in.)
Bolt B	45 mm (1.772 in.)

EM

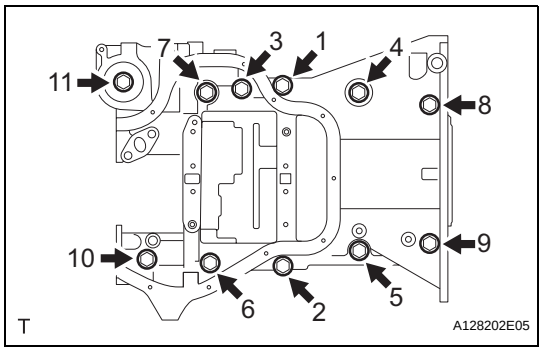

(g) Uniformly tighten the 11 bolts in the sequence shown in the illustration.
Torque: 24 N*m (245 kgf*cm, 18 ft.*lbf)

(h) Wipe off the excess seal packing with a clean piece of cloth.

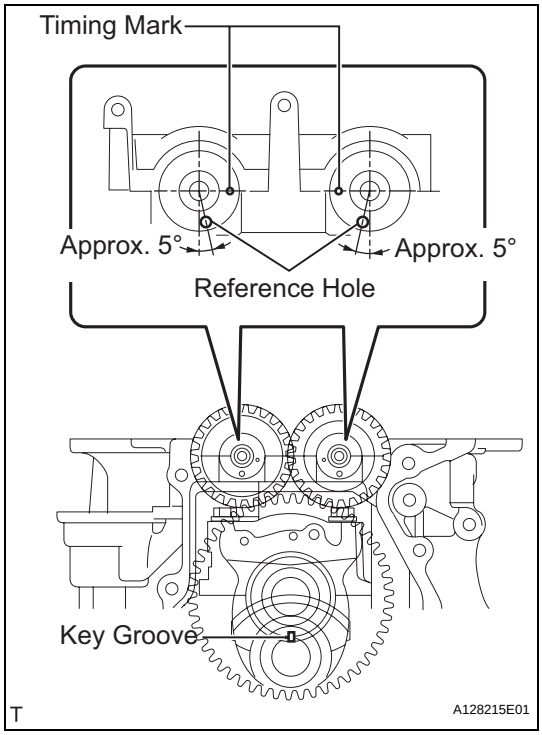

(i) Turn the crankshaft again to set the key groove to the bottom. Make sure that the timing marks are aligned as shown in the illustration.
HINT:
An 'O' is stamped as a timing mark.

(j) Remove the pulley set bolt.

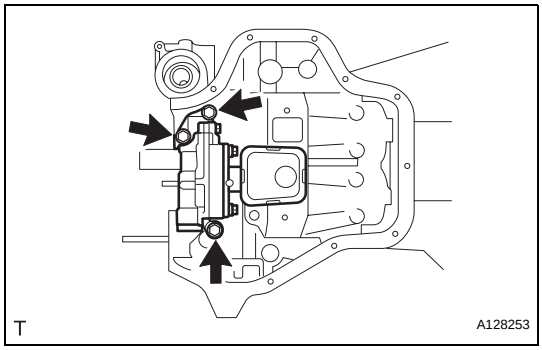

16. INSTALL OIL PUMP ASSEMBLY

(a) Install a new gasket and oil pump with the 3 bolts.
Torque: 19 N*m (194 kgf*cm, 14 ft.*lbf)

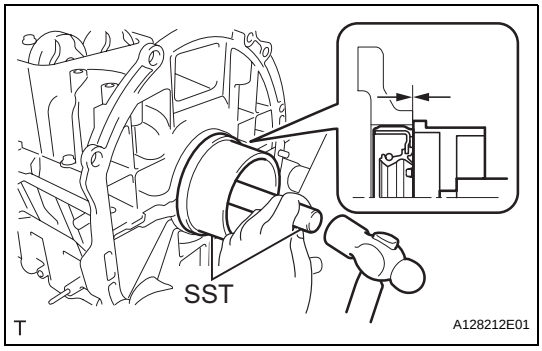

17. INSTALL ENGINE REAR OIL SEAL

(a) Using SST and a hammer, evenly tap the oil seal until its surface is flush with the rear oil seal retainer edge.
SST 09223-15030, 09950-70010 (09951-07100)
NOTICE:
Keep the lip free from foreign materials.

(b) Apply MP grease to a new oil seal lip.
NOTICE:
Wipe off extra grease on the crankshaft.

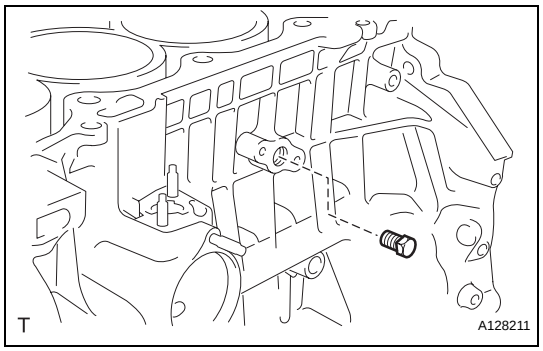

18. INSTALL NO. 1 TAPER SCREW PLUG (w/o Oil Cooler)

(a) Apply adhesive to 2 or 3 threads of the plug, and install the plug.
Torque: 26 N*m (265 kgf*cm, 19 ft.*lbf)
Adhesive:
Toyota Genuine Adhesive 1324, Three Bond 1324 or Equivalent

19. INSTALL OIL CONTROL VALVE FILTER

(a) Check that no foreign matter is on the mesh part of the filter.

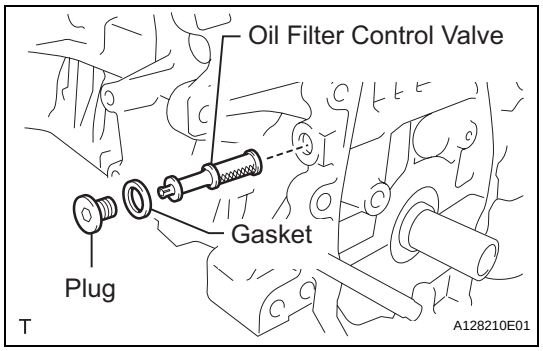

(b) Using an 8 mm socket hexagon wrench, install a new gasket and the oil control valve filter with the screw plug.
Torque: 30 N*m (306 kgf*cm, 22 ft.*lbf)
NOTICE:
Do not touch the mesh when installing the oil control valve filter.

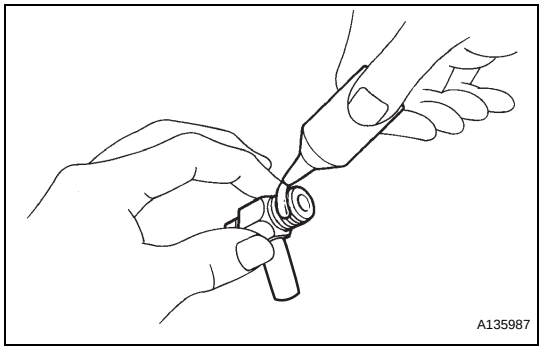

20. INSTALL CYLINDER BLOCK WATER DRAIN COCK SUB-ASSEMBLY (w/o Oil Cooler)

(a) Apply adhesive around the drain cock.
Adhesive:
Toyota Genuine Adhesive 1344, Three Bond 1344 or Equivalent

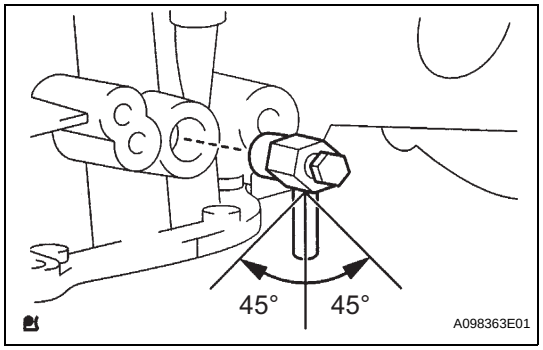

(b) Install the water drain cock within the range shown in the illustration.
Torque: 25 N*m (255 kgf*cm, 18 ft.*lbf)
NOTICE:
Do not rotate the drain cocks more than 1 revolution (360°) after tightening the drain cocks to the specified torque.

(c) Install the water drain cock plugs to the water drain cocks.
Torque: 13 N*m (130 kgf*cm, 9 ft.*lbf)

EM

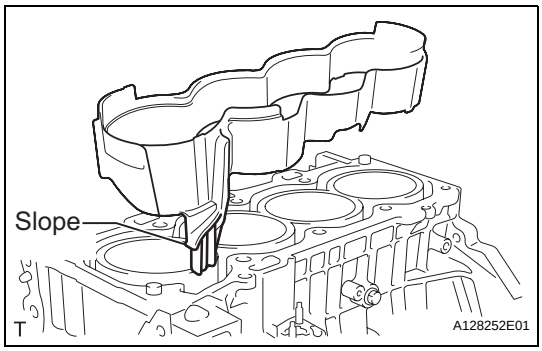

21. INSTALL CYLINDER BLOCK WATER JACKET SPACER

(a) Install the water jacket spacer as shown in the illustration.
HINT:
Be sure to face the slope to the front of the engine.

22. INSTALL CYLINDER HEAD GASKET (See page EM-70)

23. INSTALL CYLINDER HEAD SUB-ASSEMBLY (See page EM-70)

24. INSTALL CAMSHAFT TIMING OIL CONTROL VALVE ASSEMBLY

(a) Apply a light coat of engine oil to a new O-ring, then install it onto the camshaft timing oil control valve.

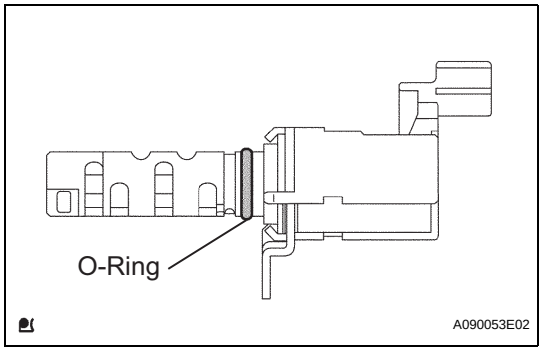

(b) Install the camshaft timing oil control valve with the bolt.
Torque: 9.0 N*m (92 kgf*cm, 80 in.*lbf)

25. INSTALL CAMSHAFT TIMING GEAR ASSEMBLY (See page EM-42)

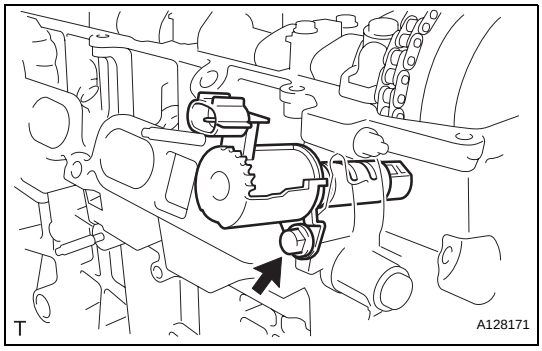

26. INSTALL CAMSHAFT TIMING SPROCKET

(a) Clamp the camshaft in a vise.
(b) Tighten the flange bolt with the camshaft timing sprocket fixed.
Torque: 54 N*m (551 kgf*cm, 40 ft.*lbf)

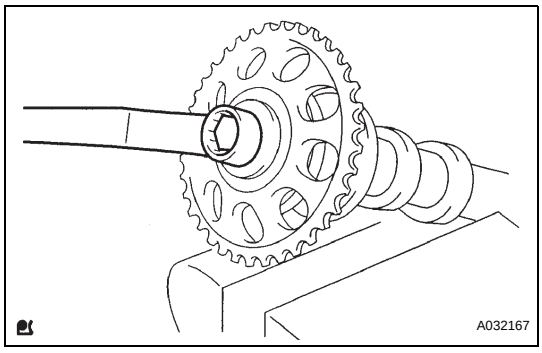

27. INSTALL NO. 1 CAMSHAFT BEARING

(a) Install the No. 1 camshaft bearing.

28. INSTALL NO. 2 CAMSHAFT BEARING (See page EM-71)

29. INSTALL CAMSHAFT

(a) Apply a light coat of engine oil to the journal portion of the camshaft.

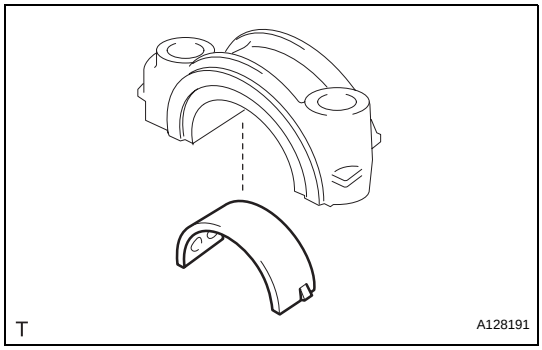

EM

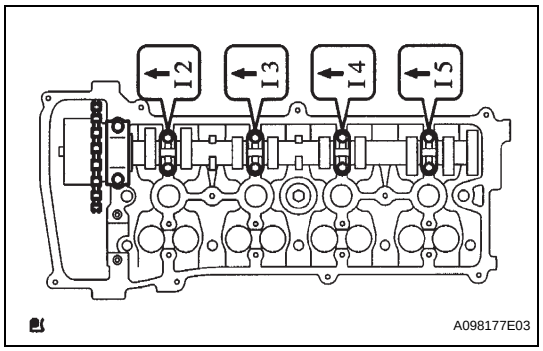

(b) Examine the front marks and numbers, and check that the order is as shown in the illustration. Then install the bearing caps into the cylinder head.

(c) Apply a light coat of engine oil to the threads and under the heads of the bearing cap bolts.

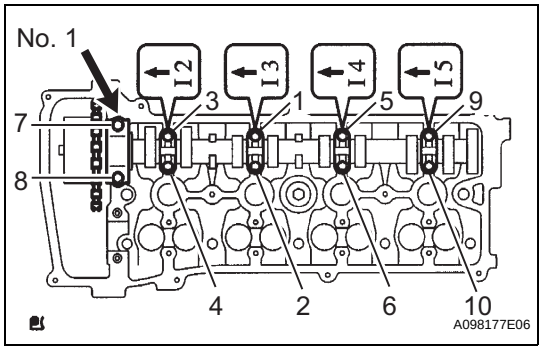

(d) Using several steps, uniformly tighten the 10 bearing cap bolts in the sequence shown in the illustration.

Torque: No. 1 Bearing cap
30 N*m (301 kgf*cm, 22 ft.*lbf)
No. 3 Bearing cap
9.0 N*m (92 kgf*cm, 80 in.*lbf)

EM

30. INSTALL NO. 2 CAMSHAFT

(a) Apply a light coat of engine oil to the journal portion of the No. 2 camshaft.

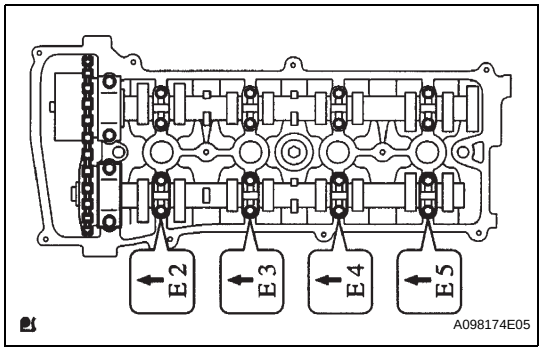

(b) Examine the front marks and numbers, and check that the order is as shown in the illustration. Then install the bearing caps onto the cylinder head.

(c) Apply a light coat of engine oil to the threads and under the heads of the bearing cap bolts.

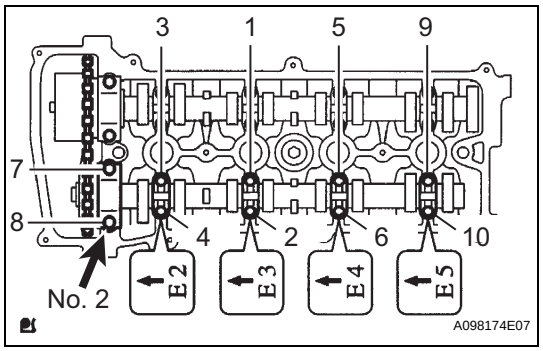

(d) Using several steps, uniformly tighten the 10 bearing cap bolts in the sequence shown in the illustration.

Torque: No. 1 Bearing cap
30 N*m (301 kgf*cm, 22 ft.*lbf)
No. 3 Bearing cap
9.0 N*m (92 kgf*cm, 80 in.*lbf)

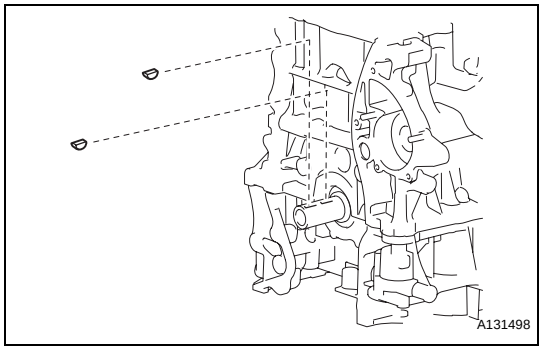

31. INSTALL KEYS

(a) Install the 2 keys.

32. INSTALL NO. 2 CHAIN SUB-ASSEMBLY (See page EM-27)

33. INSTALL CRANKSHAFT TIMING SPROCKET (See page EM-28)

34. INSTALL NO. 1 CHAIN VIBRATION DAMPER (See page EM-28)

35. INSTALL CHAIN SUB-ASSEMBLY (See page EM-28)

36. INSTALL CHAIN TENSIONER SLIPPER (See page EM-29)

37. INSTALL TIMING CHAIN GUIDE (See page EM-30)

38. INSTALL NO. 1 CRANKSHAFT POSITION SENSOR PLATE (See page EM-30)

39. INSTALL TIMING CHAIN CASE OIL SEAL

(a) Using SST, tap in a new oil seal until its surface is flush with the timing chain cover edge.
SST 09223-22010

(b) Apply a light coat of MP grease to the lip of the oil seal.
NOTICE:
Keep the gap between the timing chain cover edge and the oil seal free of foreign matter.

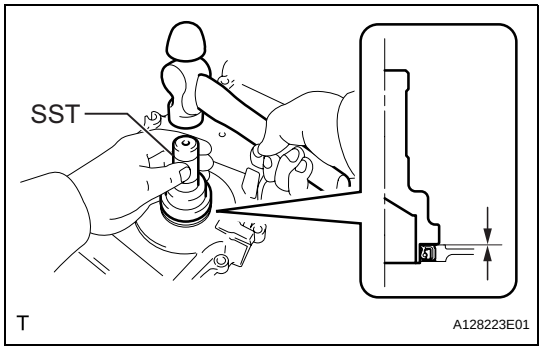

EM

40. INSTALL TIMING CHAIN COVER SUB-ASSEMBLY (See page LU-15)

41. INSTALL V-RIBBED BELT TENSIONER ASSEMBLY (See page EM-30)

42. INSTALL OIL PAN SUB-ASSEMBLY (See page EM-31)

43. INSTALL OIL PAN DRAIN PLUG

(a) Install a new gasket and oil pan drain plug with a new gasket.
Torque: 25 N*m (255 kgf*cm, 18 ft.*lbf)

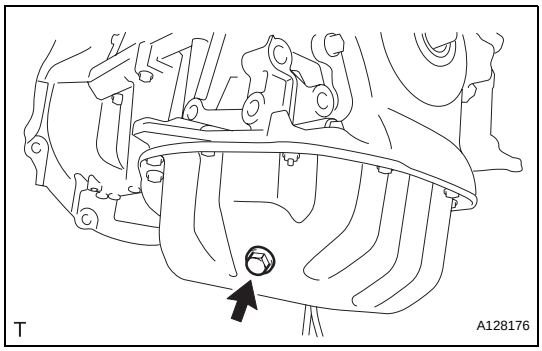

44. INSTALL WATER PUMP ASSEMBLY (See page CO-10)

45. INSTALL WATER PUMP PULLEY (See page CO-11)

46. INSTALL CRANKSHAFT POSITION SENSOR

(a) Apply a light coat of engine oil to the O-ring of the sensor.

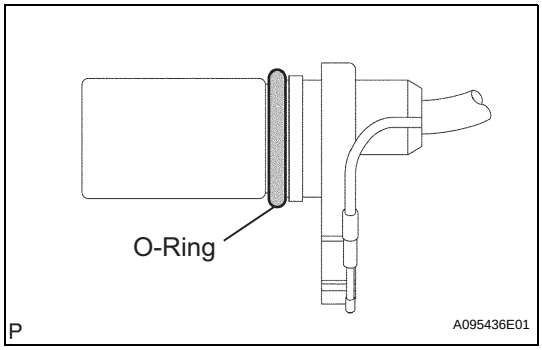

(b) Confirm that the wire harness of the sensor is placed as shown in the illustration.

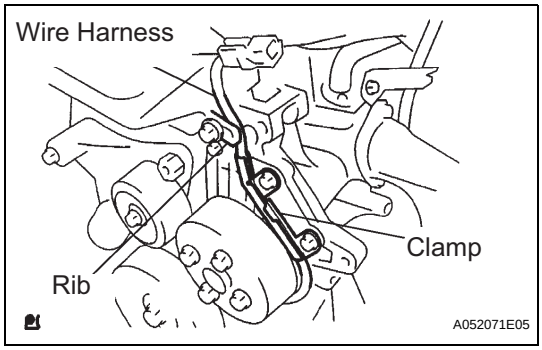

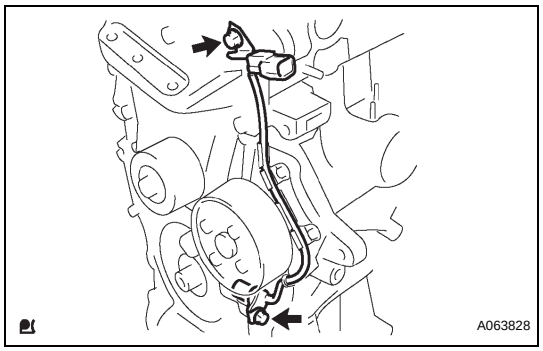

(c) Install the sensor with the 2 bolts.
Torque: 9.0 N*m (92 kgf*cm, 80 in.*lbf)

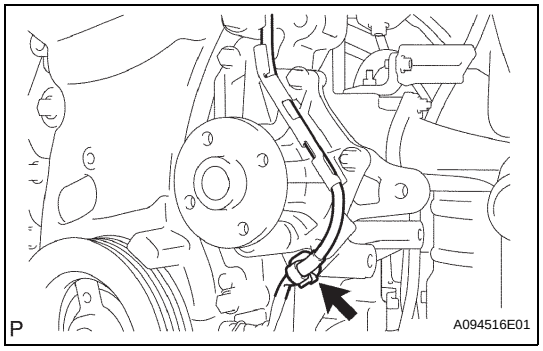

(d) Install the clamp of the crankshaft position sensor onto the water pump.

47. INSTALL CRANKSHAFT PULLEY (See page EM-76)

48. INSTALL NO. 1 CHAIN TENSIONER ASSEMBLY (See page EM-32)

49. INSPECT VALVE CLEARANCE (See page EM-8)

50. ADJUST VALVE CLEARANCE (See page EM-9)

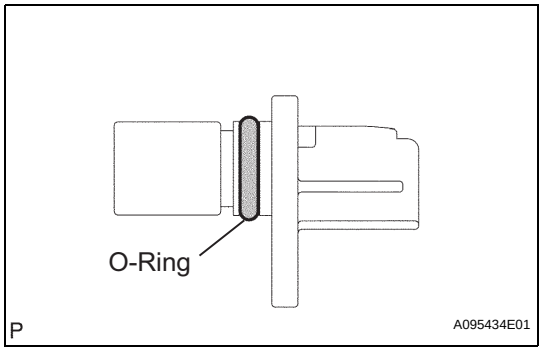

51. INSTALL CAMSHAFT POSITION SENSOR

(a) Apply a light coat of engine oil to the O-ring of the sensor.

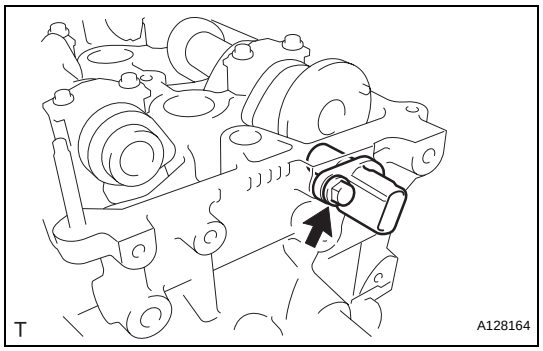

(b) Install the sensor with the bolt.
Torque: 9.0 N*m (92 kgf*cm, 80 in.*lbf)

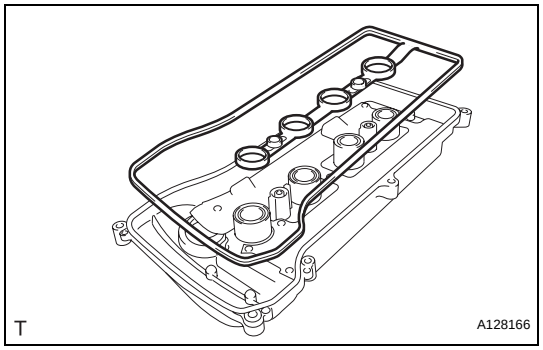

52. INSTALL CYLINDER HEAD COVER GASKET

(a) Install the gasket to the cylinder head cover.
NOTICE:
Remove any oil from the contact surface.

53. INSTALL CYLINDER HEAD COVER SUB-ASSEMBLY (See page EM-33)

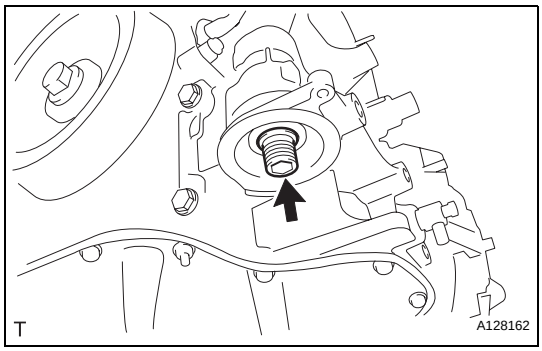

54. INSTALL OIL FILTER UNION (w/o Oil Cooler)

(a) Using a 12 mm hexagon wrench, install the oil filter union.
Torque: 30 N*m (306 kgf*cm, 22 ft.*lbf)

55. INSTALL OIL COOLER ASSEMBLY (w/ Oil Cooler)

(a) Clean the oil cooler contact surface on the cooler mounting.

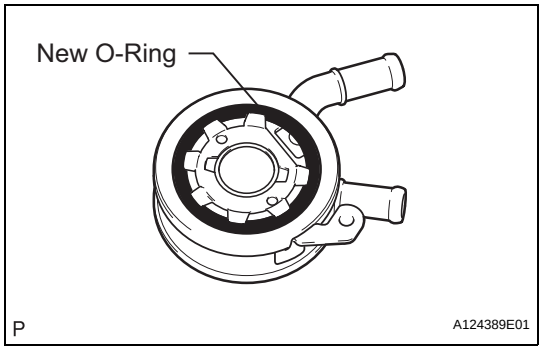

(b) Install a new O-ring to the oil cooler.
(c) Apply a light coat of engine oil to the threads and under the head of the union bolt.

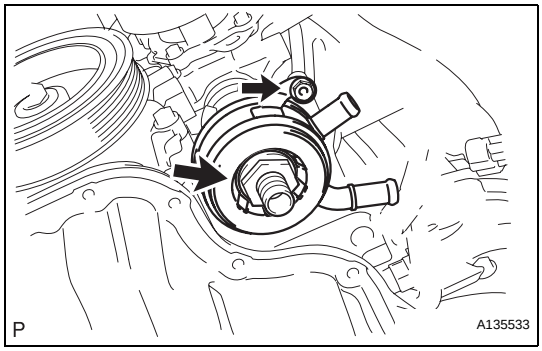

(d) Install the oil cooler with the plate washer, oil filter union and nut.
Torque: Oil Filter Union
79 N*m (806 kgf*cm, 58 ft.*lbf)
Nut
9.0 N*m (92 kgf*cm, 80 in.*lbf)
(e) Apply adhesive to the threads of the oil filter union.
Adhesive:
Toyota Genuine Adhesive 1324, Three Bond 1324 or Equivalent

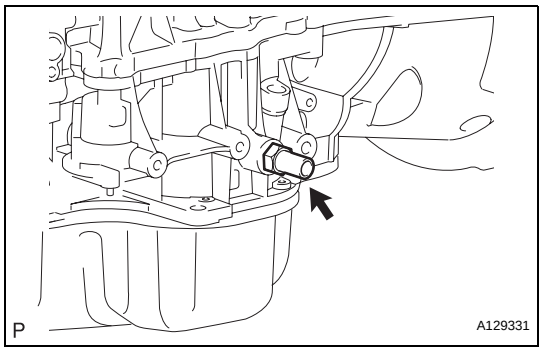

(f) Install the union bolt.
Torque: 25 N*m (255 kgf*cm, 18 ft.*lbf)

56. INSTALL OIL FILTER SUB-ASSEMBLY

(a) Check and clean the oil filter installation surface.
(b) Apply clean engine oil to the gasket of a new oil filter.
(c) Lightly screw the oil filter into place, and tighten it until the gasket contacts the seat.

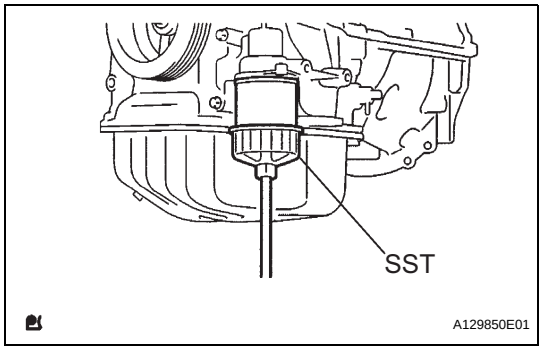

(d) When using a torque wrench:
(1) Using SST, tighten the oil filter.
SST 09228-06501
Torque: 13 N*m (133 kgf*cm, 10 ft.*lbf)

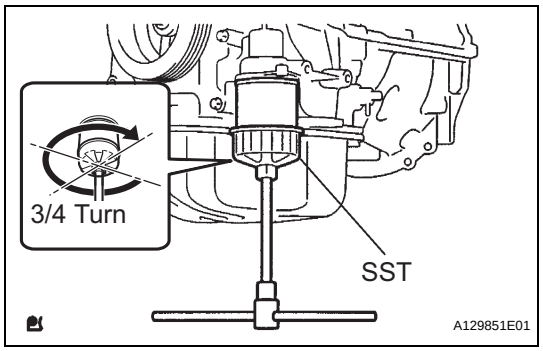

(e) When not using a torque wrench:
(1) Using SST, tighten it an additional 3/4 turn.
SST 09228-06501

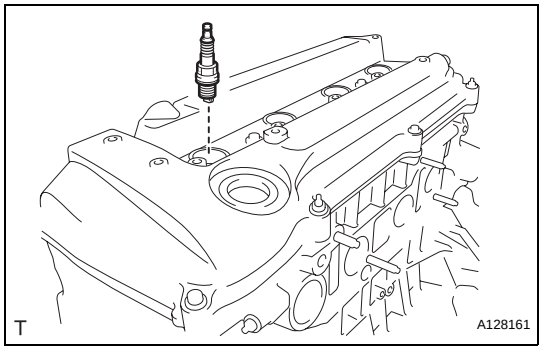

57. INSTALL SPARK PLUG
(a) Install the spark plugs.
Torque: 19 N*m (194 kgf*cm, 14 ft.*lbf)

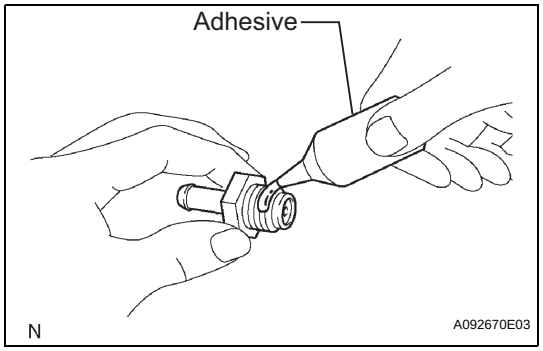

58. INSTALL VENTILATION VALVE SUB-ASSEMBLY
(a) Apply adhesive to the threads of the ventilation valve.

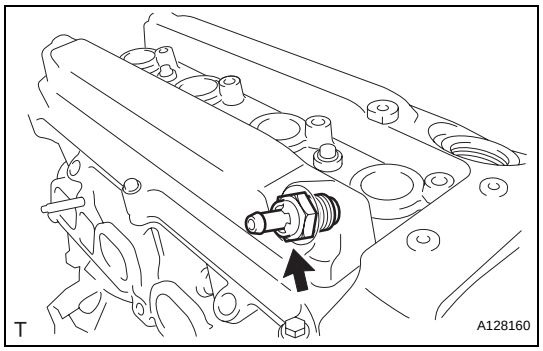

(b) Install the ventilation valve.
Torque: 19 N*m (194 kgf*cm, 14 ft.*lbf)
Adhesive:
Toyota Genuine Adhesive 1324, Three Bond 1324 or Equivalent

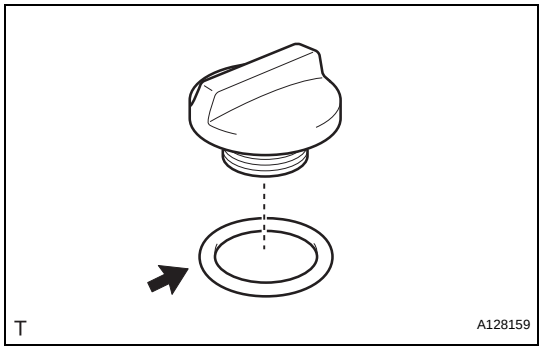

59. INSTALL OIL FILLER CAP GASKET
(a) Install a new gasket to the cap.

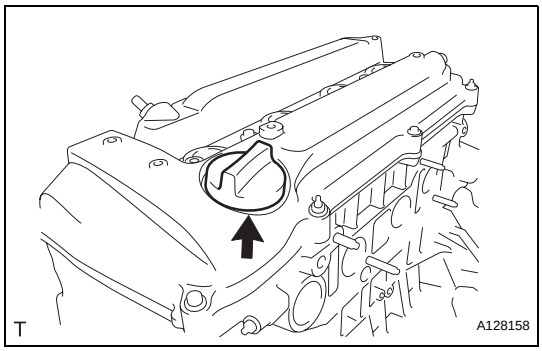

60. INSTALL OIL FILLER CAP SUB-ASSEMBLY

(a) Install the oil filler cap.