WORKSHOP MANUAL

TF SERIES

ELECTRICAL-BODY AND CHASSIS

SECTION 8

ISUZU

ISUZU

International Service & Parts
Tokyo, Japan

N O T I C E

Before using this Workshop Manual to assist you in performing vehicle service and maintenance operations, it is recommended that you carefully read and thoroughly understand the information contained in Section - 0 “GENERAL INFORMATION”.

All material contained in this Manual is based on the latest product information available at the time of publication.

All rights are reserved to make changes at any time without prior notice.

SECTION 8

ELECTRICAL-BODY AND CHASSIS

TABLE OF CONTENTS

PAGE

General Information 8– 1
Notes for Working on Electrical Items 8– 2
Symbols and Abbreviations 8– 8
Symbols 8– 8
Abbreviations 8– 9
Parts for Electrical Circuit 8– 10
Wiring 8– 10
Fuse 8– 12
Fusible Link 8– 12
Circuit Breaker 8– 13
Relay 8– 13
Diode 8– 14
Connector 8– 15
Battery 8– 16
Reading the Circuit Diagram 8– 19
Main Data and Specifications 8– 21
Bulb Specifications 8– 21
Relay and Fuse Box, Fuse Box Location 8– 23
Fuse and Fusible Link Location-1 (Relay and Fuse Box) 8– 27
Fuse and Fusible Link Location-2 (Relay and Fuse Box) 8– 28
Fuse and Circuit Breaker Location (Fuse Box) 8– 29
Relay Location-1 (Relay and Fuse Box) 8– 31
Relay Location-2 (Relay and Fuse Box – 6VD1) 8– 32
Relay Location-3 . . . . . 8– 33
Diode Location-1 . . . . . 8– 34
Diode Location-2 (6VD1) 8– 35
Fuse Block Circuit 8– 36
Reference Table of Fuse, Fusible Link and Circuit Breaker 8– 40

Grounding Point 8– 48
Reference Table 8– 48
Location 8– 52
Main Cable Harness Routing 8– 55
System Repair 8– 63
Start and Charging 8– 63
Engine Control Module (ECM) and Fuel Pump 8– 80
Emission Control System 8– 96
QOS System 8–102
Lighting 8–108
Hazard Warning Flasher, Turn Signal Light, Back Up Light,
Horn and Stop Light 8–138
Dome Light, Spot Light and Warning Buzzer 8–165
Windshield Wiper and Washer 8–178
Overdrive Off (A/T) 8–194
Transmission Control Module (TCM) 8–197
Meter, Warning Light and Indicator Light 8–200
Heater and Air Conditioning 8–257
Power Door Lock 8–267
Power Window 8–278
Audio, Clock and Cigarette Lighter 8–298
Power Door Mirror 8–306
Rear Defogger 8–318
Radiator Level Control Warning System 8–327
Connector List 8–330

GENERAL INFORMATION

The body and chassis electrical system operates on a twelve volt power supply with negative ground polarity.

The main harness consists of the engine harness, the instrument harness, the body harness, and the chassis harness.

The harnesses use a split corrugated tube to protect the wires from the elements.

Wire size is determined by current flow, circuit length, and voltage drop.

All wires have color-coded insulation.

Wire color-codes are shown in the circuit diagrams. This makes it easier to trace circuits and to make the proper connections.

Each circuit consists of the following:

1. Power source - The battery and the alternator
2. Wires - To carry electrical current through the circuit
3. Fuses - To protect the circuit against current overload
4. Relays - To protect voltage drop between the battery and the circuit parts and to protect the switch points against burning
5. Switches - To open and close the circuit
6. Load - Any device, such as a light or a motor, which converts the electrical current into useful work
7. Ground - To allow the current to flow back to the power source

NOTES FOR WORKING ON ELECTRICAL ITEMS

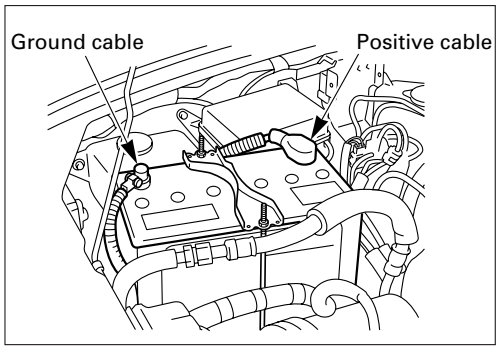

D08RV758

BATTERY CABLE

Disconnecting the Battery Cable

1. All switches should be "OFF" position.
2. Disconnect the battery ground cable.
3. Disconnect the battery positive cable.

CAUTION:
It is important that the battery ground cable be disconnected first.
Disconnecting the battery positive cable first can result in a short circuit.

Connecting the Battery Cable

Follow the disconnecting procedure in the reverse order to connect the battery cables.

CAUTION:
Clean the battery terminal and apply light coat of grease to prevent terminal corrosion.

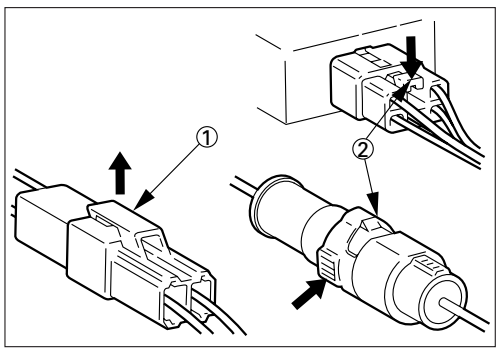

D08RV879

CONNECTOR HANDLING

Disconnecting the Connectors

Some connectors have a tang lock to hold the connectors together during vehicle operation.
Some tang locks are released by pulling them towards you ①.
Other tang locks are released by pressing them forward ②.
Determine which type of tang lock is on the connector being handled.

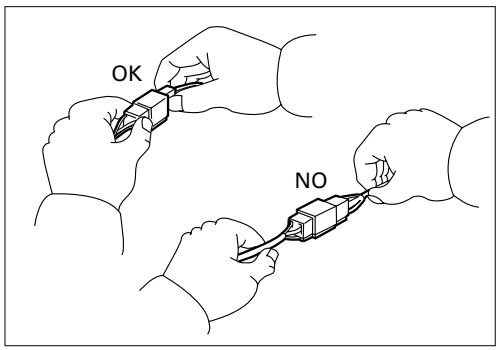

D08RV839

Firmly grasp both sides (male and female) of the connector.
Release the tang lock and carefully pull the two halves of the connector apart.
Never pull on the wires to separate the connectors. This will result in wire breakage.

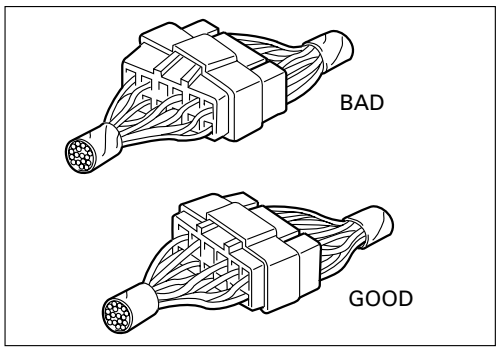

D08RV672

Connecting the Connectors

Firmly grasp both sides (male and female) of the connector.
Be sure that the connector pins and pin holes match.
Be sure that both sides of the connector are aligned with each other.
Firmly but carefully push the two sides of the connector together until a distinct click is heard.

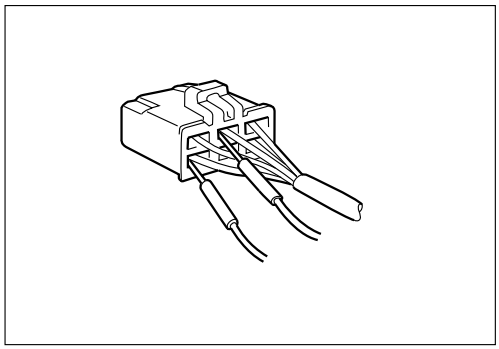
D08RV673

Connector Inspection

Use a circuit tester to check the connector for continuity.
Insert the test probes from the connector wire side.

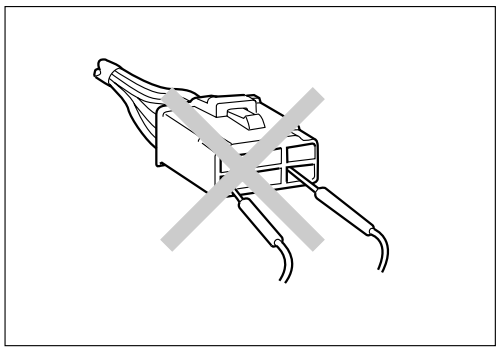
D08RV674

CAUTION
Never insert the circuit tester test probes into the connector open side to test the continuity.
Broken or open connector terminals will result.

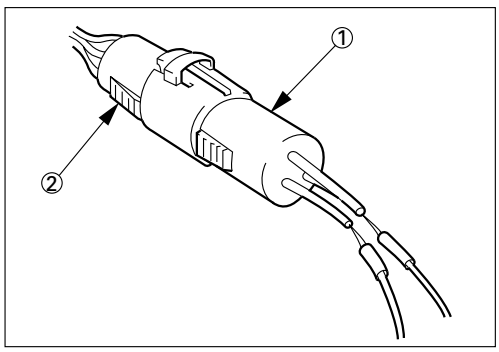

D08RV841

Waterproof Connector Inspection

It is not possible to insert the test probes into the connector wire side of a waterproof connector.
Use one side of a connector ① with its wires cut to make the test.
Connect the test connector to the connector ② to be tested.
Connect the test probes to the cut wires to check the connector continuity.

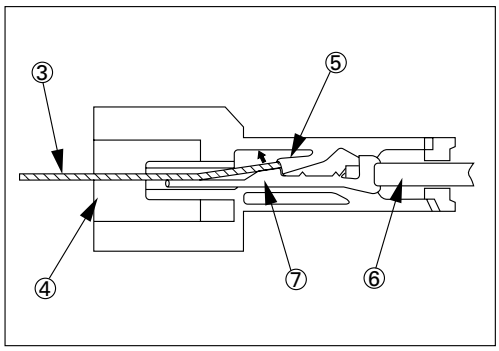

D08RV844

Connector Pin Removal

Connector Housing Tang Lock Type

1. Insert a slender shaft ③ into the connector housing open end ④.
2. Push the tang lock ⑤ up (in the direction of the arrow in the illustration).
   Pull the wire ⑥ with pin ⑦ free from the wire side of the connector.

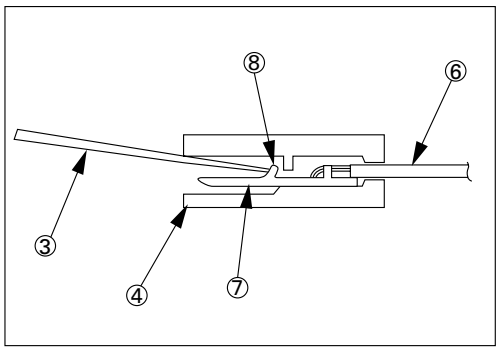

D08RV843

Pin Tang Lock Type

1. Insert a slender shaft ③ into the connector housing open end ④.
2. Push the tang lock ⑧ flat (toward the wire side of the connector).
   Pull the wire ⑥ with pin ⑦ free from the wire side of the connector.

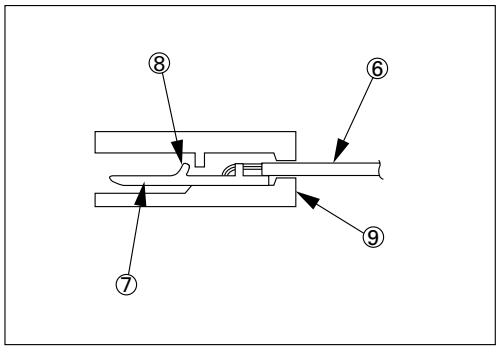

D08RV842

Connector Pin Insertion

1. Check that the tang lock ⑧ is fully up.
2. Insert the pin ⑦ from the connector wire side ⑨.
   Push the pin in until the tang lock closes firmly.
3. Gently pull on the wires ⑥ to make sure that connector pin is firmly set in place.

Fuse Replacement

The replacement fuse must have the same amperage specification as the original fuse.
Never replace a burn out fuse with a fuse of a different amperage specification. Doing so can result in an electrical fire or other serious circuit damage.

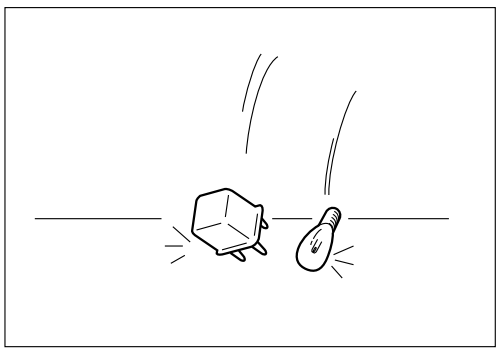

D08RV704

Parts Handling

Be careful for parts handling and any part should not be dropped or thrown, otherwise short circuit or disorder may result.

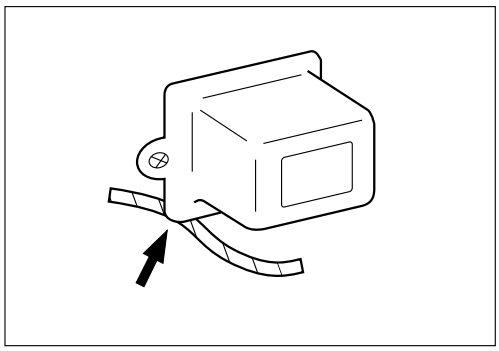

D08RV705

Wiring Harness

1. When assembling the parts, be careful not to bite or wedge the wiring harness.
2. All electrical connections must be kept clean and tight.

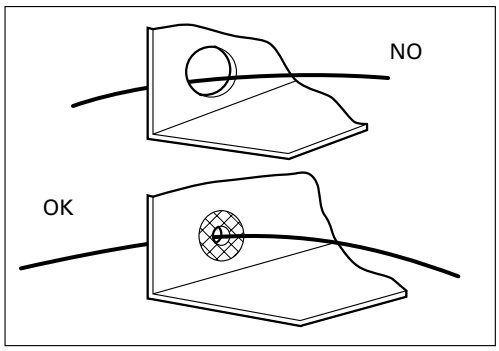

D08RV836

3. Use a grommet or guard tube to protect the wiring harness from contacting a sharp edge or surface.

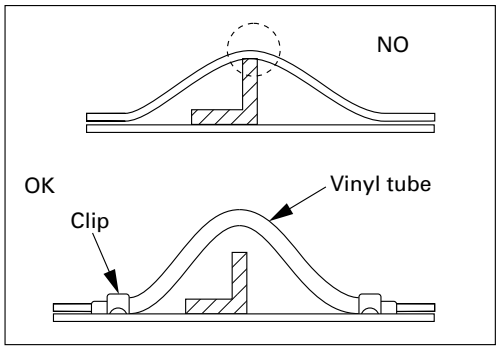

D08RV837

4. Position the wiring harness with enough clearance from the other parts and guard the wiring harness with a vinyl tube to avoid direct contact.

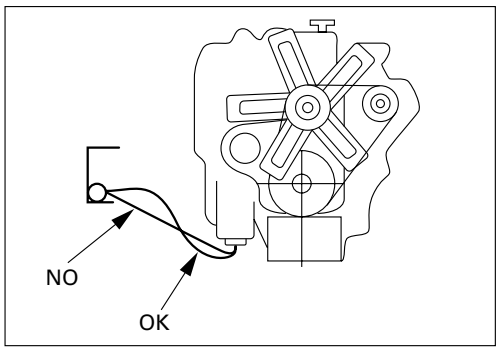

D08RV838

5. The wiring harness between engine and chassis should be long enough to prevent chafing or damage due to various vibrations.

SPLICING WIRE

Open the Harness

If the harness is taped, remove the tape. To avoid wire insulation damage, use a sewing "seam ripper" (available from sewing supply stores) to cut open the harness.
If the harness has a black plastic conduit, simply pull out the desired wire.

Cut the wire

Begin by cutting as little wire off the harness as possible. You may need the extra length of wire later if you decide to cut more wire off to change the location of a splice. You may have to adjust splice locations to make certain that each splice is at least 1-1/2" (40 mm) away from other splices, harness branches, or connectors.

Strip the insulation

When replacing a wire, use a wire of the same size as the original wire. Check the stripped wire for nicks or cut strands. If the wire is damaged, repeat the procedure on a new section of wire. The two stripped wire ends should be equal in length.

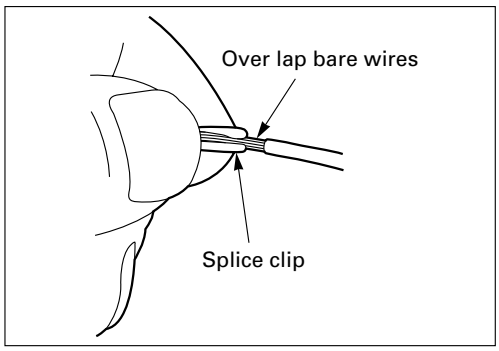

D08RV676

Crimp the Wires

Select the proper clip to secure the splice. To determine the proper clip size for the wire being spliced, follow the directions included with your clips. Select the correct anvil on the crimper. (On most crimpers your choice is limited to either a small or large anvil.) Overlap the two stripped wire ends and hold them between your thumb and forefinger.
Then, enter the splice clip under the stripped wires and hold it in place.

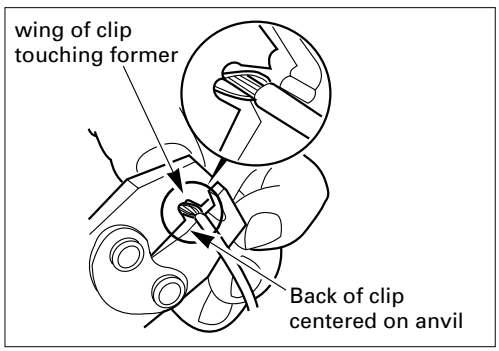

D08RV678

- Open the crimping tool to its full width and rest one handle on a firm flat surface.
- Center the back of the splice clip on the proper anvil and close the crimping tool to the point where the back of the splice clip touches the wings of the clip.
- Make sure that the clip and wires are still in the correct position. Then, apply steady pressure until the crimping tool closes.

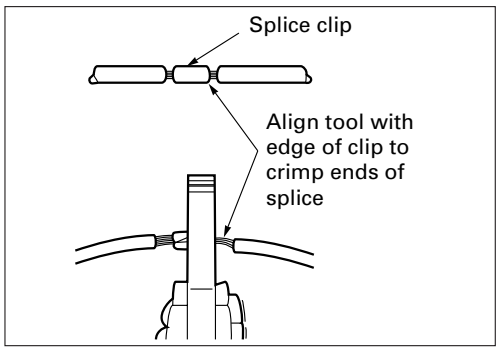

D08RV677

Before crimping the ends of the clip, be sure that:

- The wires extend beyond the clip in each direction.
- No strands of wire are cut loose, and
- No insulation is caught under the clip.

Crimp the splice again, once on each end. Do not let the crimping tool extend beyond the edge of the clip or you may damage or nick the wires.

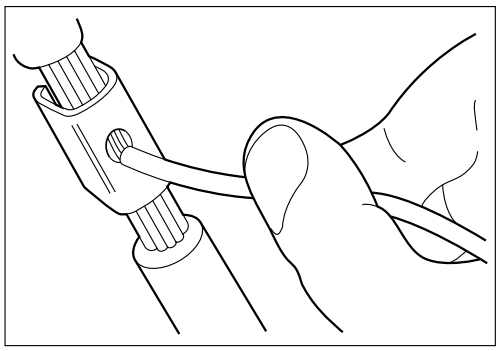

D08RV679

Solder

Apply 60/40 rosin core solder to the opening in the back of the clip. Follow the manufacturer's instructions for the solder equipment you are using.

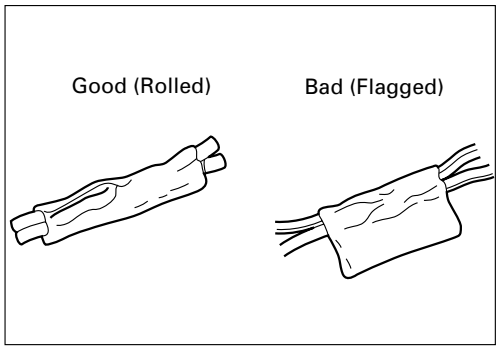

D08RV680

Tape the Splice

Center and roll the splicing tape. The tape should cover the entire splice. Roll on enough tape to duplicate the thickness of the insulation on the existing wires. Do not flag the tape. Flagged tape may not provide enough insulation, and the flagged ends will tangle with the other wires in the harness.

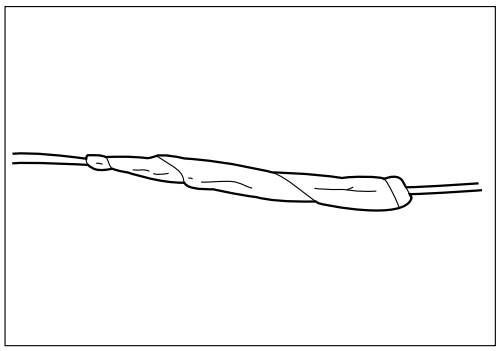

D08RV681

If the wire does not belong in a conduit or other harness covering, tape the wire again. Use a winding motion to cover the first piece of tape.

SYMBOLS AND ABBREVIATIONS

SYMBOLS

Symbol	Meaning of Symbol	Symbol	Meaning of Symbol
	Fuse		Bulb
	Fusible link		Double filament bulb
	Fusible link wire	M	Motor
	Switch		Variable resistor Rheostat
	Switch		Coil (inductor), solenoid, magnetic valve
	Switch (Normal close type)		Relay
	Contact wiring		
+ −	Battery		
	Diode		Connector
	Electronic Parts		Light emitting diode
	Resistor		Reed switch
	Speaker		Condenser
	Buzzer		Horn
	Circuit breaker		Vacuum switching valve

ABBREVIATIONS

Abbreviation	Meaning of Abbreviation	Abbreviation	Meaning of Abbreviation
A	Ampere (S)	LH	Left hand
ABS	Anti-lock brake system	LWB	Long wheel base
ASM	Assembly	MPI	Multiport fuel injection
AC	Alternating current	M/T	Manual transmission
A/C	Air conditioner	OD	Over drive
ACC	Accessories	OPT	Option
A/T	Automatic transmission	QOS	Quick on start
CARB	Carburetor	RH	Right hand
C/B	Circuit breaker	RR	Rear
CSD	Cold start device	RWAL	Rear wheel anti-lock brake system
DIS	Direct ignition system	SRS	Supplemental restraint system
EBCM	Electronic brake control module	ST	Start
ECGI	Electronic control gasoline injection	STD	Standard
ECM	Engine control module	SW	Switch
ECU	Electronic control unit	SWB	Short wheel base
EFE	Early fuel evaporation	TCM	Transmission control module
4A/T	4-speed automatic transmission	3A/T	3-speed automatic transmission
4X4	Four-wheel drive	V	Volt
FL	Fusible link	VSV	Vacuum switching valve
FRT	Front	W	Watt (S)
H/L	Headlight	WOT	Wide open throttle
IC	Integrated circuit	W/	With
IG	Ignition	W/O	Without
kW	kilowatt		

PARTS FOR ELECTRICAL CIRCUIT

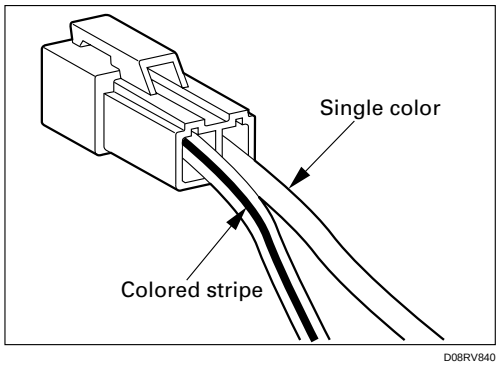

WIRING

Wire Color

All wires have color-coded insulation.
Wires belonging to system's main harness will have a single color. Wires belonging to a system's sub-circuits will have a colored stripe. Striped wires use the following code to show wire size and colors.

Example: 0.5 G / R

- R — Red (Stripe color)
- G — Green (Base color)
- 0.5 — Wire size (0.5 mm^2)

Abbreviations are used to indicate wire color within a circuit diagram.
Refer to the following table.

Wire Color-Coding

Color-Coding	Meaning	Color-Coding	Meaning
B	Black	BR	Brown
W	White	LG	Light green
R	Red	GR	Grey
G	Green	P	Pink
Y	Yellow	LB	Light blue
L	Blue	V	Violet
O	Orange		

Distinction of Circuit by Wire Base Color

Base color	Circuits	Base color	Circuits
B	Starter circuit and grounding circuit	Y	Instrument circuit
W	Charging circuit	L,O, BR, LG, GR, P, LB, V	Other circuits
R	Lighting circuit		
G	Signal circuit		

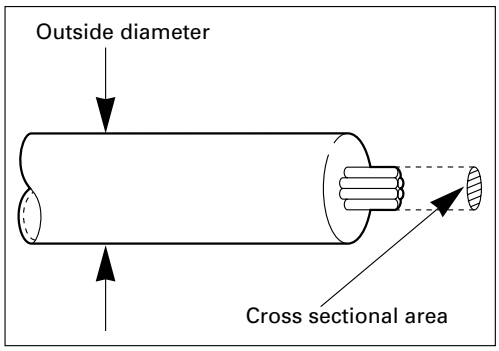

Wire Size

Wire size is specified with the metric gauge system.
The metric gauge system gives the wire size in cross sectional area measured in square millimeters.

Wire Size Specifications

Normal size	Cross sectional area (mm^2)	Outside diameter (mm)	Allowable current (A)
0.3	0.372	1.8	9
0.5	0.563	2.0	12
0.85	0.885	2.2	16
1.25	1.287	2.5	21
2	2.091	2.9	28
3	3.296	3.6	37.5
5	5.227	4.4	53
8	7.952	5.5	67
15	13.36	7.0	75
20	20.61	8.2	97

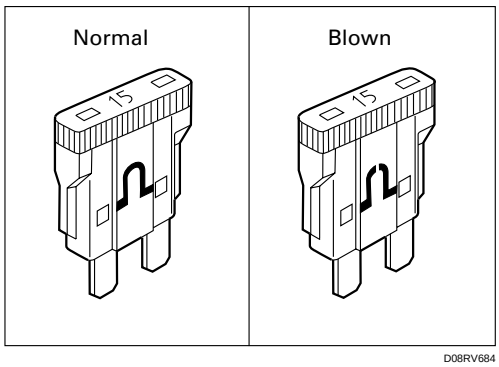

FUSE

Fuses are the most common form of circuit protection used in vehicle wiring. A fuse is a thin piece of wire or strip of metal encased in a glass or plastic housing. It is wired in series with the circuit it protects. When there is an overload of current in a circuit, such as a short of a ground, the wire or metal strip is designed to burn out and interrupt the flow of current. This prevents a surge of high current from reaching and damaging other components in the circuit.
Determine the cause of the overloaded before replacing the fuse.
Never replace a blown fuse with a fuse of a different amperage specification.
Doing so can result in an electrical fire or other serious circuit damage. A blown fuse is easily identified.

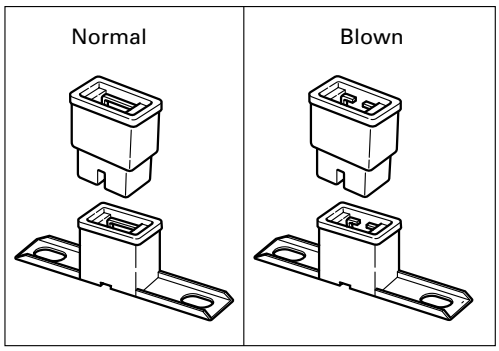

FUSIBLE LINK

The fusible link is primarily used to protect circuits where high amounts of current flow and where is would not be practical to use a fuse. For example, the starter circuit. When a current overload occurs, the fusible link melts open and interrupts the flow of current so as to prevent the rest of the wiring harness from burning.
Determine the cause of the overload before replacing the fusible link. The replacement fusible link must have the same amperage specification as the original fusible link.
Never replace a blown fusible link with fusible link of a different amperage specification. Doing so can result in an electrical fire or other serious circuit damage.
A blown fusible link is easily identified.

Fusible Link Specifications

Type	Rating	Case Color	Maximum Circuit Current (A)
Connector	30A	Pink	15
Connector	40A	Green	20
Bolted	50A	Red	25
Bolted	60A	Yellow	30
Bolted	80A	Black	40

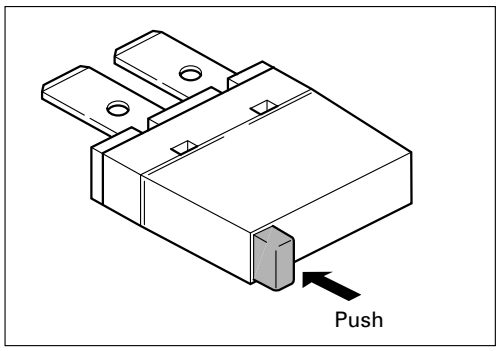

CIRCUIT BREAKER

The circuit breaker is a protective device designed to open the circuit when a current load is in excess of rated breaker capacity. If there is a short or other type of overload condition in the circuit, the excessive current will open the circuit between the circuit breaker terminals. The reset knob pops out when the circuit is open. Push the reset knob in place to restore the circuit after repairing it.

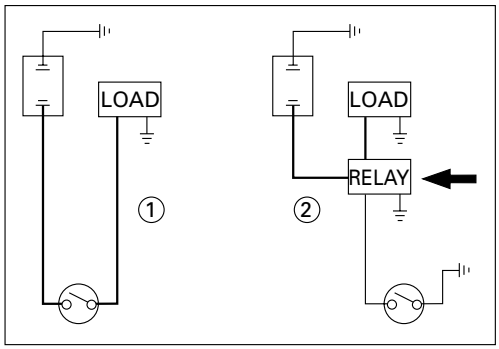

RELAY

Battery and load location may require that a switch be placed some distance from either component. This means a longer wire and a higher voltage drop ①. The installation of a relay between the battery and the load reduces the voltage drop ②.
Because the switch controls the relay, amperage through the switch can be reduced.

Relay Specifications and Configurations

Name/ Color	Rated voltage/ Coil resistance	Internal circuit
1T (MR5C)/ Black	12V Approx. 90Ω Minimum operating voltage: 7V at 25°C(77°F)	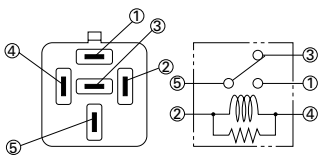
1T (MR5C)/ Brown	12V Approx. 90Ω Minimum operating voltage: 10.5V at 25°C(77°F)	060RV005

* Relay contact shown in the wiring diagram indicates condition before actuation.

DIODE

Diode Specifications and Configurations

SHAPE	MARK/ COLOR	CONSTRUCTION	CHECKING (THERE SHOULD BE CONTINUITY IN EITHER A OR B WHEN A CIRCUIT TESTER IS CONNECTED WITH DIODE TERMINAL)
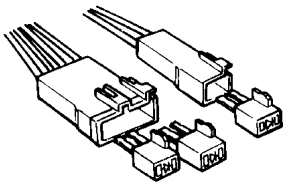	BLACK	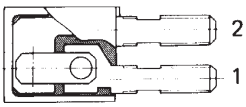	TERMINAL NO. (2, 1) CONNECTION PATTERN A: ⊕ ⊖ CONNECTION PATTERN B: ⊖ ⊕
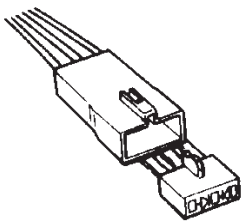	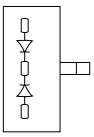 BLACK	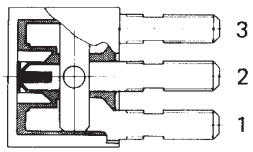	TERMINAL NO. (3, 2, 1) CONNECTION PATTERN A: ⊖ ⊕ / ⊕ ⊖ CONNECTION PATTERN B: ⊕ ⊖ / ⊖ ⊕
	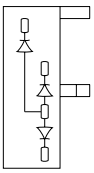 BLACK	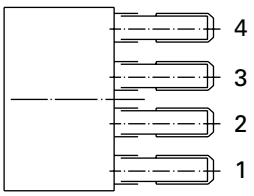	TERMINAL NO. (4, 3, 2, 1) CONNECTION PATTERN A: ⊕ ⊖ / ⊖ ⊕ / ⊖ ⊕ CONNECTION PATTERN B: ⊖ ⊕ / ⊖ ⊕ / ⊕ ⊖

Maximum Rating (Temp.=25°C)

Items	Rating	Remarks
Peak reverse voltage	400V	
Transient peak reverse voltage	500V	
Average output current	1.5A	Temp.=40°C
Working ambient temperature	–30°C~80°C	
Storage temperature	–40°C~100°C	

CONNECTOR

The connector pin shape determines whether the connector is male or female.
The connector housing configuration does not determine whether a connector is male or female.

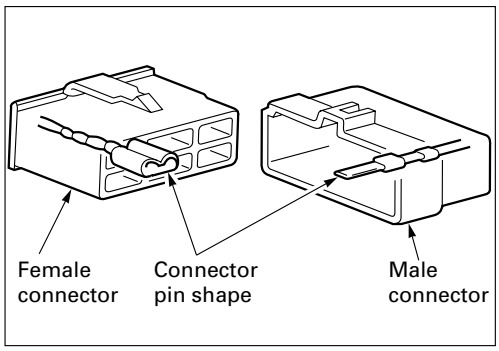

D08RV685

The symbol illustrated in the figure is used as connector in the circuit of this section.

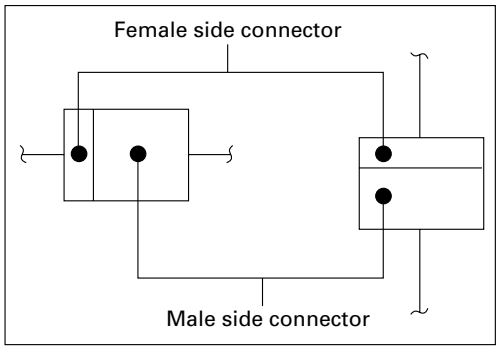

D08RV710

Connector is identified with a number.

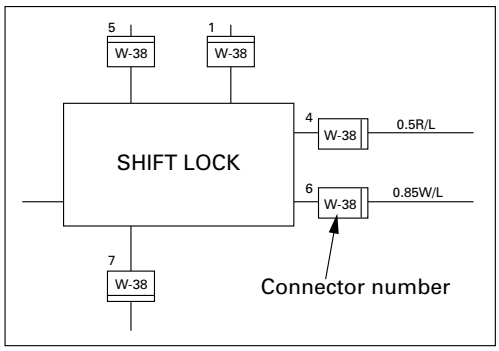

D08RV711

The applicable terminal number is shown for each connector.

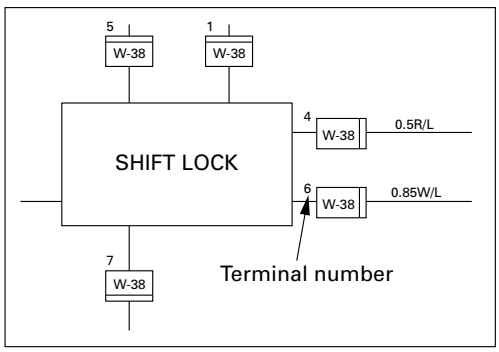

D08RV712

Connector terminal numbers are clearly shown.
Male side connector terminal numbers are in sequence from upper right to lower left.
Female side connector terminal numbers are in sequence from upper left to lower right.

NOTE:
For those connectors on which specific terminal numbers on symbols are shown, the terminal numbers or symbols are used in the circuit diagram, irrespective of the above rule.

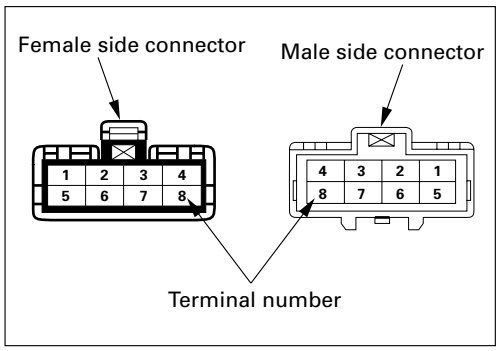

D08RV713

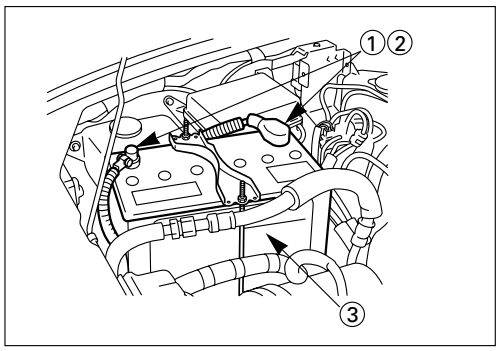

D08RV944

BATTERY

Inspection

1. Check the battery terminals ① for corrosion.
2. Check the battery cables ② for looseness.
3. Check the battery case ③ for cracks and other damage.
4. Check the battery electrolyte level.
   If the electrolyte level is excessively low, the battery must be replaced.
5. If the battery has a built-in hydrometer, perform the following steps:
   1) Carefully clean the battery upper surface.
   2) Check the hydrometer.
      The hydrometer design will vary with the battery manufacturer.
      Refer to the illustration shown on the battery.

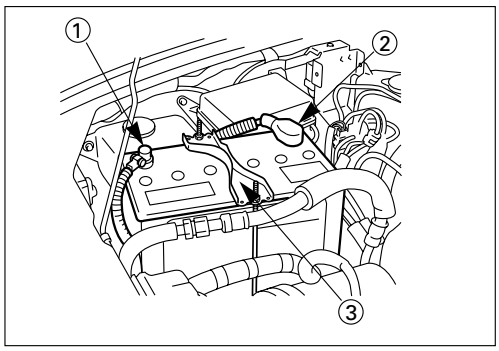

D08RV945

Battery Replacement

1. Disconnect the battery ground cable ①.
2. Disconnect the battery positive cable ②.
3. Remove the battery clamp ③.
4. Remove the battery

Caution:
It is important that the battery ground cable be removed first.
Removing the battery positive cable first can result in a short circuit.

Jump Starting the Engine with a Booster Battery

The following description assumes that you are using a booster battery mounted on a second vehicle.
The listed steps (with some minor modifications) are also applicable if you are using a naked booster battery or special battery charging equipment.

Caution:
Never push or tow the vehicle in an attempt to start it. Extensive damage to the emission system and other vehicle parts will result. (only catalytic converter vehicle)
Treat both the discharged battery and the booster battery with great care when using jumper cables.
Carefully follow the procedure outlined below.
Always be aware of the dangers of sparking.

Failure to follow the following procedure can result in:

a. Serious personal injury, especially to your eyes.

b. Extensive property damage from a battery explosion, battery acid discharge, or electrical fire.

c. Extensive damage to the electronic components of both vehicles.

Do not use a 24 volt booster battery. Serious damage to the vehicle's electrical system and electronic components will result.

Jump Starting Procedure

1. Set the parking brake on both vehicles.
2. If one or both vehicles is equipped with an automatic transmission, place the selector lever in the "PARK" position.

   If one or both vehicles is equipped with a manual transmission, place the gear shift in the "NEUTRAL" position.
3. Turn off the ignition on both vehicles.
4. Turn off all vehicle lights and accessories.
5. Check the built-in hydrometer on the discharged battery (If so equipped).

   If there is no hydrometer indication abandon the jump start procedure.
6. Be sure that the two vehicles are not touching.

   Attach the end of one jumper cable to the booster battery positive terminal.
7. Attach the other end of the same cable to the discharged battery positive terminal.
8. Once again, check that the booster battery has a 12-volt rating.
9. Attach one end of the remaining booster cable to the booster battery negative terminal.
10. Attach the other end of the booster cable to a solid ground (such as the air conditioner compressor mounting bracket or the alternator mounting bracket) in the engine room of the vehicle with the discharged battery.

    Be sure that the ground connection is at least 500 mm (20 in) from the discharged battery.

Caution:
Do not attach the booster cable to the discharged battery negative terminal.

11. Start the engine of the vehicle with the booster battery.

    Check that all unnecessary electrical accessories are off.

12. Start the engine of the vehicle with the discharged battery.

13. Remove the jumper cables in the reverse order to which they were attached.

Caution:
Be absolutely sure to remove the negative jumper cable from the vehicle with the discharged battery first.

READING THE CIRCUIT DIAGRAM

In this manual, each system has its own parts location illustration and circuit diagram. And connector configurations used in the circuit diagram are shown at the end of this manual.

PARTS LOCATION: The parts location shows the location of the connectors ① and the harnesses ② used in the each system.

CIRCUIT DIAGRAM: The circuit diagram shows the power supply ③, the load or loads ④ and the grounding point(s) ⑤.

CONNECTOR LIST: The connector configuration shows each connector's number ⑥, configuration ⑦ and the pin numbers ⑧.

PARTS LOCATION

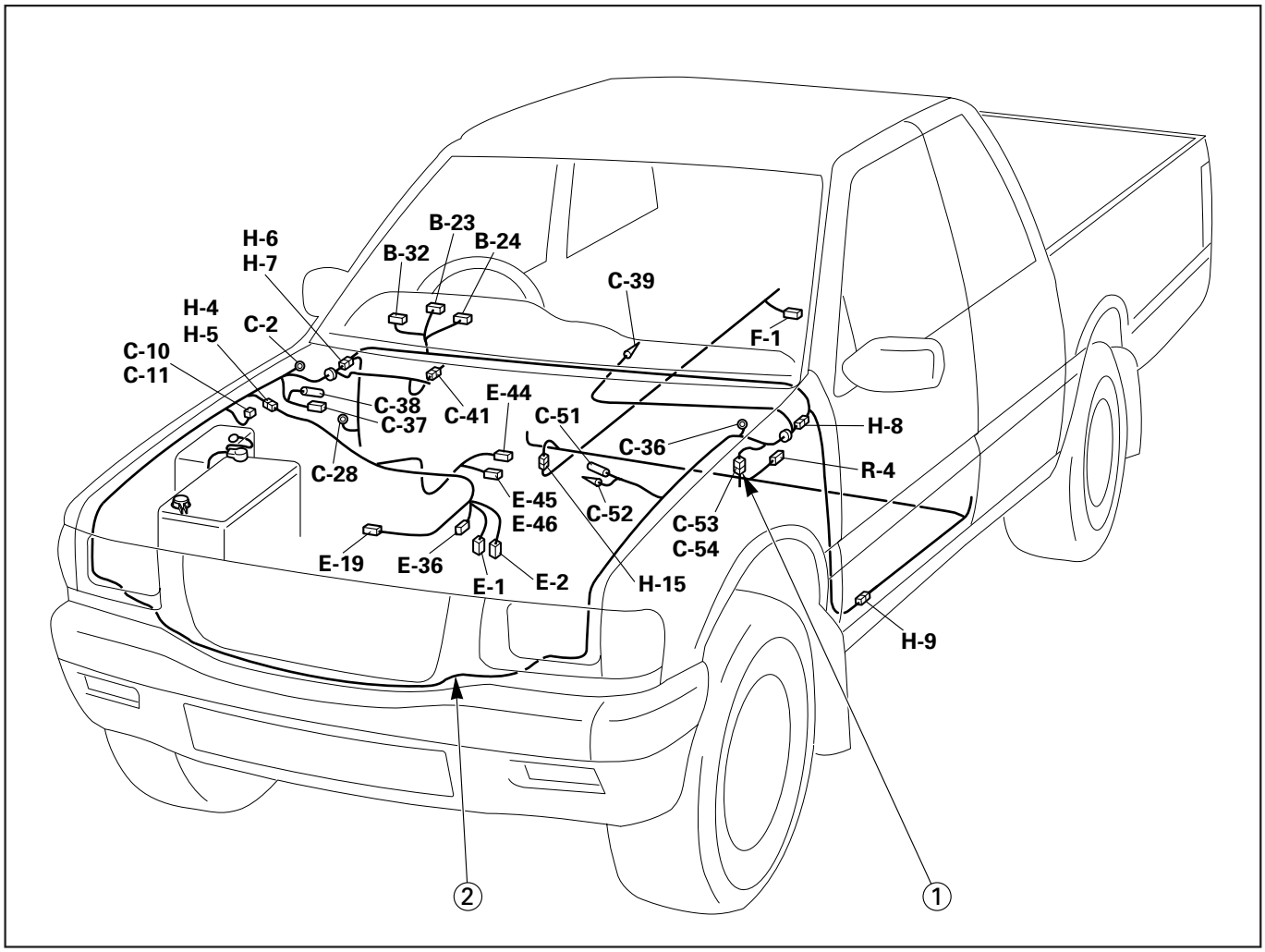

D08RV910

CIRCUIT DIAGRAM

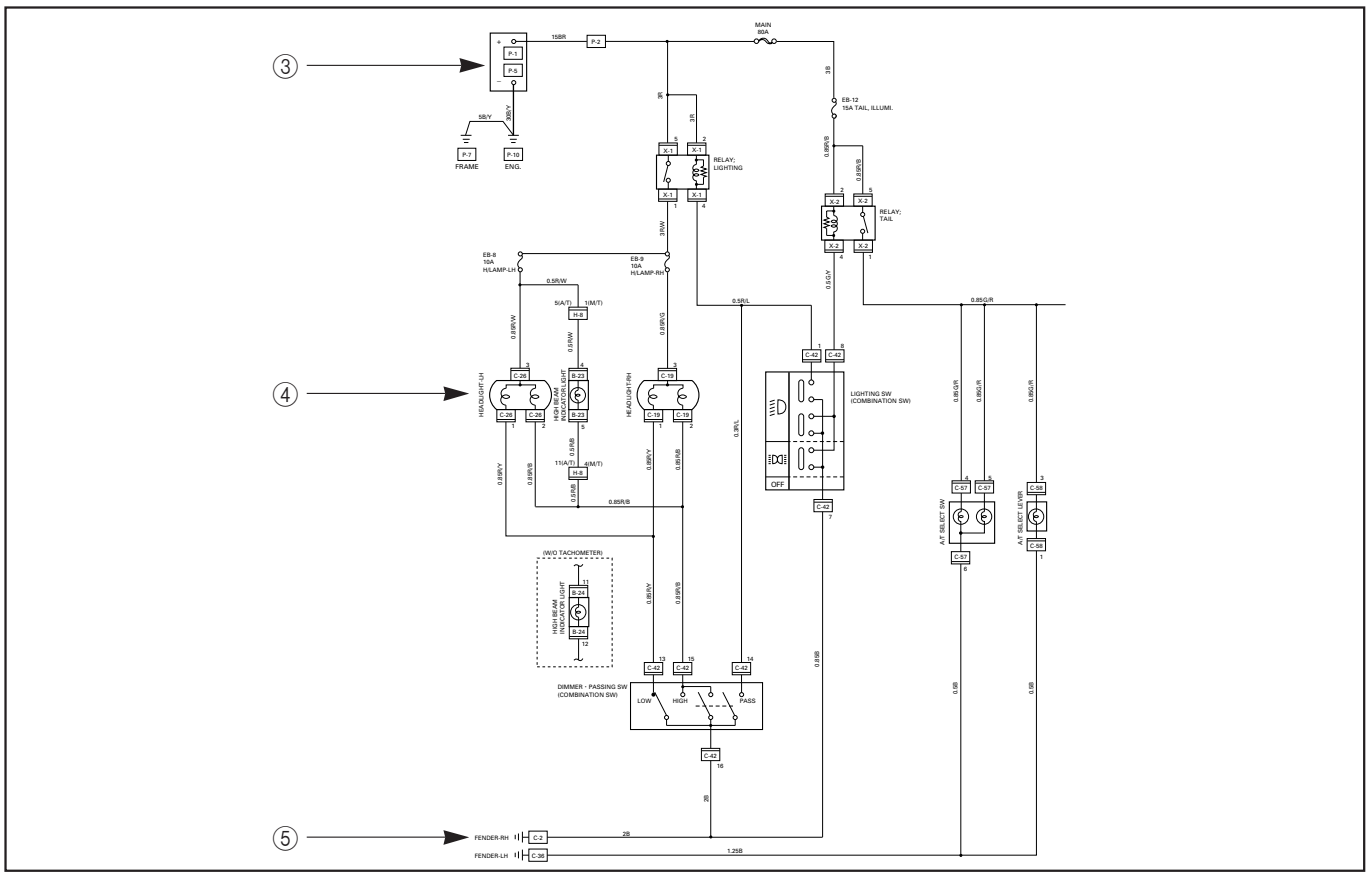

D08RV823

CONNECTOR LIST

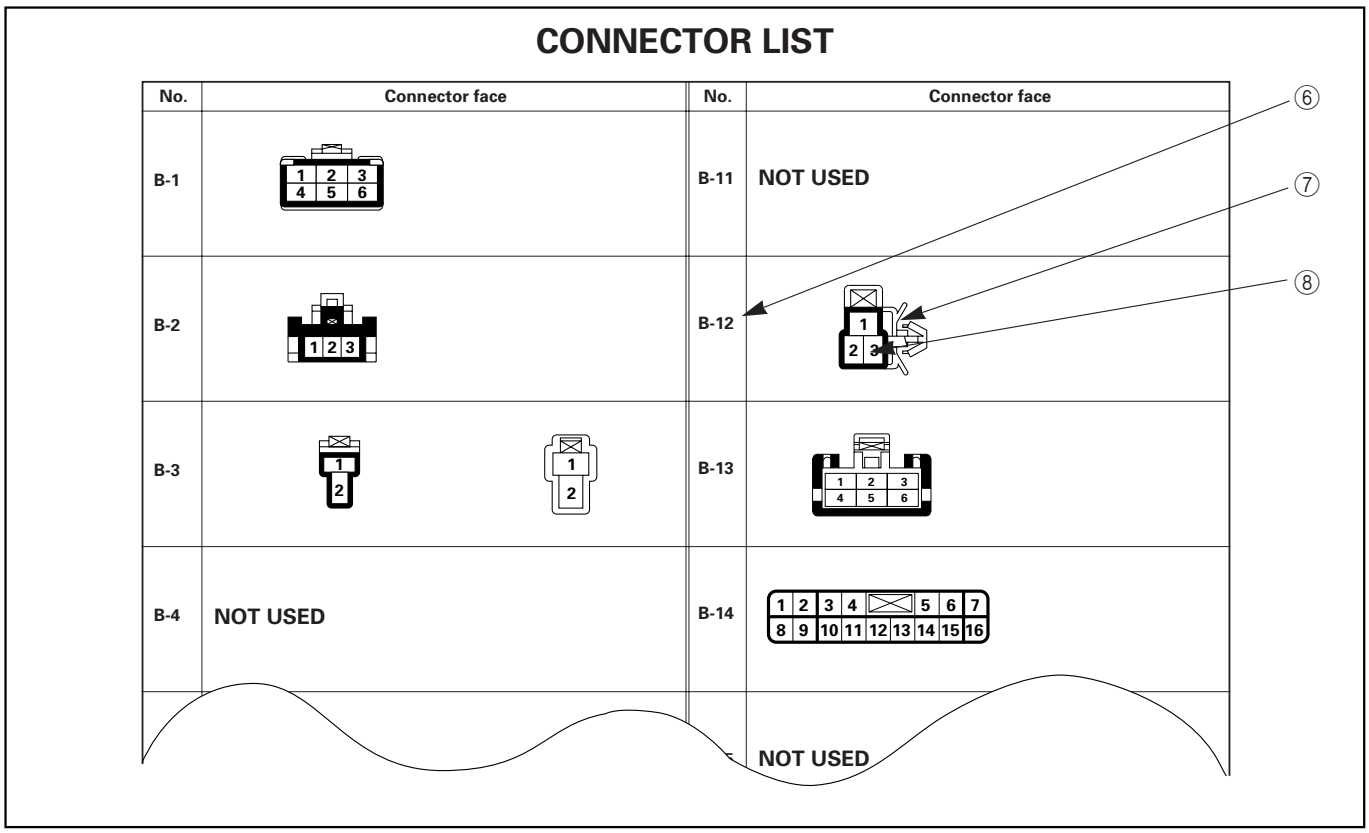

MAIN DATA AND SPECIFICATIONS

BULB SPECIFICATIONS

This illustration is based on LHD

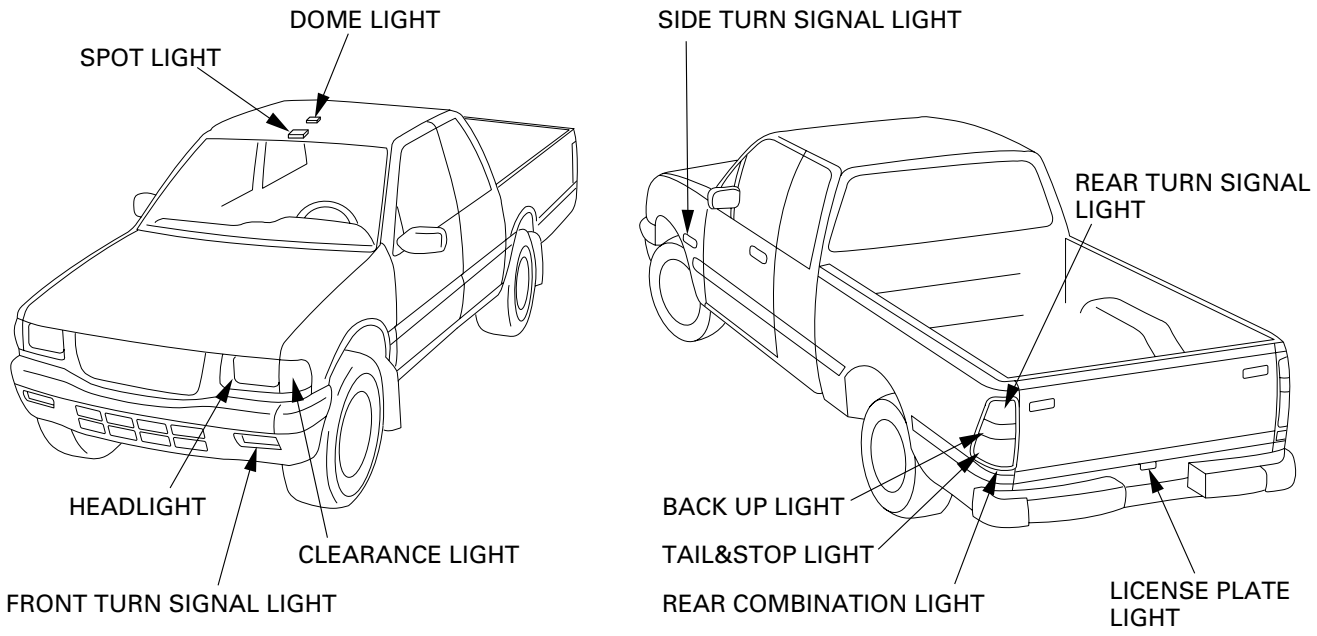

D08RV911

Light Name	Bulb No.	Rated Power V-W	Number of Bulbs	Lens Color	Remarks
Headlight	H4	12–60/55	2	White	Halogen
	R2	12–45/40	2	White	
Front turn signal light	—	12–23	2	Amber	
Side turn signal light	W5W	12–5	2	Amber	
Rear turn signal light	P21W	12-21	2	Amber	
Tail and stop light	P21/5W	12–21/5	2	Red	
Back up light	P21W	12–21	2	White	
License plate light	W5W	12–5	1 or 2	White	
Clearance light	W5W	12–5	2	White	
A/C-Heater control light	—	12–0.7	1	—	
Dome light	—	12–10	1	White	
Spot light	—	12–5	2	White	
Inspection light	—	12–5	1	White	

Light Name			Bulb No.	Rated Power V-W	Number of Bulbs	Lens Color	Remarks
Indicator/ Warning light	Charging system	Gasoline engine	—	14–3.0	1	Red	
		Diesel engine	74	14–1.4	1		
	Check engine		74	14–1.4	1	Red	Gasoline (MPI) engine
	Turn signal	W/O Tachometer	158	14–3.4	2	Green	
		W/Tachometer	74	14–1.4	2		
	High beam	W/O Tachometer	158	14–3.4	1	Blue	
		W/Tachometer	74	14–1.4	1		
	Low fuel	W/O Tachometer	—	14–3.0	1	Amber	
		W/Tachometer	74	14–1.4	1		
	Oil pressure		74	14–1.4	1	Red	
	Brake system		74	14–1.4	1	Red	
	4WD	W/O Tachometer	158	14–3.4	1	Green	
		W/Tachometer	74	14–1.4	1		
	Overdrive off		74	14–1.4	1	Amber	A/T
	Glow		74	14–1.4	1	Amber	Diesel engine
	Sedimenter		74	14–1.4	1	Red	Diesel engine
	Seat belt		—	14–2.0	1	Red	Saudi Arabia
	Oil temperature		74	14–1.4	1	Red	Gasoline engine (Saudi Arabia)
	Timing belt		74	14–1.4	1	Red	4JA1-T engine (RHD models)
	Diff. lock		74	14–1.4	1	Green	South Africa

RELAY AND FUSE BOX, FUSE BOX LOCATION LHD-1

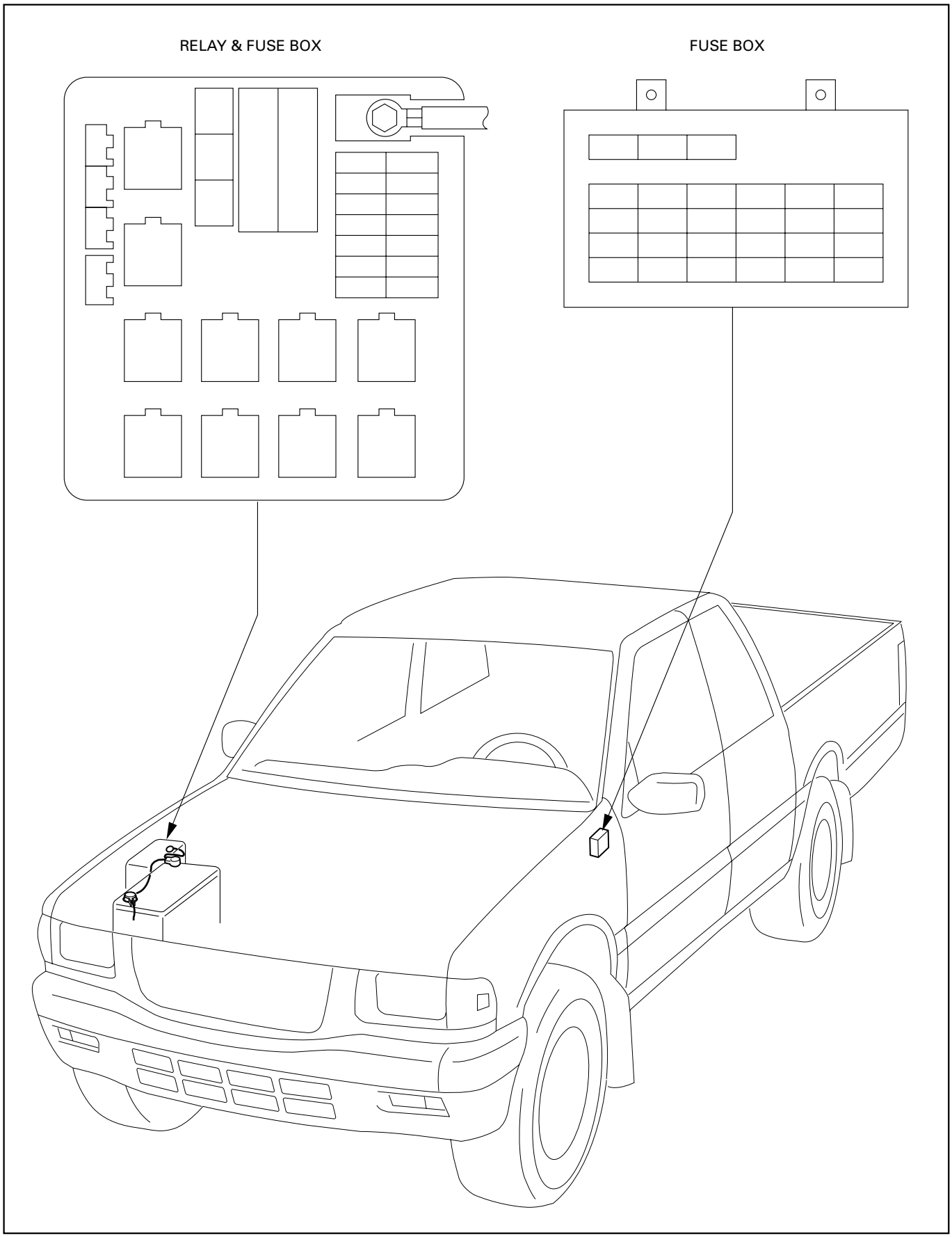

D08RV924

RELAY AND FUSE BOX, FUSE BOX LOCATION LHD-2 (6VD1)

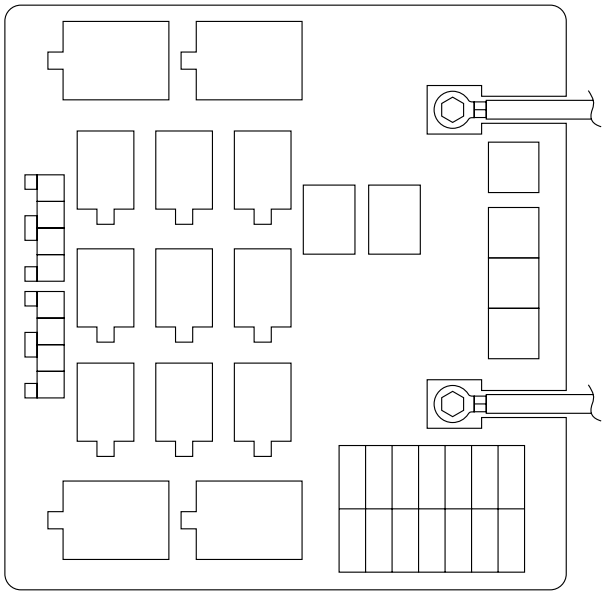

D08RW522

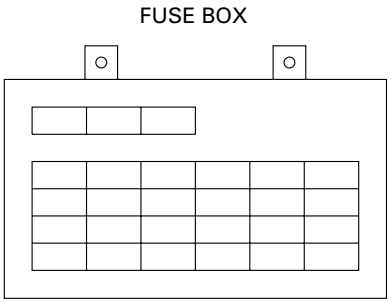

D08RW613

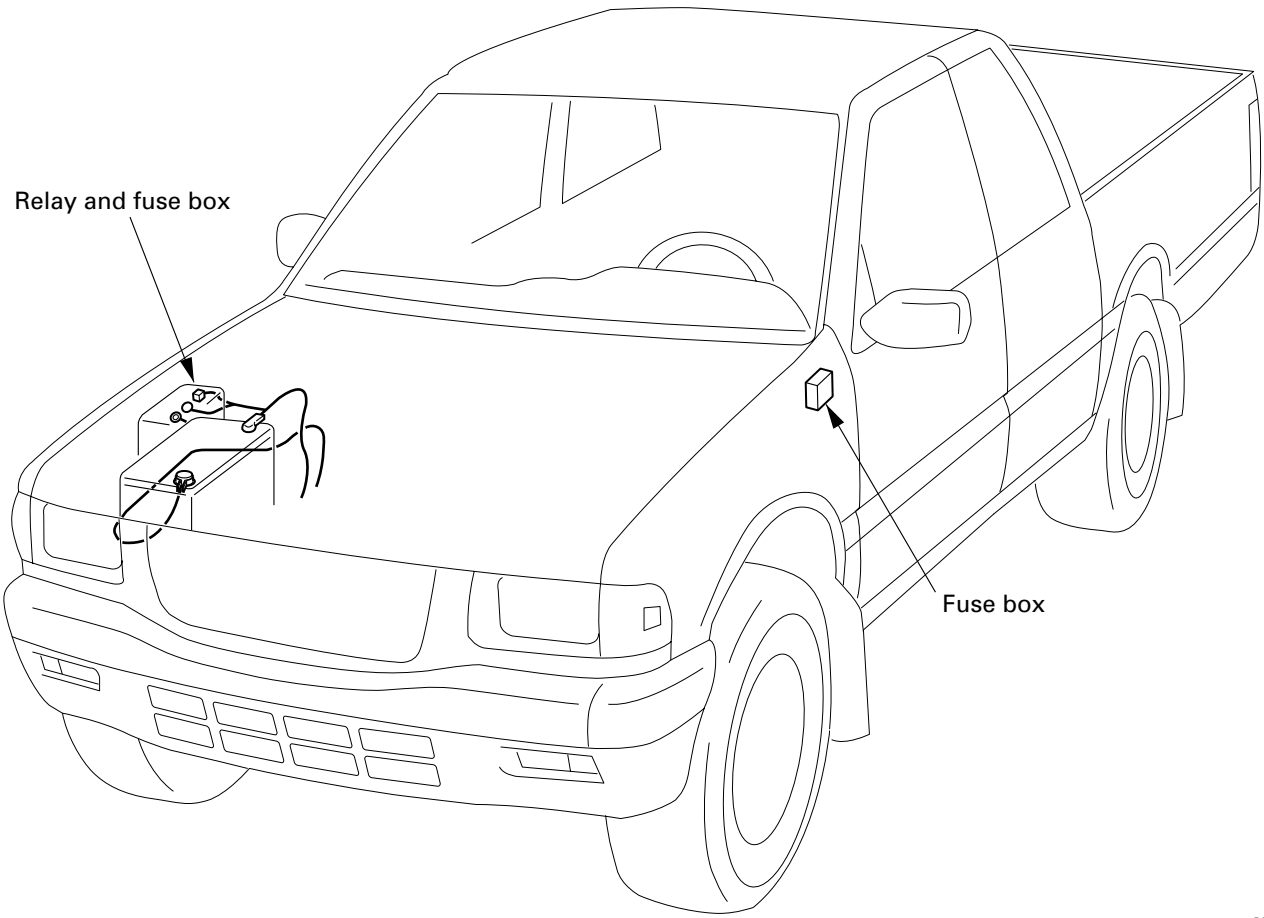

D08RW555

RHD-1

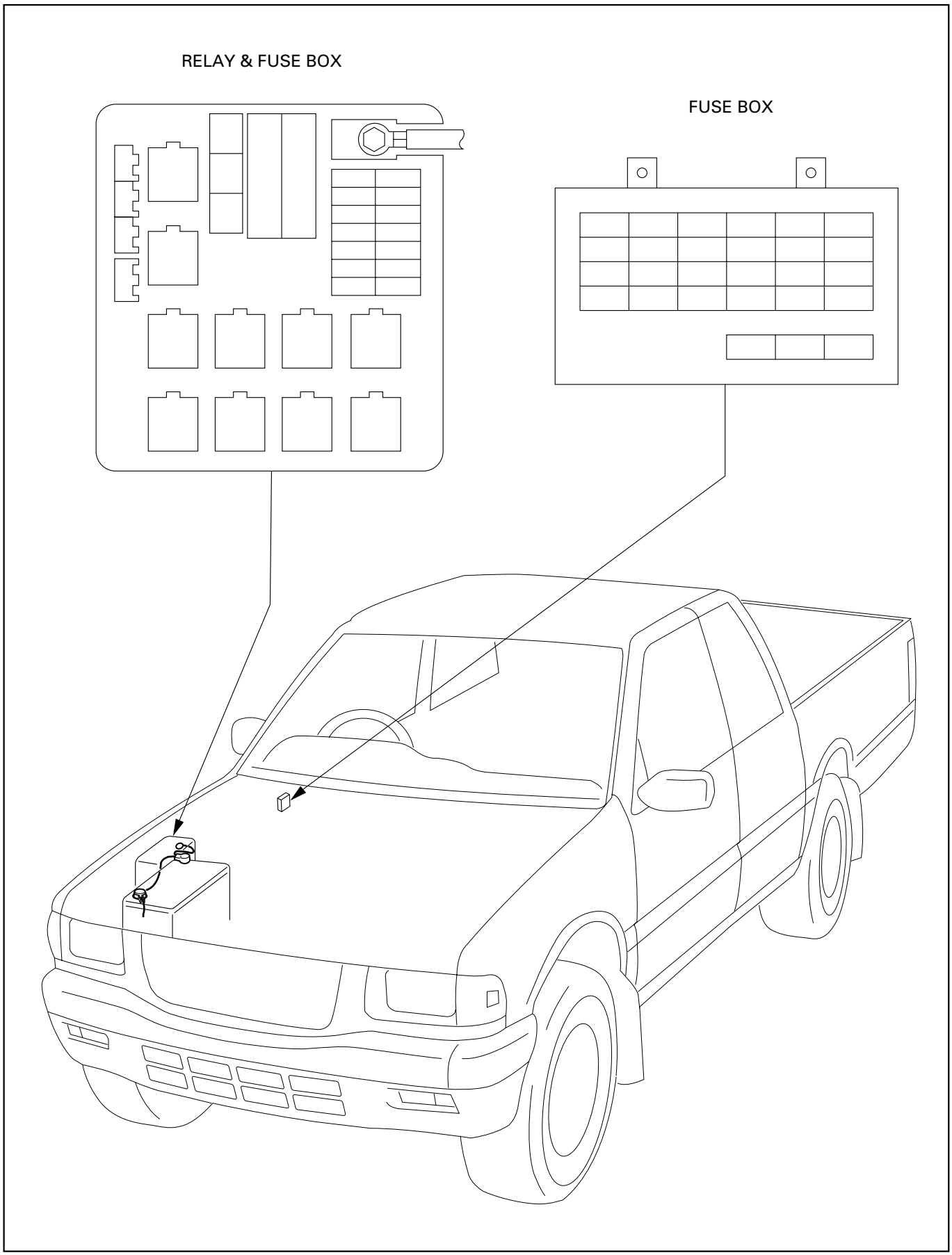

D08RV925

RHD-2 (6VD1)

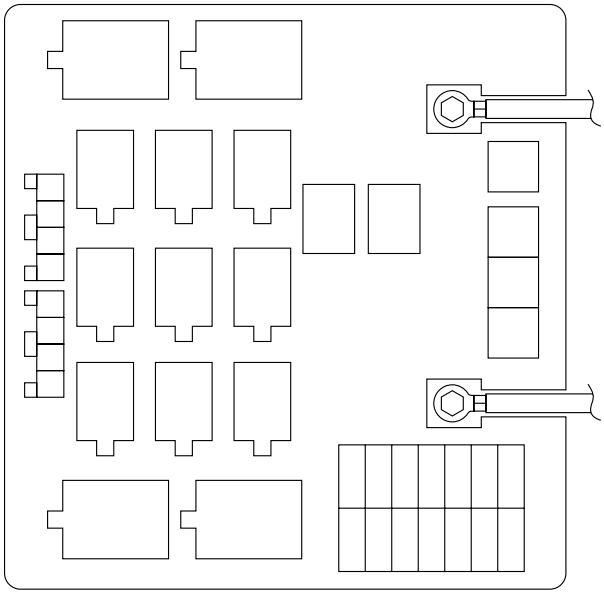

D08RW522

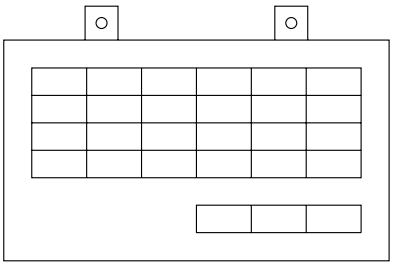

D08RW614

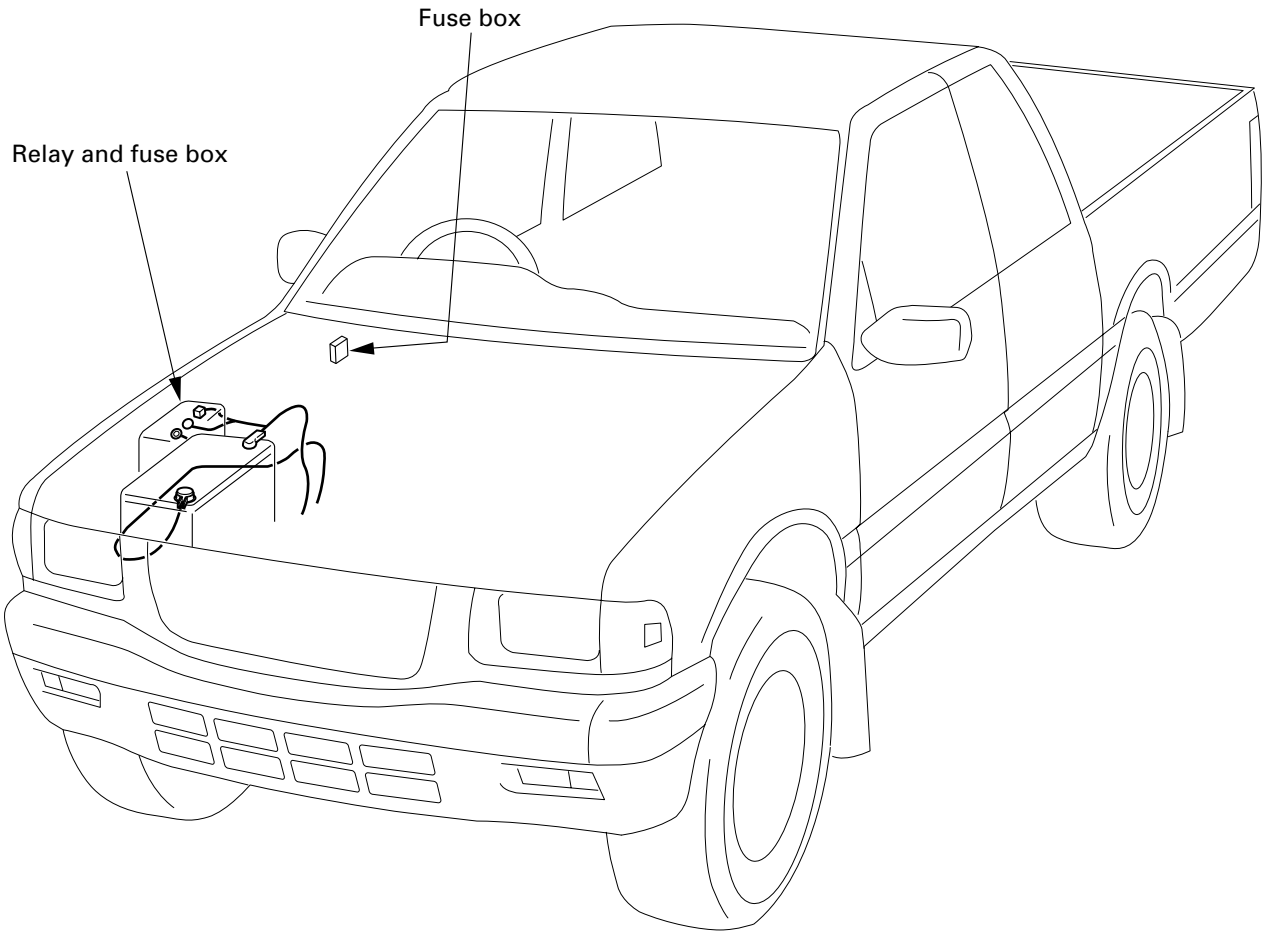

D08RW554

FUSE AND FUSIBLE LINK LOCATION-1 (RELAY AND FUSE BOX)

RELAY & FUSE BOX

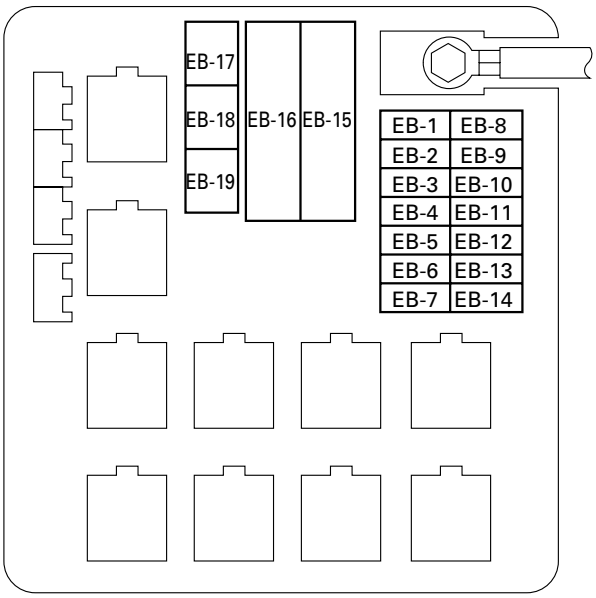

FUSE

D08RV811

Engine model / NO.	4Z Series	4ZD1 (MPI)	4ZE1 (MPI)	4J Series	4JA1 (South Africa)
EB-1	15A HAZARD	15A HAZARD	15A HAZARD	15A HAZARD	15A HAZARD
EB-2	10A HORN	10A HORN	10A HORN	10A HORN	10A HORN
EB-3	—	—	—	—	—
EB-4	20A BLOWER	20A BLOWER	20A BLOWER	20A BLOWER	20A BLOWER
EB-5	10A AIR CON.	10A AIR CON.	10A AIR CON.	10A AIR CON.	10A AIR CON.
EB-6	—	—	10A (RR FOG)	—	—
EB-7	—	10A O_2 SENSOR	10A (O_2 SENSOR)	10A (CHARGE)	—
EB-8	10A H/LAMP-LH	10A H/LAMP-LH	10A H/LAMP-LH	10A H/LAMP-LH	10A H/LAMP-LH
EB-9	10A H/LAMP-RH	10A H/LAMP-RH	10A H/LAMP-RH	10A H/LAMP-RH	10A H/LAMP-RH
EB-10	—	—	—	—	—
EB-11	10A STOP	10A STOP	10A STOP	10A STOP	10A STOP
EB-12	15A TAIL	15A TAIL	15A TAIL	15A TAIL	15A TAIL
EB-13	—	15A ECM	15A ECM	—	—
EB-14	10A AUTO CHOKE	20A FUEL PUMP	20A FUEL PUMP	—	—

FUSIBLE LINK

Engine model / NO.	4Z Series	4ZD1 (MPI)	4ZE1 (MPI)	4J Series	4JA1 (South Africa)
EB-15	40A IGN. B1	40A IGN. B1	40A IGN. B1	40A IGN. B1	40A IGN. B1
EB-16	80A MAIN	80A MAIN	100A MAIN	100A MAIN	80A MAIN
EB-17	—	—	—	50A GLOW	50A GLOW
EB-18	30A (EFE)	—	30A(H/LAMP WASHER)	—	—
EB-19	40A IGN. B2, POWER	40A IGN. B2, POWER	40A IGN. B2, POWER	40A IGN. B2, POWER	40A IGN. B2, POWER

FUSE AND FUSIBLE LINK LOCATION-2 (RELAY AND FUSE BOX)

RELAY & FUSE BOX

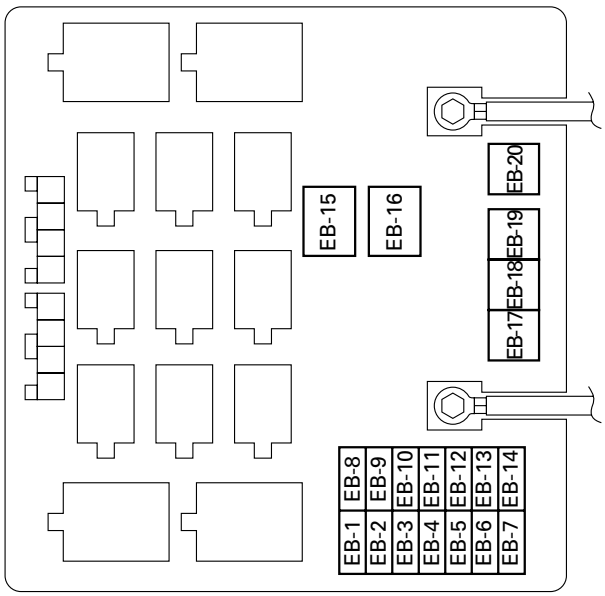

D08RW523

FUSE

Engine model / NO.	6VD1				
EB-1	15A HAZARD				
EB-2	10A HORN				
EB-3	20A BLOWER				
EB-4	10A A/C				
EB-5	—				
EB-6	15A FUEL PUMP				
EB-7	10A O_2 SENSOR				
EB-8	10A H/LAMP-LH				
EB-9	10A H/LAMP-RH				
EB-10	10A STOP LAMP				
EB-11	10A TAIL				
EB-12	10A TCM				
EB-13	10A ECM				
EB-14	20A ECM				

FUSIBLE LINK

Engine model / NO.	6VD1				
EB-15	40A IGN. B1				
EB-16	100A MAIN				
EB-17	40A IGN. B2				
EB-18	30A RR DEF				
EB-19	30A COND FAN				

FUSE AND CIRCUIT BREAKER LOCATION (FUSE BOX) LHD

FUSE BOX

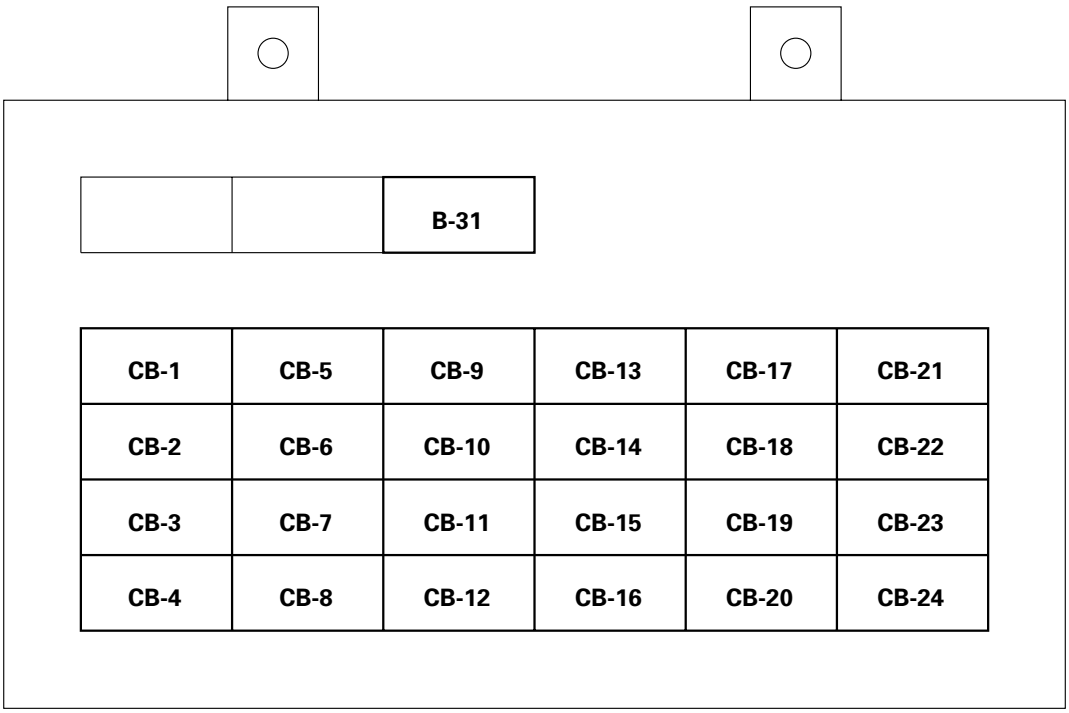

D08RV926

FUSE

No.	Capacity	Indication on label	No.	Capacity	Indication on label
CB-1	10A	STARTER	CB-13	15A	(RR DEFOG.)
CB-2	—	—	CB-14	10A	DOME LIGHT
CB-3	15A	ENGINE-1	CB-15	20A	(DOOR LOCK)
CB-4	10A	ENGINE-2	CB-16	—	—
CB-5	—	—	CB-17	—	—
CB-6	—	—	CB-18	—	—
CB-7	15A	METER	CB-19	15A	AUDIO
CB-8	20A	FRONT WIPER	CB-20	15A	CIGAR
CB-9	—	—	CB-21	—	—
CB-10	—	—	CB-22	—	—
CB-11	15A	BACK UP, TURN	CB-23	—	—
CB-12	10A	(SEAT HEATER)	CB-24	—	—

CIRCUIT BREAKER

No.	Capacity	Indication on label
B-31	30A	(POWER WINDOW)

RHD

FUSE BOX

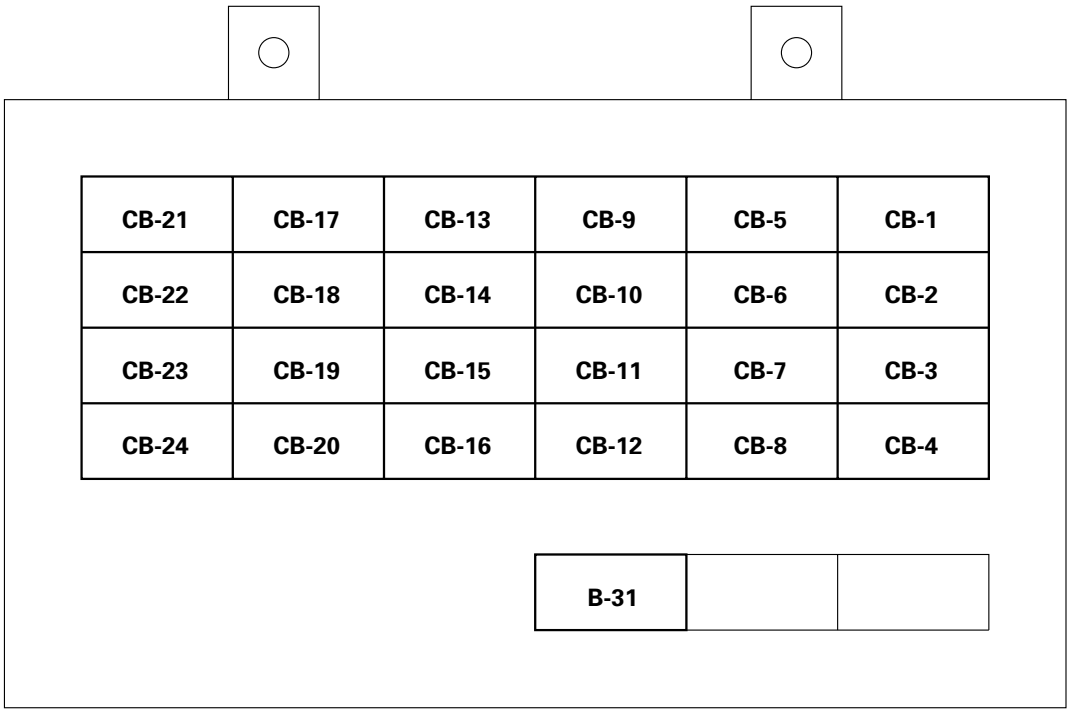

D08RV927

FUSE

No.	Capacity	Indication on label	No.	Capacity	Indication on label
CB-1	10A	STARTER	CB-13	15A	(RR DEFOG.)
CB-2	—	—	CB-14	10A	DOME LIGHT
CB-3	15A	ENGINE-1	CB-15	20A	(DOOR LOCK)
CB-4	10A	ENGINE-2	CB-16	—	—
CB-5	15A	METER	CB-17	—	—
CB-6	20A	FRONT WIPER	CB-18	—	—
CB-7	—	—	CB-19	15A	AUDIO
CB-8	—	—	CB-20	15A	CIGAR
CB-9	—	—	CB-21	—	—
CB-10	—	—	CB-22	—	—
CB-11	15A	BACK UP, TURN	CB-23	—	—
CB-12	—	—	CB-24	—	—

CIRCUIT BREAKER

No.	Capacity	Indication on label
B-31	30A	(POWER WINDOW)

RELAY LOCATION-1 (RELAY AND FUSE BOX)

RELAY & FUSE BOX

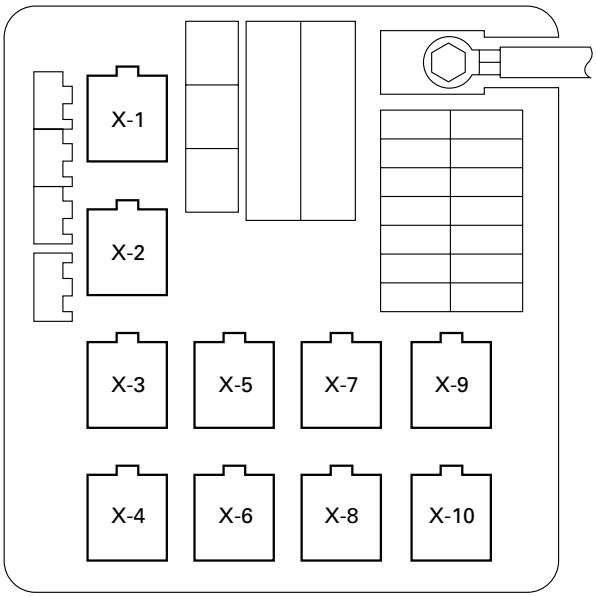

D08RV807

RELAY

Engine model / NO.	4Z Series	4ZD1 (MPI)	4ZE1 (MPI)	4J Series	4JA1 (South Africa)
X-1	RELAY; LIGHTING	RELAY; LIGHTING	RELAY; LIGHTING	RELAY; LIGHTING	RELAY; LIGHTING
X-2	RELAY; TAIL	RELAY; TAIL	RELAY; TAIL	RELAY; TAIL	RELAY; TAIL
X-3	RELAY; HEATER	RELAY; HEATER	RELAY; HEATER	RELAY; HEATER	RELAY; HEATER
X-4	RELAY; HORN	RELAY; HORN	RELAY; HORN	RELAY; HORN	RELAY; HORN
X-5	RELAY; CHARGE	RELAY; CHARGE	(RELAY; OD OFF)	RELAY; CHARGE	—
X-6	RELAY; STARTER	RELAY; STARTER	RELAY; STARTER	—	RELAY; STARTER
X-7	(RELAY; THERMO)	(RELAY; THERMO)	(RELAY; THERMO)	(RELAY; THERMO)	(RELAY; THERMO)
X-8	—	—	RELAY; ST. CUT	—	RELAY; ST. CUT
X-9	—	RELAY; FUEL PUMP	RELAY; FUEL PUMP	(RELAY; CSD)	(RELAY; CSD)
X-10	(RELAY; EFE HEATER)	RELAY; ECM MAIN	RELAY; ECM MAIN	—	—

RELAY LOCATION-2 (RELAY AND FUSE BOX - 6VD1)

RELAY & FUSE BOX

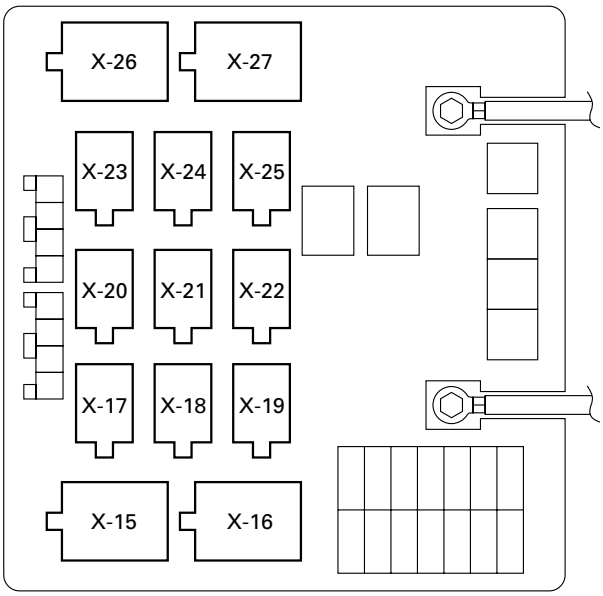

D08RW524

RELAY

Engine model / NO.	6VD1				
X-15	RELAY; HEATER				
X-16	RELAY; A/C COMP				
X-17	RELAY; HORN				
X-18	RELAY; ECM MAIN				
X-19	—				
X-20	RELAY; TAIL				
X-21	—				
X-22	RELAY; THERMO				
X-23	RELAY; HEAD LAMP				
X-24	RELAY; STARTER				
X-25	RELAY; COND FAN				
X-26	RELAY; FUEL PUMP				
X-27	—				

RELAY LOCATION-3

(LHD)

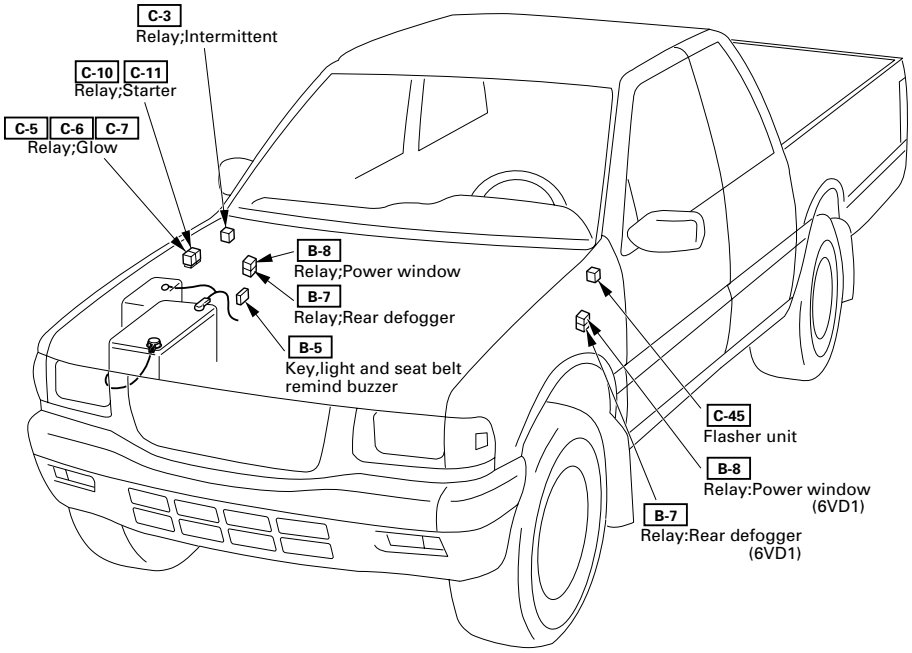

D08RW552

(RHD)

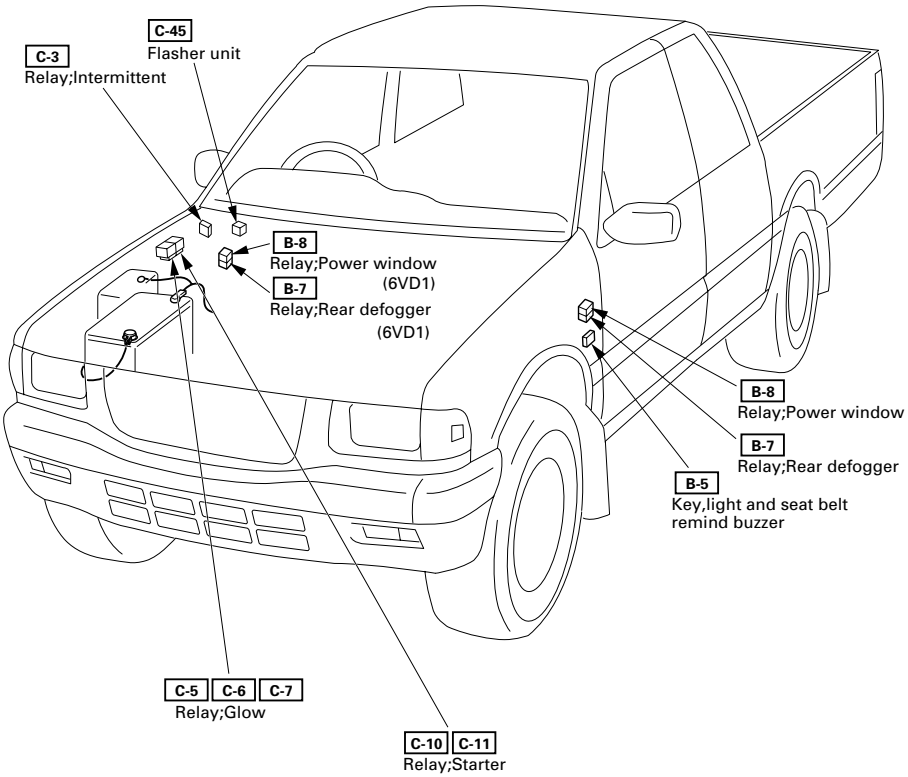

D08RW553

RELAY

Connector No.	C-3	C-5	C-6	C-7	C-10	C-11	B-7	B-8
Relay / Engine model	WINDSHIELD INTERMITTENT	GLOW			STARTER		RR DEFOGGER	POWER WINDOW
4Z Series	○	—			—		○	○
4J Series	○	○			○		○	○
6VD1	○	—			—		○	○

DIODE LOCATION-1

RELAY & FUSE BOX

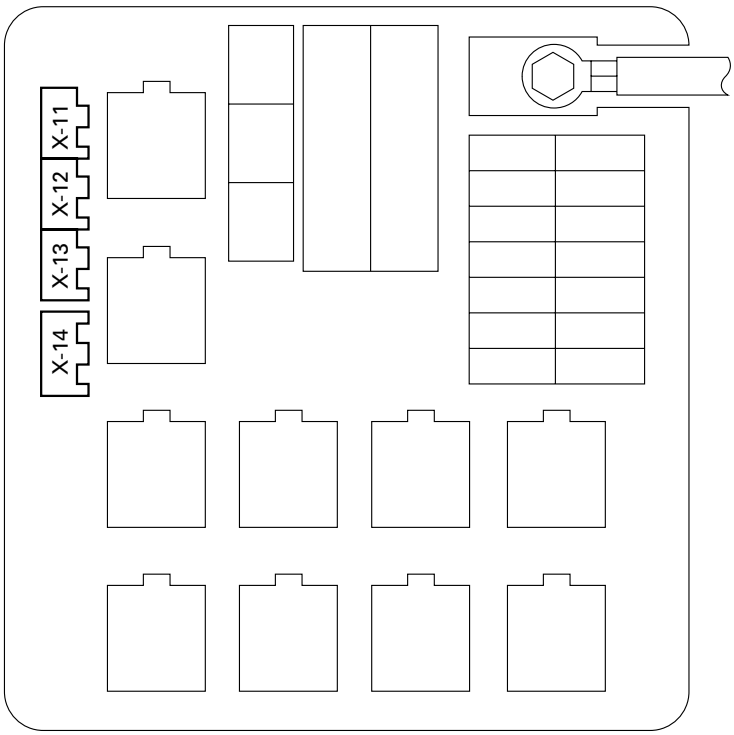

D08RV812

FUSE BOX (LHD)

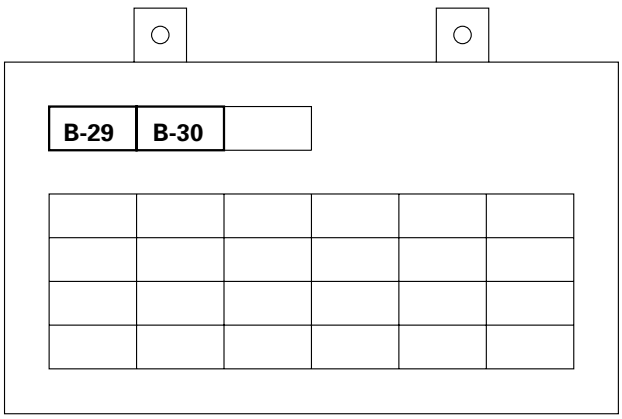

D08RV928

FUSE BOX (RHD)

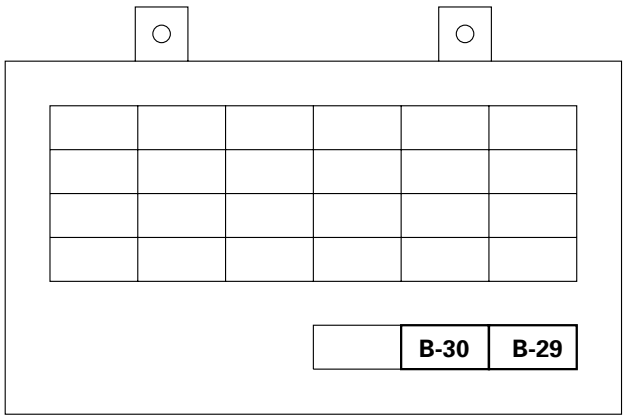

D08RV929

DIODE

Connector No.	X-11	X-12	X-13	X-14	B-29	B-30
Usage / Engine model	RELAY; ECM MAIN	RELAY; A/C THERMO	—	FUEL PUMP	—	DOME LIGHT
4Z Series	○	—	—	○	—	○
4J Series	—	○	—	—	—	○

DIODE LOCATION-2 (6VD1)

RELAY & FUSE BOX

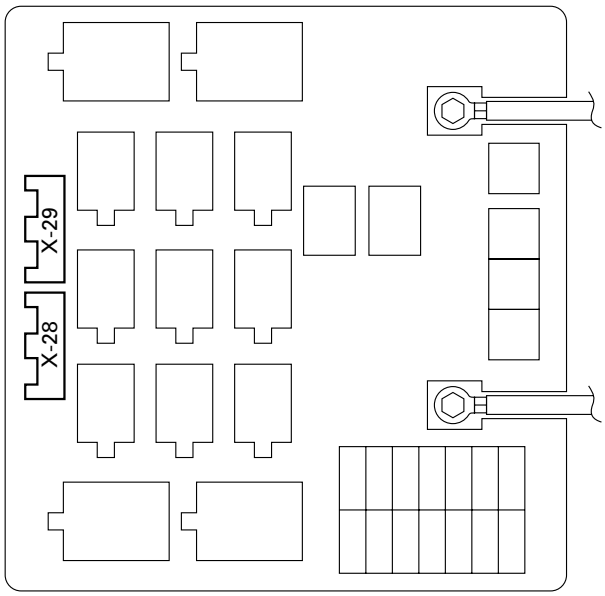

D08RW525

FUSE BOX (LHD)

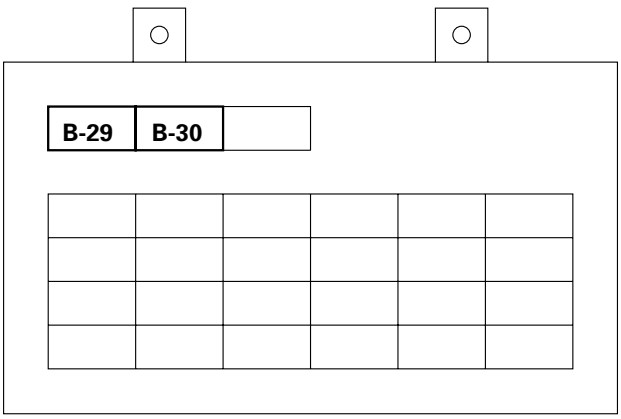

D08RV928

FUSE BOX (RHD)

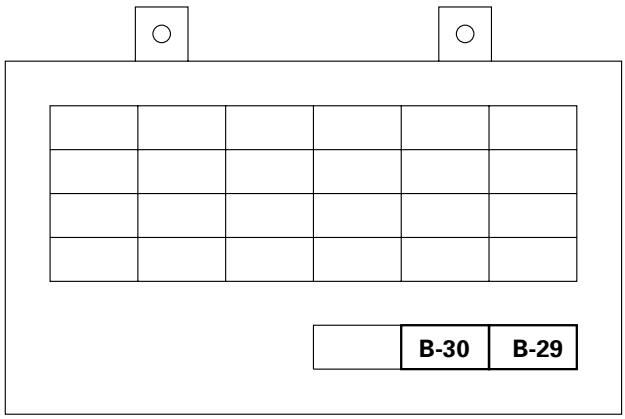

D08RV929

DIODE

Connector No.	X-28	X-29				
Usage / Engine model						
6VD1	○	—				
4J Series	—	—				

FUSE BLOCK CIRCUIT
GASOLINE ENGINE EXCEPT 4ZE1 (MPI) ENGINE

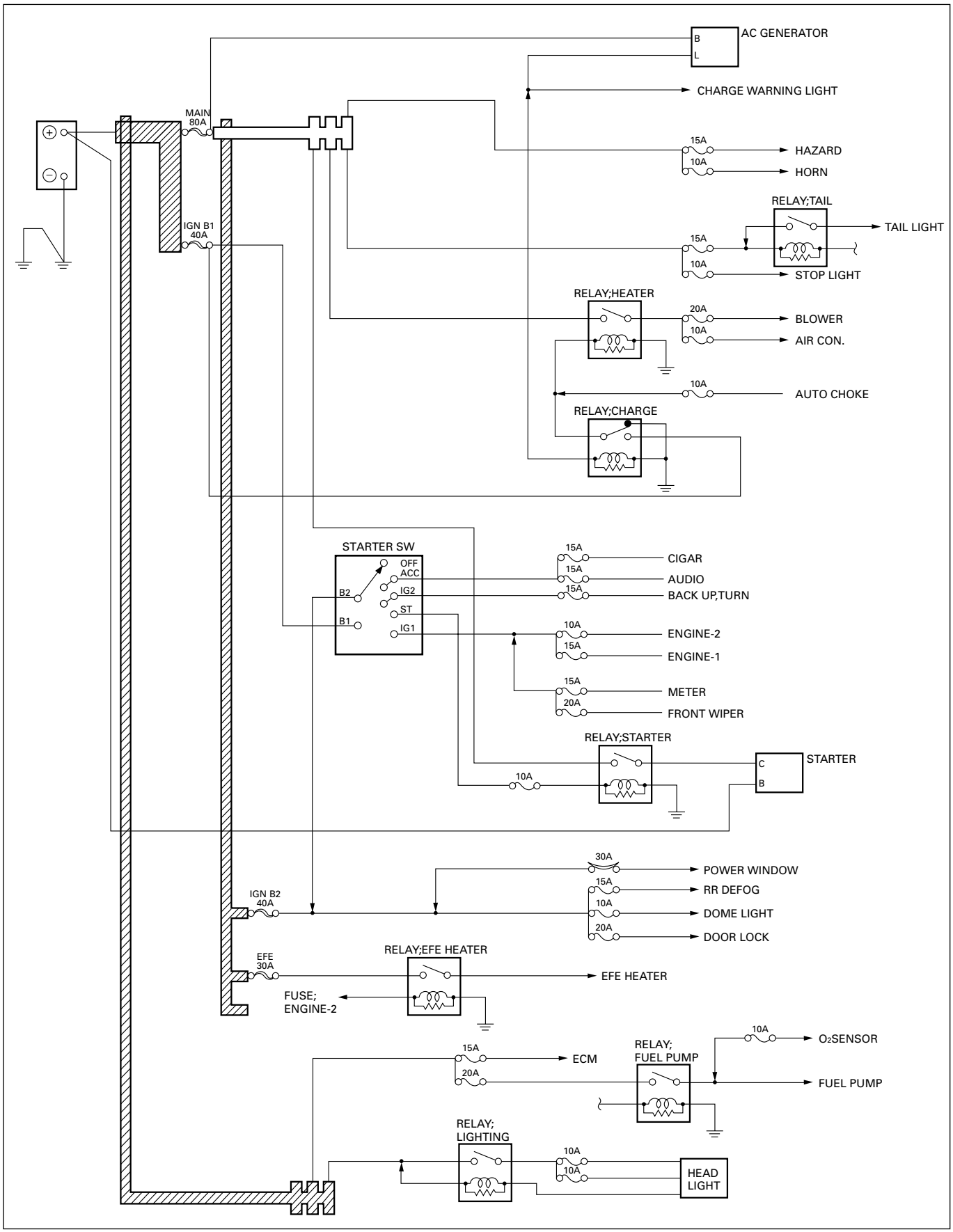

D08RVA12

4ZE1 (MPI) ENGINE

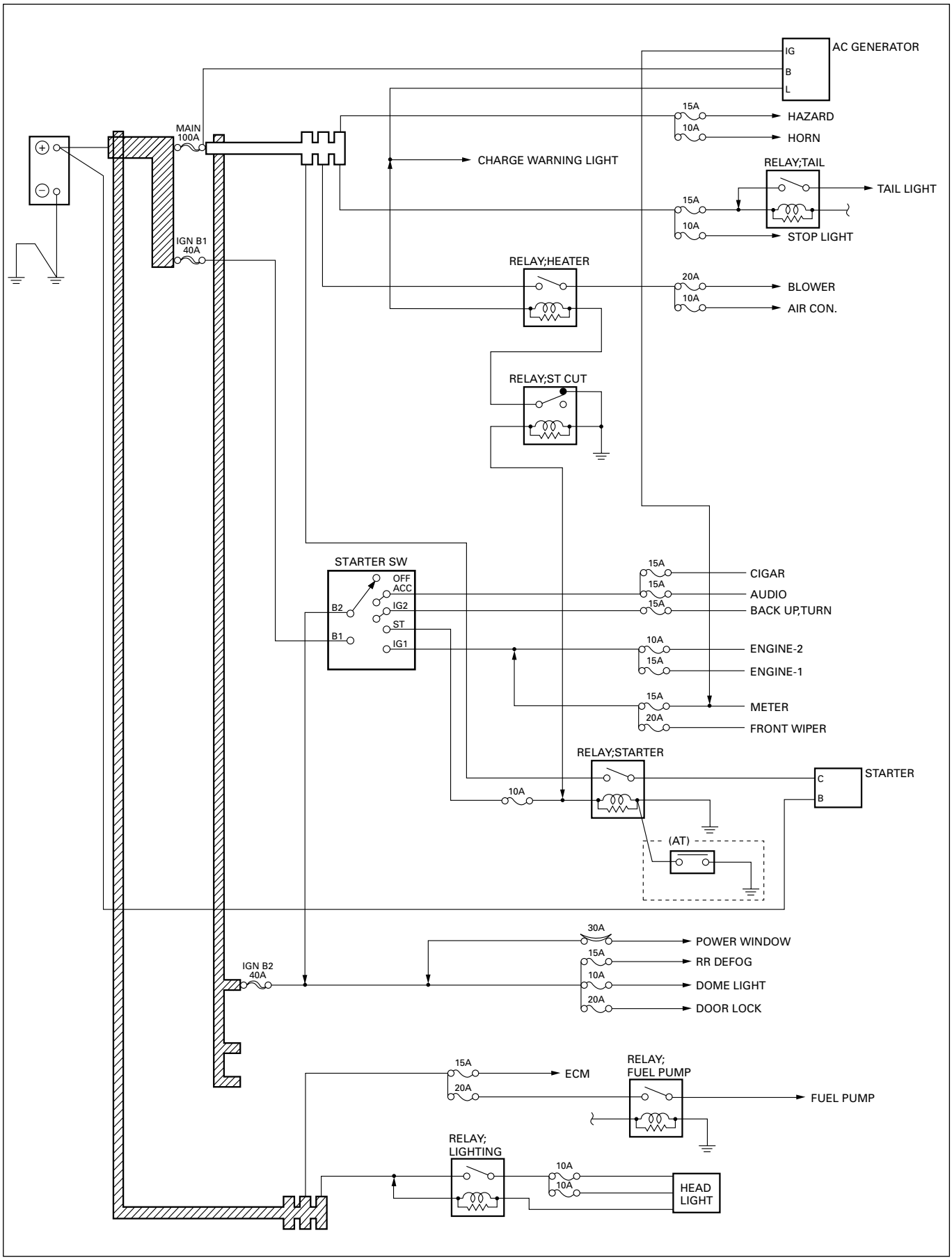

D08RVA13

6VD1 (ECM) ENGINE

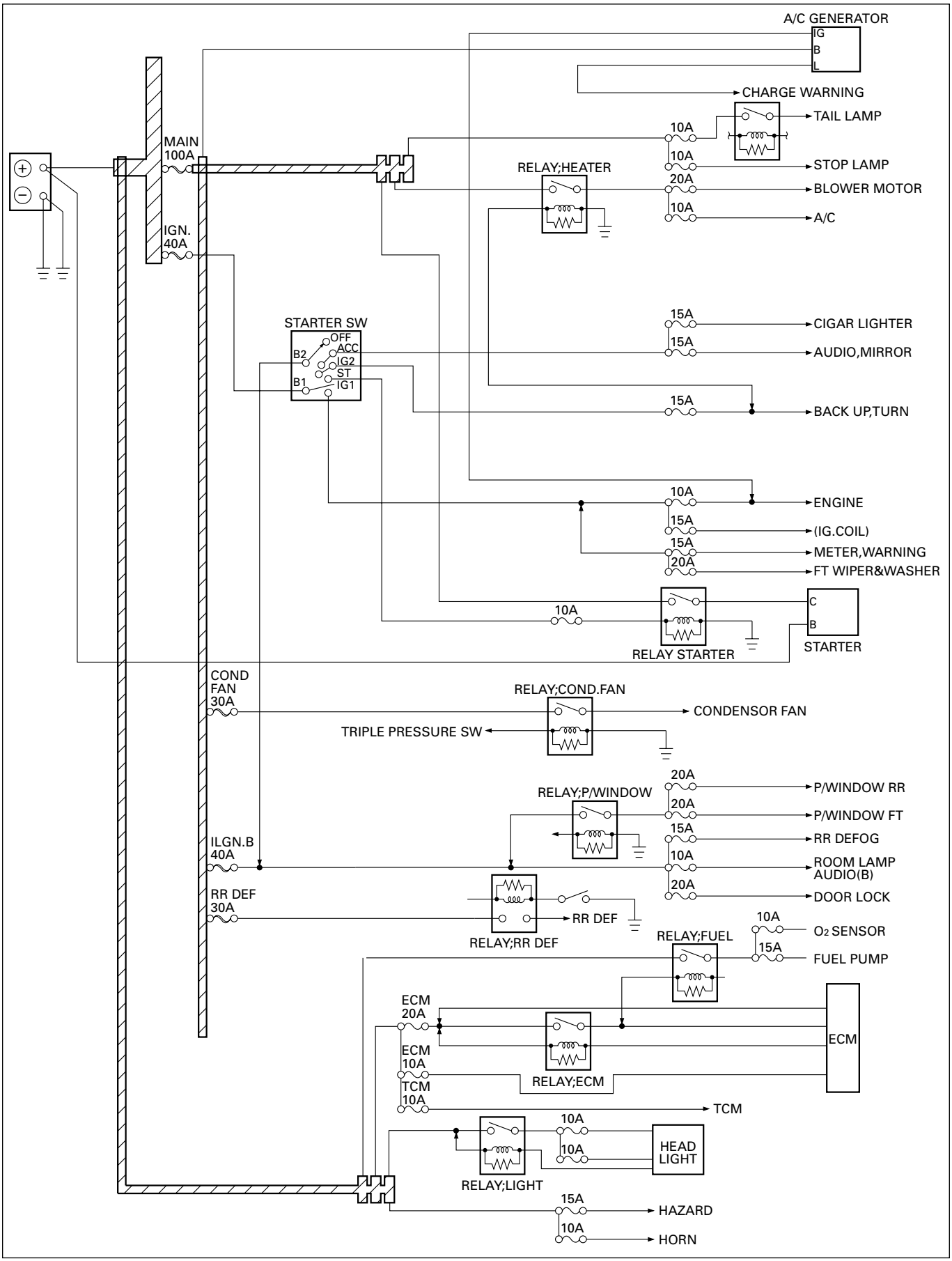

D08RW526

DIESEL ENGINE

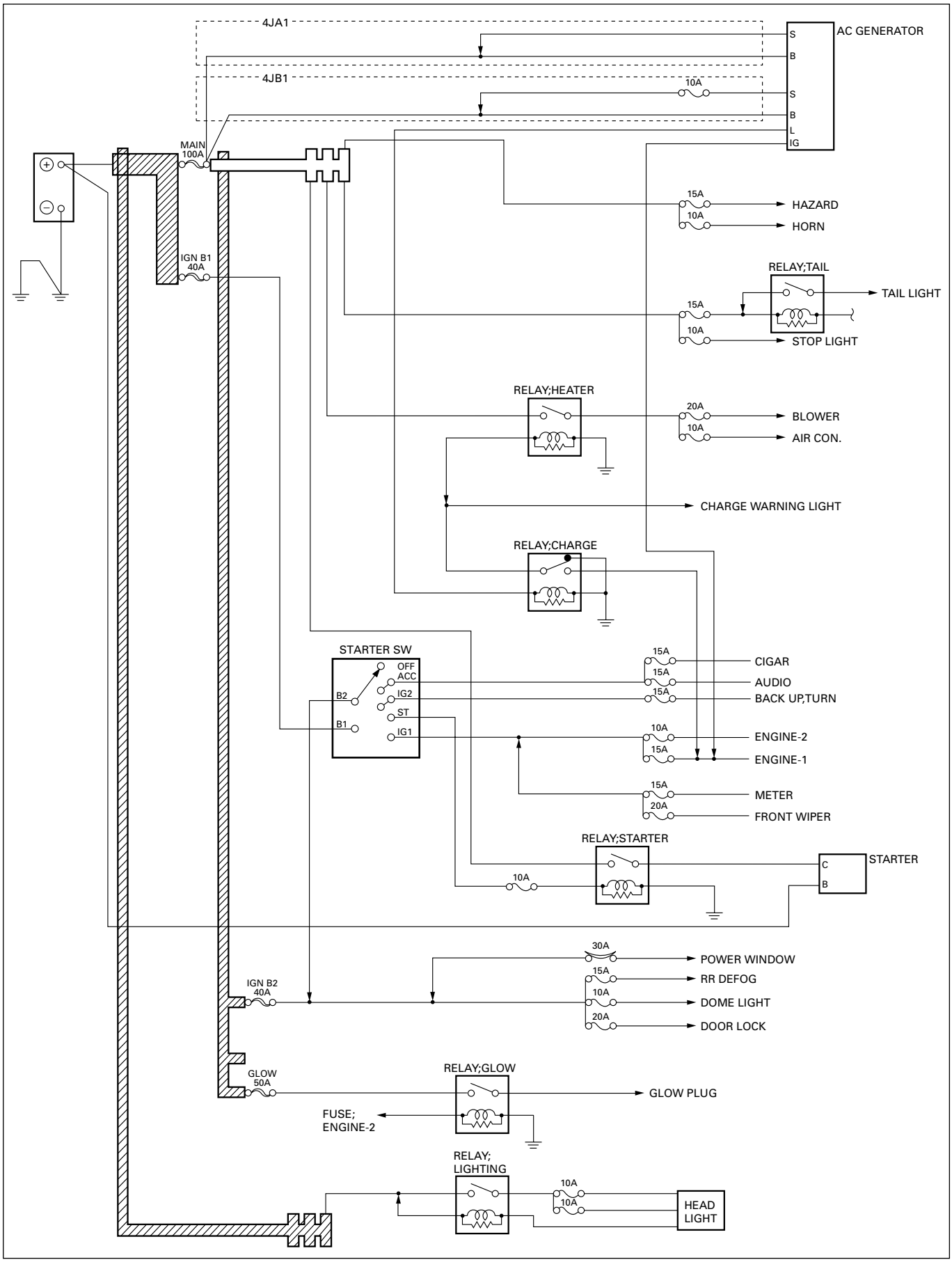

D08RVA14

REFERENCE TABLE OF FUSE, FUSIBLE LINK AND CIRCUIT BREAKER GASOLINE ENGINE

FUSE
(Relay and fuse box)

Fuse No.	Capacity	Indication on lable	Parts (Load)
EB-1	15A	HAZARD	Hazard SW, Flasher unit
EB-2	10A	HORN	Horn relay, Horn SW, Horn
EB-3	20A	BLOWER (6VD1)	Blower motor, Blower resistor
EB-4	20A	BLOWER	Blower motor, A/C thermo relay, Blower resistor
	10A	AIR CON (6VD1)	A/C thermo relay, A/C comp relay, Condenser fan relay Pressure SW, Electronic thermo, Magnet clutch A/C SW, Triple pressure SW, Fan SW
EB-5	10A	AIR CON	Pressure SW, A/C SW, Electronic thermostat, Fan SW, Magnetic clutch, FICD, A/C thermo relay
EB-6	15A	FUEL PUMP (6VD1)	Fuel pump
EB-7	10A	O_2 SENSOR	Oxygen sensor (4ZD1 (MPI))
EB-8	10A	H/LAMP-LH	Headlight-LH, High beam indicator light , Dimmer · passing SW
EB-9	10A	H/LAMP-RH	Headlight-RH, Dimmer · passing SW
EB-10	10A	STOP (6VD1)	Stop light SW, Stop light, High mounted stop light
EB-11	10A	STOP	Stop light SW, Stop light, High mounted stop light
	10A	TAIL (6VD1)	Tail relay, Clearance light, Tail light, License plate light, Illumination controller, Illumination light, Lighting SW
EB-12	15A	TAIL	Tail relay, Clearance light, Tail light, License plate light, Illumination controller, Illumination lights, Lighting SW
	10A	TCM (6VD1)	TCM
EB-13	15A	ECM	ECM main relay, ECM, Crank angle sensor, Throttle valve SW, VSV; canister (4ZD1 (MPI)), Fuel injector, VSV; pressure regulator
	10A	ECM (6VD1)	ECM Back Up
EB-14	10A	AUTO CHOKE	Auto choke (4ZD1 (CARB)), Vent SW valve (4ZD1 (CARB))
	20A	FUEL PUMP	Fuel pump relay (4ZD1 (MPI), 4ZE1 (MPI)), Fuel pump (4ZD1 (MPI), 4ZE1 (MPI)), Air regulator (4ZD1 (MPI), 4ZE1 (MPI))
	20A	ECM (6VD1)	ECM main relay, Fuel pump relay, ECM, Fuel injector, Idle air control valve

FUSE
(Fuse box)

Fuse No.	Capacity		Indication on lable	Parts (Load)
CB-1	10A		STARTER	Starter relay, ST. cut relay (4ZE1 (MPI)), ECM
CB-2	—		—	—
CB-3	15A		ENGINE-1	Ignition coil, Power SW, Distributor, Engine speed sensor
CB-4	10A		ENGINE-2	ECM main relay, Engine speed sensor, Slow cut solenoid (4ZD1 (CRAB), 4ZE1 (CARB)), Neutral SW (4ZC1 (CARB), 4ZD1 (CARB)), Coasting richer (4ZC1 (CARB), 4ZD1 (CARB)), 2ND SW (4ZD1 (CARB)), TOP-3RD SW (4ZD1 (CARB)), VSV; Air (4ZD1 (CARB)), Clutch SW (4ZD1 (CARB)), Accel SW (4ZD1 (CARB)) Canister duty solenoid valve (6VD1)
CB-5	15A	RHD	METER	Vehicle speed sensor, Meter gauges, Indicator and warning lights, Overdrive off relay (A/T), Overdrive solenoid (A/T), Overdrive off SW (A/T), Key, light & seat belt remind buzzer (SOUTH AFRICA), RR defogger relay, RR defogger SW, AC generator, Seat belt SW (SOUTH AFRICA) Indicator and warning lights, Power drive and check trans (6VD1 A/T)
CB-6	20A	RHD	FRONT WIPER	Windshield wiper & washer SW, Windshield wiper motor, Windshield washer motor, Windshield intermittent relay
CB-7	15A	LHD	METER	Vehicle speed sensor, Meter gauges, Indicator and warning lights, Engine speed sensor (4ZD1 (CARB)), RR defogger relay, RR defogger SW, Key, light & seat belt remind buzzer (SAUDI ARABIA), Seat belt SW (SAUDI ARABIA)
CB-8	20A	LHD	FRONT WIPER	Windshield wiper & washer SW, Windshield wiper motor, Windshield washer motor, Windshield intermittent relay
CB-9	—		—	—
CB-10	—		—	—
CB-11	15A		BACK UP, TURN	Power window relay, FRT power window & door lock SW-driver side, RR power window SW, Radiator level warning buzzer (4ZD1, LHD), Radiator level control unit (4ZD1, LHD), Hazard SW, Flasher unit, Turn signal SW, Back up light SW (M/T), Back up light, Mode SW (A/T)
CB-12	10A	LHD	(SEAT HEATER)	—

Fuse No.	Capacity	Indication on lable	Parts (Load)
CB-13	15A	(RR DEFOG.)	RR defogger relay, RR defogger SW, RR defogger
CB-14	10A	DOME LIGHT	Dome light, Spot light, Door SW, Audio, Clock
CB-15	20A	(DOOR LOCK)	FRT power window & door lock SW-driver side, Door lock SW-driver side, Door lock actuator
CB-16	—	—	—
CB-17	—	—	—
CB-18	—	—	—
CB-19	15A	AUDIO	Door mirror control SW, Mirror, Audio
CB-20	15A	CIGAR	Cigarette lighter, Clock
CB-21	—	—	—
CB-22	—	—	—
CB-23	—	—	—
CB-24	—	—	—

FUSIBLE LINK
(Relay and fuse box)

Fusible link No.	Capacity	Indication on label	Remarks
EB-15	40A	IGN. B1	
EB-16	80A	MAIN	Except 4ZE1 (MPI)
	100A	MAIN	4ZE1 (MPI), 6VD1 (ECM)
EB-17	40A	IGN. B2	6VD1 (ECM)
EB-18	30A	(EFE)	
	30A	RR DEF	6VD1
EB-19	40A	IGN. B2, POWER	
	30A	CONDENSER FAN	6VD1

CIRCUIT BREAKER
(Fuse box)

Circuit breaker No.	Capacity	Indication on label	Parts (Load)
B-31	30A	(POWER WINDOW)	Power window & door lock SW, Power window motor, Power window relay

DIESEL ENGINE

FUSE
(Relay and fuse box)

Fuse No.	Capacity	Indication on lable	Parts (Load)
EB-1	15A	HAZARD	Hazard SW, Flasher unit
EB-2	10A	HORN	Horn relay, Horn SW, Horn
EB-3	—	—	—
EB-4	20A	BLOWER	Blower motor, A/C thermo relay, Blower resistor
EB-5	10A	AIR CON.	Pressure SW, A/C SW, Electronic thermostat, Fan SW, Magnetic clutch, VSV; FICD, A/C thermo relay
EB-6	—	—	—
EB-7	10A	(CHARGE)	AC generator, Charge relay
EB-8	10A	H/LAMP-LH	Headlight-LH, High beam indicator light , Dimmer · passing SW
EB-9	10A	H/LAMP-RH	Headlight-RH, Dimmer · passing SW
EB-10	—	—	—
EB-11	10A	STOP	Stop light SW, Stop light, High mounted stop light
EB-12	15A	TAIL	Tail relay, Clearance light, Tail light, License plate light, Illumination lights, Lighting SW, Illumination controller
EB-13	—	—	—
EB-14	—	—	—

FUSE
(Fuse box)

Fuse No.	Capacity		Indication on lable	Parts (Load)
CB-1	10A		STARTER	QOS-II control unit, Starter relay, ST. cut relay (4JA1 -SOUTH AFRICA)
CB-2	—		—	—
CB-3	15A		ENGINE-1	CSD relay, Fuel cut solenoid, Thermo SW, CSD solenoid, AC generator, Charge relay
CB-4	10A		ENGINE-2	QOS-II control unit, Glow relay
CB-5	15A	RHD	METER	Vehicle speed sensor, Meter gauges, Indicator and warning lights, QOS-II control unit, RR defogger relay, RR defogger SW, Key, light & seat belt remind buzzer (SOUTH AFRICA), Seat belt SW (SOUTH AFRICA)
CB-6	20A	RHD	FRONT WIPER	Windshield wiper & washer SW, Windshield wiper motor, Windshield washer motor, Windshield intermittent relay
CB-7	15A	LHD	METER	Vehicle speed sensor, Meter gauges, Indicator and warning lights, QOS-II control unit, RR defogger relay, RR defogger SW, Key, light & seat belt remind buzzer (SAUDI ARABIA), Seat belt SW (SAUDI ARABIA)
CB-8	20A	LHD	FRONT WIPER	Windshield wiper & washer SW, Windshield wiper motor, Windshield washer motor, Windshield intermittent relay
CB-9	—		—	—
CB-10	—		—	—
CB-11	15A		BACK UP, TURN	Power window relay, FRT power window & door lock SW-driver side, RR power window SW, Hazard SW, Flasher unit, Turn signal SW, Back up light SW, Back up light
CB-12	10A	LHD	(SEAT HEATER)	—
CB-13	15A		(RR DEFOG.)	RR defogger relay, RR defogger SW, RR defogger
CB-14	10A		DOME LIGHT	Dome light, Spot light, Door SW, Audio, Clock
CB-15	20A		(DOOR LOCK)	FRT power window & door lock SW-driver side, Door lock SW-driver side, Door lock actuator
CB-16	—		—	—
CB-17	—		—	—
CB-18	—		—	—
CB-19	15A		AUDIO	Door mirror control SW, Mirror, Audio

Fuse No.	Capacity	Indication on lable	Parts (Load)
CB-20	15A	CIGAR	Cigarette lighter, Clock
CB-21	—	—	—
CB-22	—	—	—
CB-23	—	—	—
CB-24	—	—	—

FUSIBLE LINK
(Relay and fuse box)

Fusible link No.	Capacity	Indication on label	Remarks
EB-15	40A	IGN. B1	
EB-16	80A	MAIN	4JA1 (SOUTH AFRICA)
	100A	MAIN	Except 4JA1 (SOUTH AFRICA)
EB-17	50A	GLOW	
EB-18	—	—	
EB-19	40A	IGN. B2, POWER	

CIRCUIT BREAKER
(Fuse box)

Circuit breaker No.	Capacity	Indication on label	Parts (Load)
B-31	30A	(POWER WINDOW)	Power window & door lock SW, Power window motor, Power window relay

GROUNDING POINT

REFERENCE TABLE

(GASOLINE ENGINE – LHD)

Connector No.	Cable harness	Location	Parts (Load)
B-9	Body harness	Body-RH	Fan SW, FRT power window & door lock SW-passenger side, Key, light & seat belt remind buzzer (SAUDI ARABIA)
B-28		Body-LH	Turn signal indicator light, Illumination light (Meter, Heater & A/C control panel, Cigarette lighter, RR defogger SW, Audio, Hazard SW), FRT power window & door lock SW-driver side, RR power window SW, Power window relay, Door mirror control SW, RR defogger, RR defogger SW, Door lock SW-driver side, Audio, Clock, Cigarette lighter, High mounted stop light, Seat belt SW (SAUDI ARABIA)
B-37		Body-RR	Fuel pump
C-2	Engine room harness	Fender-RH	Heater relay, Dimmer·passing SW, Lighting SW, Charge relay, Idle SW (4ZE1), Accel SW (4ZC1, 4ZD1), Engine speed sensor, EFE heater, Starter relay, Radiator level sensor, Radiator level control unit, Windshield intermittent relay, Windshield wiper motor, Side turn signal light-RH
C-36		Fender-LH	Vehicle speed sensor, Speed warning buzzer (SAUDI ARABIA), Speedometer, Fuel tank unit, 4WD SW, Brake fluid level SW, Tachometer (W/Tachometer), Fuel gauge, Clearance light, Seat belt SW (SAUDI ARABIA), Windshield washer motor, Flasher unit, Side turn signal light-LH, FRT turn signal light, Engine coolant temperature gauge (W/Tachometer)
C-81		Engine-RH	Crank angle sensor, Data link connector, ECM, ECM main relay, Oxygen sensor (4ZD1 (MPI))
E-5	Engine harness	Engine	Air regulator, FICD (4ZD1 (MPI))
E-72		Common chamber-RH	Data link connector, ECM, Crank angle sensor
E-73			Ignition coil, ECM
E-74		Common chamber-LH	Ignition coil, ECM, MAF sensor shield, Cam angle sensor shield, Throttle position sensor shield
F-3	Chassis harness	Frame	Tail light, License plate light, Back up light, RR turn signal light, Stop light, Fuel pump

(GASOLINE ENGINE – RHD)

Connector No.	Cable harness	Location	Parts (Load)
B-9	Body harness	Body-LH	Fan SW, FRT power window & door lock SW-passenger side, RR power window SW, Key, light & seat belt remind buzzer (SOUTH AFRICA)
B-28		Body-RH	Illumination light (Meter, Heater & A/C control panel, Cigarette lighter, Ashtray, RR defogger SW, Audio, Hazard SW), Illumination controller, Turn signal indicator light, FRT power window & door lock SW-driver side, Power window relay, Door mirror control SW, RR defogger, RR defogger SW, Door lock SW-driver side, Audio, Clock, Cigarette lighter
B-37		Body-RR	Fuel pump
C-2	Engine room harness	Fender-RH	Vehicle speed sensor, 4WD SW, Brake fluid level SW, Heater relay, Dimmer·passing SW, Lighter SW, Overdriver off SW (4ZE1, A/T), Charge relay, Idle SW (4ZE1), Accel SW (4ZC1, 4ZD1), Engine speed sensor, Starter relay, Windshield intermittent relay, ST. cut relay (4ZE1, A/T), Windshield wiper motor, Flasher unit, Side turn signal light-RH, Mode SW (4ZE1, A/T)
C-36		Fender-LH	Speedometer, Fuel tank unit, Tachometer (W/Tachometer), Engine coolant temperature gauge (W/Tachometer), Fuel gauge, Clearance light, Seat belt SW (SOUTH AFRICA), Windshield washer motor, Side turn signal light-LH, FRT turn signal light
C-81		Engine-RH	Crank angle sensor, Data link connector, ECM, Fuel pump relay, ECM main relay
E-5	Engine harness	Engine	FICD (4ZD1 (MPI)), Air regulator
E-72		Common chamber-RH	Data link connector, ECM, Crank angle sensor shield
E-73			Ignition coil, ECM
E-74		Common chamber-LH	Ignition coil, ECM, TCM, Mode SW, MAF sensor shield, Cam angle sensor shield Throttle position sensor shield
F-3	Chassis harness	Frame	Tail light, License plate light, Fuel pump, Stop light, RR turn signal light, Back up light

(DIESEL ENGINE – LHD)

Connector No.	Cable harness	Location	Parts (Load)
B-9	Body harness	Body-RH	Fan SW, FRT power window & door lock SW-passenger side, Key, light & seat belt remind buzzer (SAUDI ARABIA)
B-28		Body-LH	Turn signal indicator light, Illumination light (Meter, Heater & A/C control panel, Cigarette lighter, RR defogger SW, Audio, Hazard SW), FRT power window & door lock SW-driver side, RR power window SW, Door mirror control SW, RR defogger, RR defogger SW, FRT door lock SW-driver side, Audio, Clock, Cigarette lighter, High mounted stop light, Power window relay, Seat belt SW (SAUDI ARABIA)
C-2	Engine room harness	Fender-RH	Vehicle speed sensor, 4WD SW, Tacho sensor, Heater relay, VSV; FICD, Dimmer·passing SW, Lighting SW, QOS-II control unit, Starter relay, Charge relay, Windshield wiper motor, Windshield intermittent relay, Side turn signal light-RH
C-36		Fender-LH	Speedometer, Fuel tank unit, Fuel filter SW, Brake fluid level SW, Tachometer (W/Tachometer), Engine coolant temperature gauge (W/Tachometer), Fuel gauge, Clearance light, Seat belt SW (SAUDI ARABIA), Windshield washer motor, Side turn signal light-LH, FRT turn signal light, Flasher unit
F-3	Chassis harness	Frame	Tail light, License plate light, Stop light, RR turn signal light, Back up light

(DIESEL ENGINE – RHD)

Connector No.	Cable harness	Location	Parts (Load)
B-9	Body harness	Body-LH	Fan SW, FRT power window & door lock SW-passenger side, RR power window SW, Key, light & seat belt remind buzzer (SOUTH AFRICA)
B-28		Body-RH	Turn signal indicator light, Illumination light (Meter, Heater & A/C control panel, Cigarette lighter, Ashtray, RR defogger SW, Audio, Hazard SW), Illumination controller, FRT power window & door lock SW-driver side, Power window relay, Door mirror control SW, RR defogger, RR defogger SW, FRT door lock SW-driver side, Audio, Clock, Cigarette lighter
C-2	Engine room harness	Fender-RH	Vehicle speed sensor, 4WD SW, Brake fluid level SW, Tacho sensor, Heater relay, VSV; FICD, Dimmer·passing SW, Lighting SW, QOS-II control unit, Starter relay, Charge relay, Windshield intermittent relay, Windshield wiper motor, ST. cut relay (4JA1, SOUTH AFRICA), Side turn signal light-RH, Flasher unit
C-36		Fender-LH	Speedometer, Fuel tank unit, Fuel filter SW, Tachometer (W/Tachometer), Engine coolant temperature gauge (W/Tachometer), Fuel gauge, Timing belt warning light, Fuel filter SW, Clearance light, Seat belt SW (SOUTH AFRICA), Windshield washer motor, Side turn signal light-LH, FRT turn signal light
F-3	Chassis harness	Frame	Tail light, License plate light, Stop light, RR turn signal light, Back up light

LOCATION

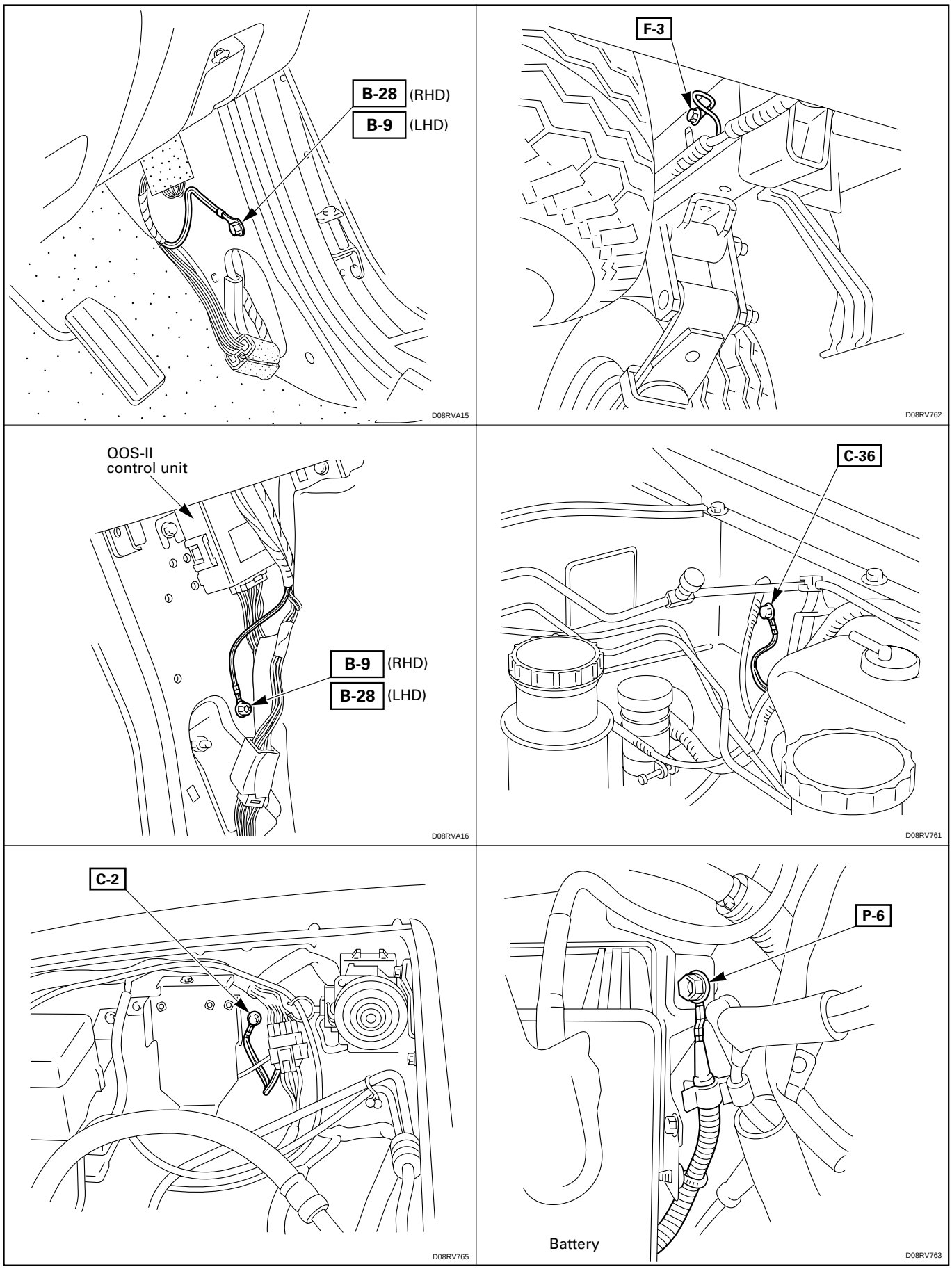
B-28 (RHD)
B-9 (LHD)
D08RVA15
F-3
D08RV762
QOS-II
control unit
B-9 (RHD)
B-28 (LHD)
D08RVA16
C-36
D08RV761
C-2
D08RV765
P-6
Battery
D08RV763

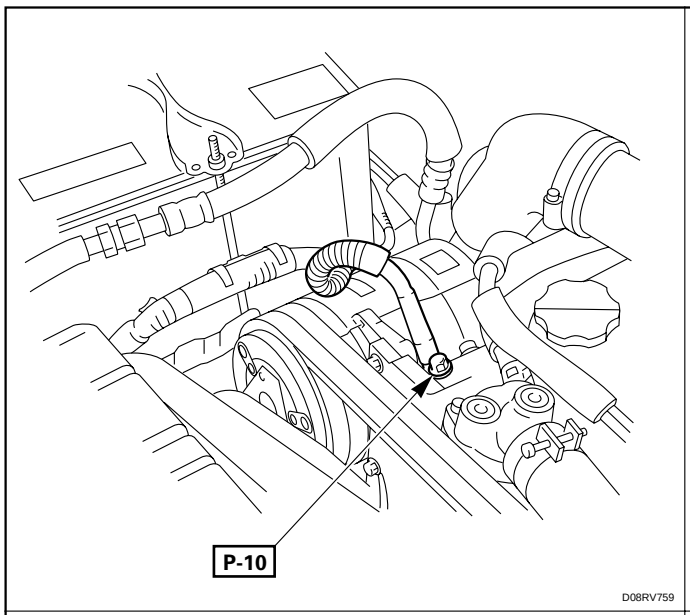
P-10
D08RV759

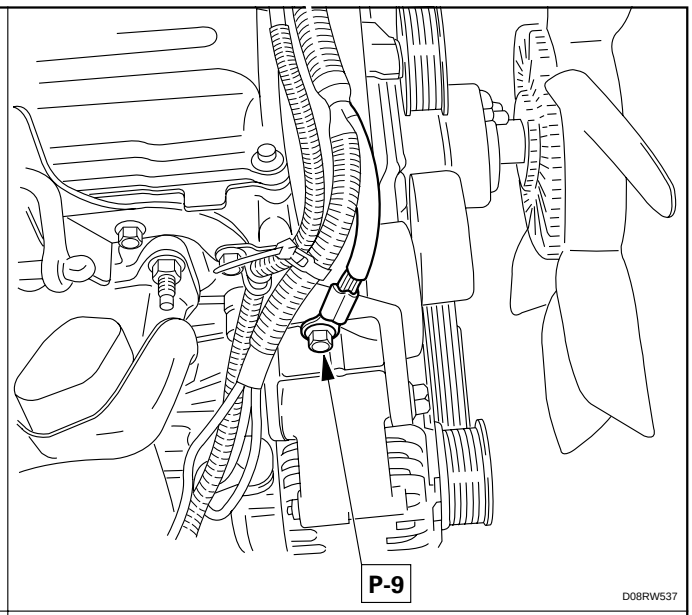
P-9
D08RW537

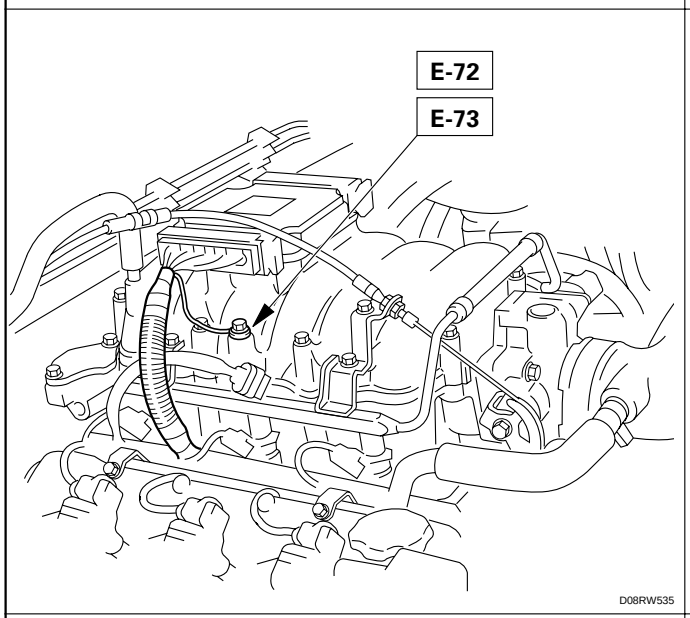
E-72
E-73
D08RW535

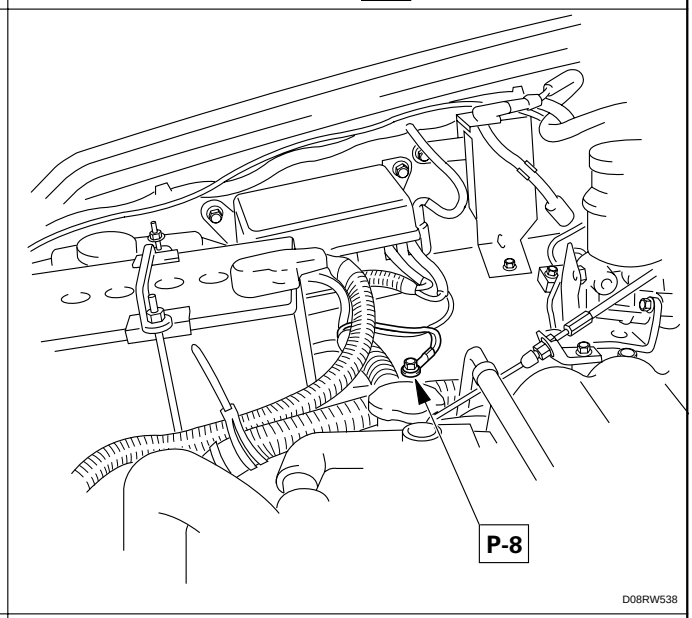
P-8
D08RW538

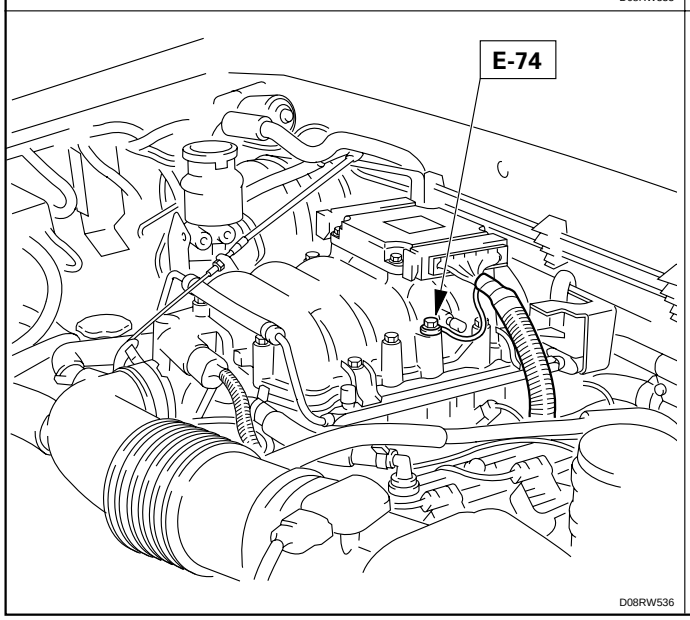
E-74
D08RW536

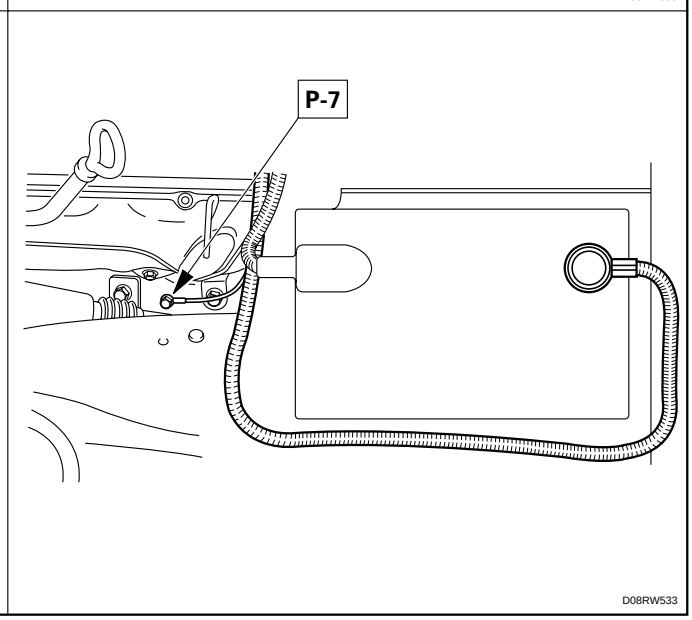
P-7
D08RW533

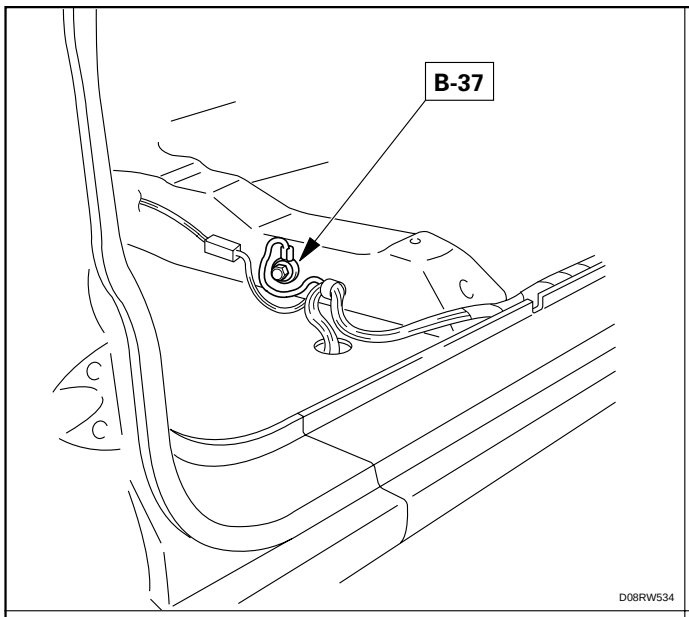
B-37
C
C
C
D08RW534

MAIN CABLE HARNESS ROUTING

(LHD)

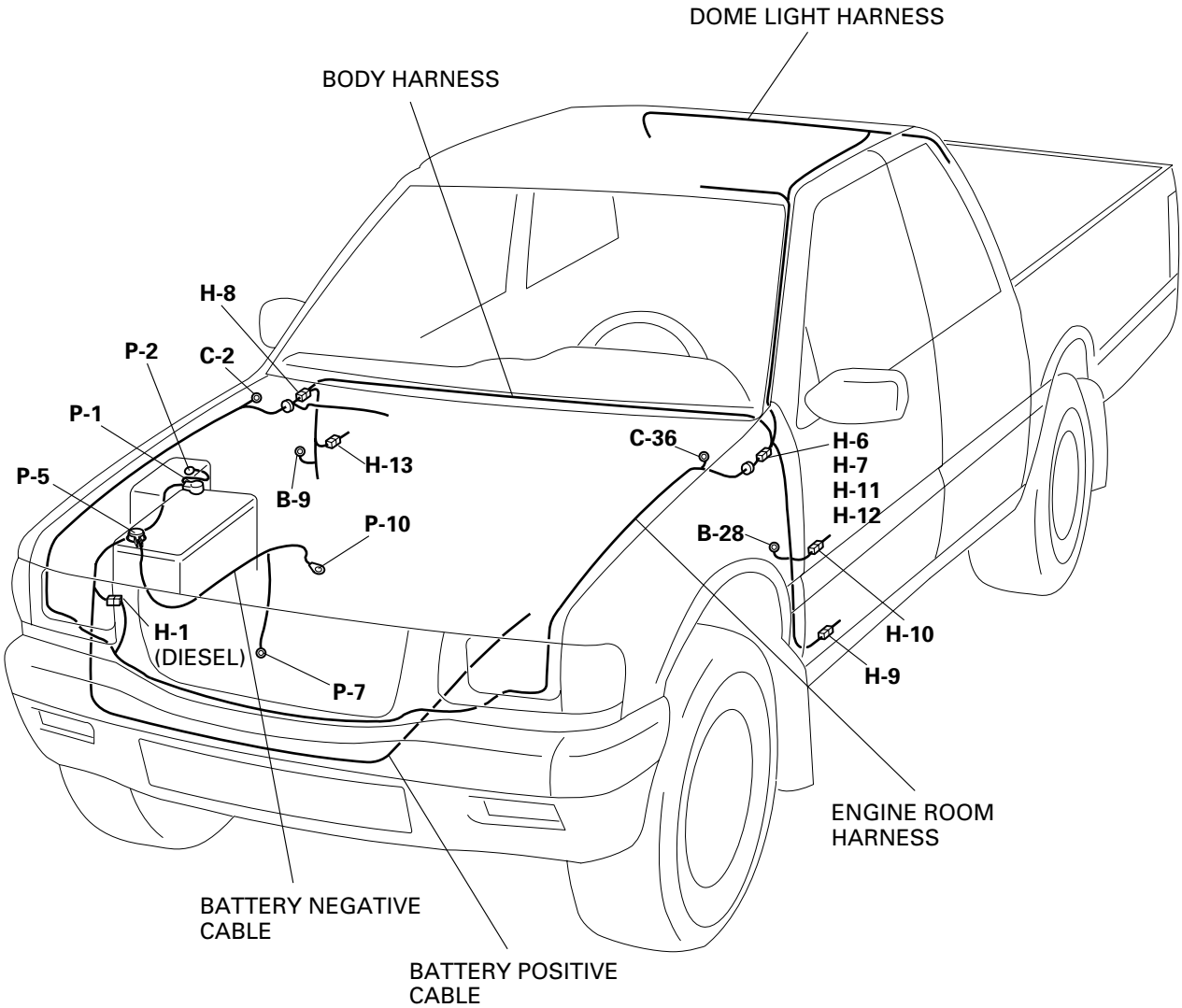

D08RVA55

(LHD)

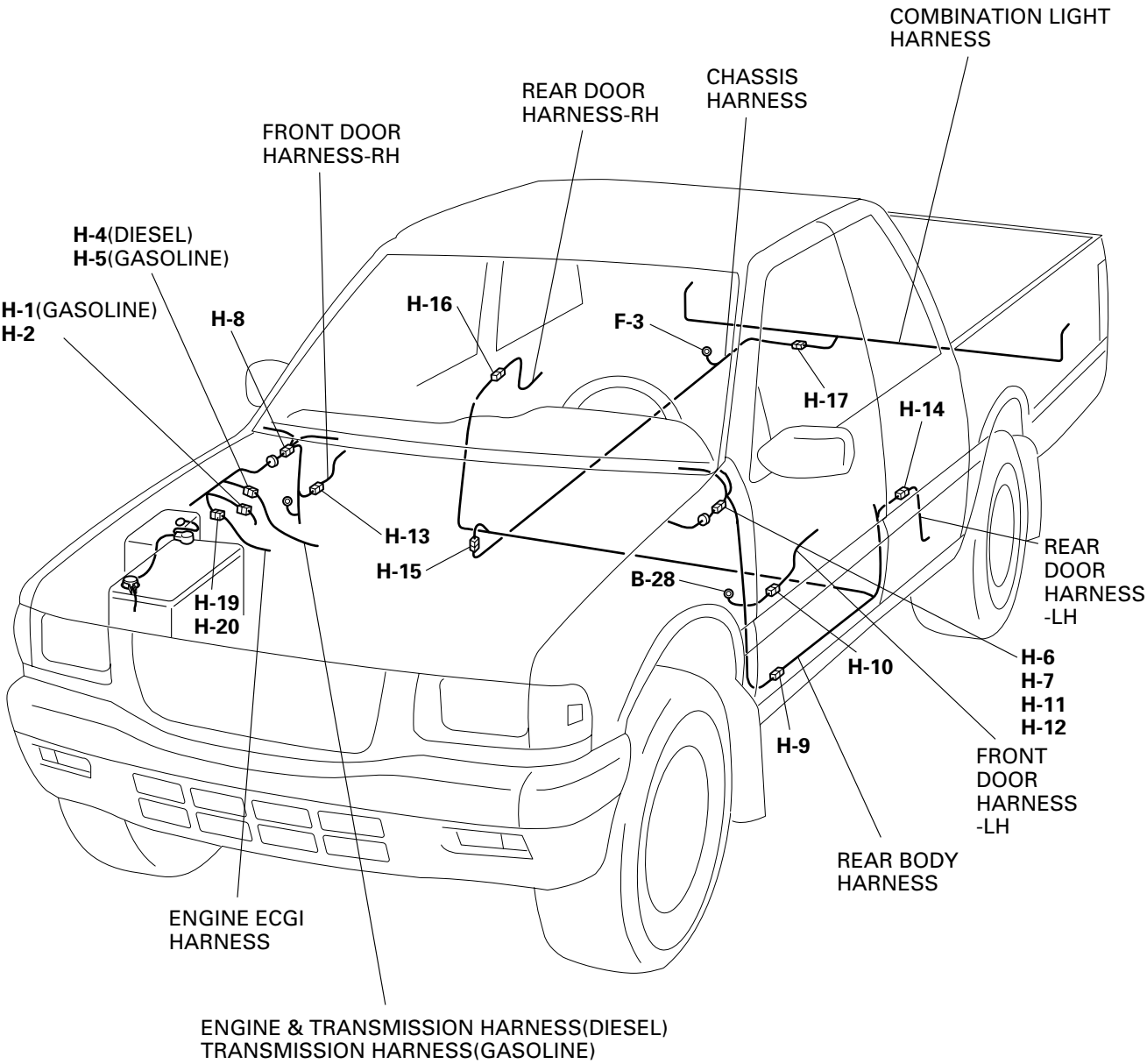

D08RVA56

(LHD-6VD1)

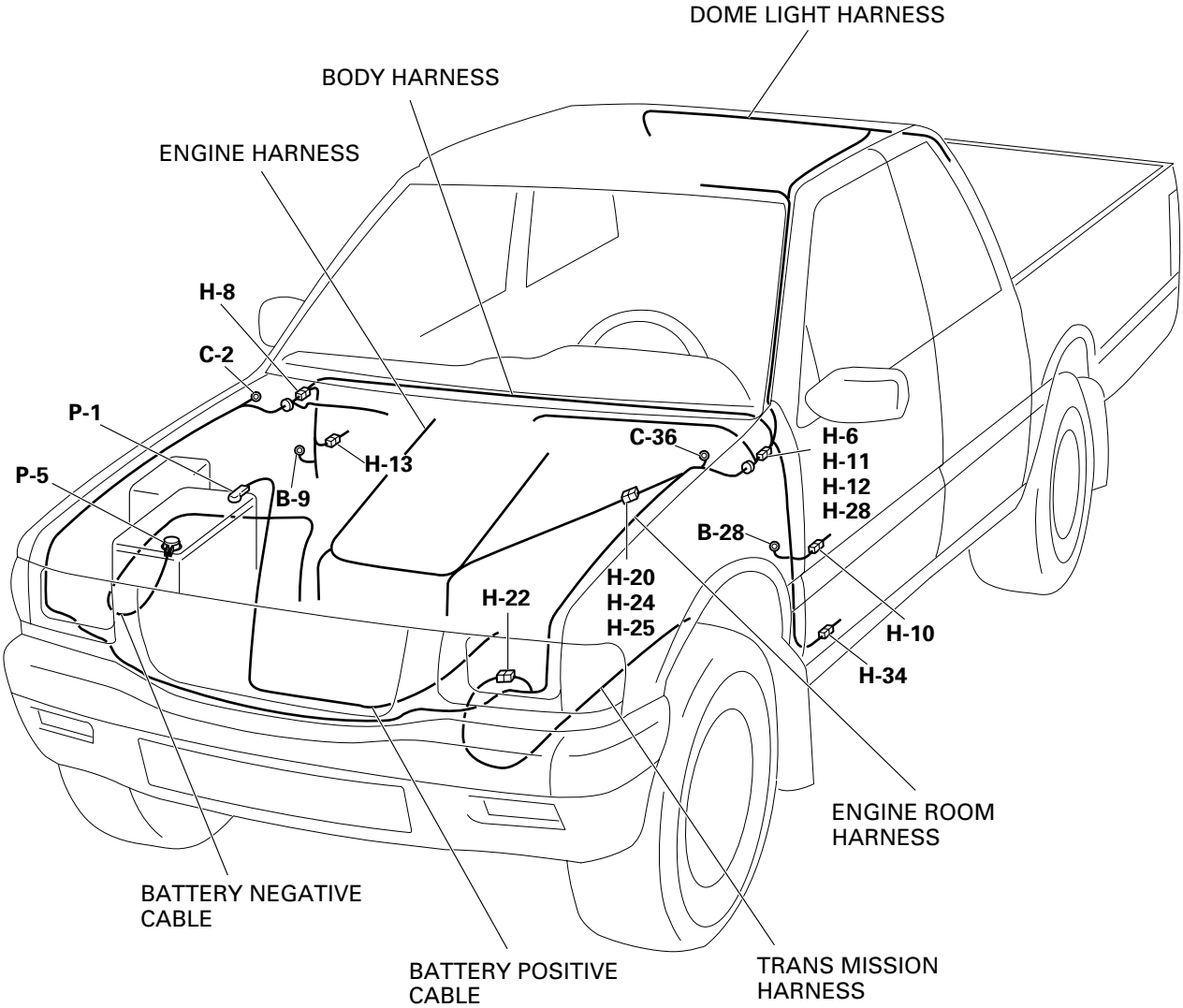

D08RW561

(LHD-6VD1)

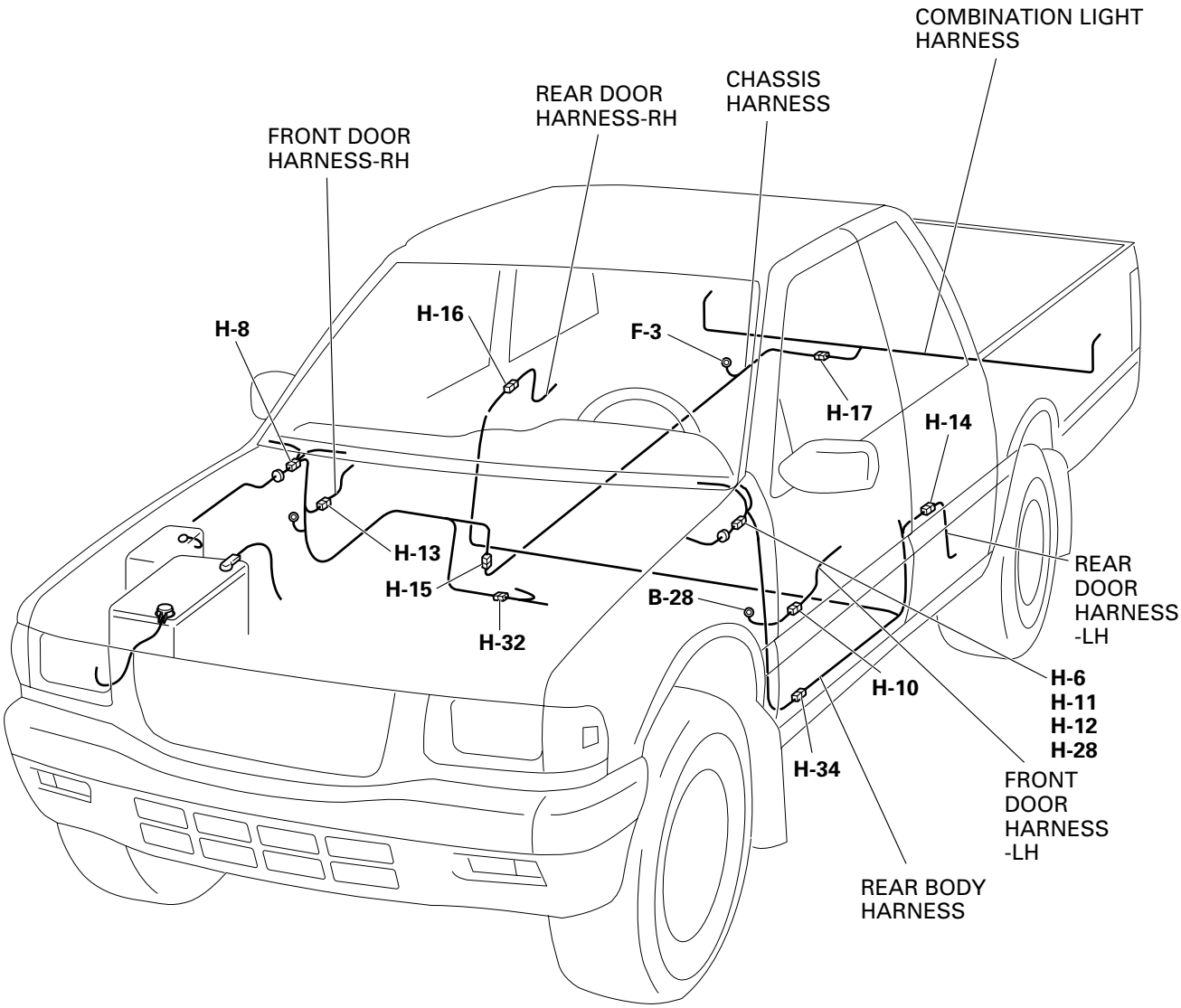

D08RW562

(RHD)

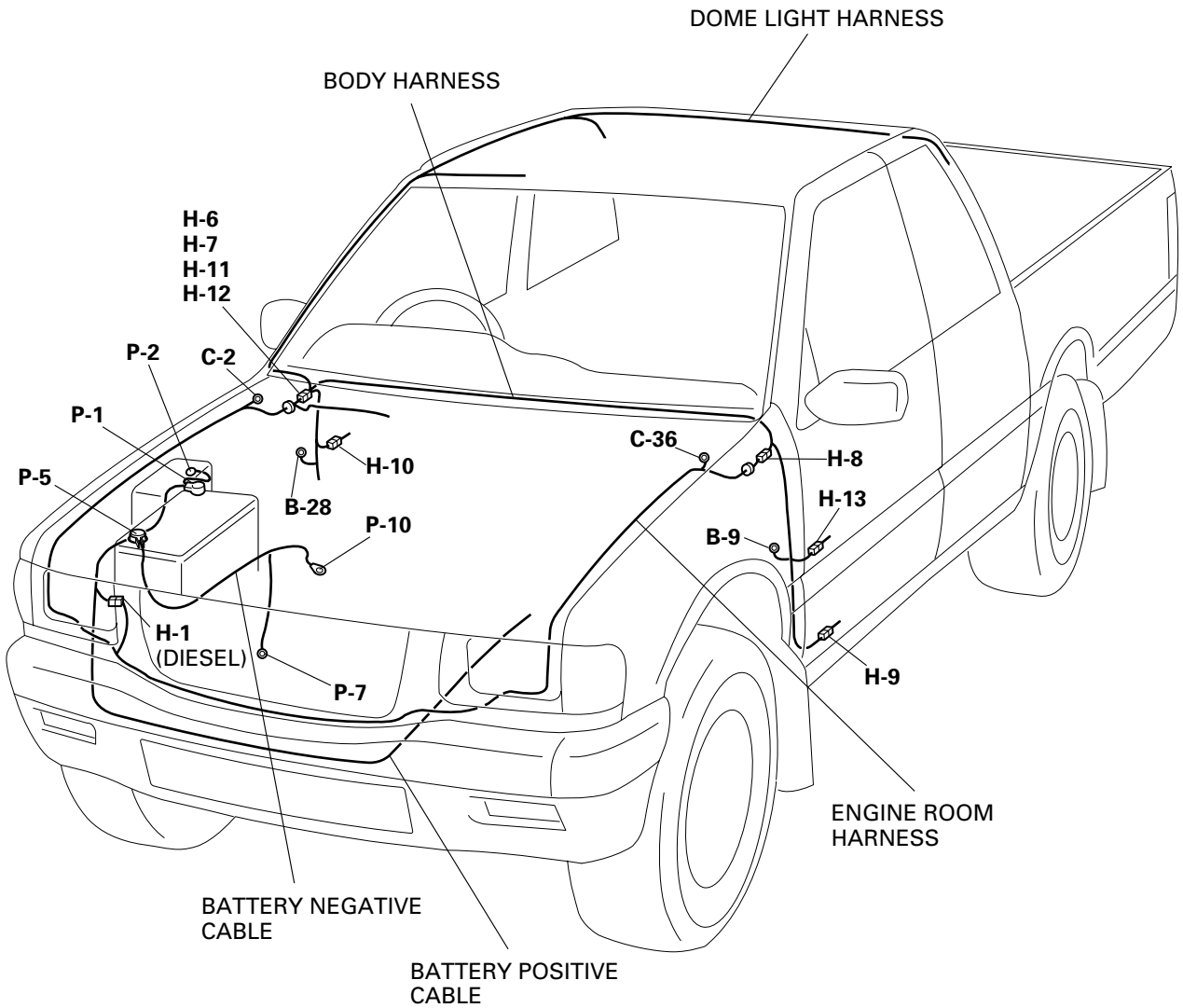

D08RVA57

(RHD)

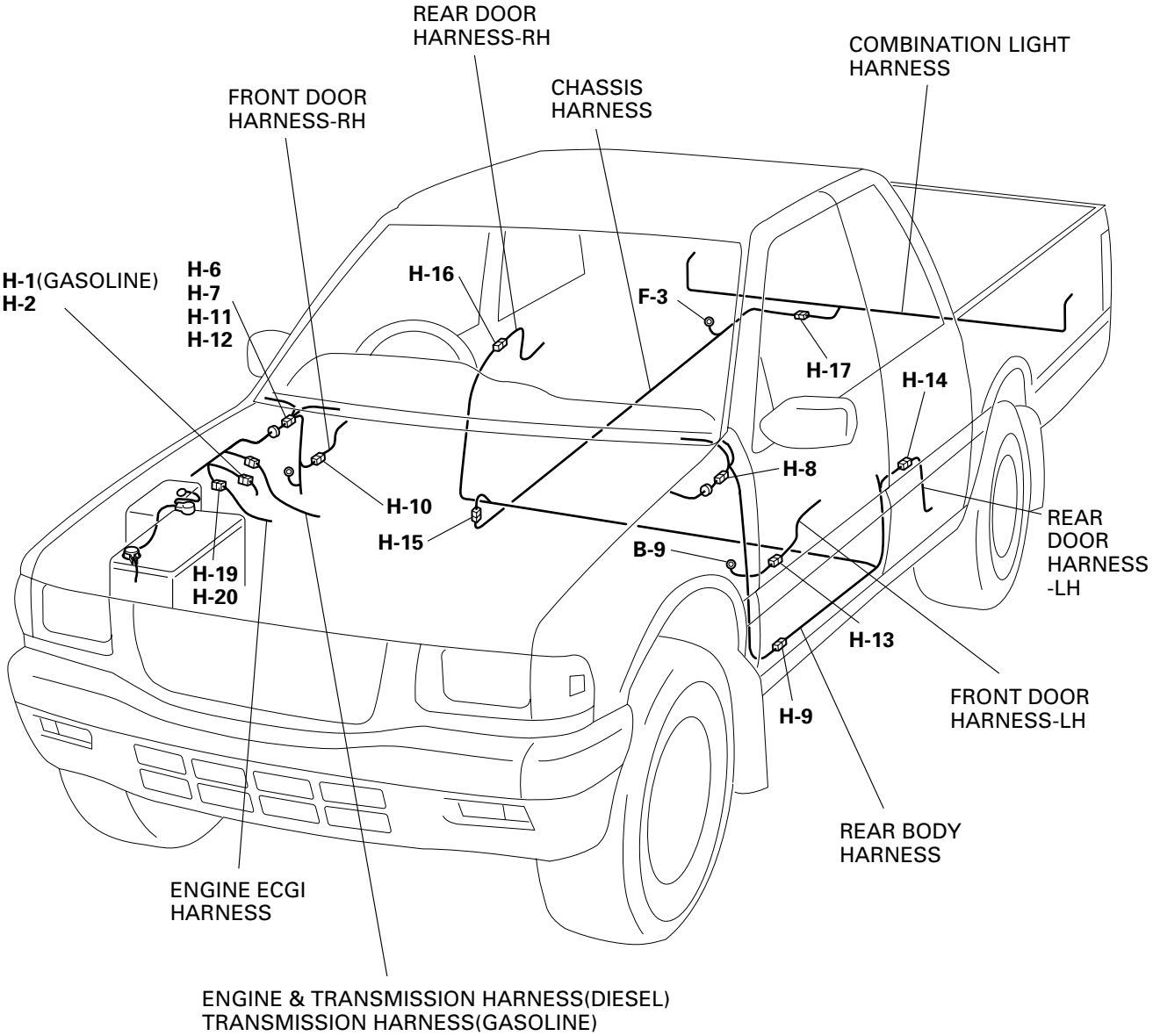

D08RVA58

(RHD-6VD1)

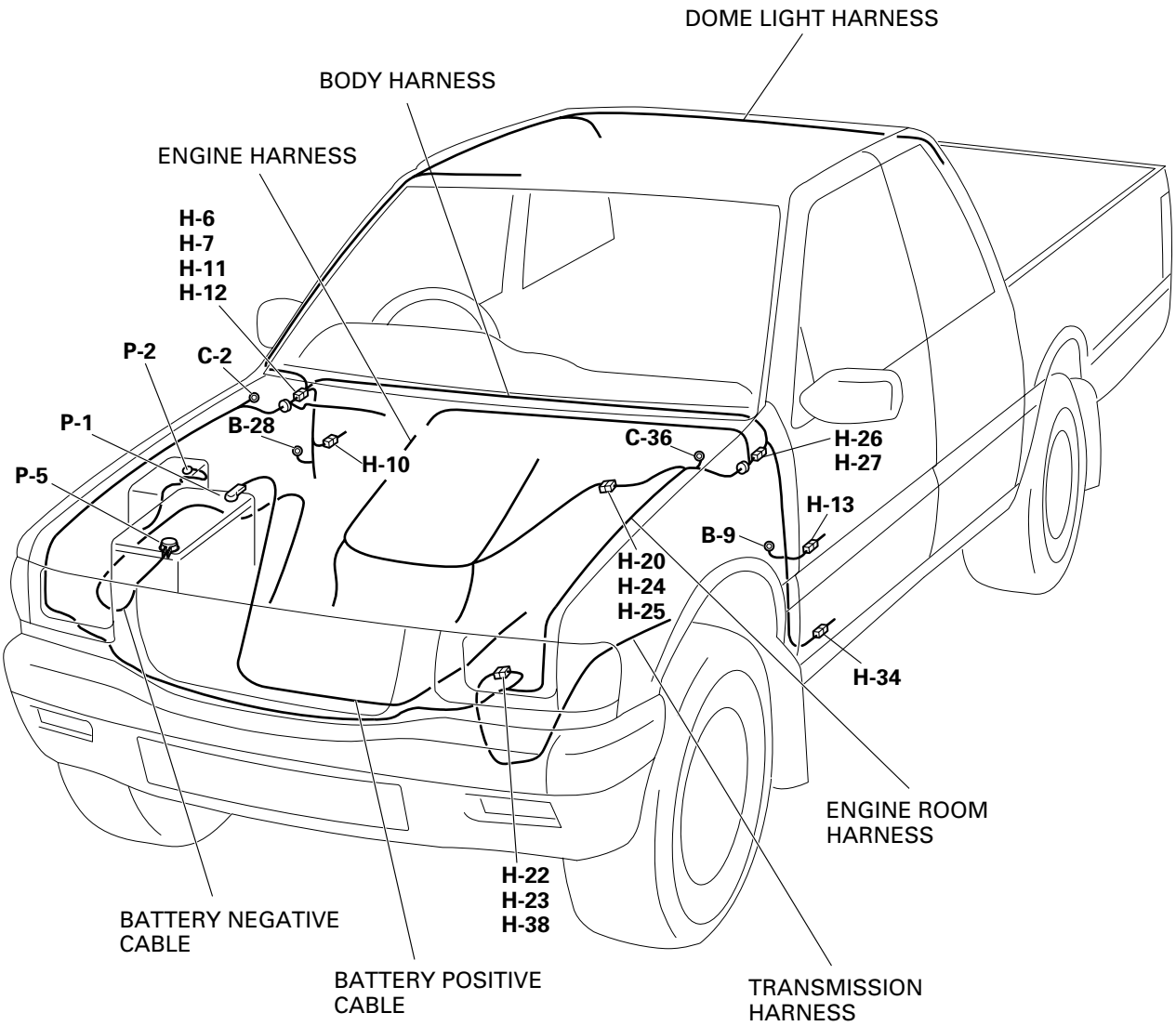

D08RW559

(RHD-6VD1)

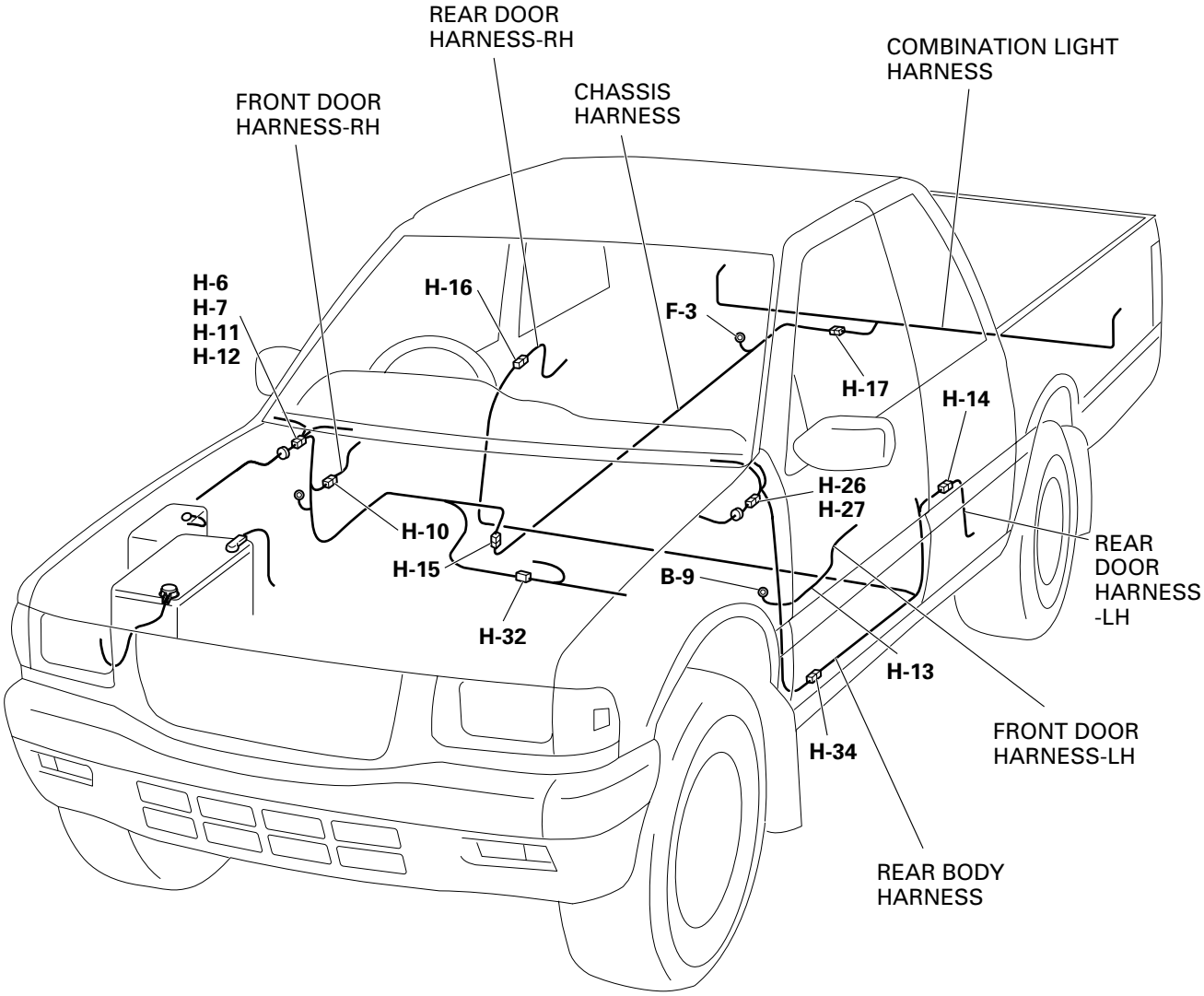

D08RW560

SYSTEM REPAIR

START AND CHARGING

PARTS LOCATION (GASOLINE ENGINE – LHD)

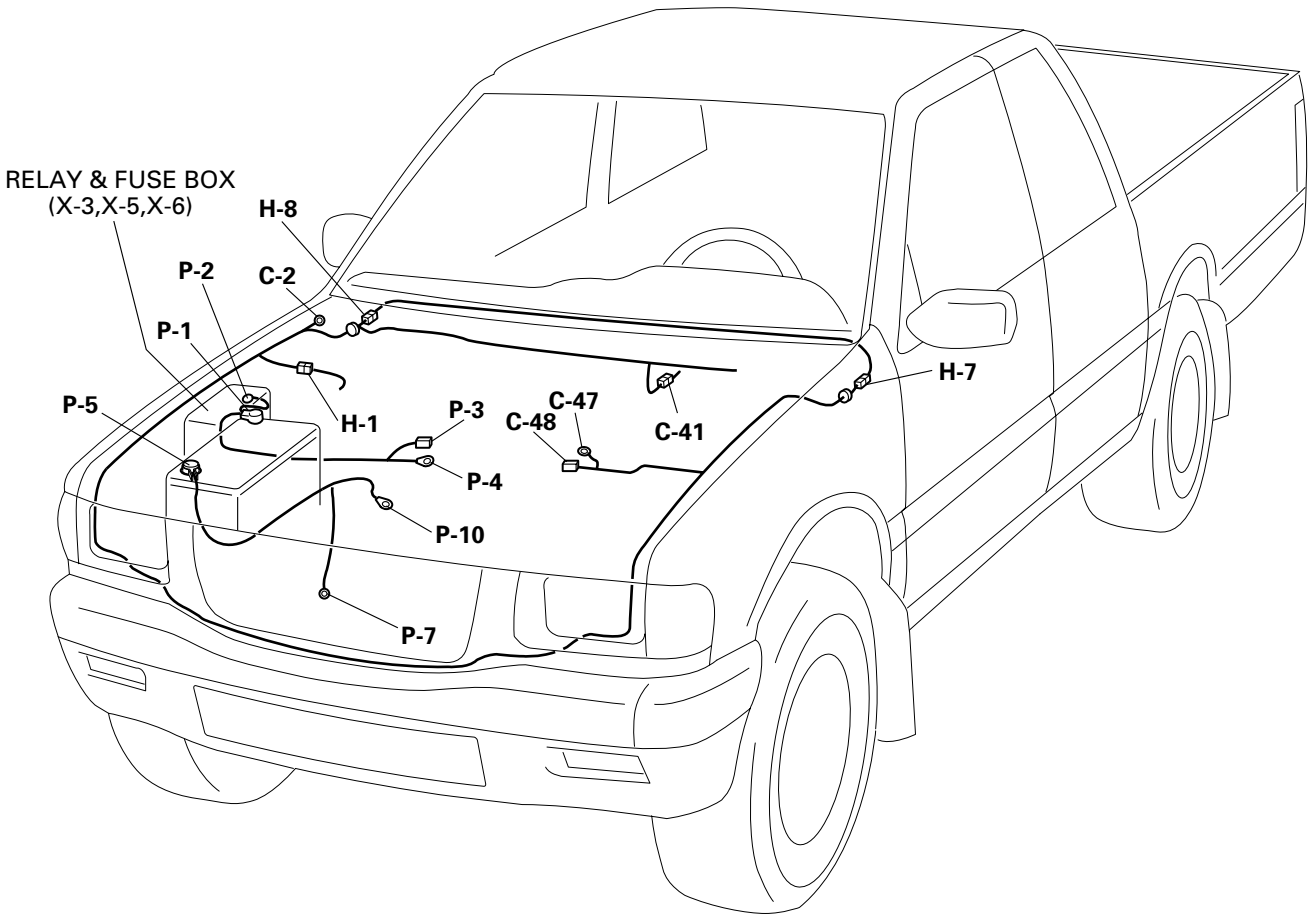

D08RVA17

PARTS LOCATION (6VD1 GASOLINE ENGINE-LHD)

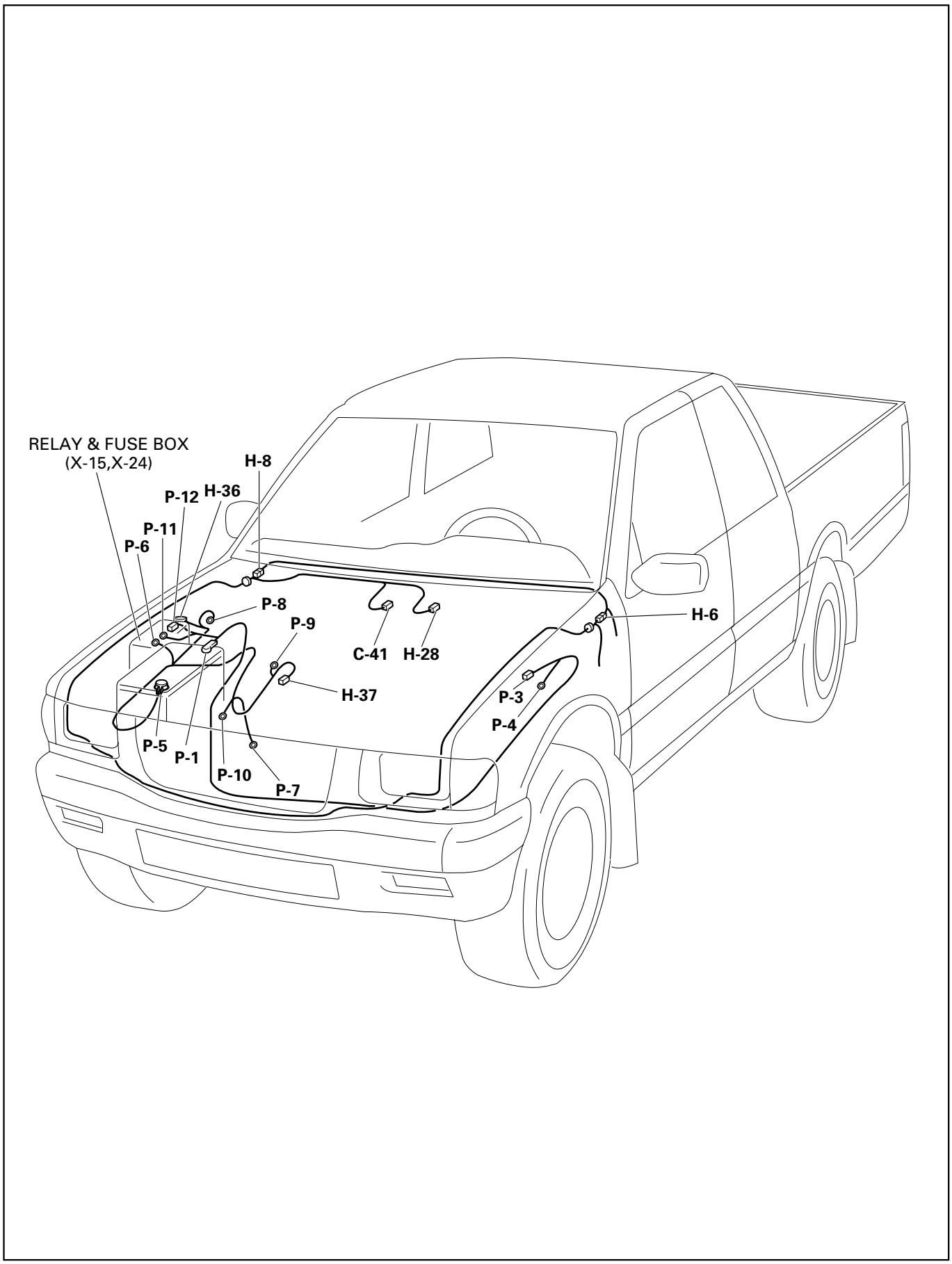

PARTS LOCATION (6VD1 GASOLINE ENGINE-RHD)

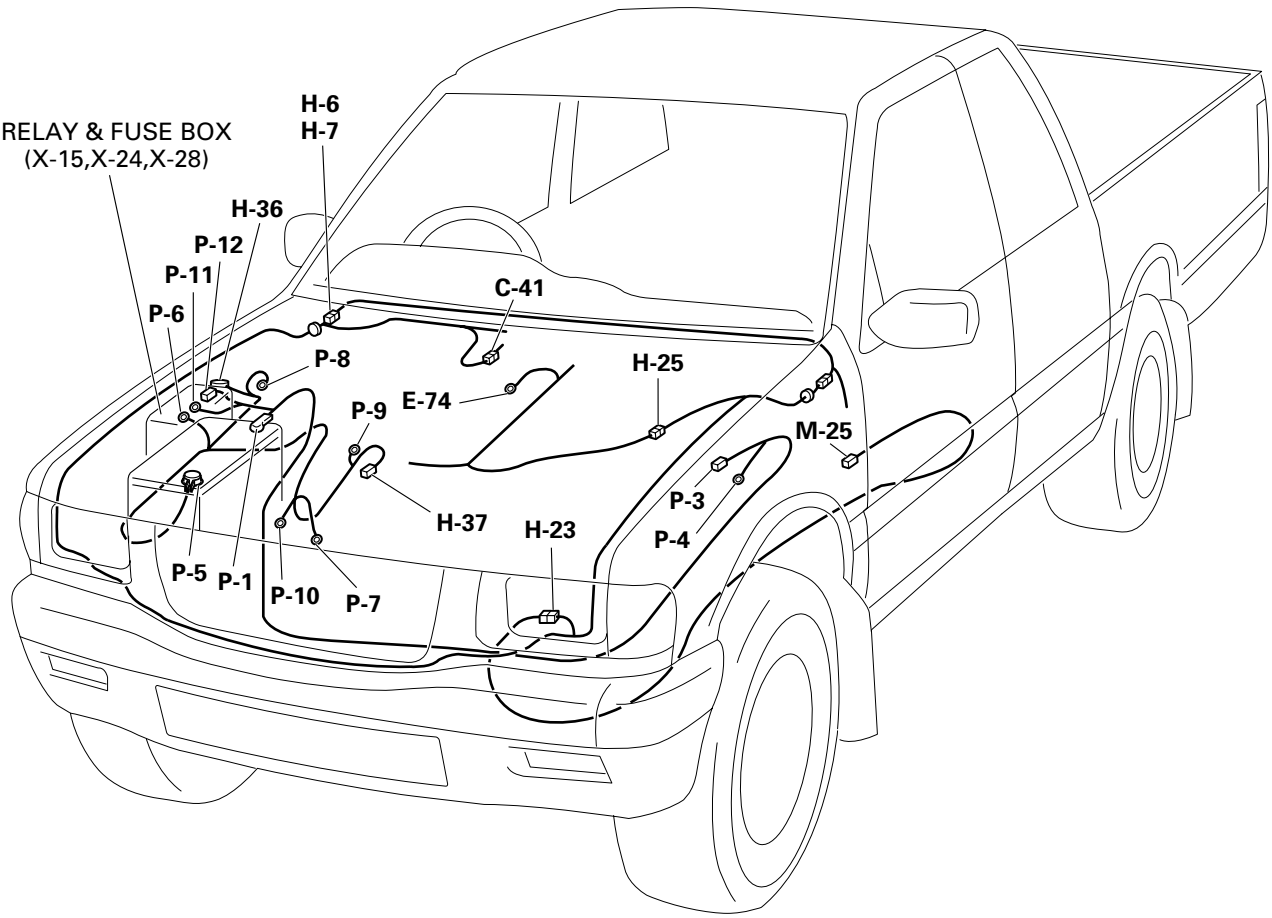

D08RW547

PARTS LOCATION (GASOLINE ENGINE – RHD)

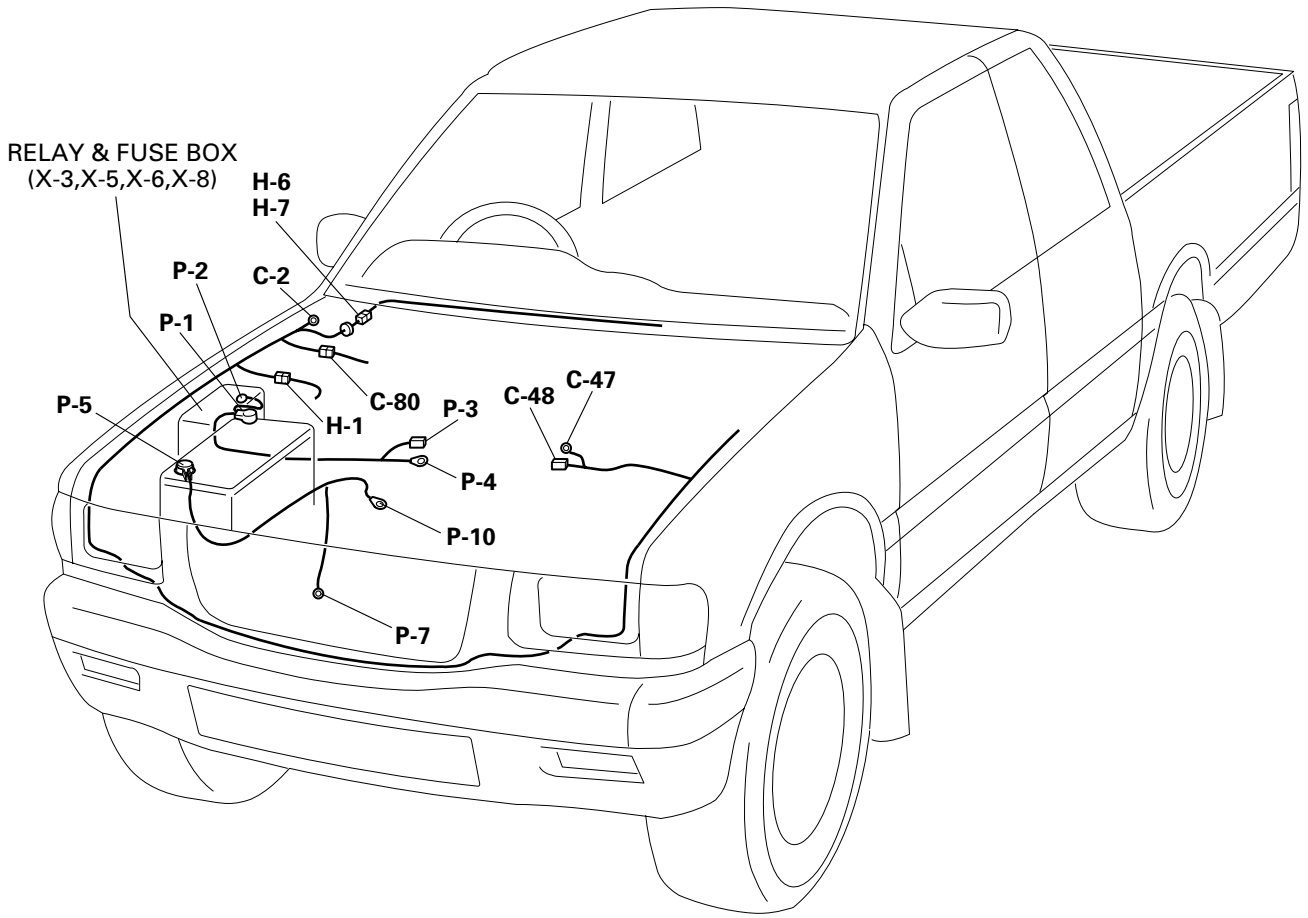

D08RVA19

PARTS LOCATION (DIESEL ENGINE – LHD)

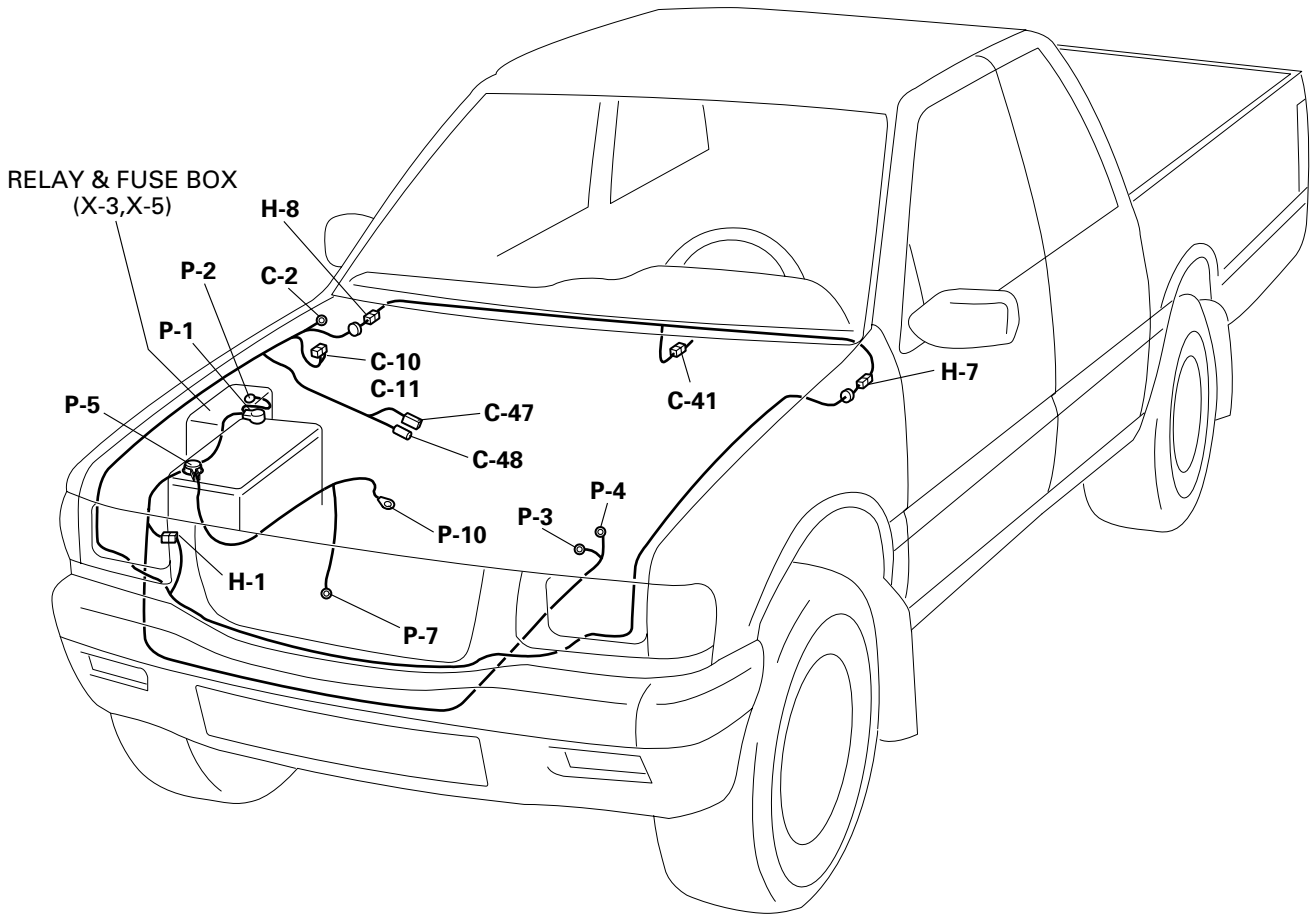

D08RVA18

PARTS LOCATION (DIESEL ENGINE – RHD)

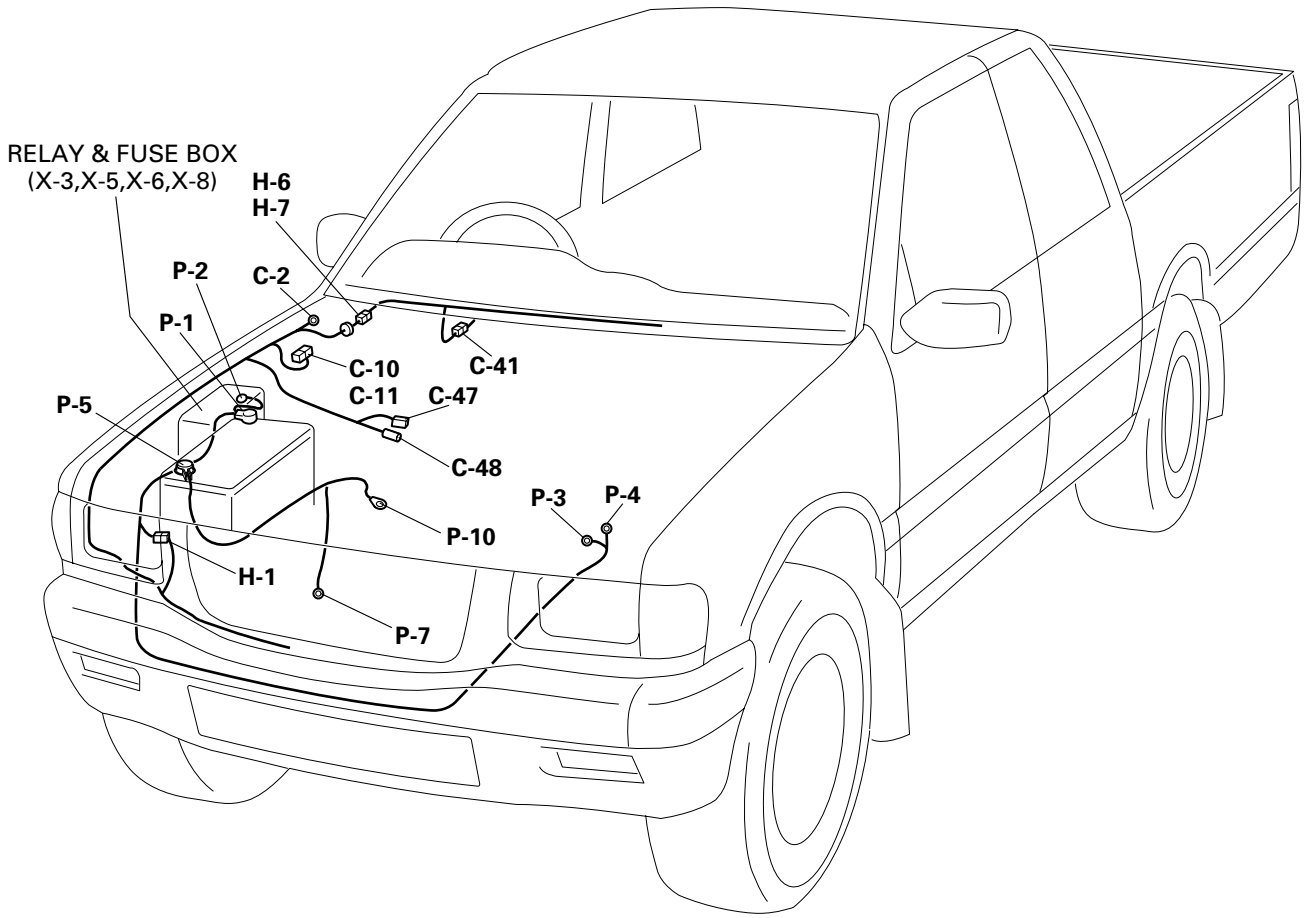

D08RVA20

CIRCUIT DIAGRAM (GASOLINE ENGINE EXCEPT 4ZE1 (MPI) ENGINE)

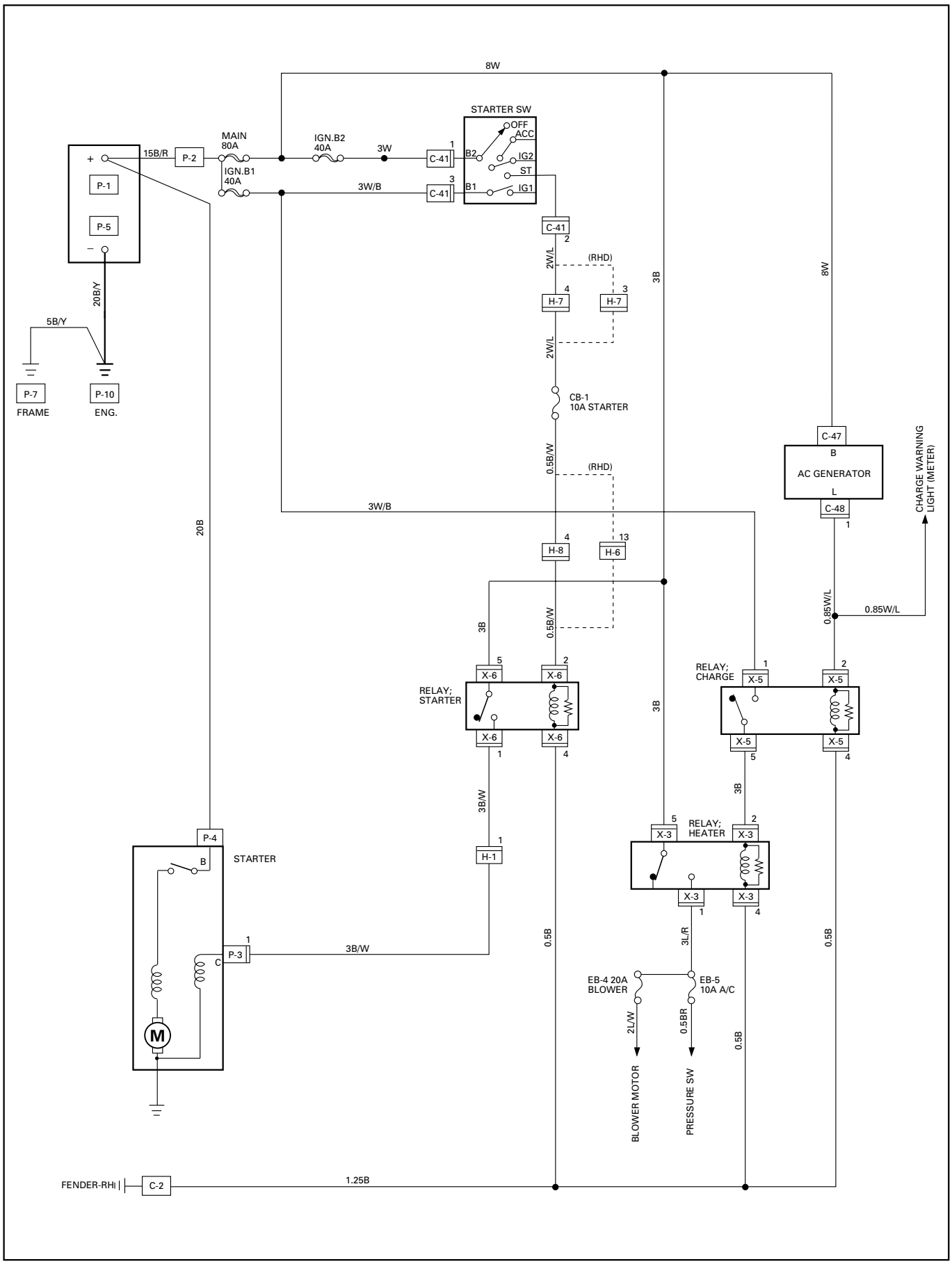

D08RV935

CIRCUIT DIAGRAM (4ZE1 (MPI) GASOLINE ENGINE)

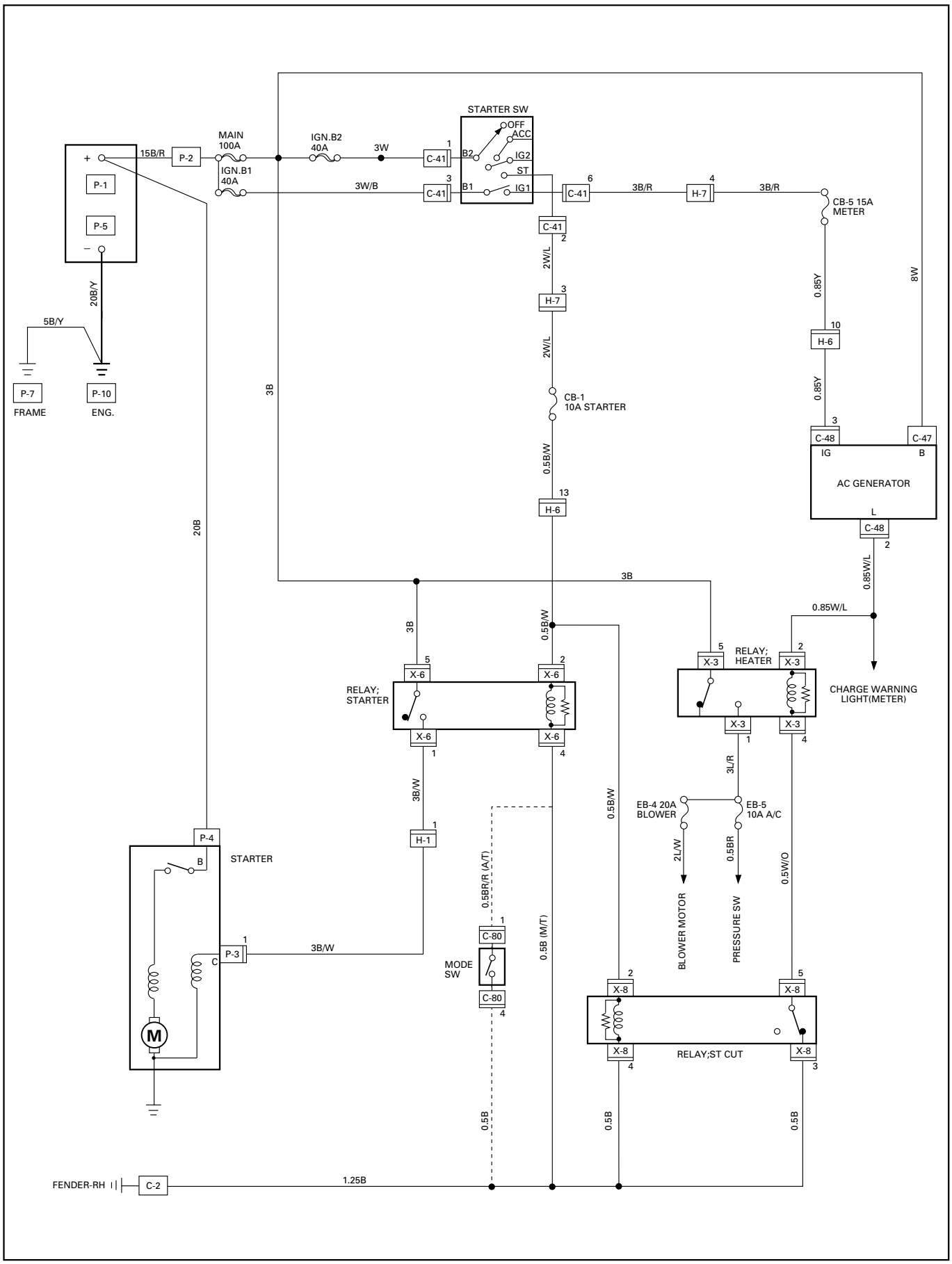

D08RV934

CIRCUIT DIAGRAM (6VD1 GASOLINE ENGINE-LHD)

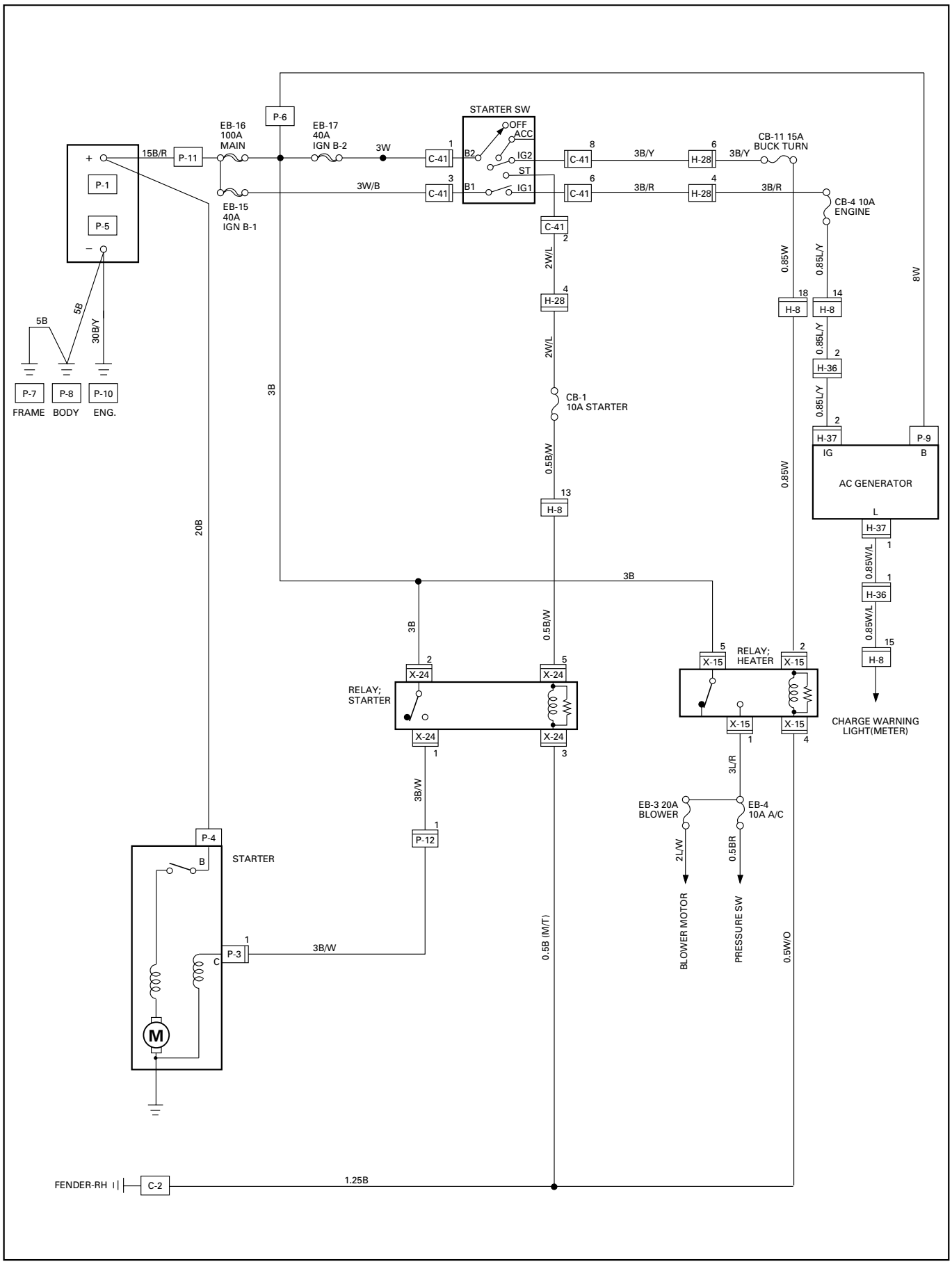

D08RW544

CIRCUIT DIAGRAM (6VD1 GASOLINE ENGINE-RHD)

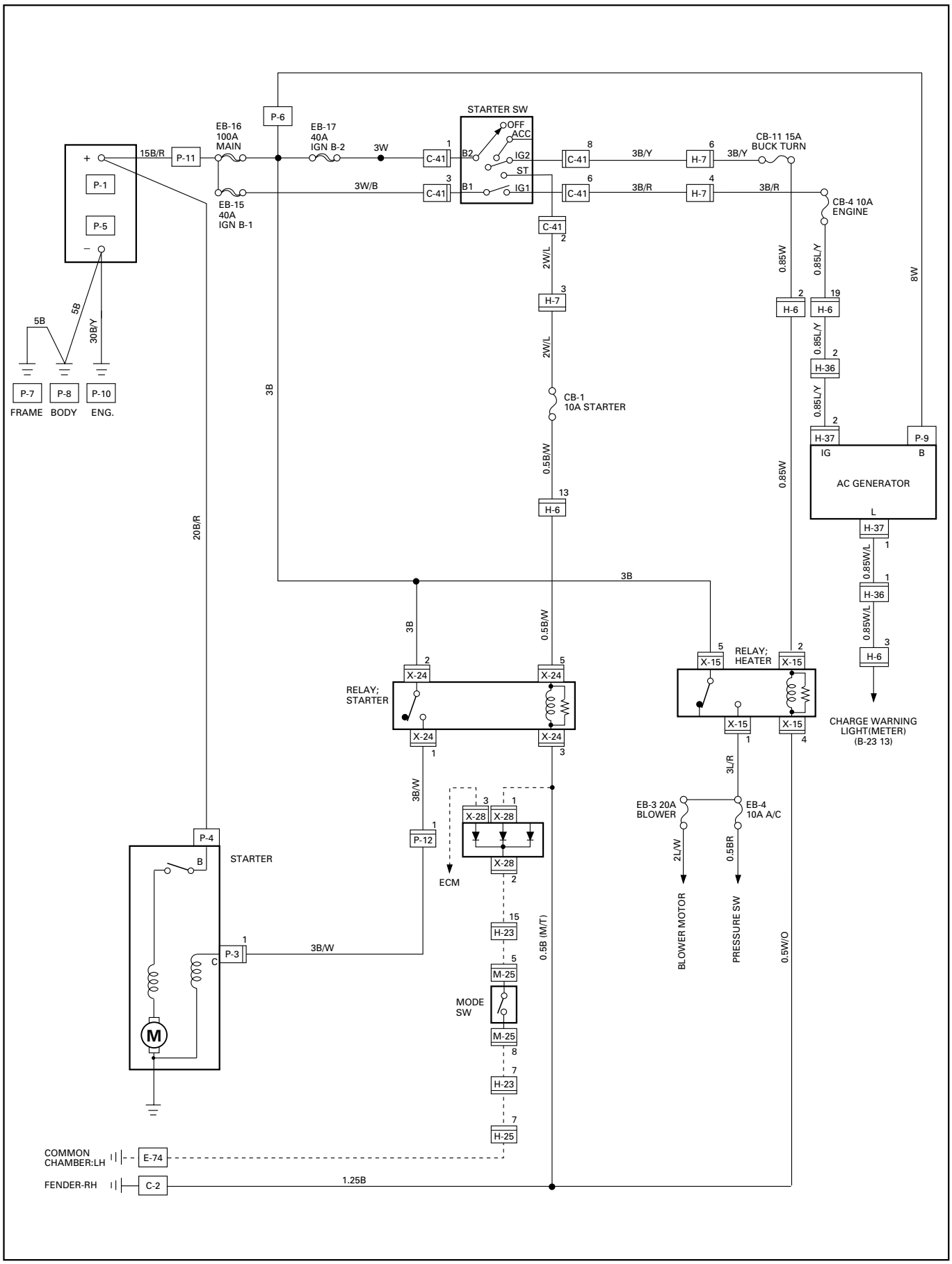

D08RW545

CIRCUIT DIAGRAM (DIESEL ENGINE – LHD)

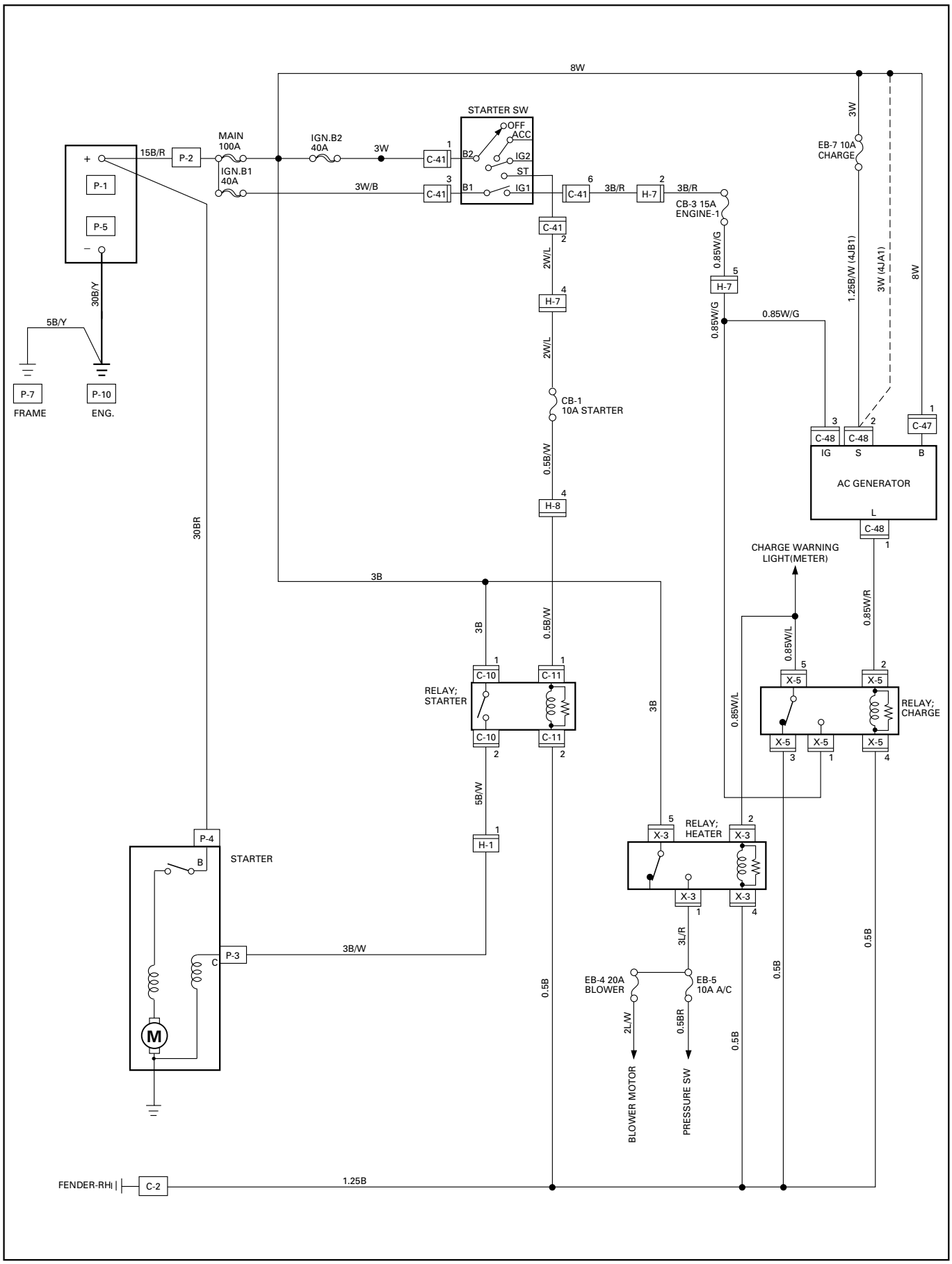

D08RV931

CIRCUIT DIAGRAM (DIESEL ENGINE – RHD)

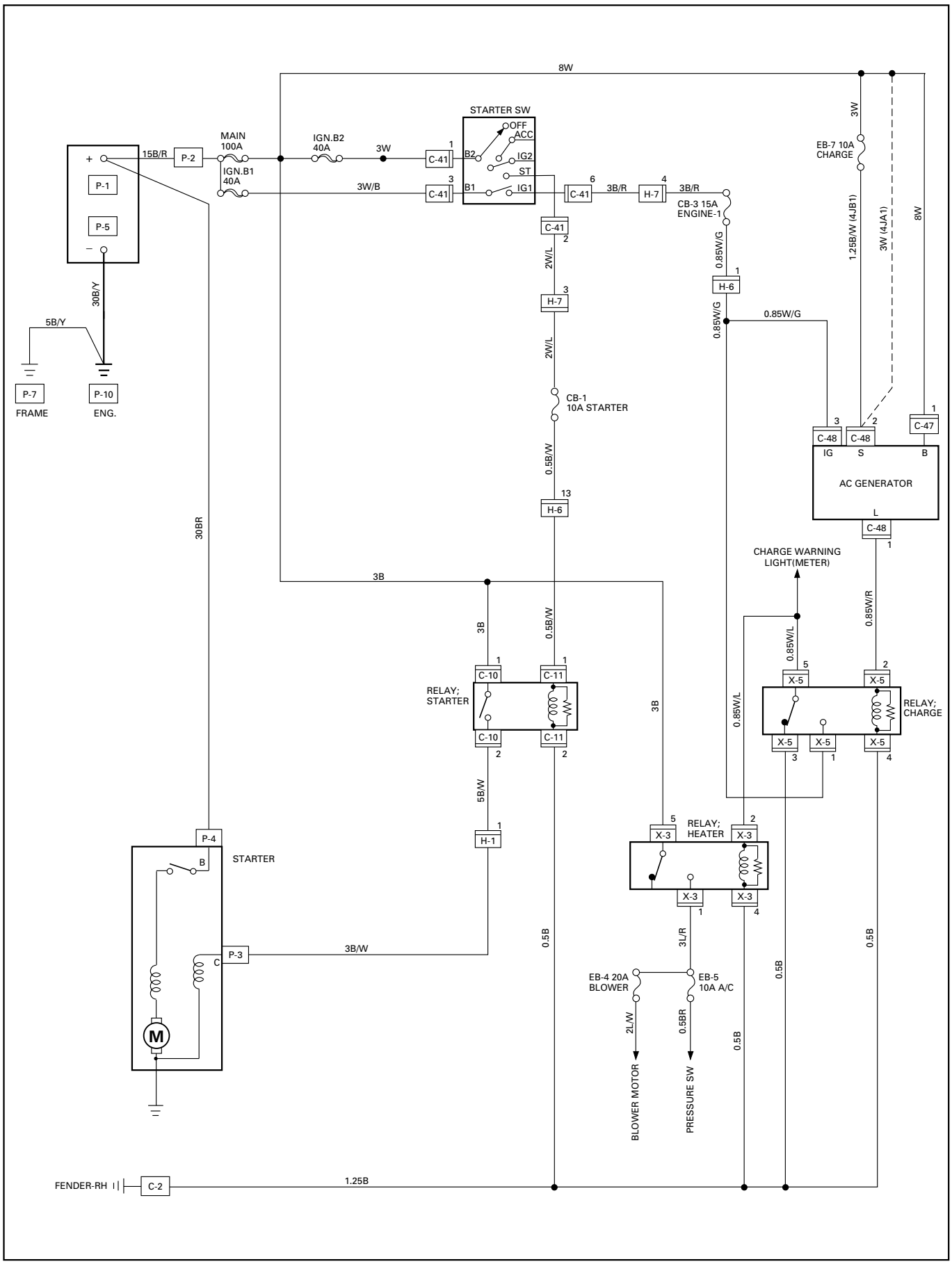

D08RV932

CIRCUIT DIAGRAM (4JA1 DIESEL ENGINE – SOUTH AFRICA)

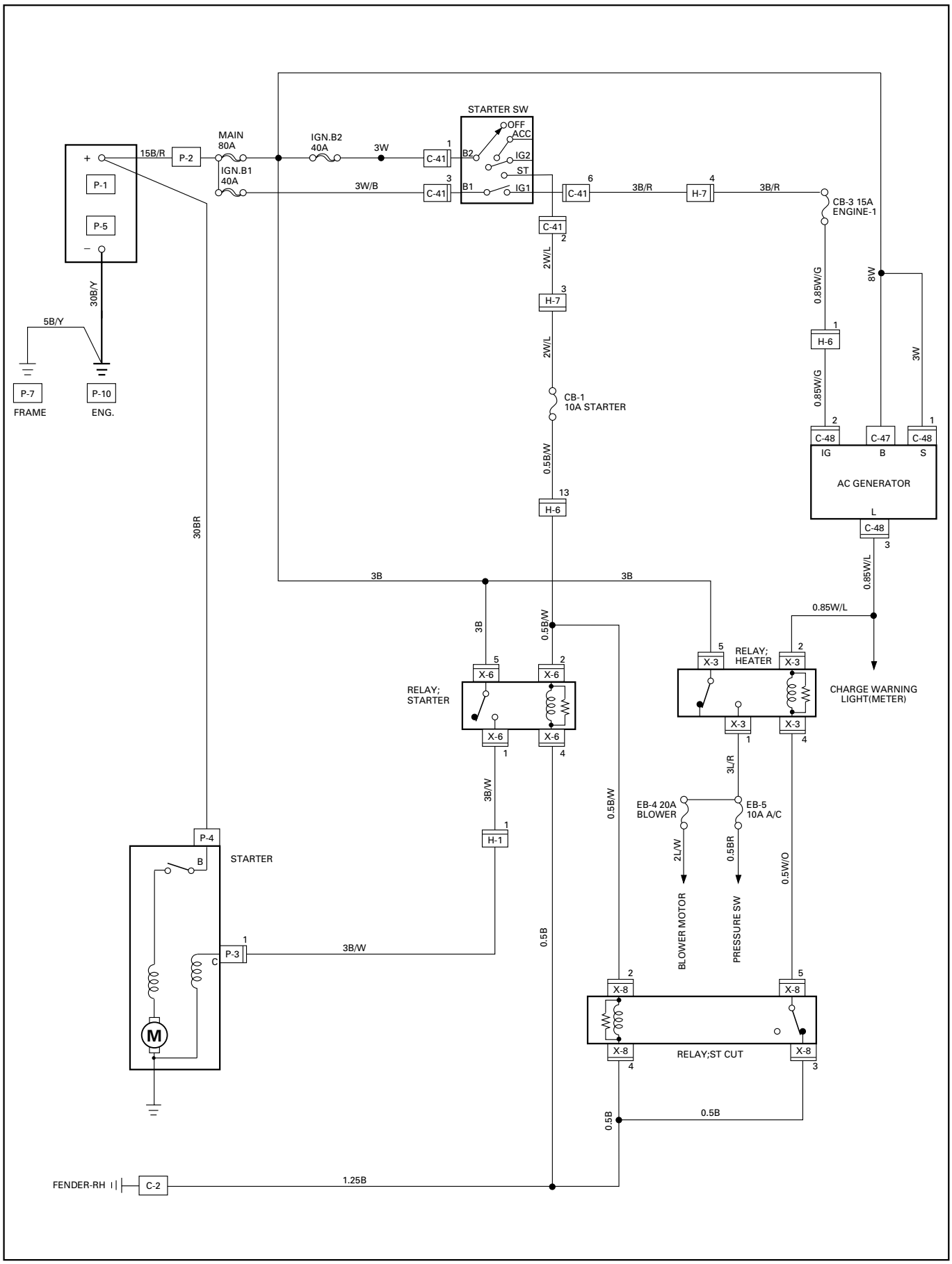

D08RV933

REMOVAL AND INSTALLATION

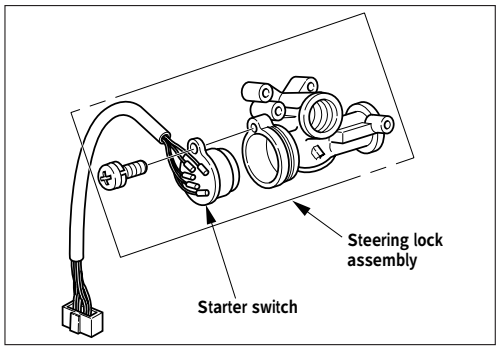

730RS005

STARTER SWITCH

Removal

1. **Steering Lock Assembly**
   - Refer to Section 3B" STEERING COLUMN" for steering lock assembly removal steps.
2. **Starter Switch**

Installation

Follow the removal procedure in the reverse order to install the starter switch.

INSPECTION AND REPAIR

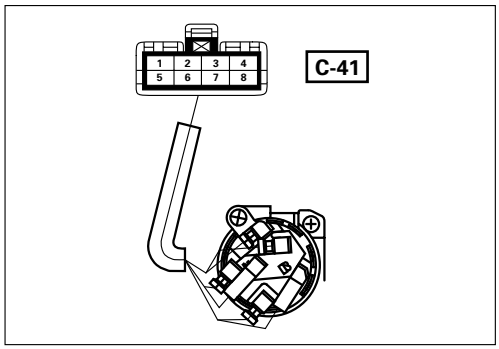

730RV001

STARTER SWITCH

Switch Connections

Starter switch key position \ Terminal No.		1 (B2)	4 (ACC)	8 (IG2)	2 (ST)	3 (B1)	6 (IG1)
LOCK	Removed						
	Inserted						
OFF							
ACC		○	○				
ON		○	○	○		○	○
START		○		○	○	○	○

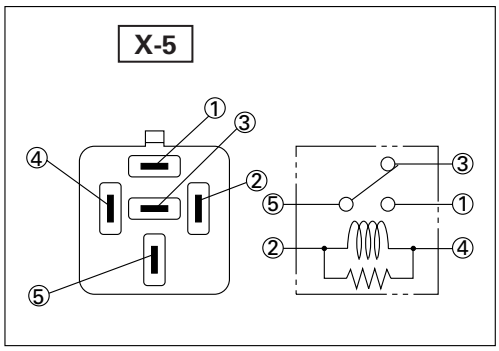

060RV005

Charge relay (Diesel engine)

Check continuity between the relay terminals.

③ – ⑤ . . . . . Continuity
① – ⑤ . . . . . No continuity

(When battery voltage is applied between ② and ④)

③ – ⑤ . . . . . No continuity
① – ⑤ . . . . . Continuity

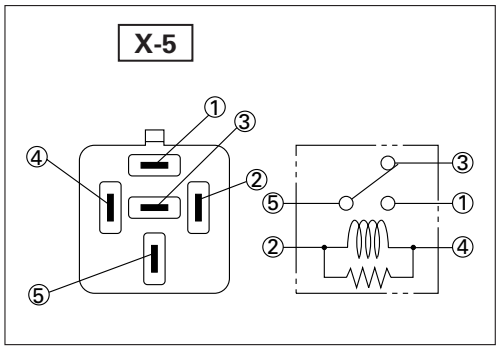

060RV005

Charge relay (Gasoline engine except 4ZE1 (MPI))

Check continuity between the relay terminals.

① – ⑤ . . . . . No continuity

(When battery voltage is applied between ② and ④)

① – ⑤ . . . . . Continuity

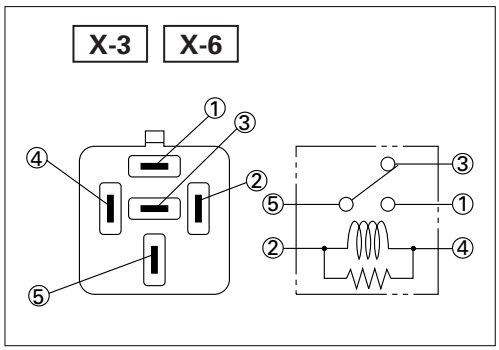

060RV005

Starter relay (Gasoline engine), Heater relay

Check continuity between the relay terminals.

① – ⑤ . . . . . No continuity

(When battery voltage is applied between ② and ④)

① – ⑤ . . . . . Continuity

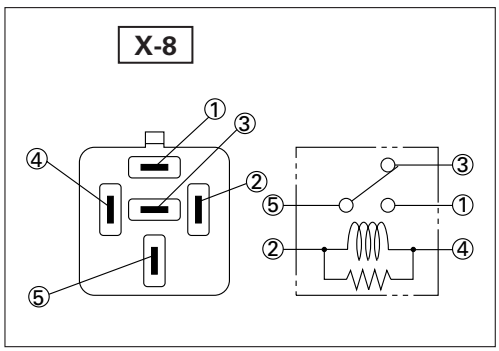

060RV005

St. cut relay

Check continuity between the relay terminals.

③ – ⑤ . . . . . Continuity

(When battery voltage is applied between ② and ④)

③ – ⑤ . . . . . No continuity

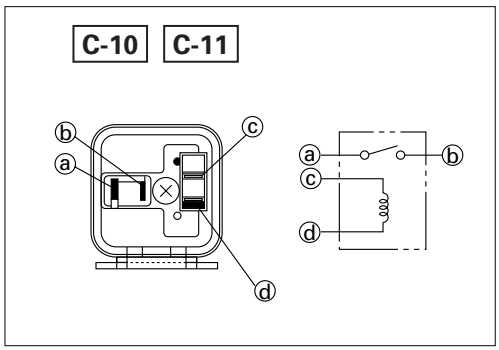

060RV006

Starter relay (Diesel engine)

Check continuity between the relay terminals.

ⓐ – ⓑ . . . . . No continuity

(When battery voltage is applied between ⓒ and ⓓ)

ⓐ – ⓑ . . . . . Continuity

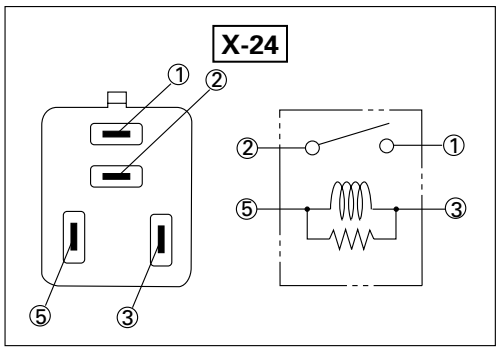

D08RW599

Starter relay (Gasoline engine 6VD1)

Check continuity between the relay terminals.

① – ②	Continuity

(When battery voltage is applied between ③ and ⑤)

① – ②	No continuity

ENGINE CONTROL MODULE (ECM) AND FUEL PUMP

PARTS LOCATION (LHD)

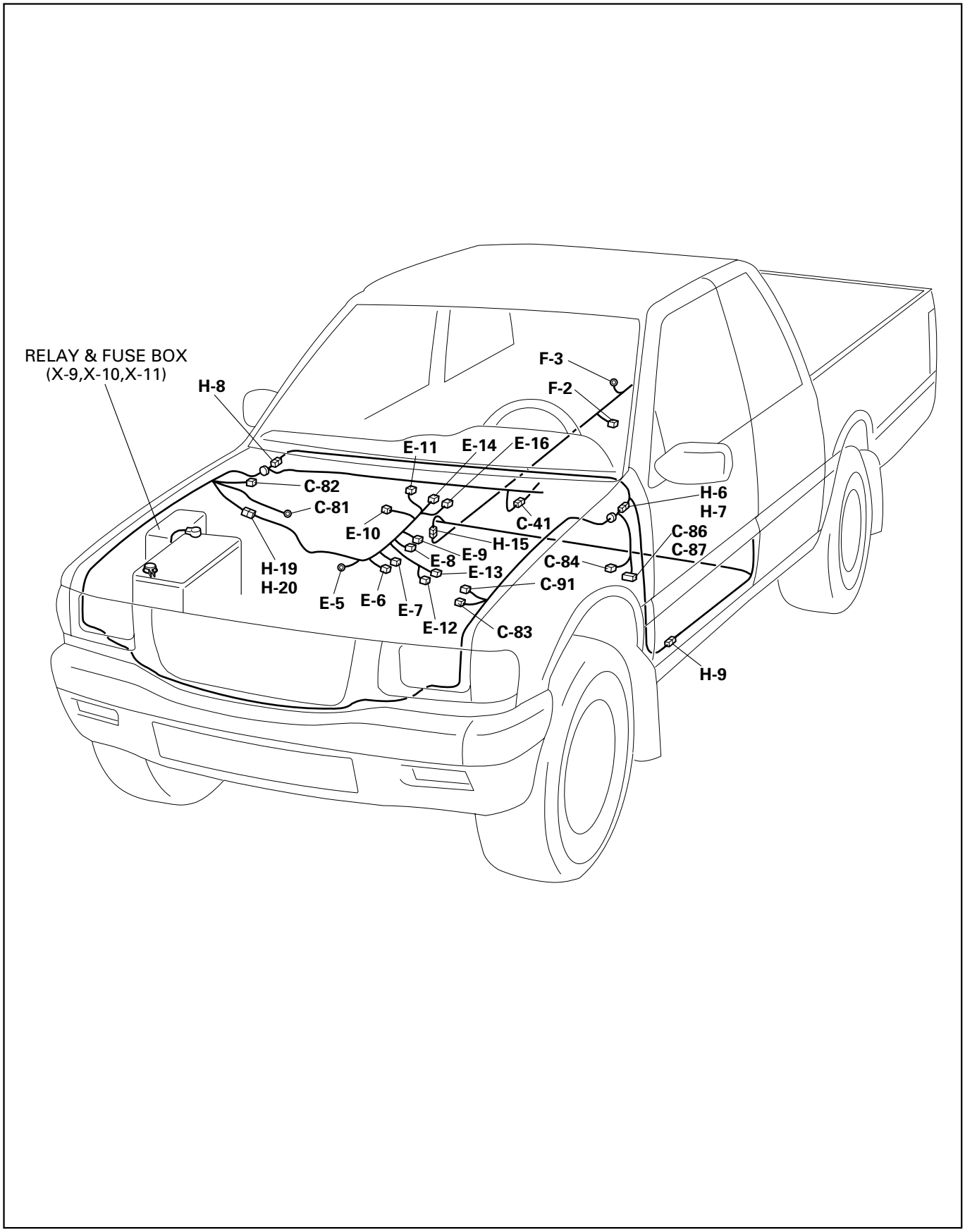

D08RVA21

PARTS LOCATION (6VD1-LHD)

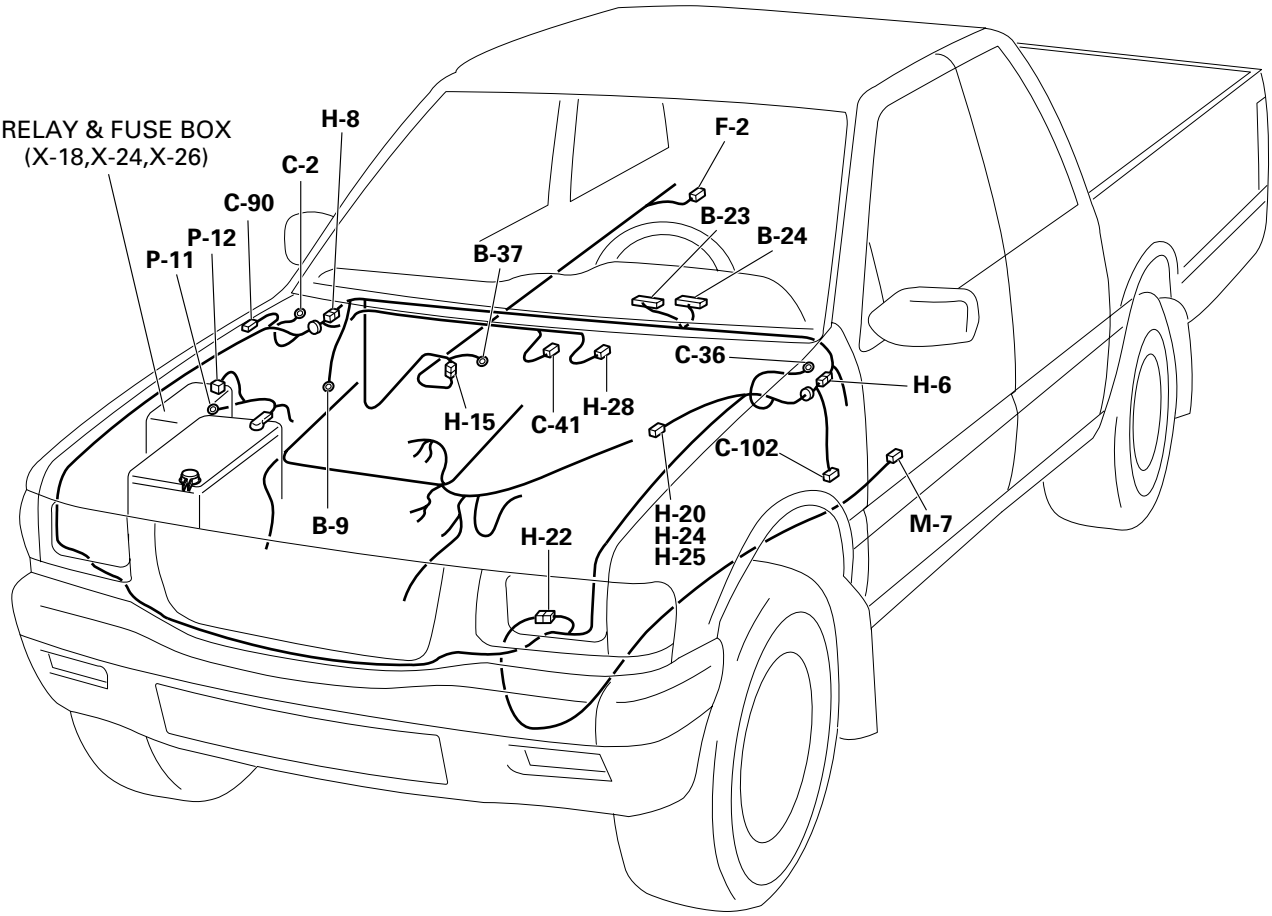

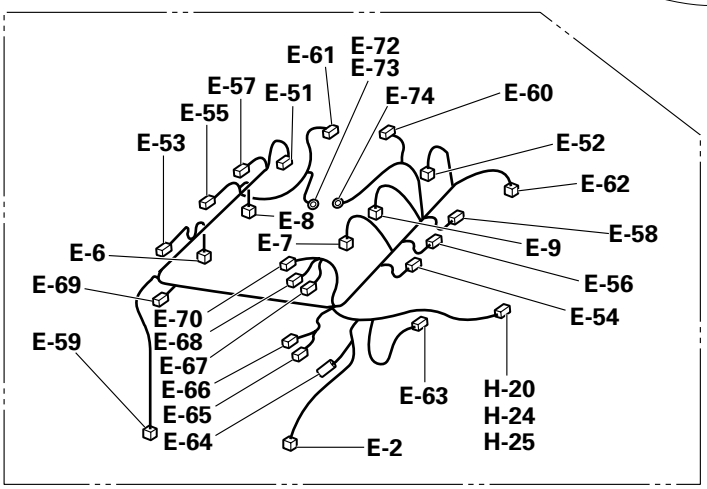

ENGINE HARNESS

D08RW550

PARTS LOCATION (RHD)

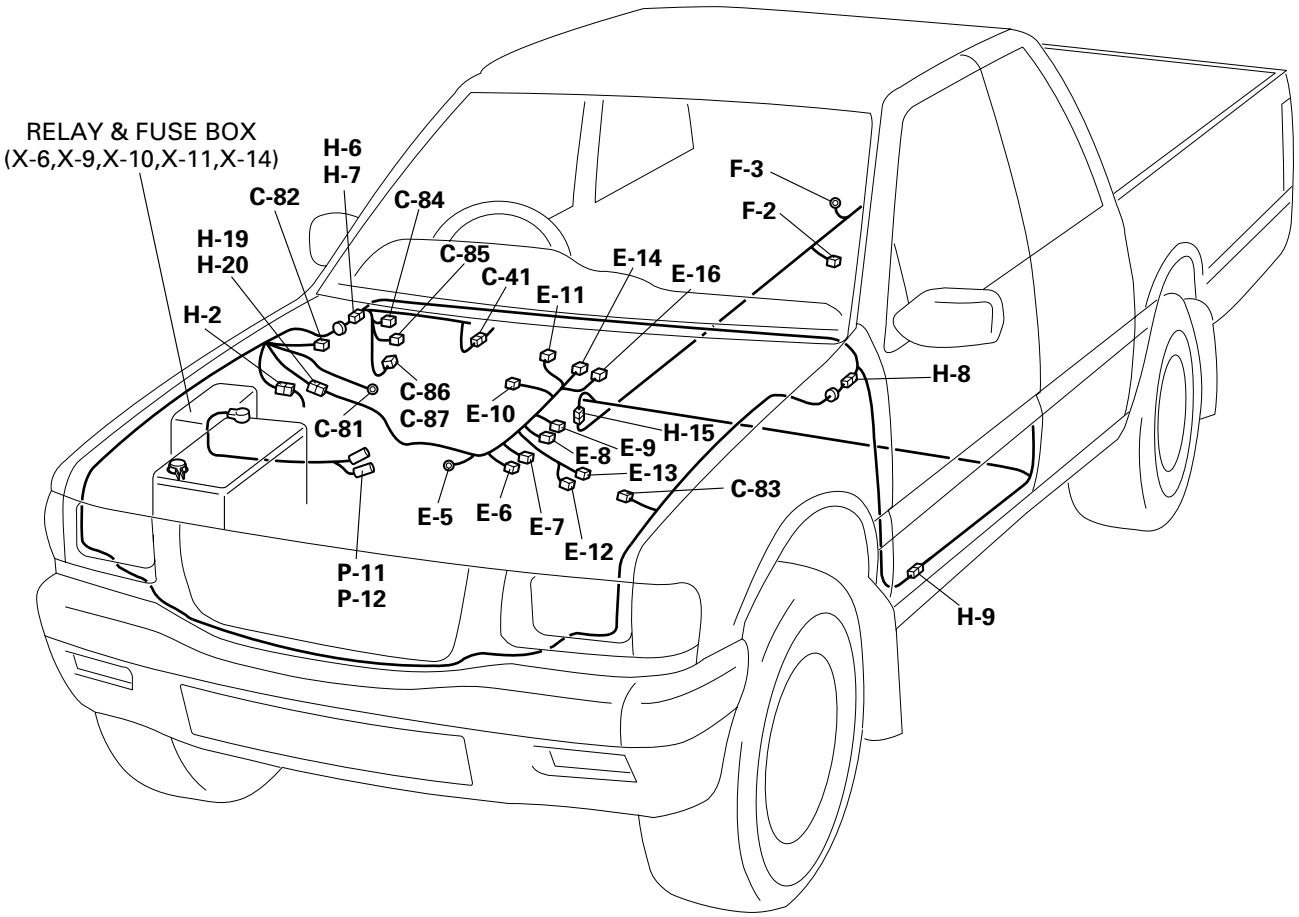

D08RVA22

PARTS LOCATION (6VD1-RHD)

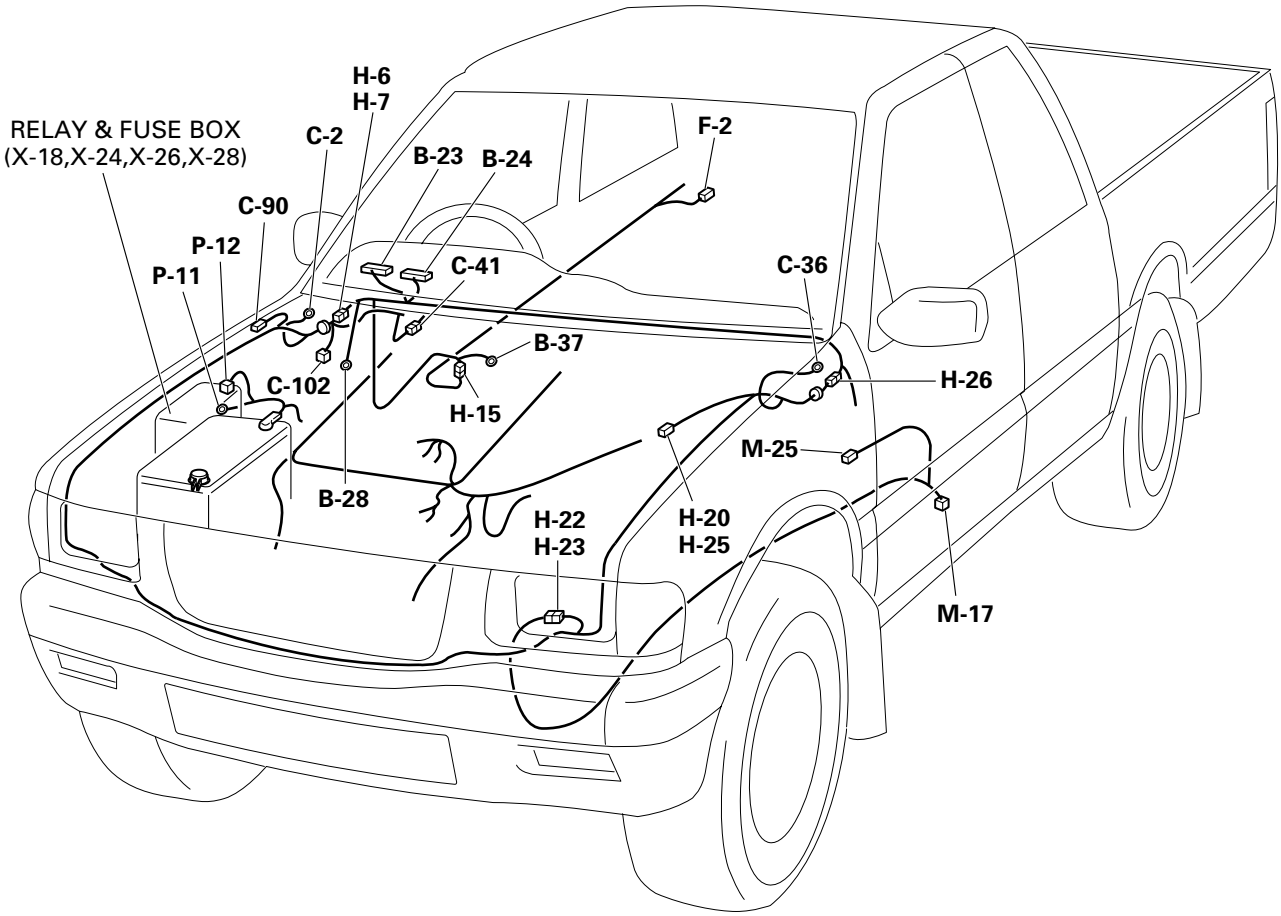

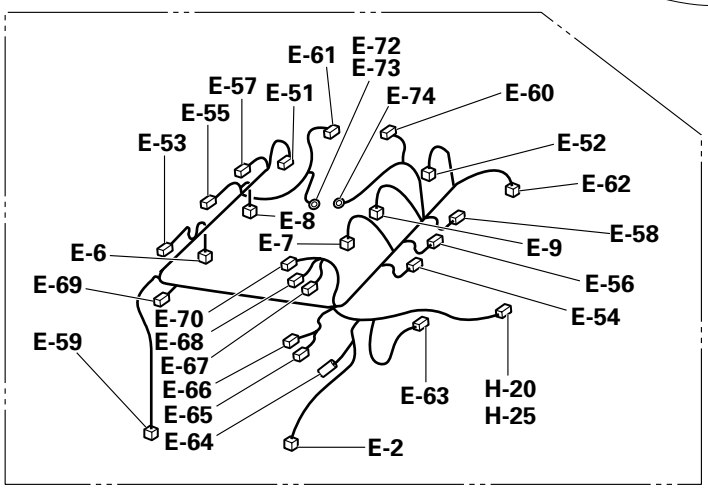

ENGINE HARNESS

D08RW551

CIRCUIT DIAGRAM (4ZD1 (MPI) GASOLINE ENGINE)

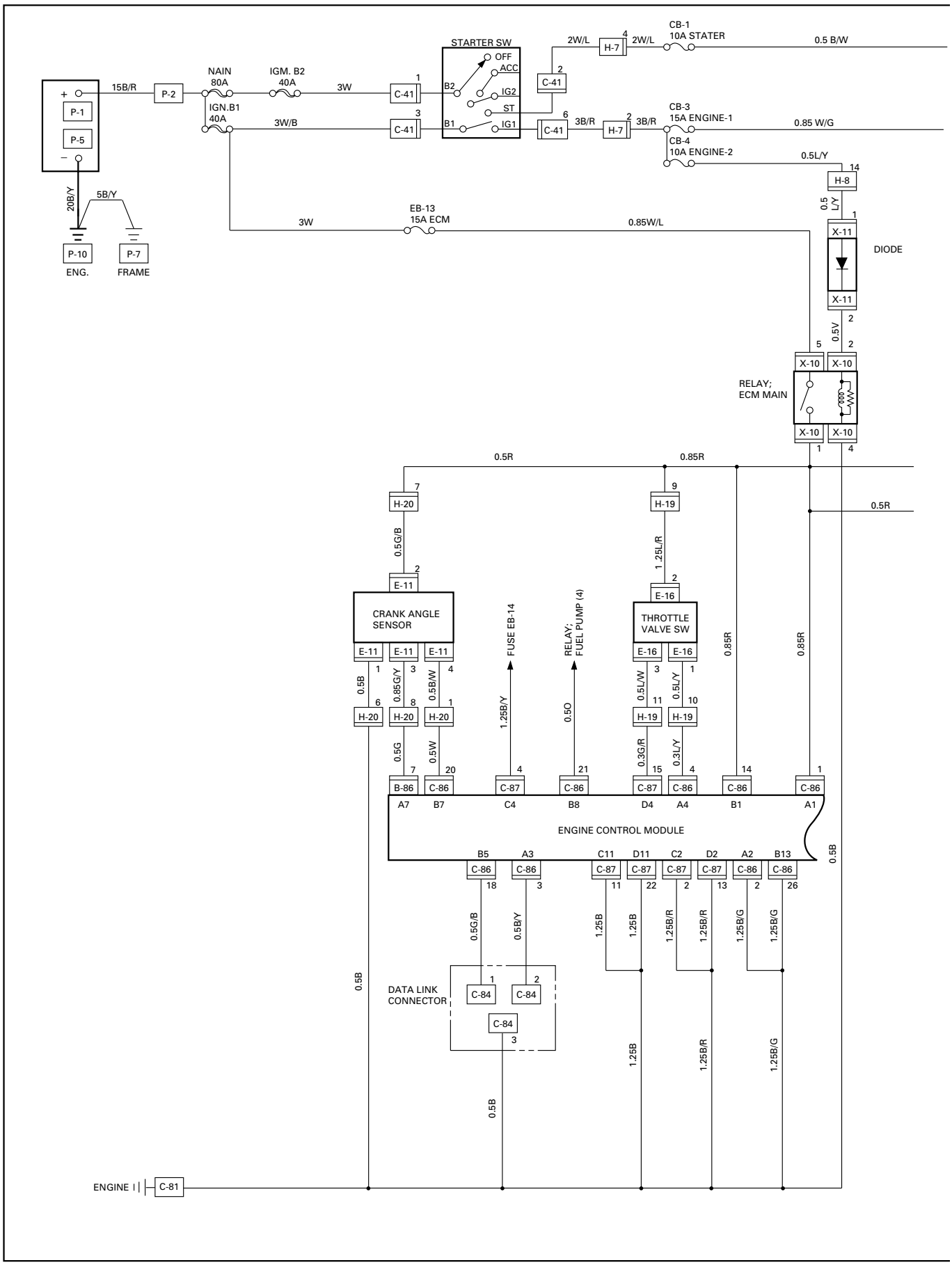

D08RV938

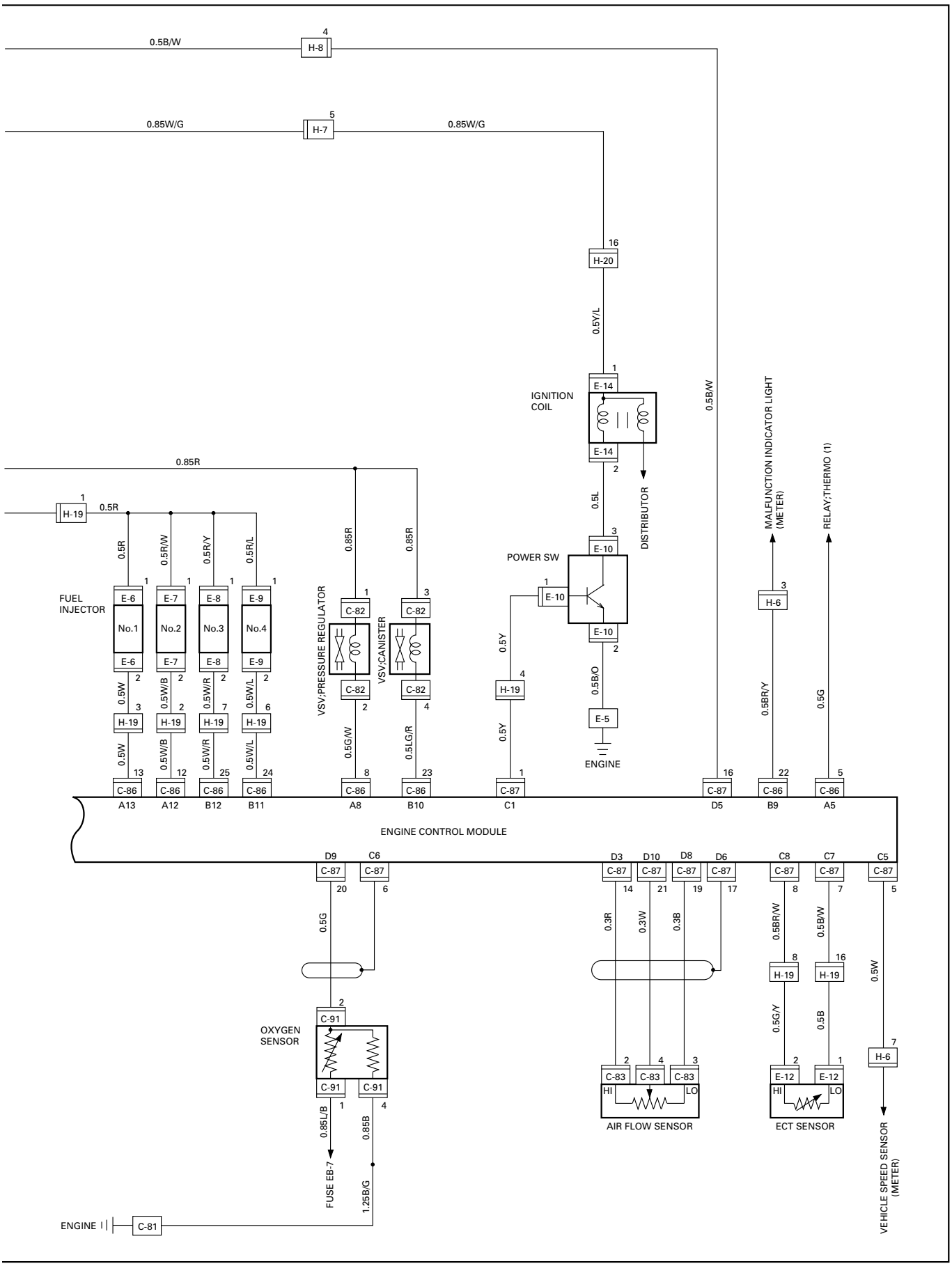
0.5B/W
H-8
0.85W/G
H-7
0.85W/G
H-20
0.5Y/L
E-14
IGNITION COIL
E-14
0.5B/W
MALFUNCTION INDICATOR LIGHT (METER)
RELAY;THERMO (1)
0.85R
H-19
0.5R
0.5L
E-10
DISTRIBUTOR
POWER SW
E-10
E-10
0.5R
0.5R/W
0.5R/Y
0.5R/L
0.85R
0.85R
FUEL INJECTOR
E-6
E-7
E-8
E-9
No.1
No.2
No.3
No.4
E-6
E-7
E-8
E-9
VSV;PRESSURE REGULATOR
C-82
C-82
VSV;CANISTER
C-82
C-82
H-6
0.5Y
H-19
0.5B/O
E-5
ENGINE
0.5BR/Y
0.5G
0.5W
0.5W/B
0.5W/R
0.5W/L
H-19
H-19
H-19
H-19
0.5W
0.5W/B
0.5W/R
0.5W/L
0.5G/W
0.5LG/R
0.5Y
C-86
C-86
C-86
C-86
C-86
C-86
C-87
C-87
C-86
C-86
A13
A12
B12
B11
A8
B10
C1
D5
B9
A5
ENGINE CONTROL MODULE
D9
C6
D3
D10
D8
D6
C8
C7
C5
C-87
C-87
C-87
C-87
C-87
C-87
C-87
C-87
C-87
20
6
14
21
19
17
8
7
5
0.5G
0.3R
0.3W
0.3B
0.5BR/W
0.5B/W
0.5W
H-19
H-19
0.5G/Y
0.5B
H-6
OXYGEN SENSOR
C-91
C-91
C-91
C-83
C-83
C-83
HI
LO
AIR FLOW SENSOR
E-12
E-12
HI
LO
ECT SENSOR
0.85L/B
0.85B
FUSE EB-7
1.25B/G
VEHICLE SPEED SENSOR (METER)
ENGINE
C-81

D08RV939

CIRCUIT DIAGRAM (4ZE1 (MPI) GASOLINE ENGINE)

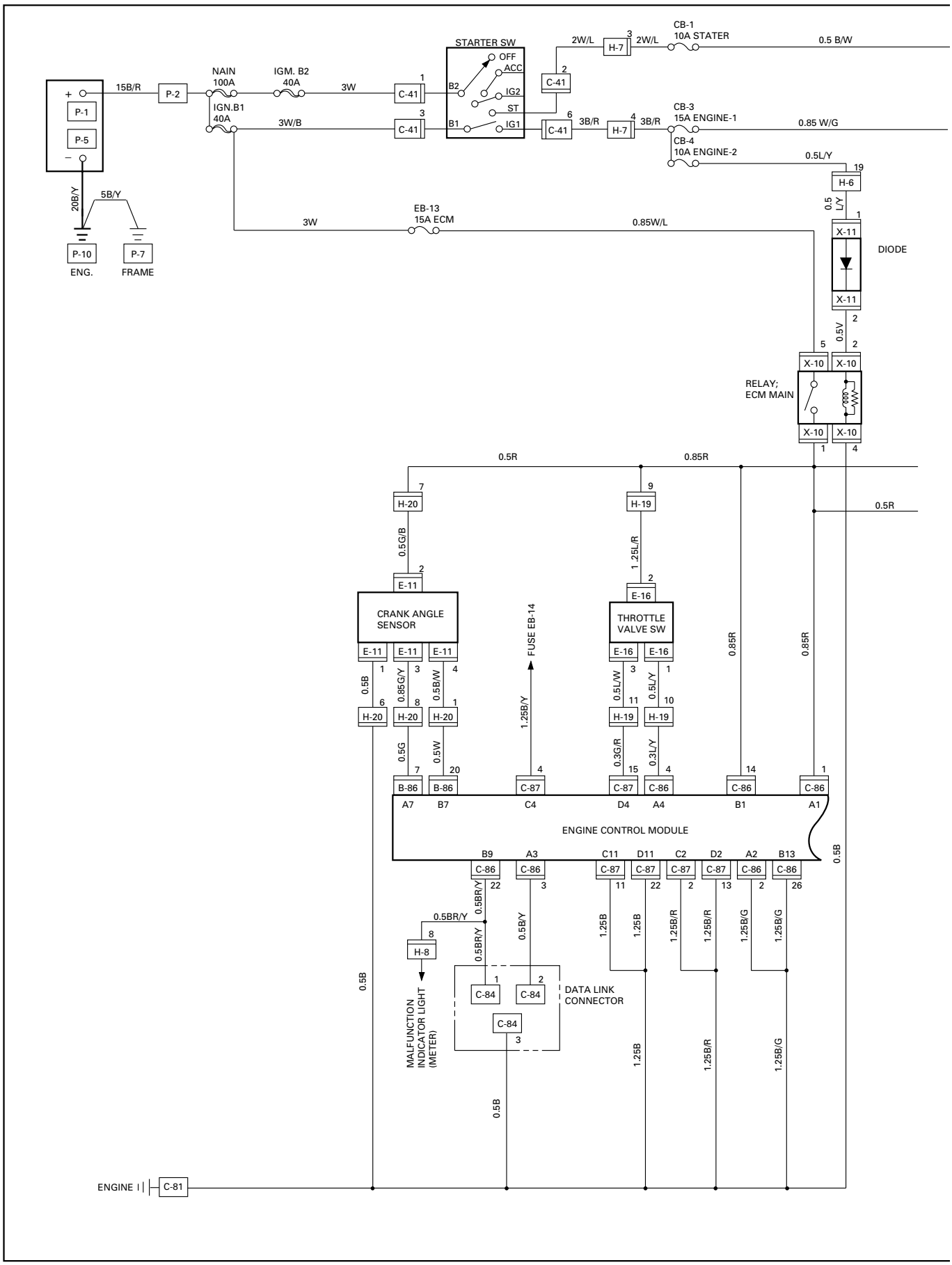

D08RV936

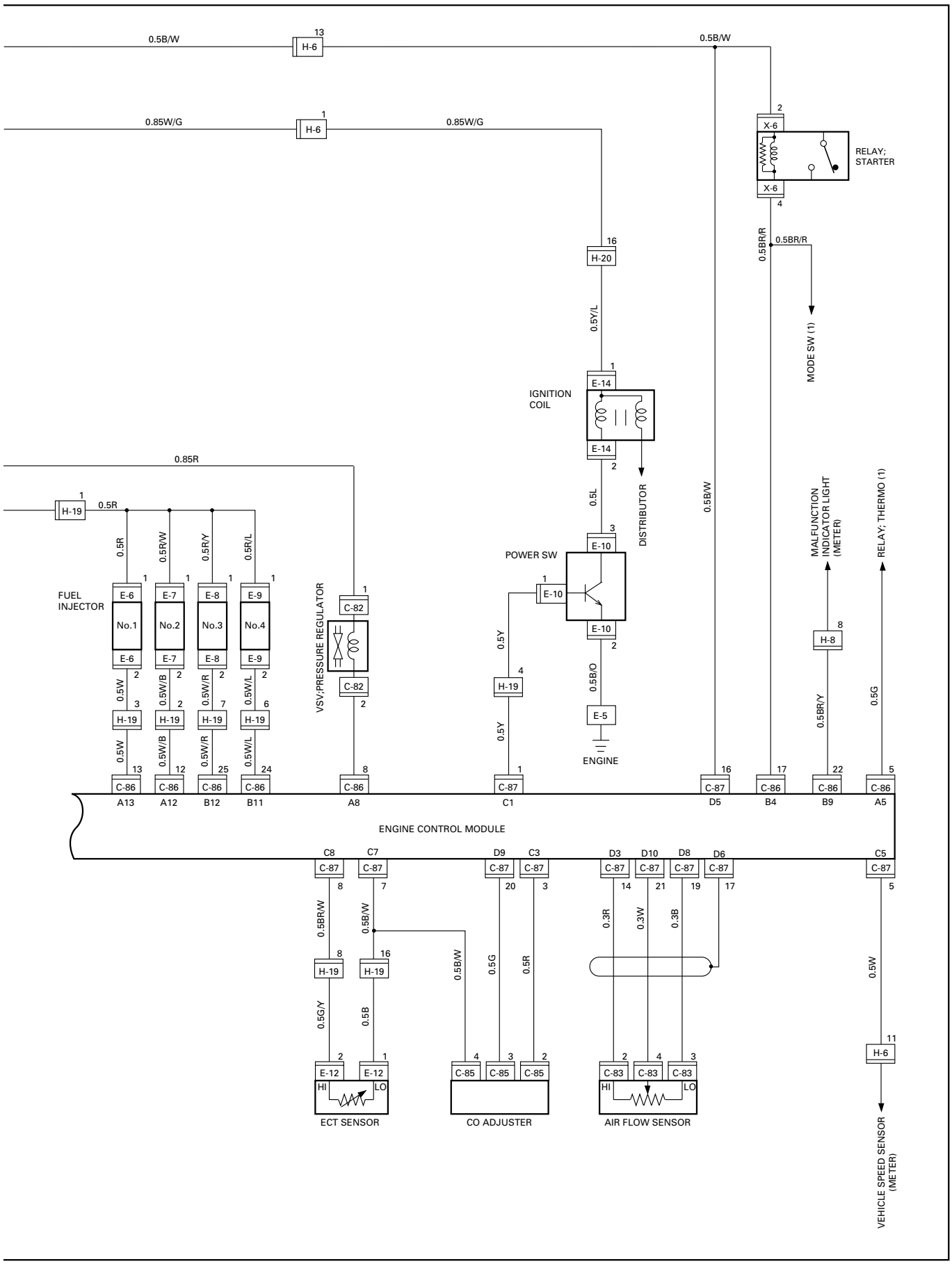
0.5B/W
H-6
13
0.5B/W
0.85W/G
H-6
1
0.85W/G
X-6
2
RELAY; STARTER
X-6
4
0.5BR/R
0.5BR/R
MODE SW (1)
H-20
16
0.5Y/L
E-14
1
IGNITION COIL
E-14
2
DISTRIBUTOR
0.5L
0.5B/W
0.85R
H-19
1
0.5R
0.5R
0.5R/W
0.5R/Y
0.5R/L
FUEL INJECTOR
E-6
E-7
E-8
E-9
No.1
No.2
No.3
No.4
E-6
E-7
E-8
E-9
0.5W
0.5W/B
0.5W/R
0.5W/L
H-19
H-19
H-19
H-19
0.5W
0.5W/B
0.5W/R
0.5W/L
C-86
C-86
C-86
C-86
A13
A12
B12
B11
VSV;PRESSURE REGULATOR
C-82
C-82
C-86
A8
POWER SW
E-10
E-10
E-10
0.5Y
H-19
0.5Y
C-87
C1
0.5B/O
E-5
ENGINE
C-87
D5
C-86
B4
MALFUNCTION INDICATOR LIGHT (METER)
H-8
0.5BR/Y
C-86
B9
RELAY; THERMO (1)
0.5G
C-86
A5
ENGINE CONTROL MODULE
C8
C7
D9
C3
D3
D10
D8
D6
C5
C-87
C-87
C-87
C-87
C-87
C-87
C-87
C-87
C-87
0.5BR/W
0.5B/W
0.5B/W
0.5G
0.5R
0.3R
0.3W
0.3B
0.5W
H-19
H-19
H-6
0.5G/Y
0.5B
E-12
E-12
HI
LO
C-85
C-85
C-85
C-83
C-83
C-83
HI
LO
ECT SENSOR
CO ADJUSTER
AIR FLOW SENSOR
VEHICLE SPEED SENSOR (METER)

D08RV937

CIRCUIT DIAGRAM (4ZD1 (MPI) GASOLINE ENGINE)

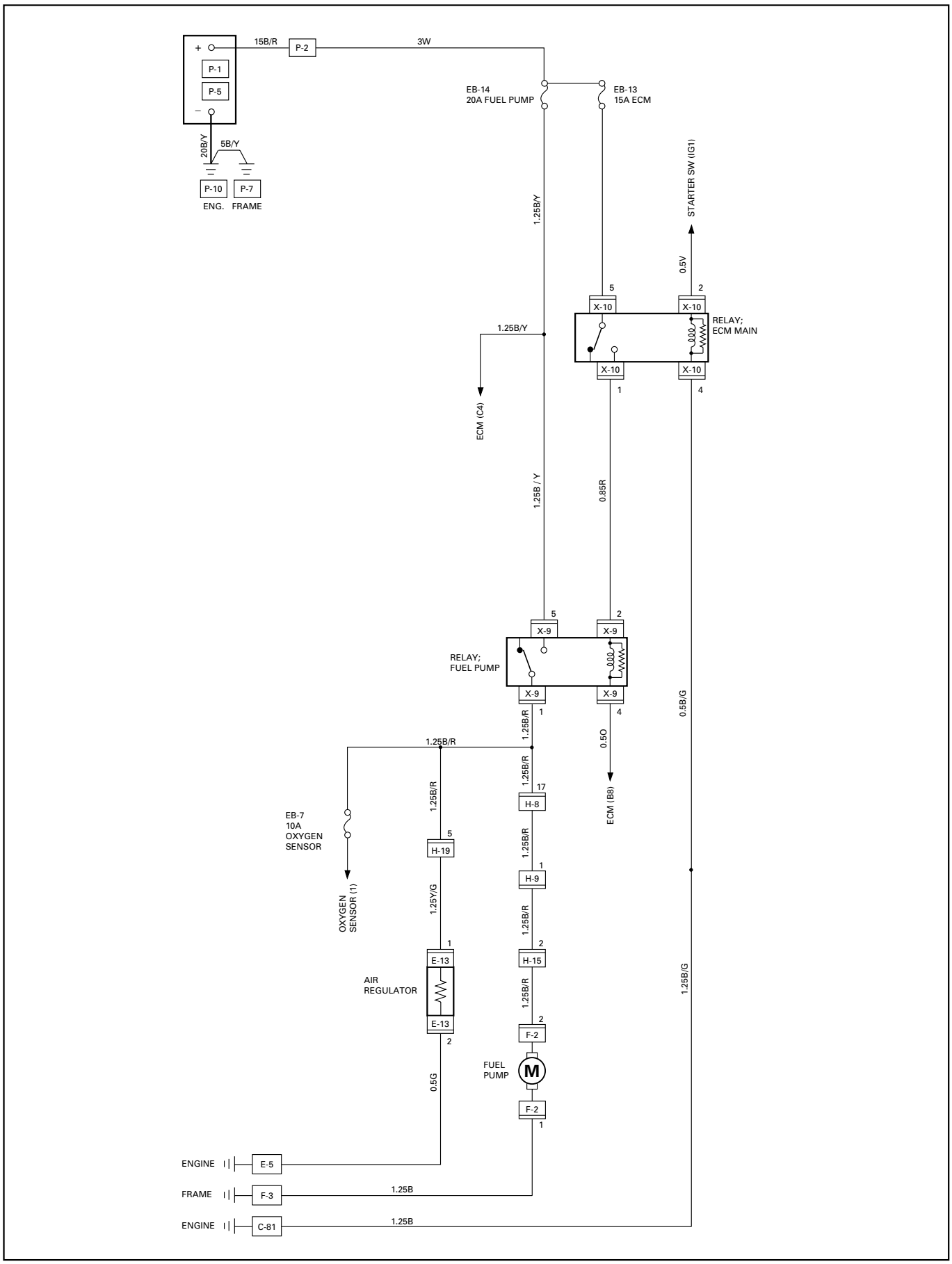

D08RV940

CIRCUIT DIAGRAM (4ZE1 (MPI) GASOLINE ENGINE)

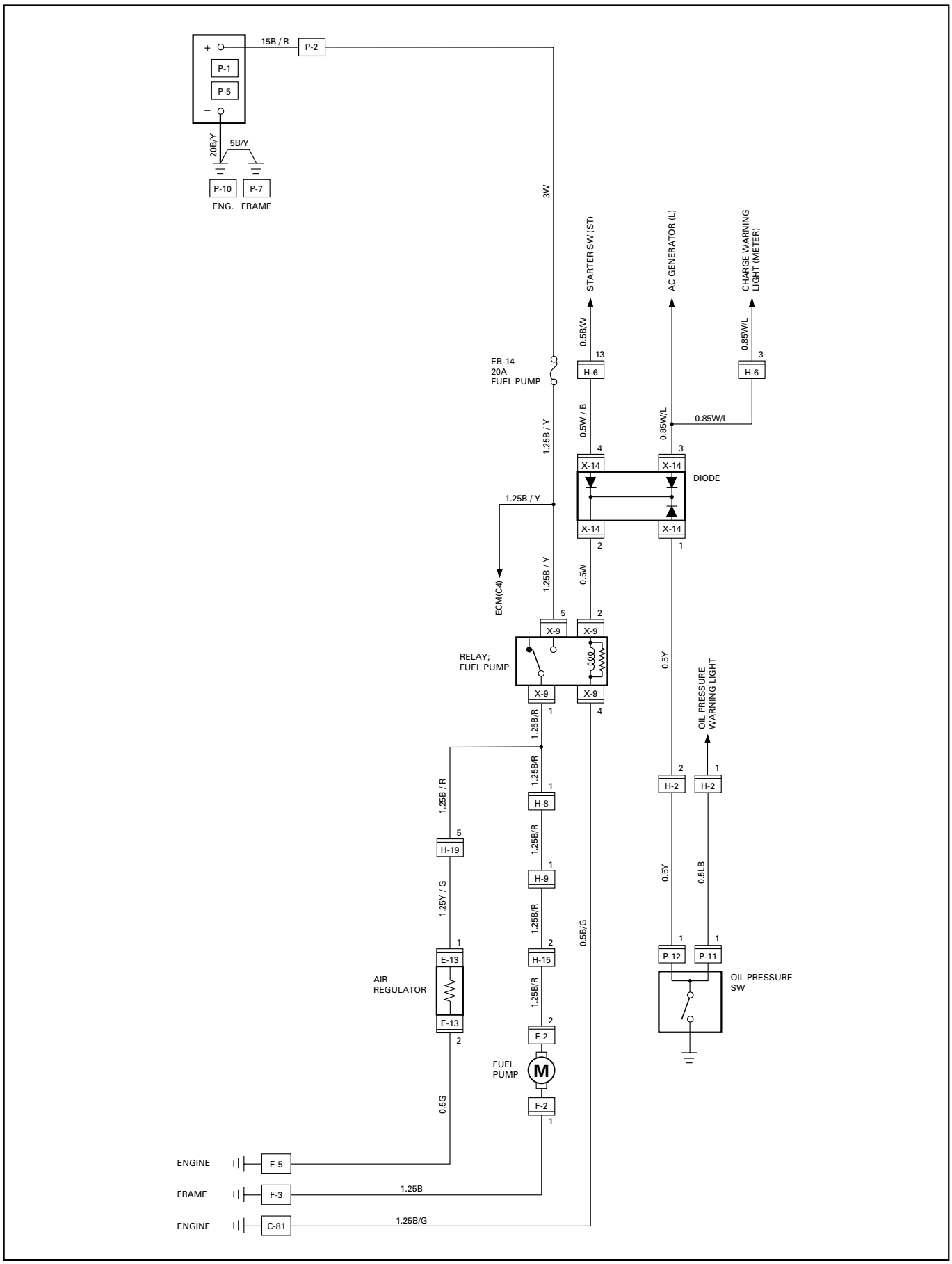

D08RV930

CIRCUIT DIAGRAM (6VD1 GASOLINE ENGINE-LHD)

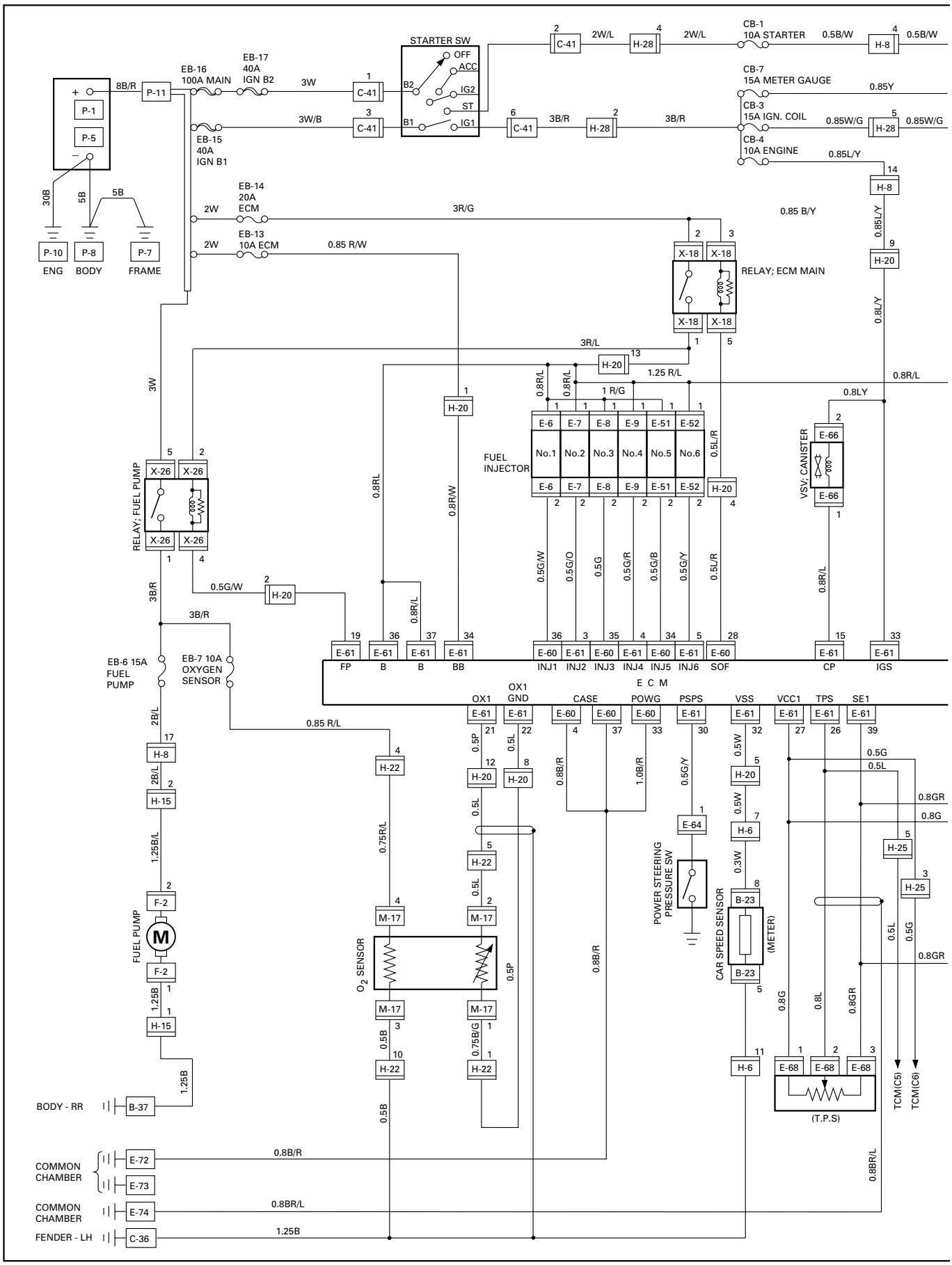

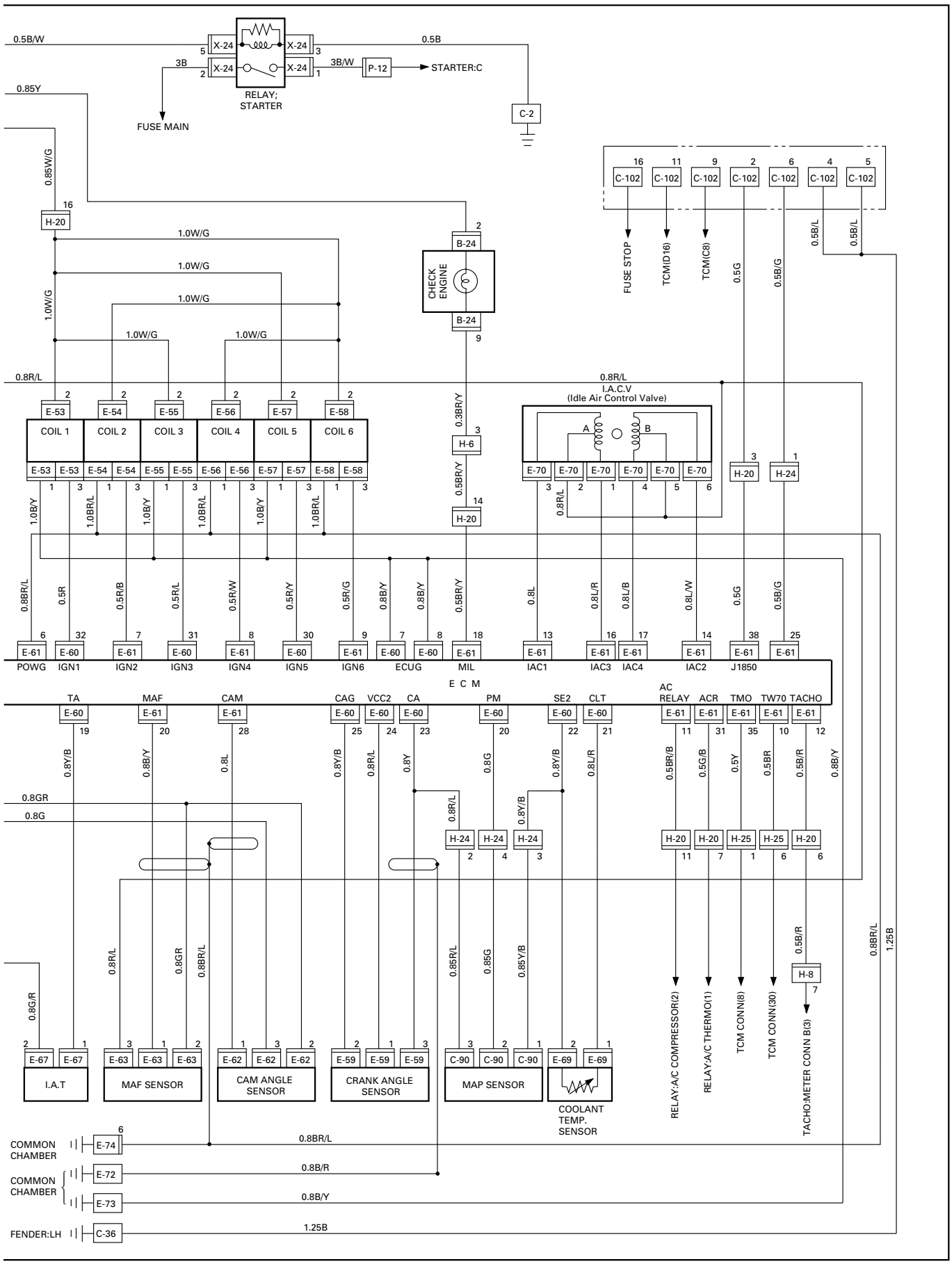
RELAY; STARTER
FUSE MAIN
STARTER:C
CHECK ENGINE
I.A.C.V (Idle Air Control Valve)
COIL 1
COIL 2
COIL 3
COIL 4
COIL 5
COIL 6
FUSE STOP
TCM(D16)
TCM(C8)
E C M
POWG
IGN1
IGN2
IGN3
IGN4
IGN5
IGN6
ECUG
MIL
IAC1
IAC3
IAC4
IAC2
J1850
TA
MAF
CAM
CAG
VCC2
CA
PM
SE2
CLT
AC RELAY
ACR
TMO
TW70
TACHO
I.A.T
MAF SENSOR
CAM ANGLE SENSOR
CRANK ANGLE SENSOR
MAP SENSOR
COOLANT TEMP. SENSOR
RELAY:A/C COMPRESSOR(2)
RELAY:A/C THERMO(1)
TCM CONN(8)
TCM CONN(30)
TACHO:METER CONN B(3)
COMMON CHAMBER
FENDER:LH

D08RW531

CIRCUIT DIAGRAM (6VD1 GASOLINE ENGINE-RHD)

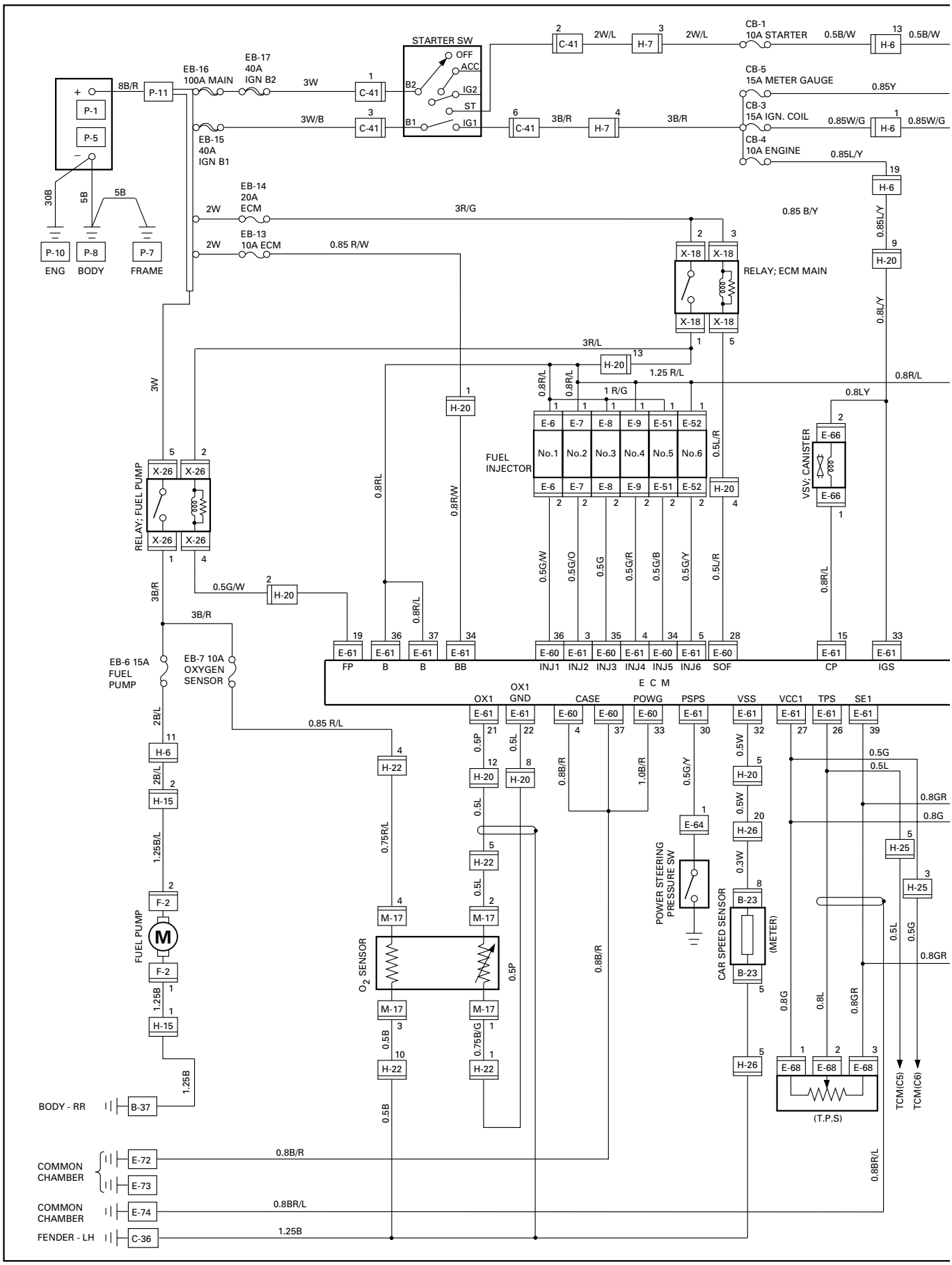

d08RW529

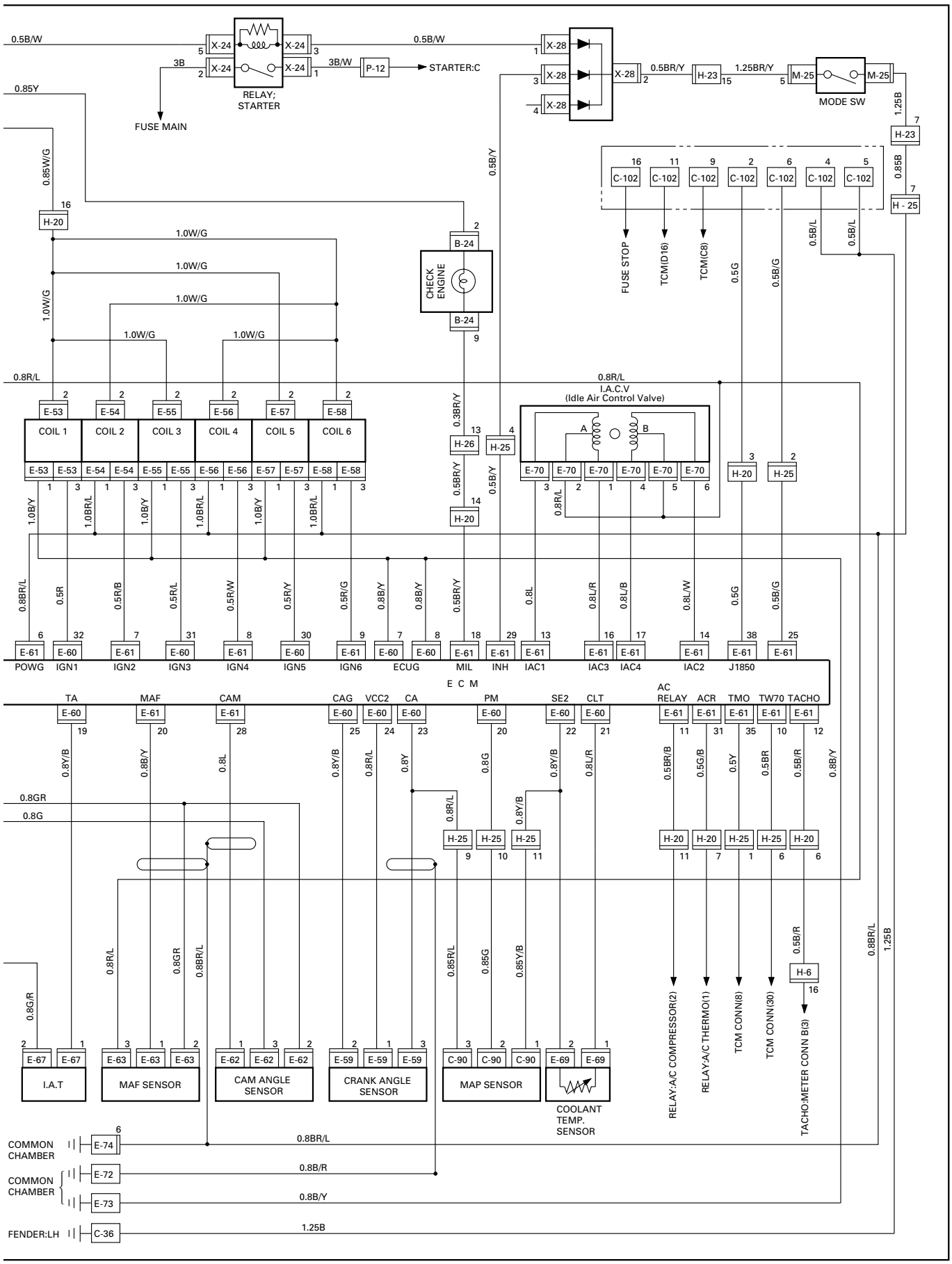
RELAY; STARTER
FUSE MAIN
STARTER:C
MODE SW
CHECK ENGINE
FUSE STOP
TCM(D16)
TCM(C9)
I.A.C.V
(Idle Air Control Valve)
COIL 1
COIL 2
COIL 3
COIL 4
COIL 5
COIL 6
E C M
POWG
IGN1
IGN2
IGN3
IGN4
IGN5
IGN6
ECUG
MIL
INH
IAC1
IAC3
IAC4
IAC2
J1850
TA
MAF
CAM
CAG
VCC2
CA
PM
SE2
CLT
AC RELAY
ACR
TMO
TW70
TACHO
I.A.T
MAF SENSOR
CAM ANGLE SENSOR
CRANK ANGLE SENSOR
MAP SENSOR
COOLANT TEMP. SENSOR
RELAY:A/C COMPRESSOR(2)
RELAY:A/C THERMO(1)
TCM CONN(8)
TCM CONN(30)
TACHO:METER CONN B(3)
COMMON CHAMBER
COMMON CHAMBER
FENDER:LH
D08RW530

REMOVAL AND INSTALLATION

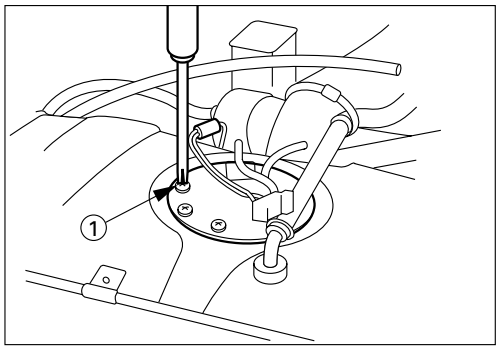

042RV002

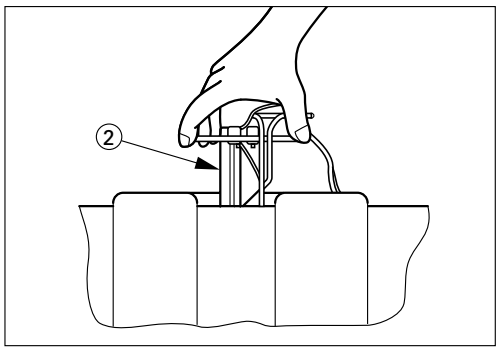

042RV001

FUEL PUMP

Removal

1. Remove the fuel tank.
   Refer to the "ENGINE" Section of this Manual.
2. Loosen the screws ①.
3. Raise the fuel pump assembly ② from the fuel tank.

Installation

Follow the removal procedure in the reverse order to install the fuel pump.

Pay close attention to the important points mentioned in the following paragraphs.

Rubber Seal

Be absolutely sure that the fuel pump rubber seal is correctly seated.

Connector

Be absolutely sure that the fuel pump connector is securely connected.

This will prevent a poor contact and an open circuit.

INSPECTION AND REPAIR

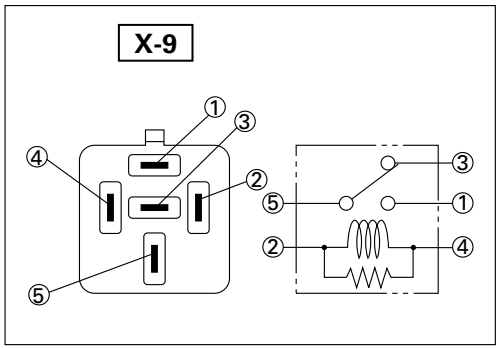

060RV005

Fuel pump relay

Check continuity between the relay terminals.

① – ⑤	No continuity

(When battery voltage is applied between ② and ④)

① – ⑤	Continuity

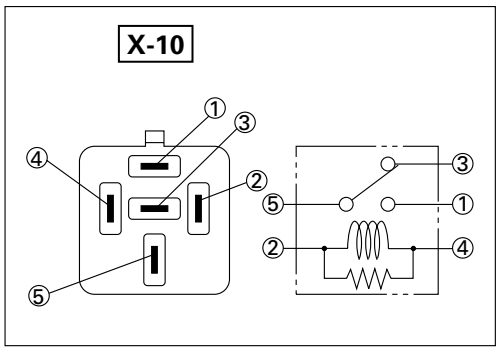

060RV005

ECM main relay

Check continuity between the relay terminals.

① – ⑤	No continuity

(When battery voltage is applied between ② and ④)

① – ⑤	Continuity

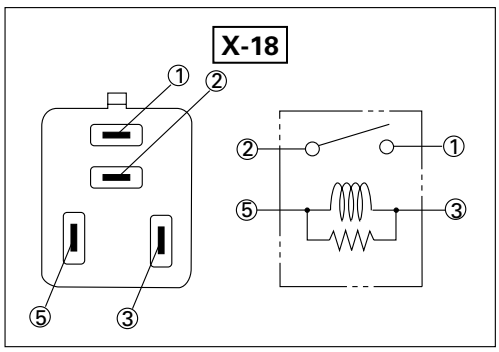

D08RW599

ECM main relay

Check continuity between the relay terminals.

① – ②	No continuity

(When battery voltage is applied between ③ and ⑤)

① – ②	Continuity

EMISSION CONTROL SYSTEM

PARTS LOCATION (LHD)

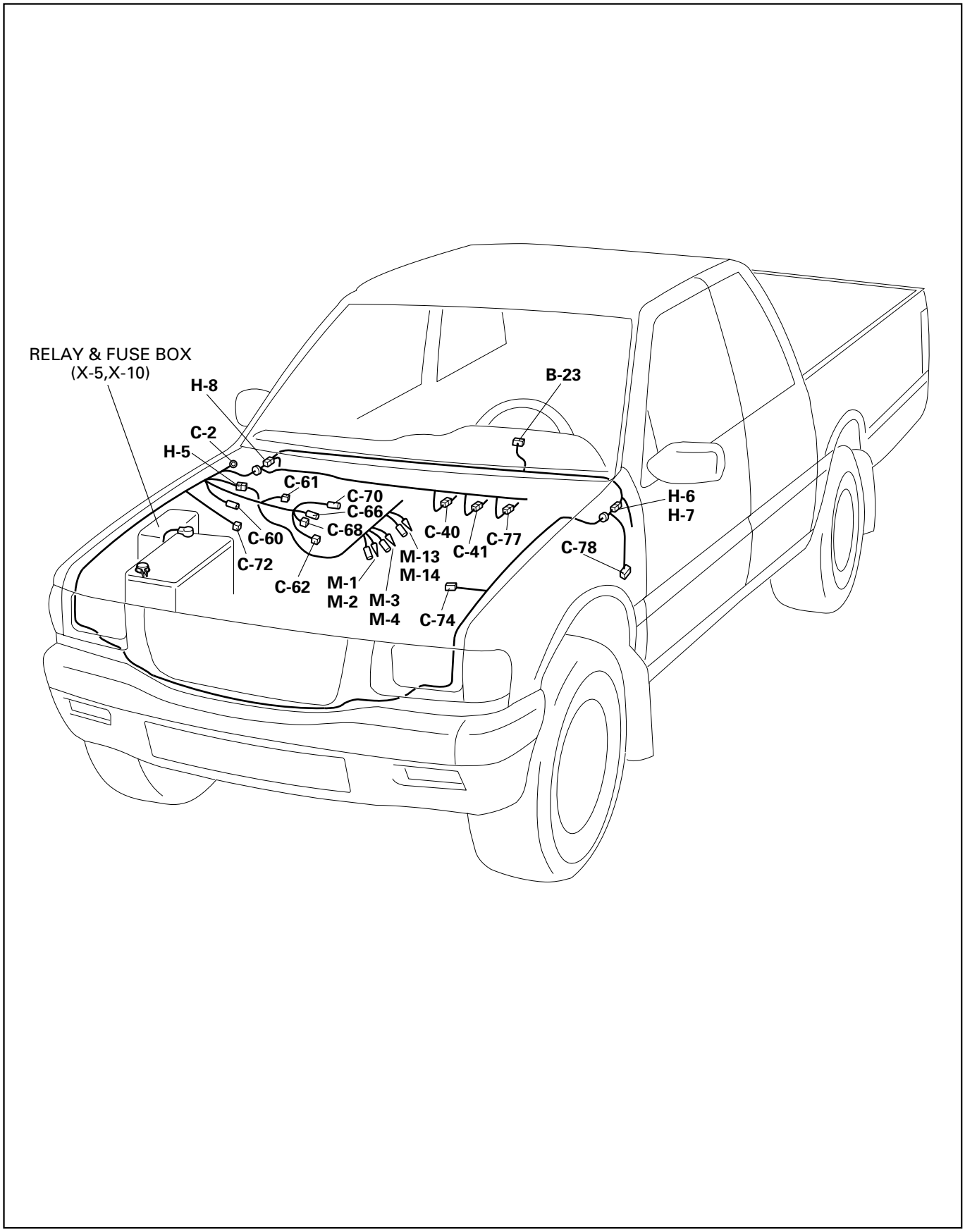

PARTS LOCATION (RHD)

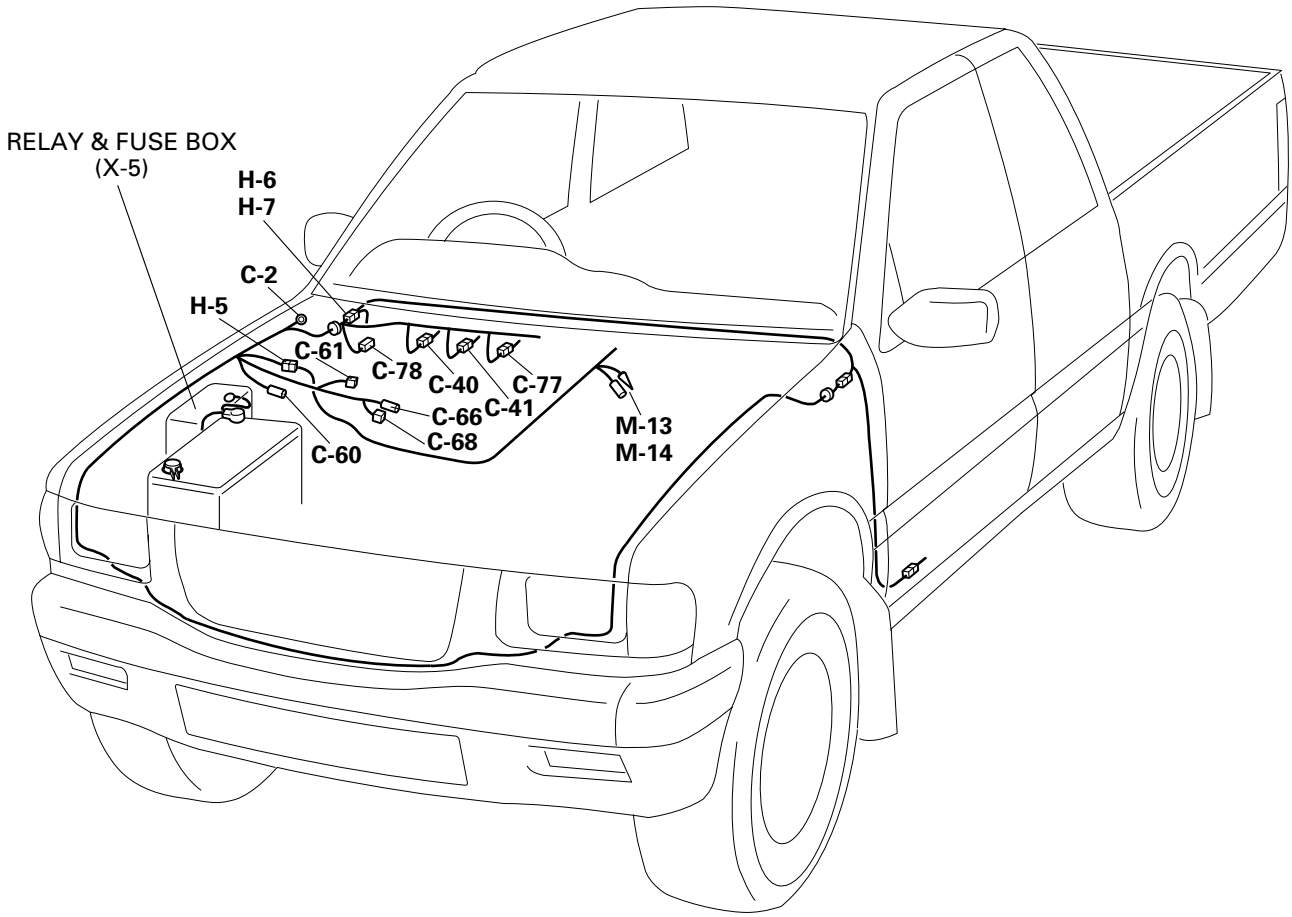

D08RVA24

CIRCUIT DIAGRAM (GASOLINE ENGINE W/O EFE HEATER)

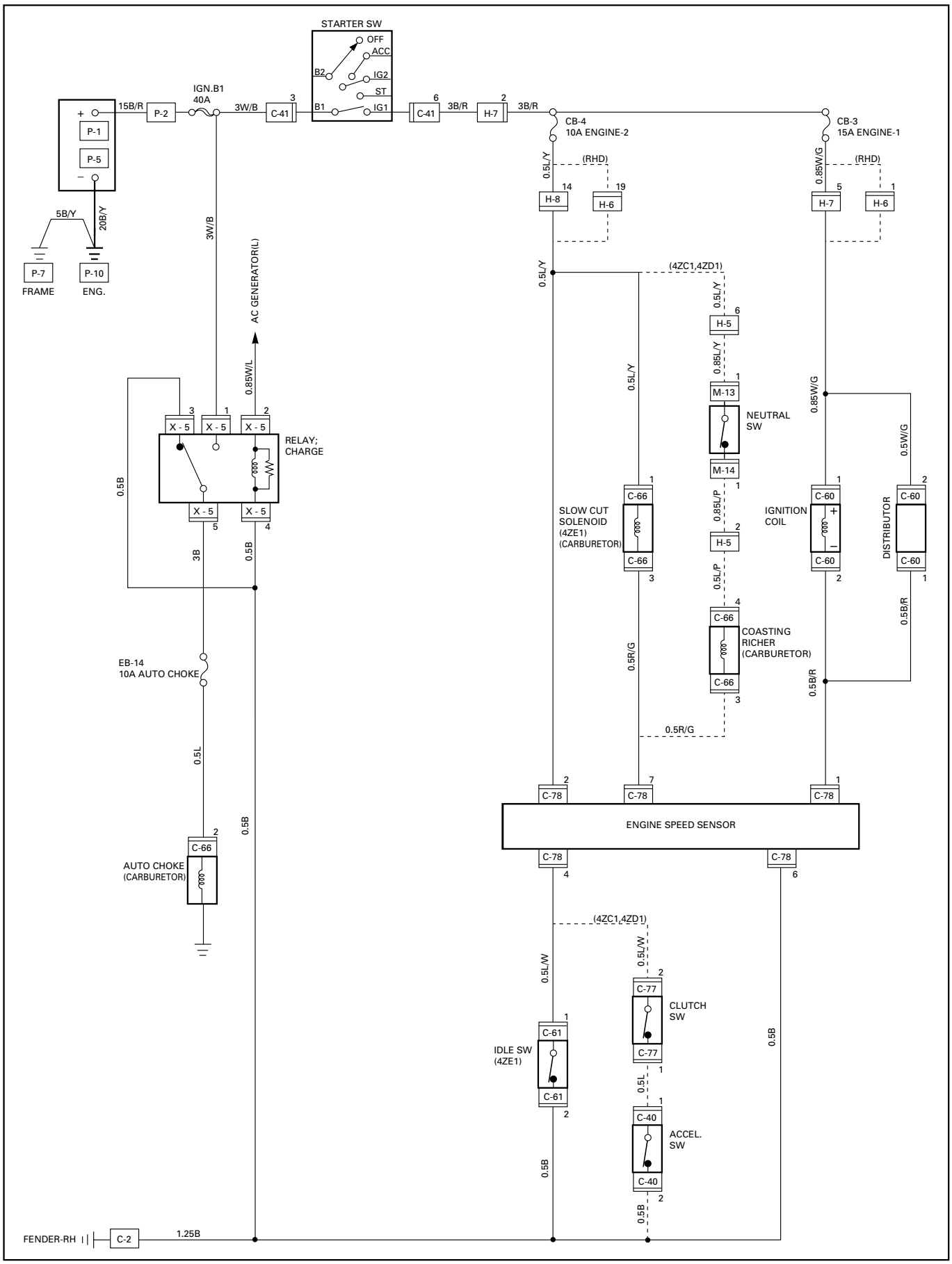

D08RV941

CIRCUIT DIAGRAM (GASOLINE ENGINE W/ EFE HEATER)

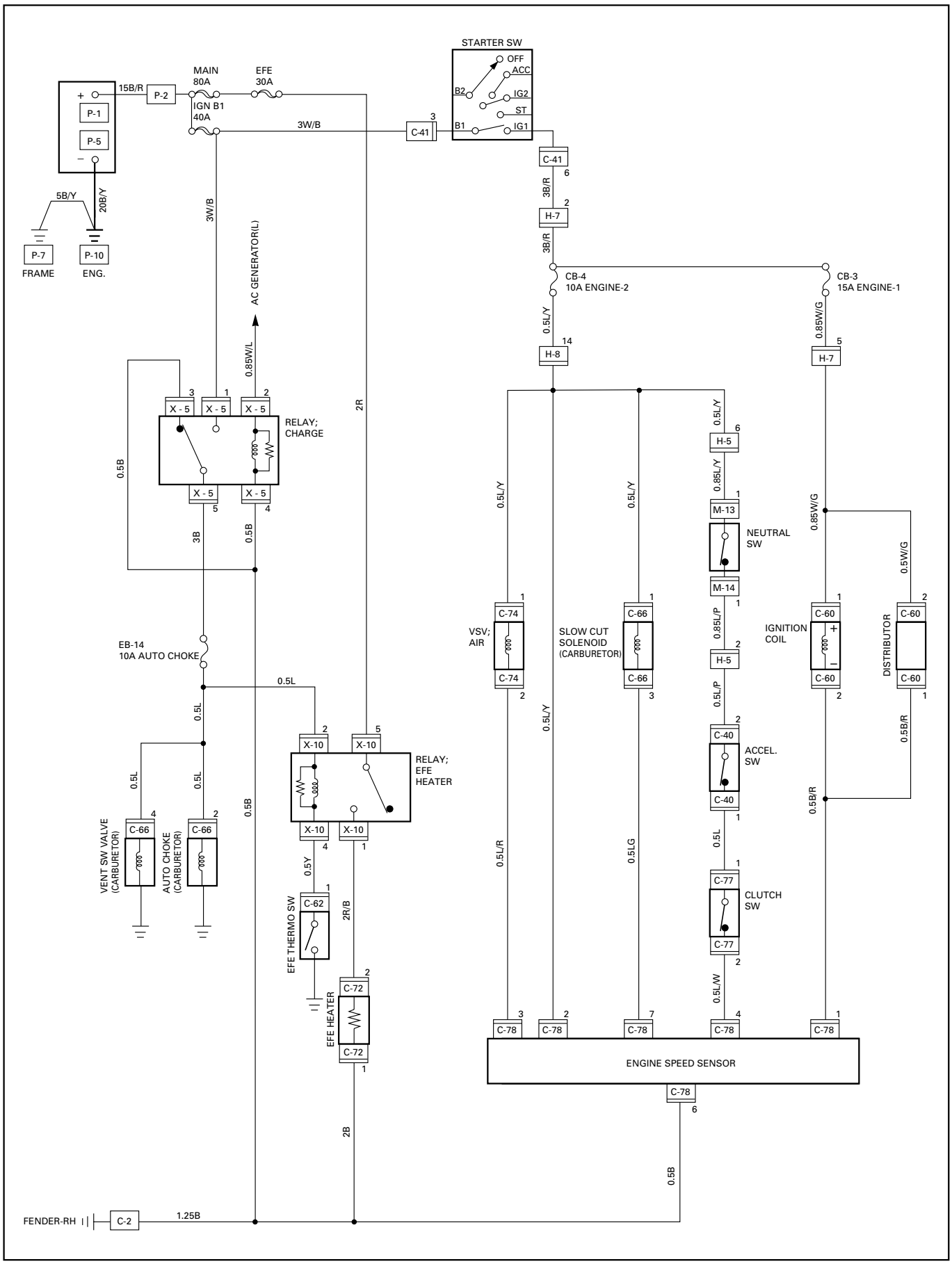

D08RV943

CIRCUIT DIAGRAM (4ZD1 GASOLINE ENGINE – SAUDI ARABIA)

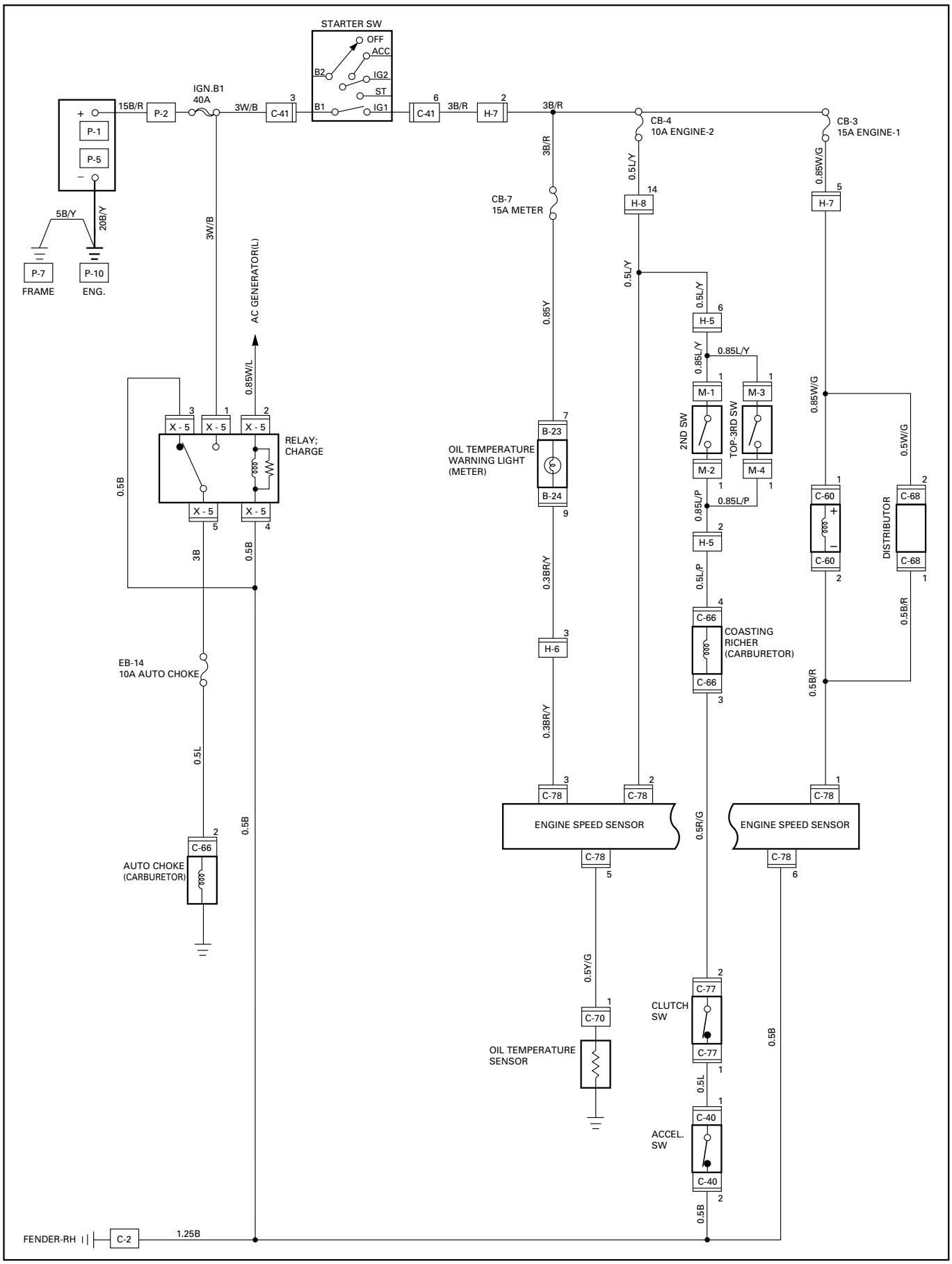

INSPECTION AND REPAIR

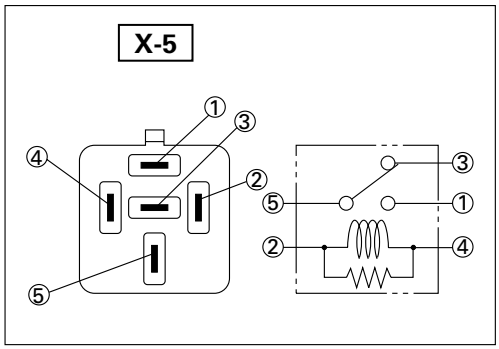

060RV005

Charge relay

Check continuity between the relay terminals.

③ – ⑤	Continuity
① – ⑤	No continuity

(When battery voltage is applied between ② and ④)

③ – ⑤	No continuity
① – ⑤	Continuity

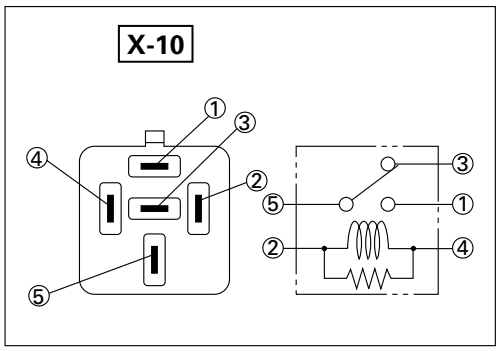

060RV005

EFE heater relay

Check continuity between the relay terminals.

① – ⑤	No continuity

(When battery voltage is applied between ② and ④)

① – ⑤	Continuity

QOS SYSTEM

PARTS LOCATION (LHD)

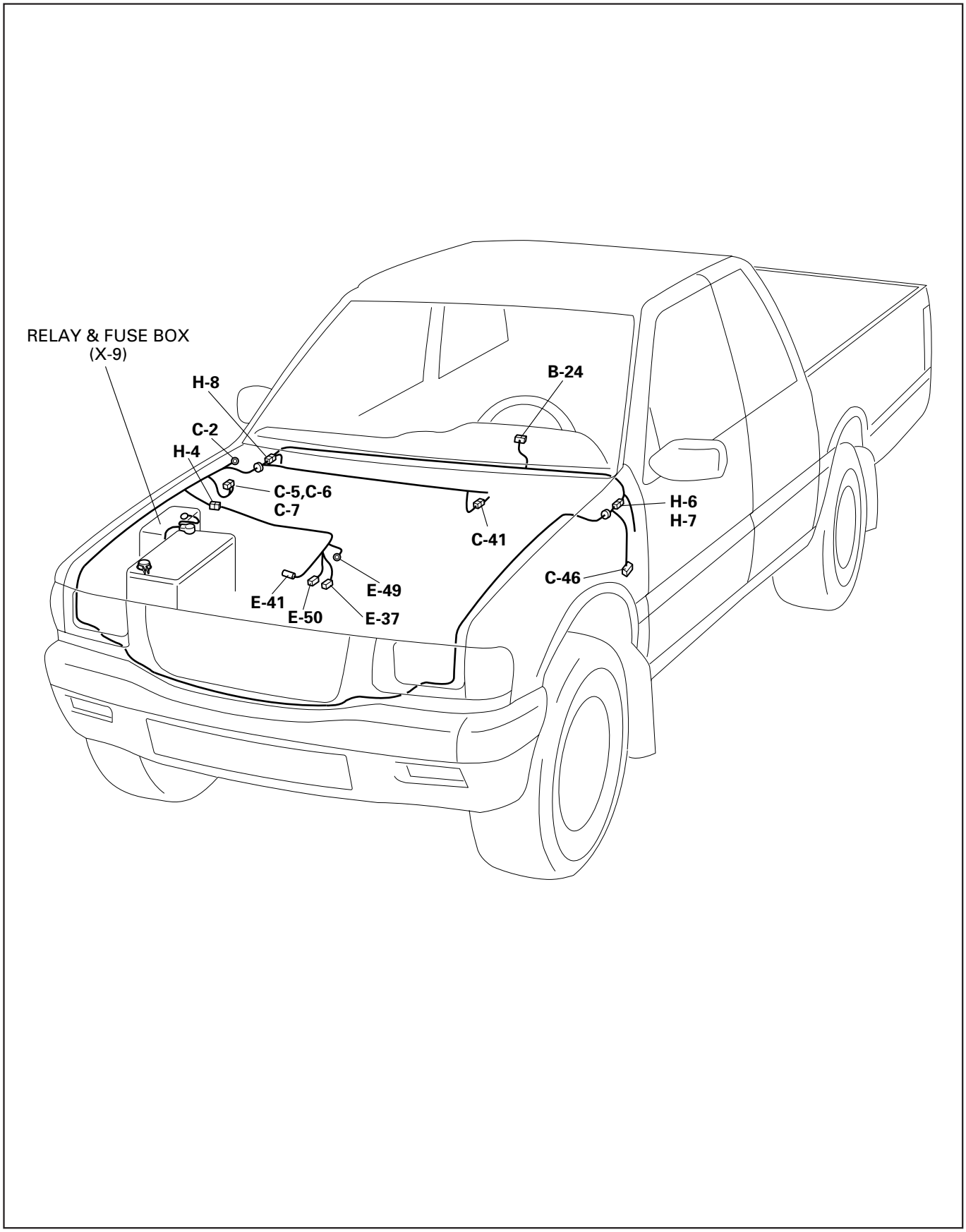

D08RVA25

PARTS LOCATION (RHD)

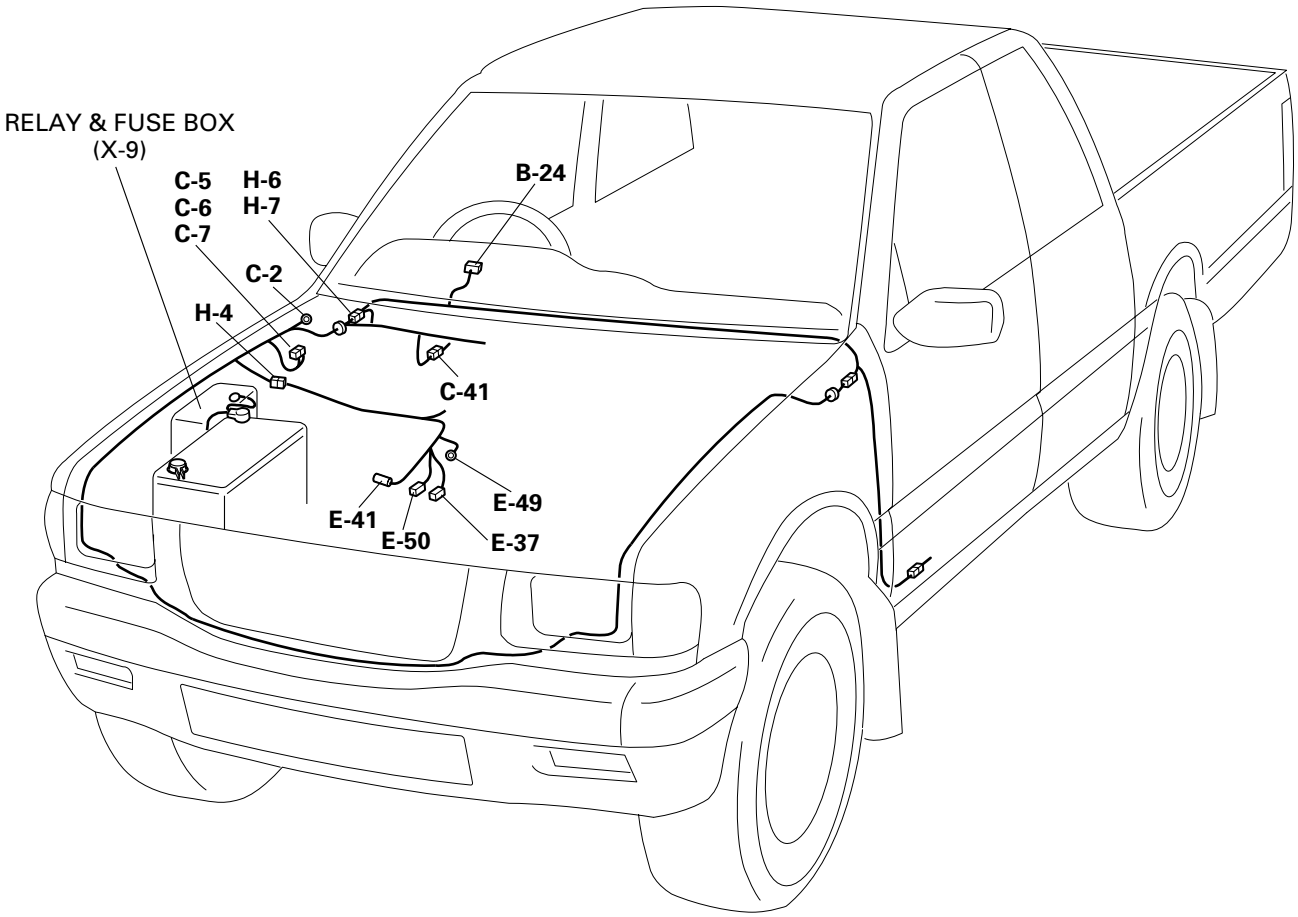

D08RVA26

CIRCUIT DIAGRAM (LHD)

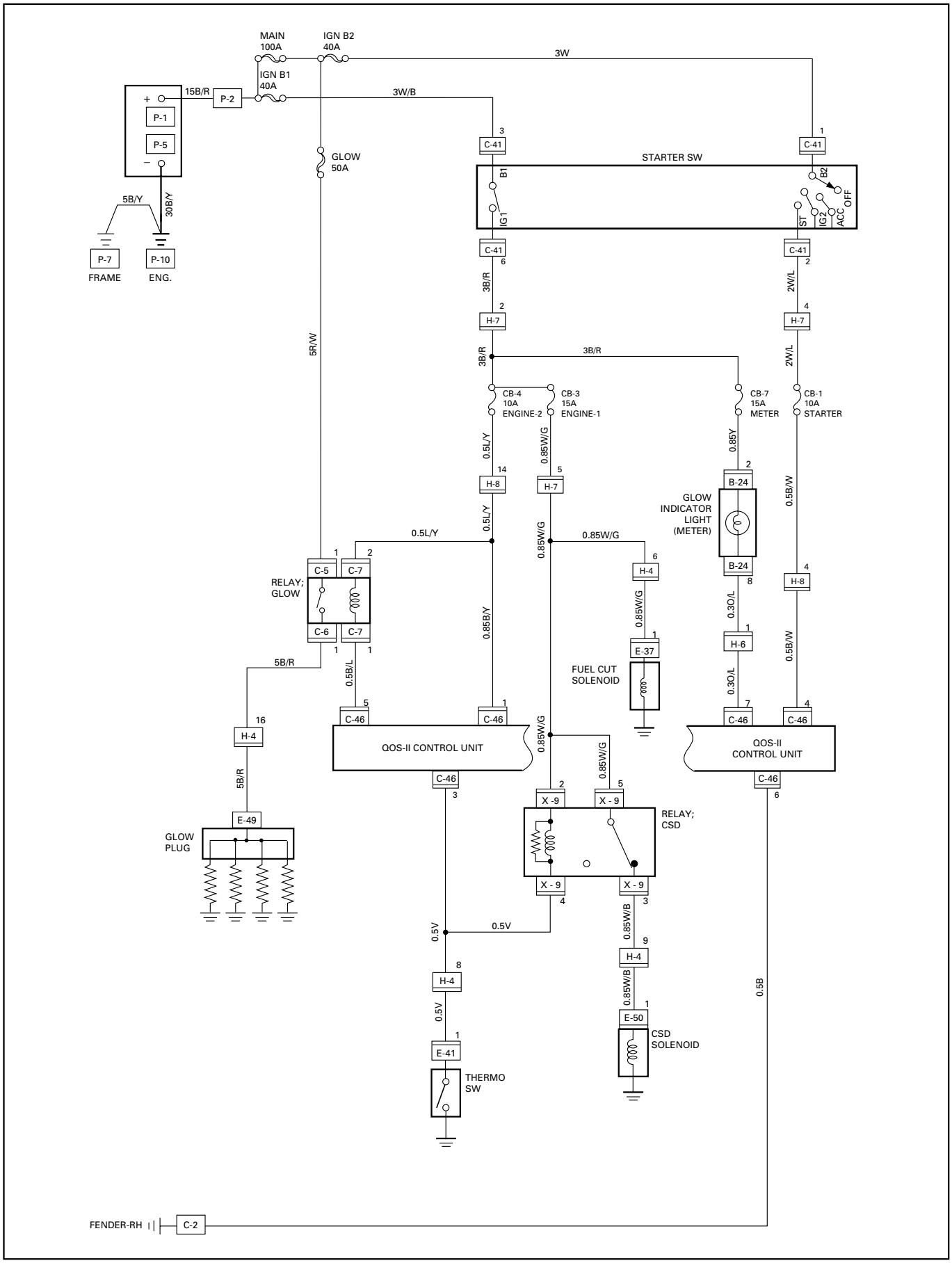

D08RV959

CIRCUIT DIAGRAM (RHD)

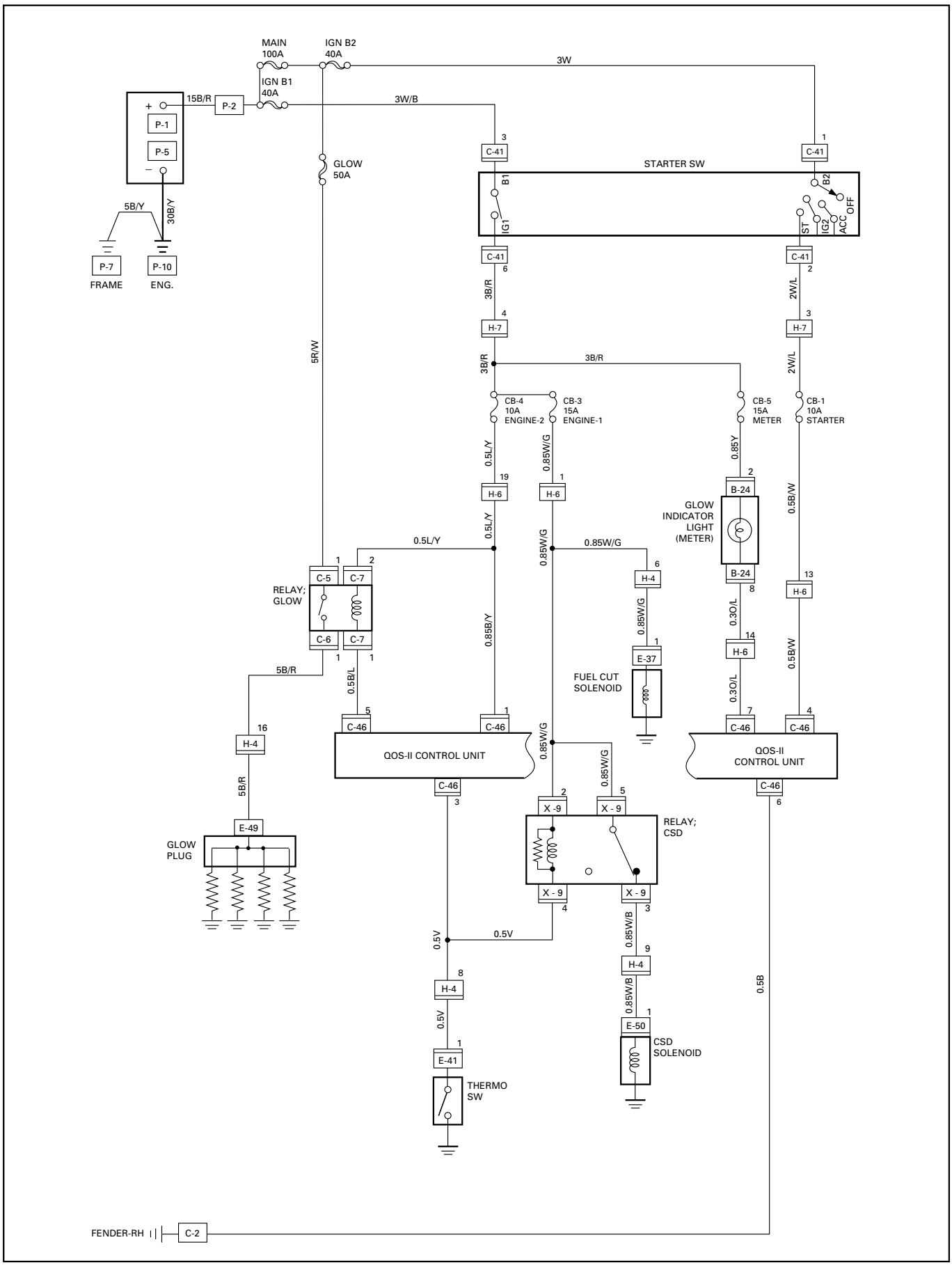

D08RV960

INSPECTION AND REPAIR

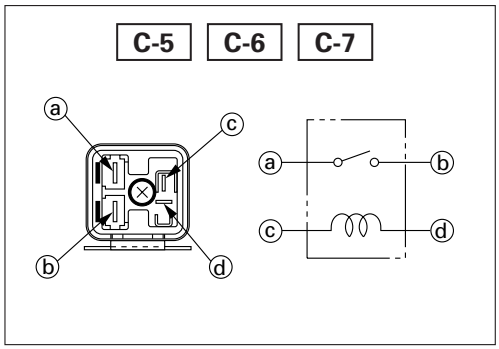

060RV007

Glow relay

Check continuity between the relay terminals.

ⓐ – ⓑ . . . . . No continuity

(When battery voltage is applied between ⓒ and ⓓ)

ⓐ – ⓑ . . . . . Continuity

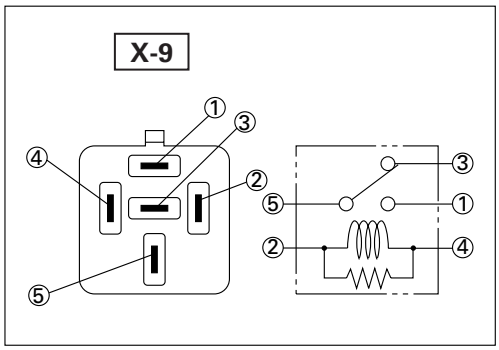

060RV005

CSD relay

Check continuity between the relay terminals.

③ – ⑤ . . . . . Continuity

(When battery voltage is applied between ② and ④)

③ – ⑤ . . . . . No continuity

MEMO

LIGHTING

PARTS LOCATION (LHD)

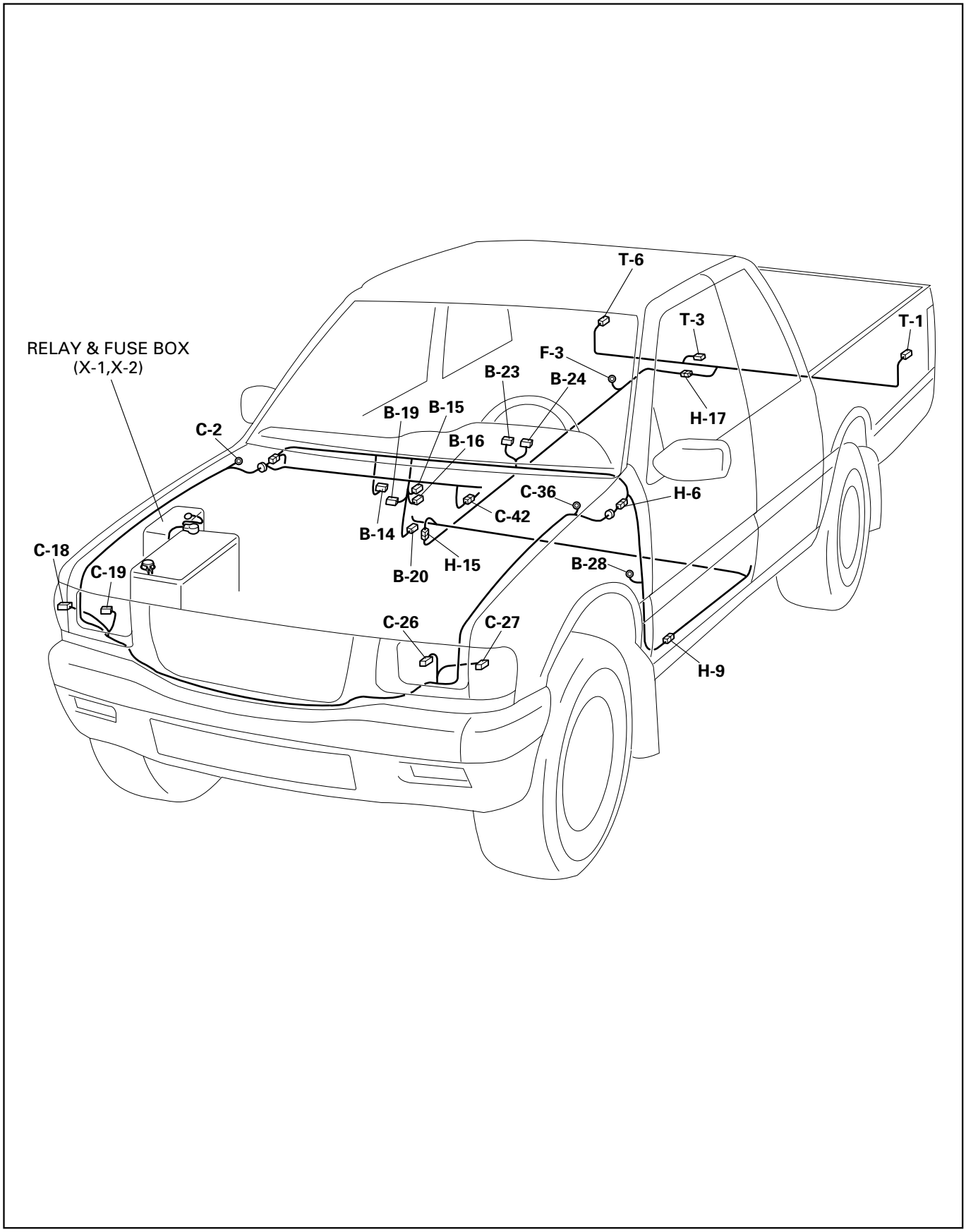

D08RVA28

PARTS LOCATION (6VD1-LHD)

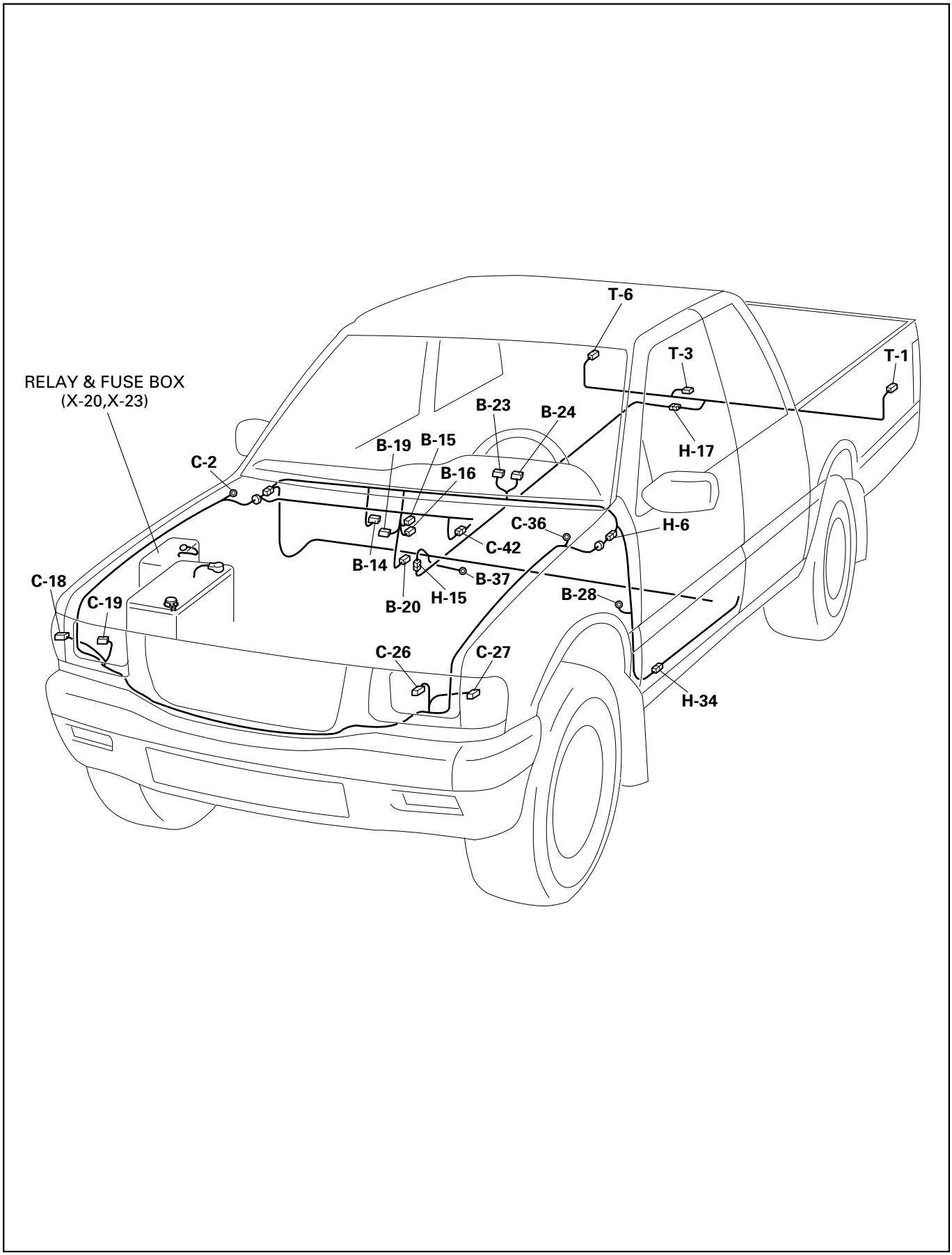

D08RW566

PARTS LOCATION (RHD)

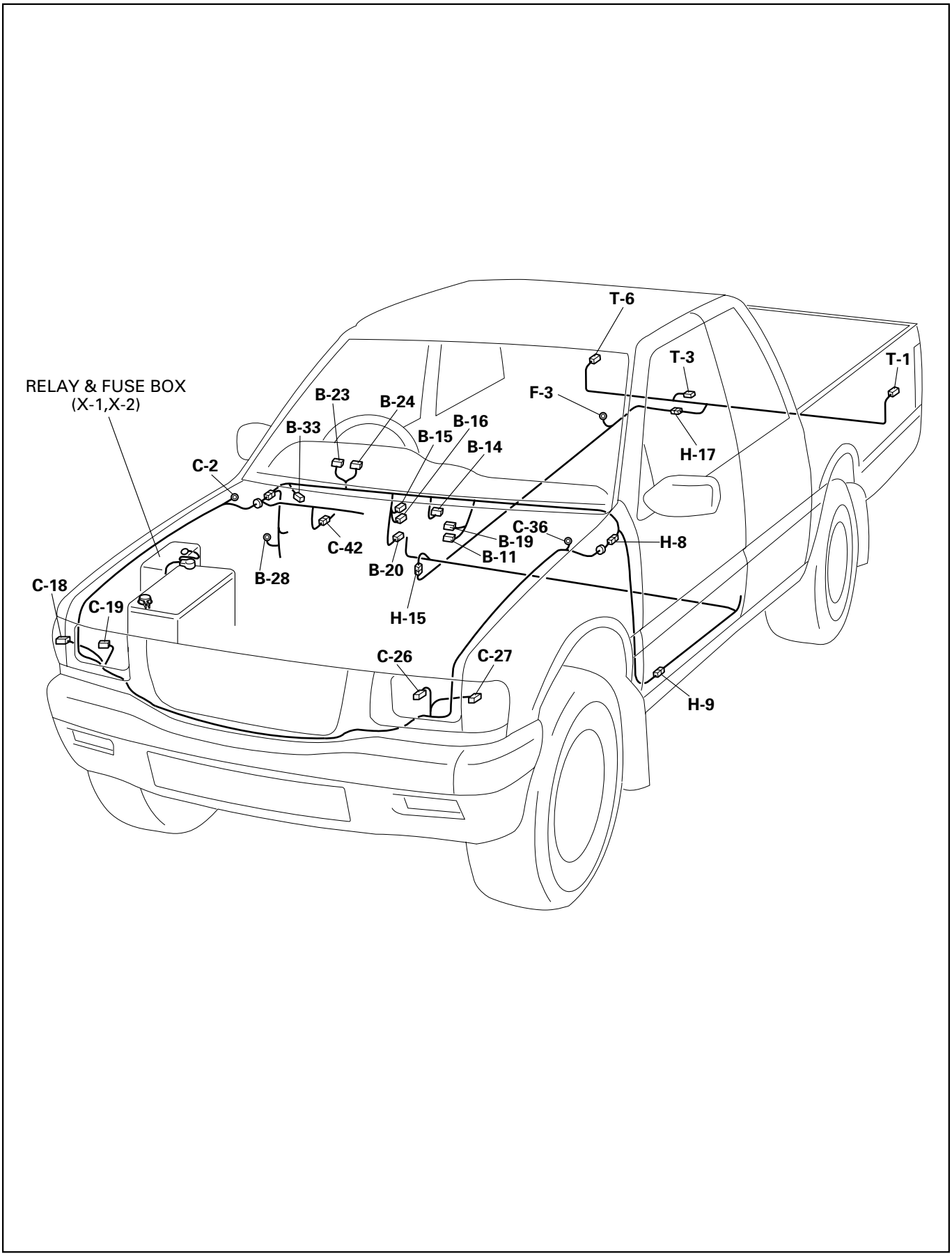

D08RVA27

PARTS LOCATION (6VD1-RHD)

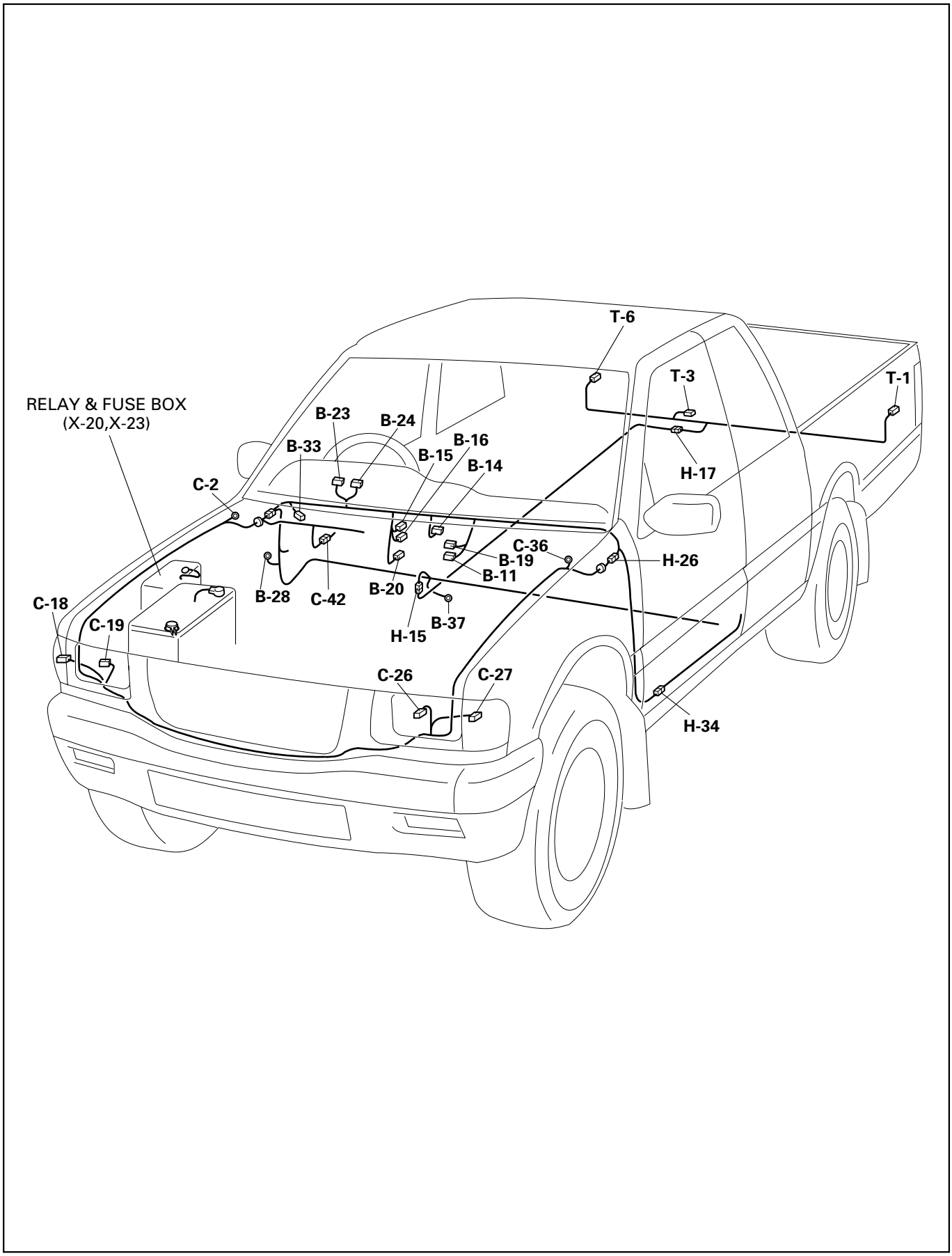

D05RW565

CIRCUIT DIAGRAM (LHD)

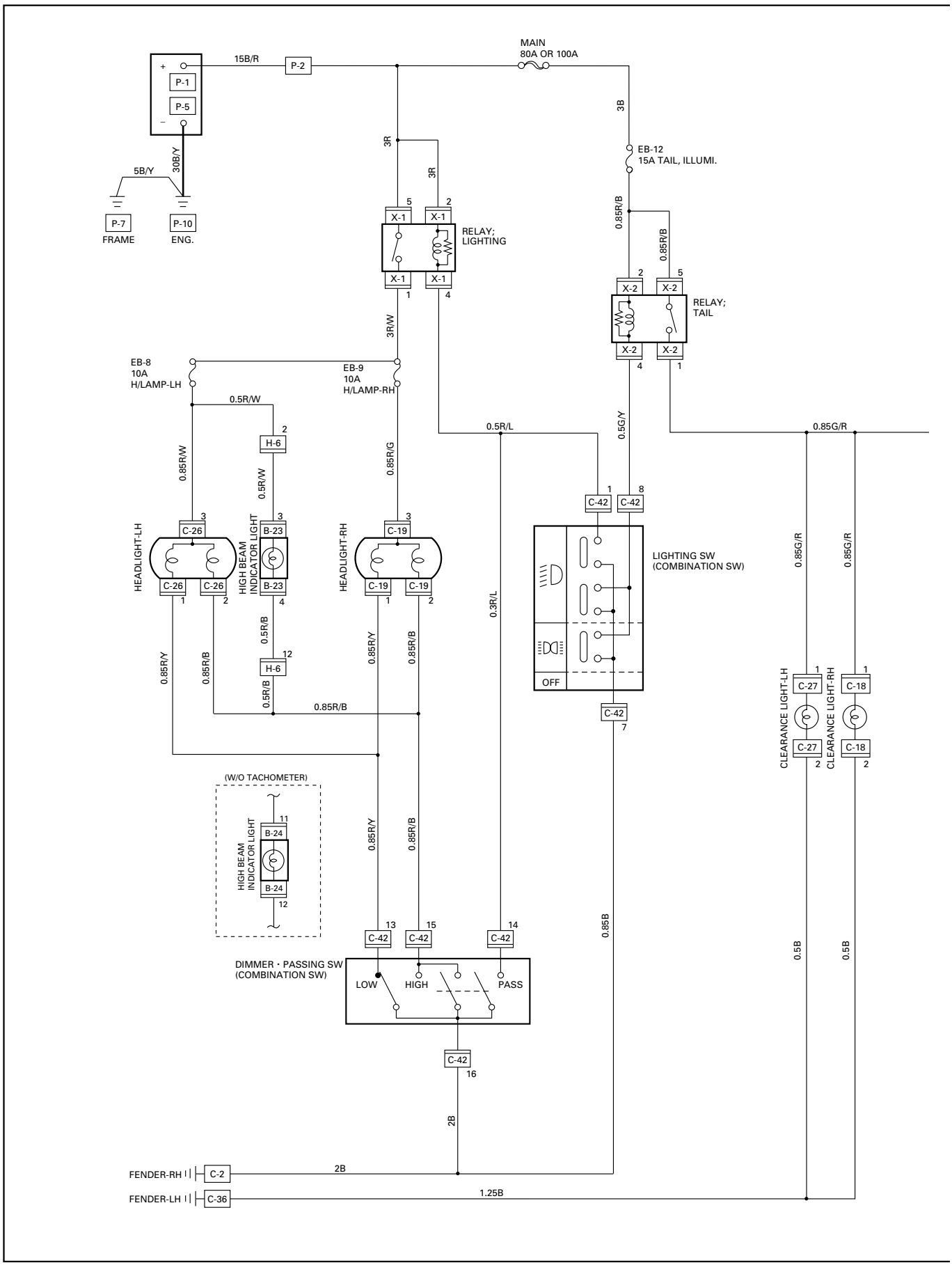

D08RV964

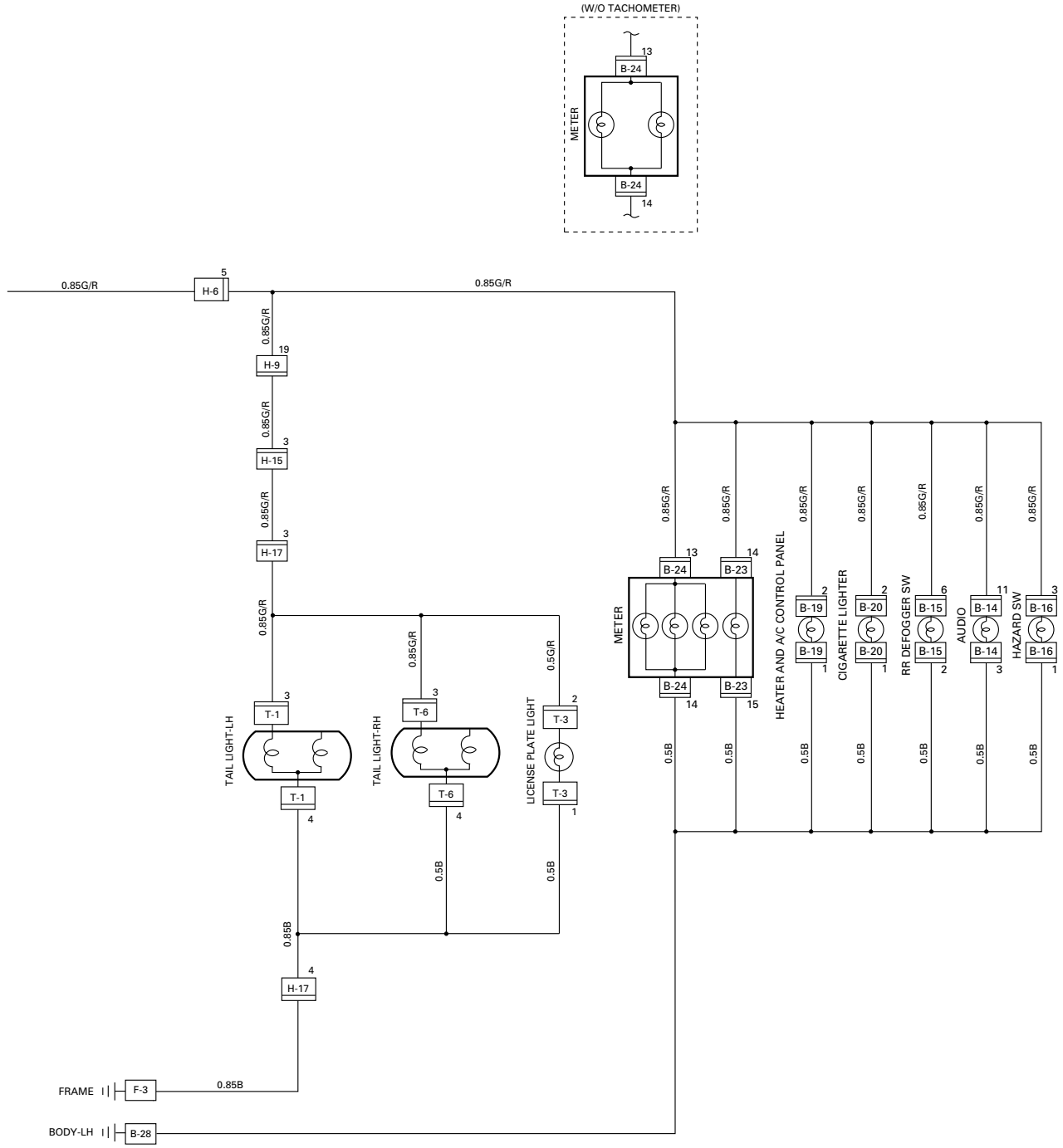
(W/O TACHOMETER)
METER
B-24
13
14
0.85G/R
H-6
5
H-9
19
H-15
3
H-17
3
T-1
3
4
TAIL LIGHT-LH
T-6
3
4
TAIL LIGHT-RH
T-3
2
1
LICENSE PLATE LIGHT
0.5G/R
0.5B
0.85B
H-17
4
FRAME
F-3
BODY-LH
B-28
B-23
14
15
HEATER AND A/C CONTROL PANEL
B-19
2
1
CIGARETTE LIGHTER
B-20
2
1
RR DEFOGGER SW
B-15
6
2
AUDIO
B-14
11
3
HAZARD SW
B-16
3
1

D08RV965

CIRCUIT DIAGRAM (6VD1-LHD)

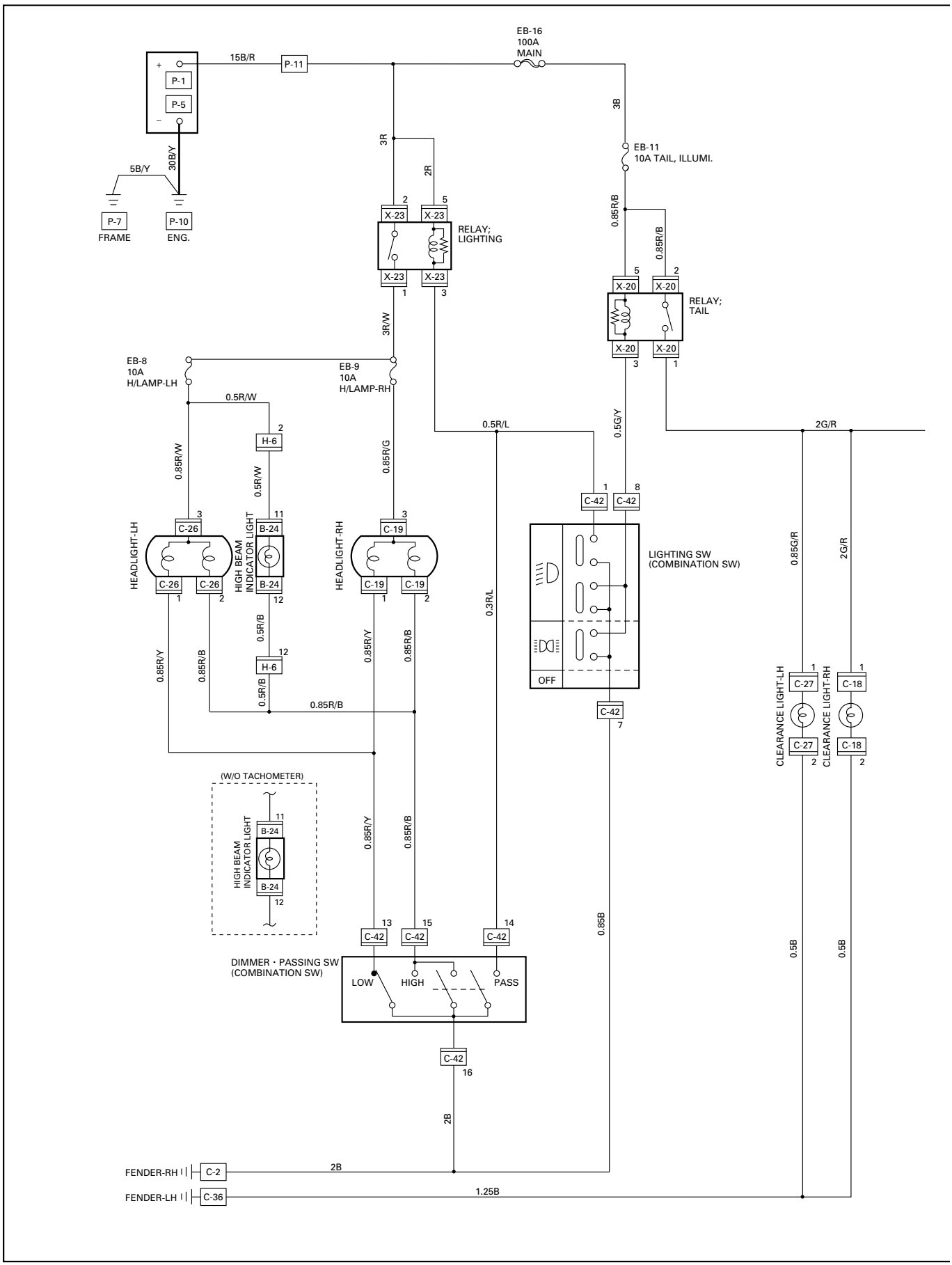

D08RW577

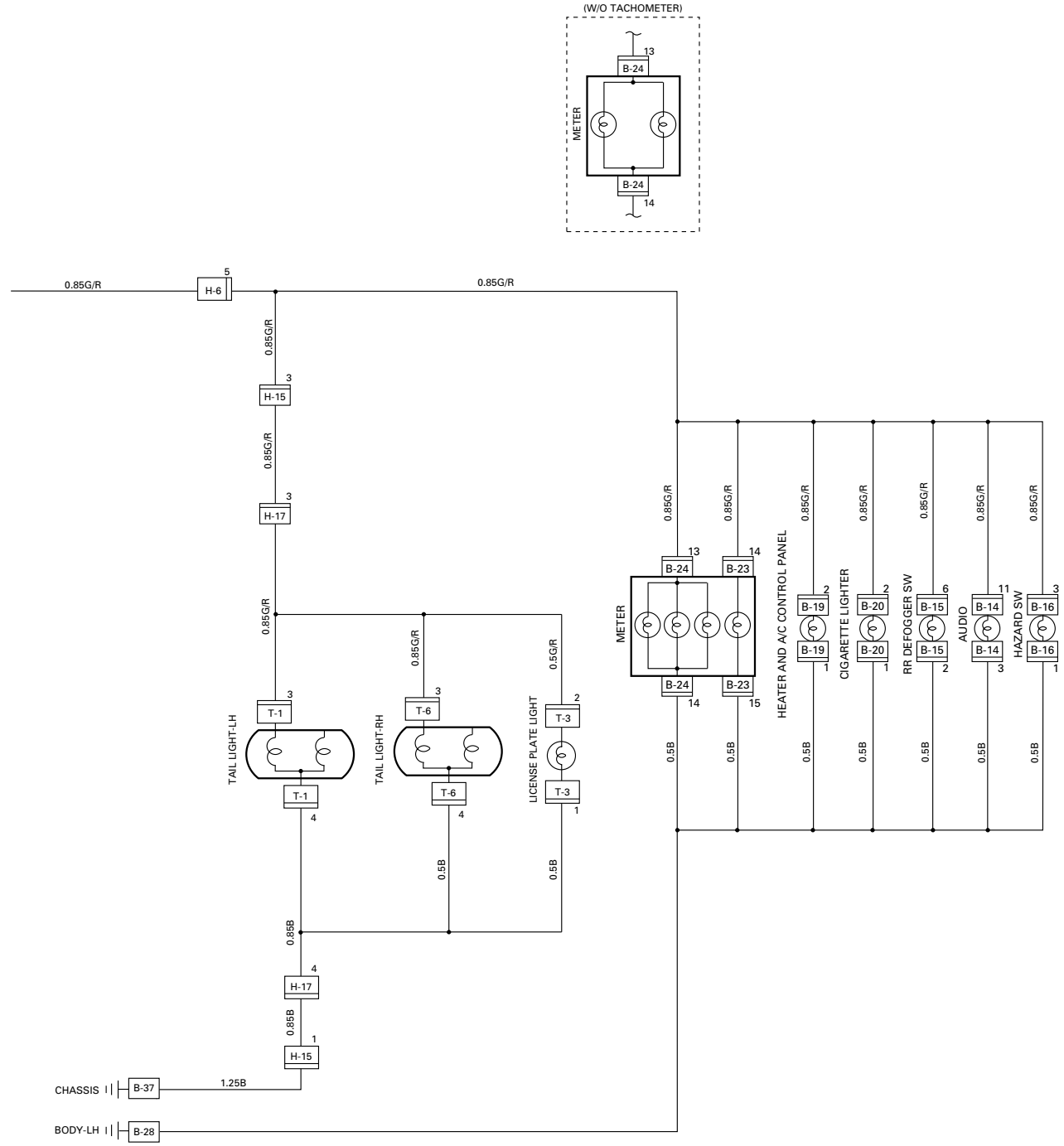
(W/O TACHOMETER)
METER
B-24
13
14
0.85G/R
H-6
5
H-15
3
H-17
T-1
T-6
T-3
TAIL LIGHT-LH
TAIL LIGHT-RH
LICENSE PLATE LIGHT
0.5G/R
0.5B
0.85B
1.25B
CHASSIS
B-37
BODY-LH
B-28
B-23
HEATER AND A/C CONTROL PANEL
CIGARETTE LIGHTER
RR DEFOGGER SW
AUDIO
HAZARD SW
B-19
B-20
B-15
B-14
B-16

D08RW578

CIRCUIT DIAGRAM (RHD)

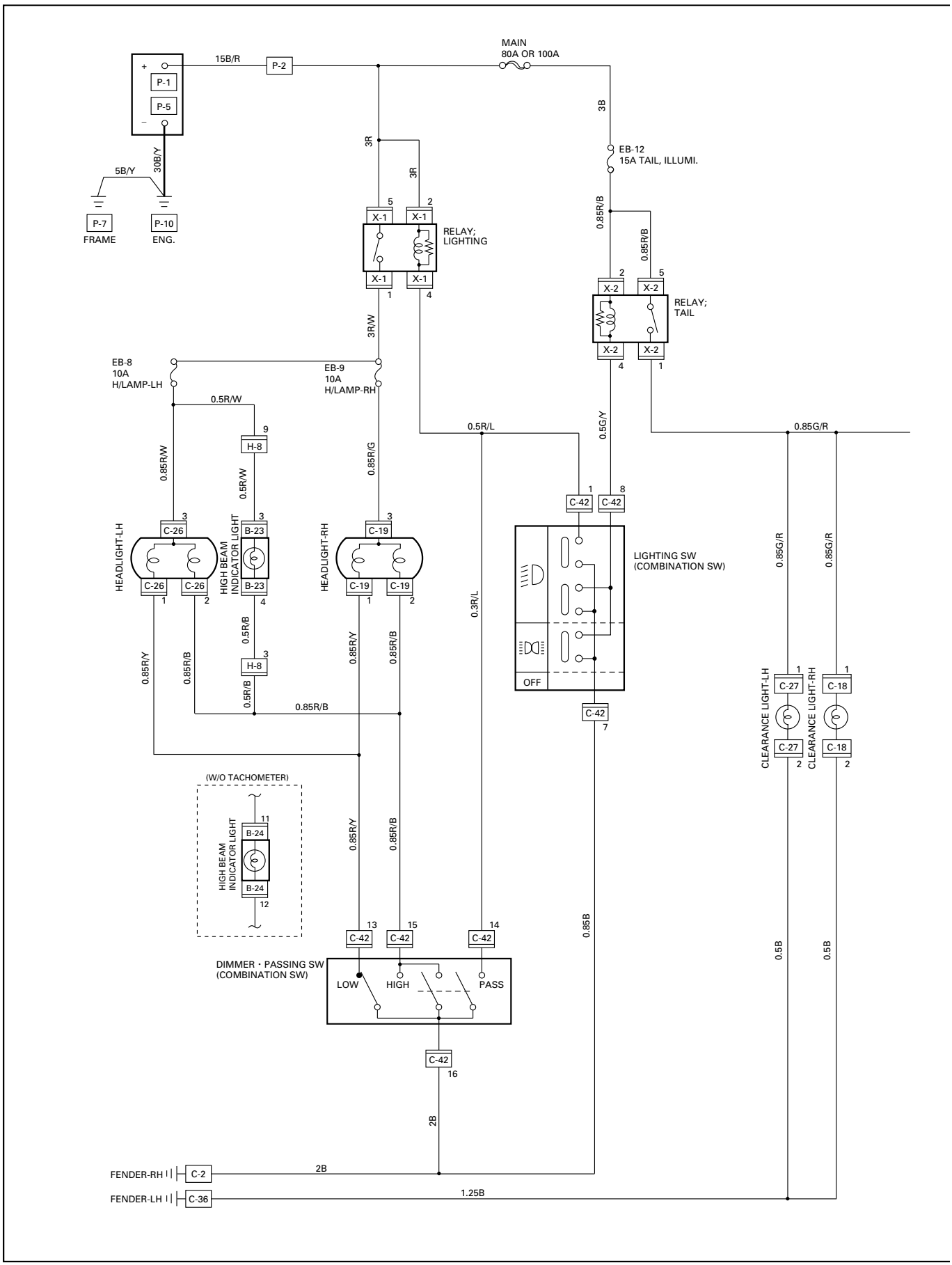

D08RV962

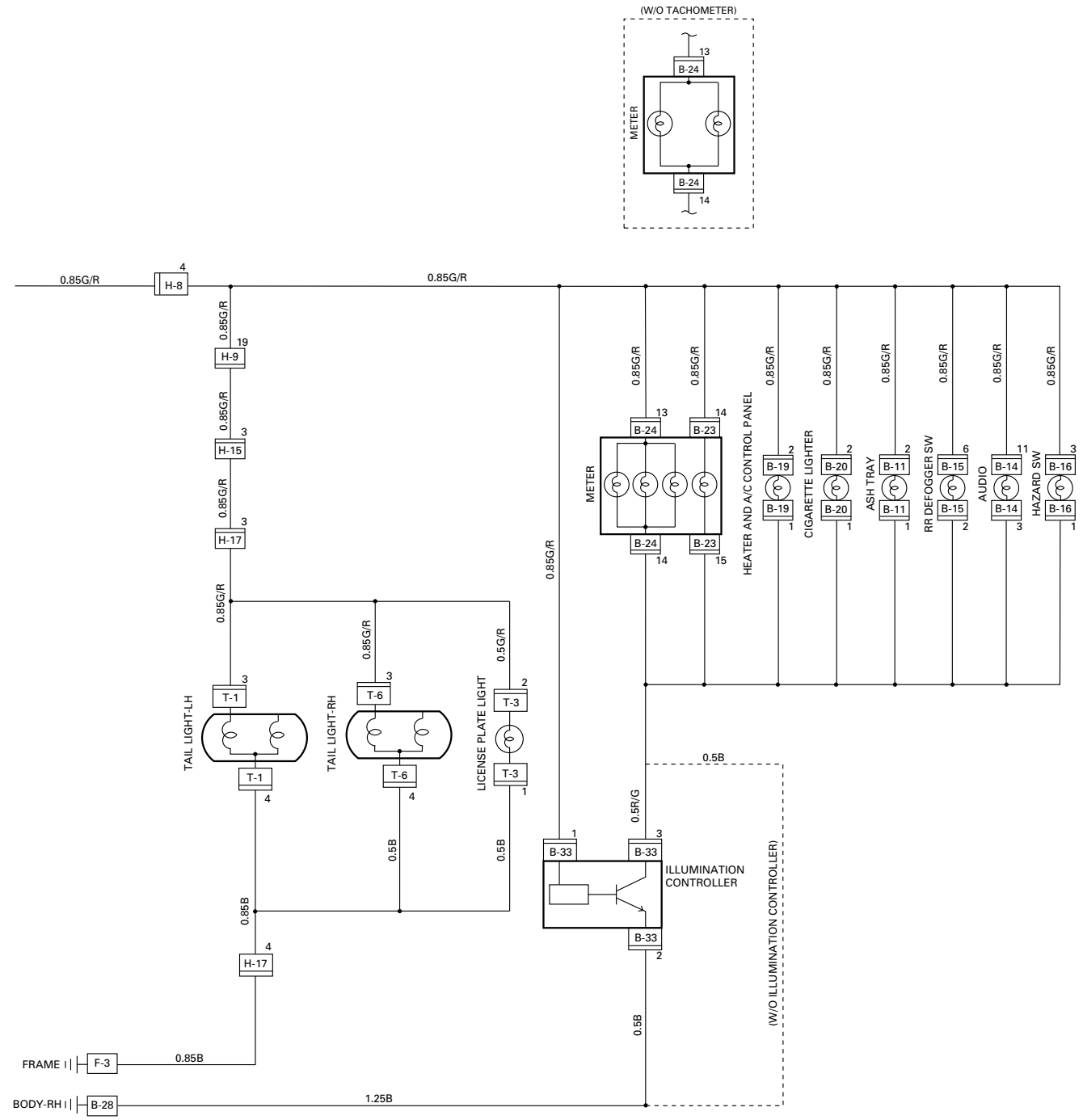
(W/O TACHOMETER)
METER
B-24
13
14
0.85G/R
H-8
4
H-9
19
H-15
3
H-17
T-1
T-6
T-3
TAIL LIGHT-LH
TAIL LIGHT-RH
LICENSE PLATE LIGHT
0.5G/R
0.85B
0.5B
0.5R/G
B-33
ILLUMINATION CONTROLLER
(W/O ILLUMINATION CONTROLLER)
B-23
15
HEATER AND A/C CONTROL PANEL
B-19
CIGARETTE LIGHTER
B-20
ASH TRAY
B-11
RR DEFOGGER SW
B-15
AUDIO
B-14
HAZARD SW
B-16
FRAME
F-3
BODY-RH
B-28
1.25B

D08RV963

CIRCUIT DIAGRAM (6VD1-RHD)

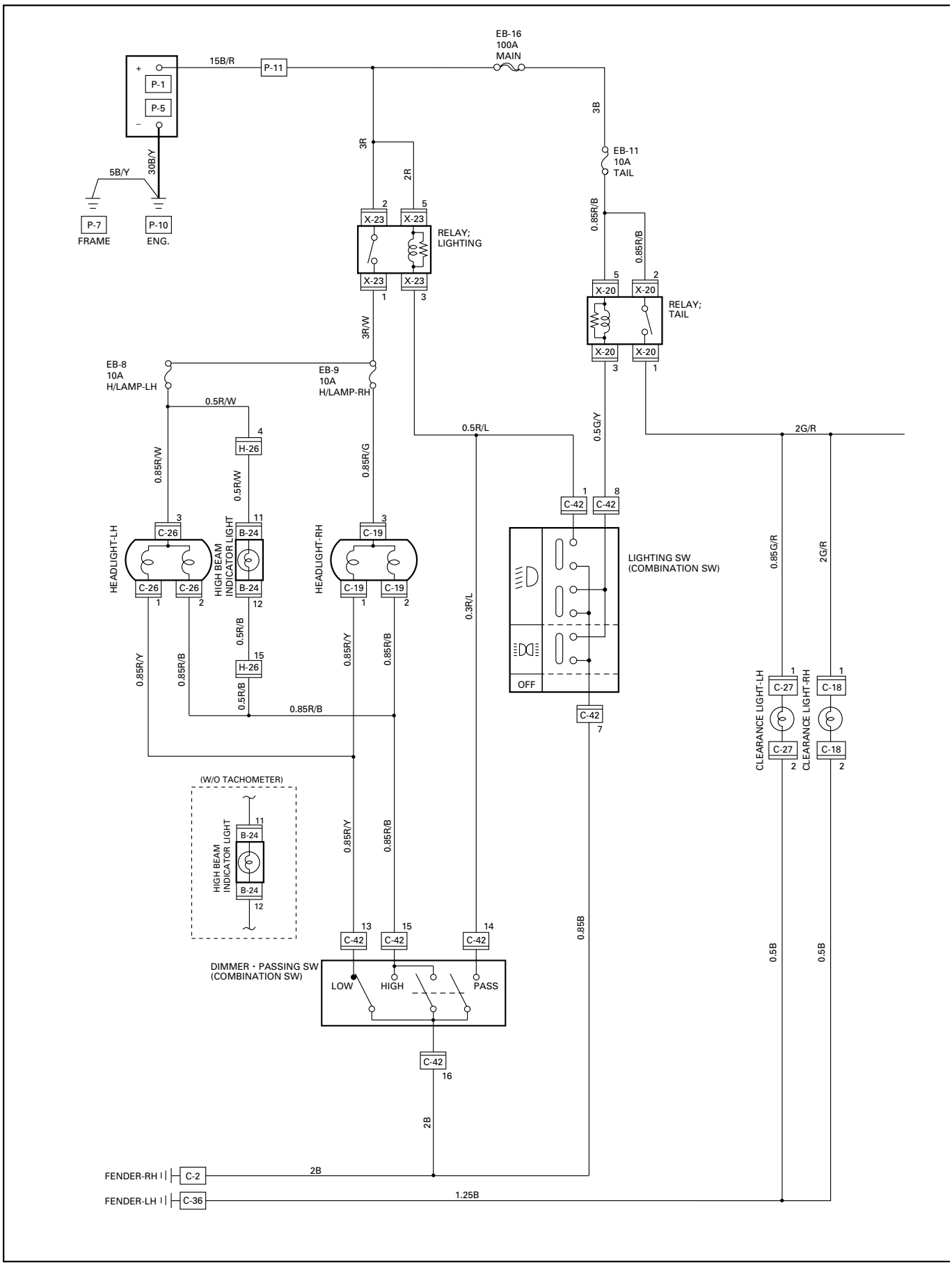

D08RW579

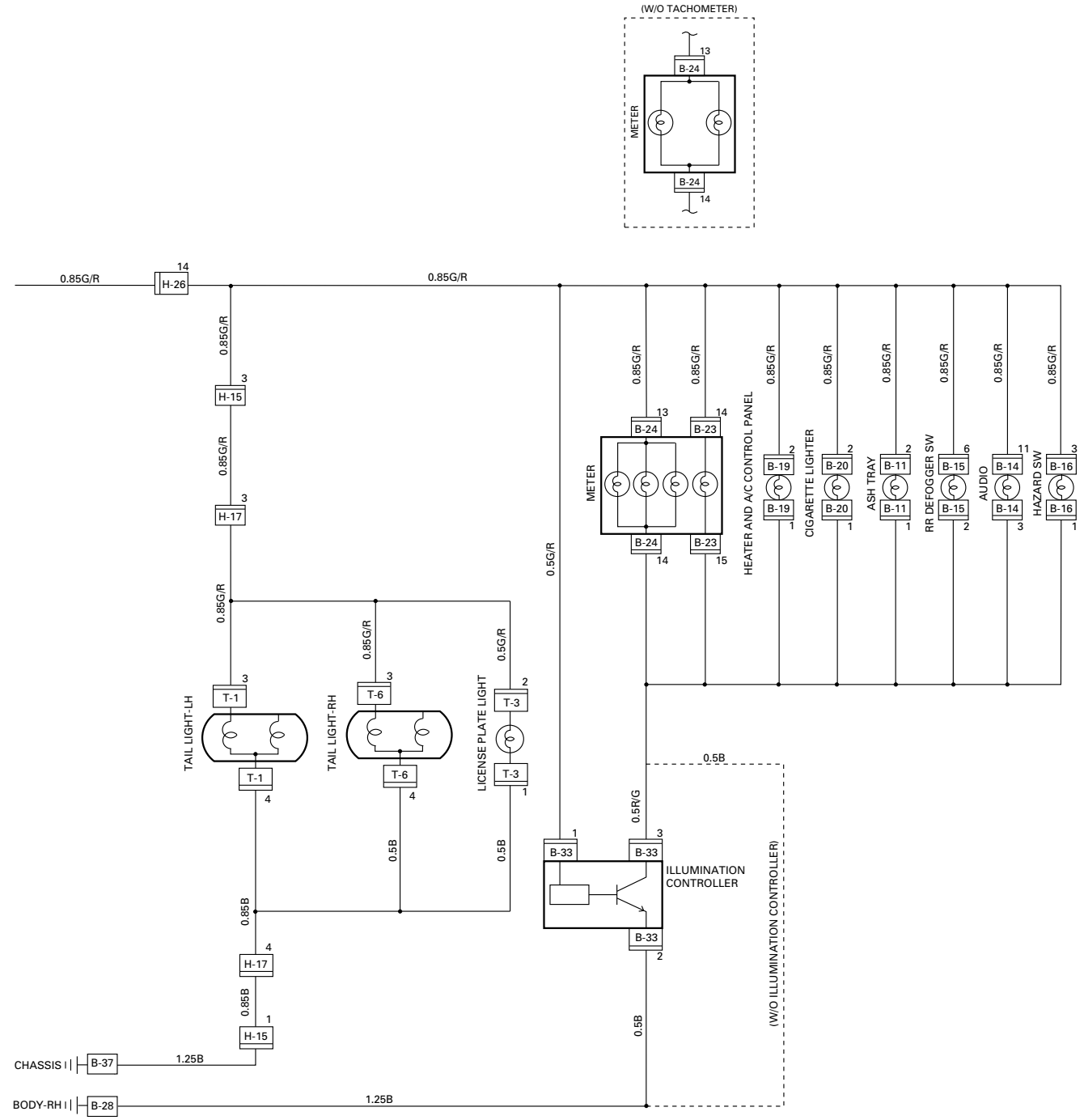
(W/O TACHOMETER)
METER
B-24
13
14
0.85G/R
H-26
H-15
H-17
T-1
T-6
T-3
TAIL LIGHT-LH
TAIL LIGHT-RH
LICENSE PLATE LIGHT
0.5G/R
0.5B
0.85B
0.5R/G
B-33
ILLUMINATION CONTROLLER
(W/O ILLUMINATION CONTROLLER)
HEATER AND A/C CONTROL PANEL
CIGARETTE LIGHTER
ASH TRAY
RR DEFOGGER SW
AUDIO
HAZARD SW
B-19
B-20
B-11
B-15
B-14
B-16
B-23
CHASSIS
B-37
1.25B
BODY-RH
B-28

D08RW580

TROUBLE SHOOTING

HEADLIGHT

1. Both the headlights (high and low beam) do not light

Checkpoint		Trouble Cause	Countermeasure
Ground point contact (C-2)	NG	Poor ground point contact	Repair the wiring
OK			
Combination switch continuity	NG	Poor switch contact or sw faulty	Repair or replace the combination switch
OK			
Lighting relay	NG	Poor relay contact or relay faulty	Reinstall or replace the lighting relay
OK			
Voltage between 5 [X-1] - ground and 2 [X-1] - ground	NG	Open circuit between battery positive terminal and lighting relay	Repair open circuit
OK			
Voltage between 1 [C-42] - ground	NG	Open circuit between lighting relay and lighting switch	Repair open circuit or connector contact
OK			
Wiring continuity between 7 [C-42] - [C-2] and 16 [C-42] - [C-2]	NG	Open circuit	Repair open circuit

2. High or low beam does not light on both headlights

Checkpoint		Trouble Cause		Countermeasure
Dimmer · passing switch continuity	NG	Poor switch contact or switch faulty	—	Repair or replace the combination switch
OK				
Voltage between 13 C-42 - ground and 15 C-42 - ground	NG	Open circuit between headlight and dimmer · passing switch	—	Repair open circuit or connector contact

3. RH (or LH) high and low beam does not light

Fuse No. EB-8 (10A) or No. EB-9 (10A) (Relay and fuse box) (No. EB-9 RH, No. EB-8: LH)	NG	Poor installation or blown fuse	—	Reinstall or replace fuse No. EB-8 or No. EB-9
OK				
Headlight connector continuity	NG	Blown filament or air leakage	—	Replace the headlight bulb
OK				
Wiring continuity between connector 3 C-19 -fuse No. EB-9 or 3 C-26 -fuse No. EB-8	NG	Open circuit and/or poor connector contact	—	Repair or replace the wire and/or connector

4. High or low beam does not light on one headlight (RH or LH)

Headlight connector continuity	NG	Blown filament	—	Replace the headlight assembly
OK				
Wiring continuity between headlight and dimmer · passing switch	NG	Open circuit between headlight and dimmer · passing switch	—	Repair open circuit or connector contact

5. Headlight does not go out

Checkpoint		Trouble Cause		Countermeasure
Lighting relay continuity between connector 1 [X-1] - 5 [X-1] (Should be no continuity)	NG	Relay point fused	—	Replace the lighting relay
OK				
Lighting switch continuity between connector 1 [C-42] - 7 [C-42] when switch is OFF (Should be no continuity)	NG	Switch point fused or faulty	—	Replay the combination switch
OK				
Dimmer · passing switch continuity between connector 14 [C-42] - 16 [C-42] when switch is not operating (Should be no continuity)	NG	Switch point fused or faulty	—	Repair or replace the combination switch
OK				
Check if headlight goes out when connector [C-42] is disconnected	NG	Short circuit	—	Repair short circuit between 4 [X-1] - 1 [C-42] and 4 [X-1] - 14 [C-42]

6. Insufficient headlight brightness

Headlight lens	NG	Lens dirty	—	Clean the light lens
OK				
Headlight bulb	NG	Bulb filament faulty	—	Replace the headlight bulb
OK				
Dimmer · passing switch wire continuity between connector 16 [C-42] - [C-2]	NG	Poor ground point contact	—	Repair the wiring

7. Passing light does not function when dimmer switch is operated

Checkpoint		Trouble Cause	Countermeasure
Dimmer switch	NG	Poor switch point contact	Repair or replace the dimmer switch
OK			
Voltage between 14 C-42 - ground (Should be battery voltage present)	NG	Open circuit	Repair open circuit between 4 X-1 - 14 C-42

8. Headlight beam does not change when dimmer switch is operated

Dimmer switch	NG	Loose beam lever or foreign material in switch	Repair or replace the dimmer switch

TAIL LIGHT, LICENSE PLATE LIGHT, CLEARANCE LIGHT AND ILLUMINATION CONTROLLER

1. All lights do not light

Checkpoint		Trouble Cause		Countermeasure
Fuse No. EB-12 (15A, Relay and fuse box)	NG	Poor fuse contact or blown	—	Reinstall or replace the fuse No. EB-12
OK				
Lighting switch continuity between connector 8 C-42 - 7 C-42	NG	Poor switch point or connector contact	—	Repair or replace the combination switch
OK				
Tail relay	NG	Poor relay contact or relay faulty	—	Reinstall or replace the tail relay

2. Tail light does not light

Tail light bulb continuity	NG	Bulb burned out or poor connector contact	—	Replace the bulb or repair connector contact
OK				
Continuity between connector 3 T-6 - 4 T-6 (RH) or 3 T-1 - 4 T-1 (LH)	NG	Open circuit or poor connector contact	—	Repair open circuit or connector contact

3. License plate light does not light

Checkpoint		Trouble Cause	Countermeasure
License plate light bulb continuity	NG	Bulb burned out or poor connector contact	Replace the bulb or repair connector contact
OK			
Continuity between connector 1 T-3 - 2 T-3	NG	Open circuit or poor connector contact	Repair open circuit or connector contact

4. Clearance light does not light

Clearance light bulb continuity	NG	Bulb burned out or poor connector contact	Replace the bulb or repair connector contact

5. Illumination controller does not operate

Disconnect the illumination controller connector (Light should be dim)	NG	Short circuit	Repair short circuit or replace the wire
OK			
Turn the illumination controller knob (Brightness should change)	NG	Loose knob or faulty controller	Repair knob installation or replace the controller

REMOVAL AND INSTALLATION

HEADLIGHT

Removal

1. Remove the radiator grille center bolt.

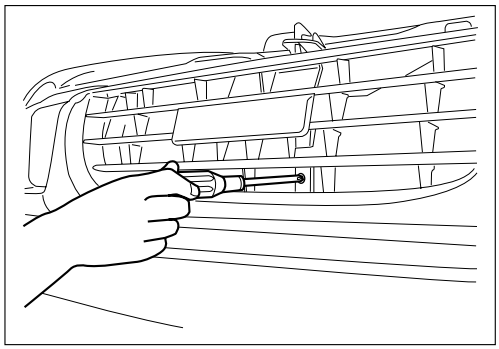

D08RV753

2. Use a screwdriver to raise the clip and release the lock.

   Place a clean rag beneath the screwdriver tip to protect the body painted surfaces.

3. Remove the radiator grille.

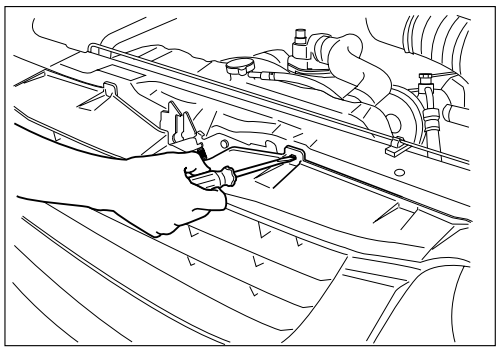

D08RV754

4. Remove the headlight rim.

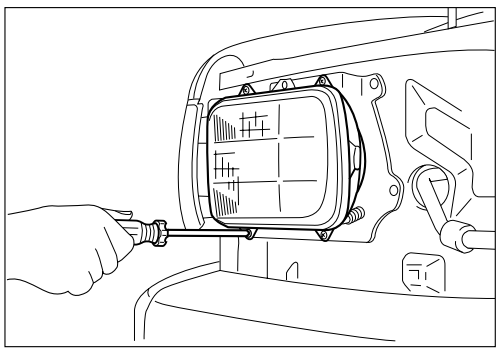

D08RV855

5. Disconnect the headlight connector.
6. Remove the headlight.

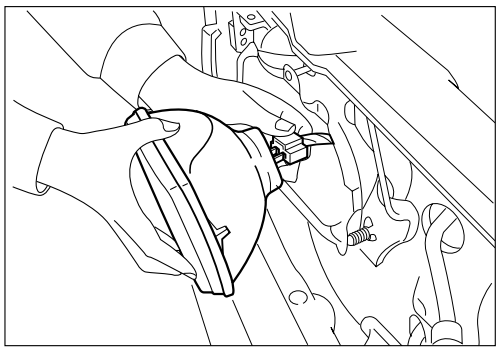

D08RV856

REMOVAL AND INSTALLATION

HEADLIGHT (RECTANGULAR TYPE)

Removal

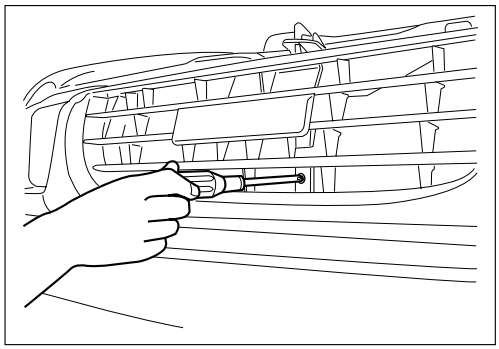

D08RV753

1. Remove the radiator grille center bolt.

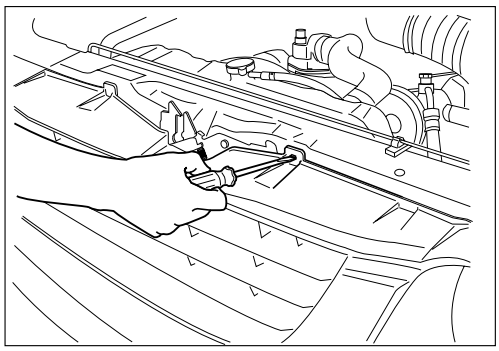

D08RV754

2. Use a screwdriver to raise the clip and release the lock.

   Place a clean rag beneath the screwdriver tip to protect the body painted surfaces.
3. Remove the radiator grille.

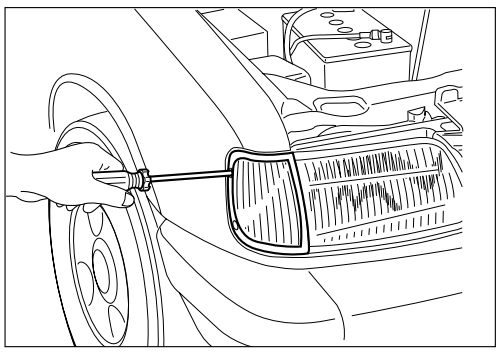

D08RV859

4. Remove the side screws.

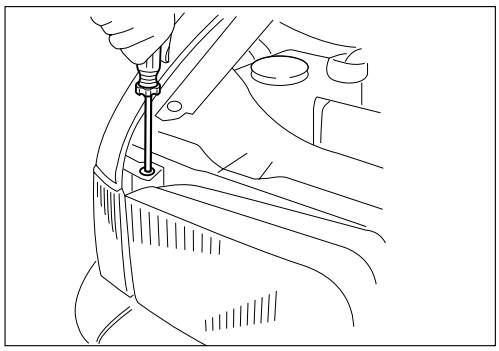

D08RV860

5. Remove the top screw.

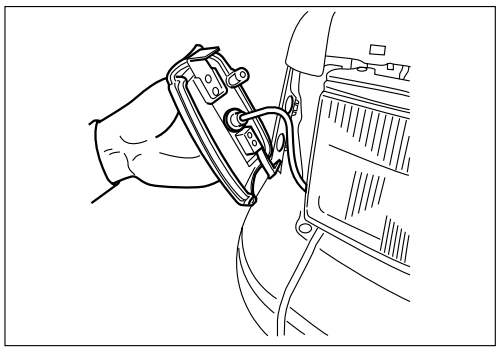

D08RW563

6. Remove the clearance light.

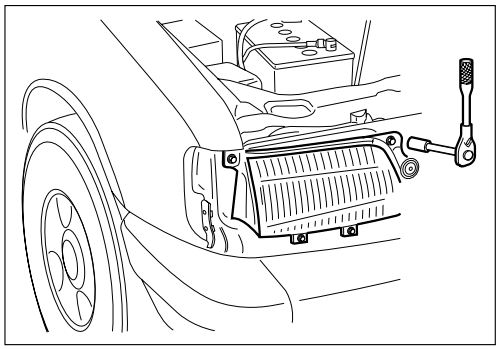

D08RW557

7. Remove the headlight screws.

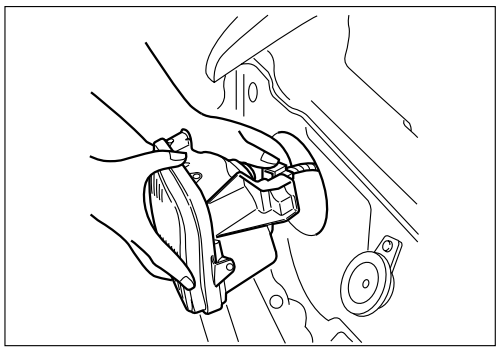

D08RW564

8. Disconnect the headlight connector.
9. Remove the headlight.

Installation

Follow the removal procedure in the reverse order to install the headlight.

Pay close attention to the important points mentioned in the following paragraphs.

Connector

Be absolutely sure that the headlight connector is securely connected.

This will prevent a contact and an open circuit.

LIGHTING SWITCH

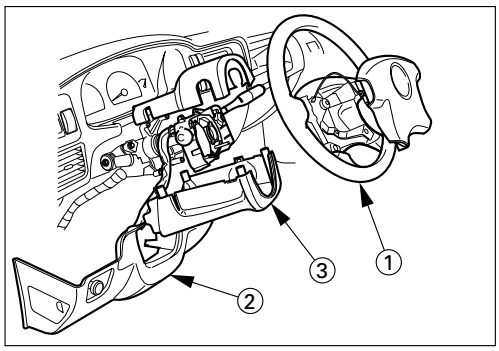

D08RV888

Removal

1. Remove the steering wheel ①.
   Refer to the "STEERING" Section of this manual.
2. Remove the Instrument panel lower cover ②.
3. Remove the steering column cover ③.

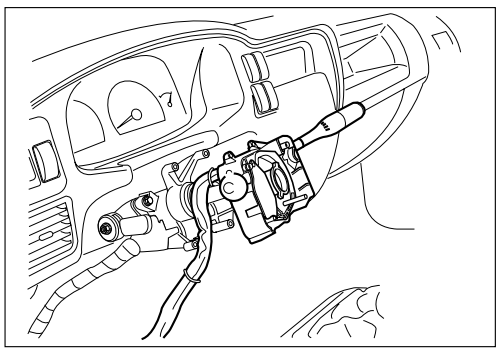

D08RV747

4. Disconnect the connector.
5. Remove the lighting switch from the steering shaft.

Installation

Follow the removal procedure in the reverse order to install the lighting switch.

Pay close attention to the important points mentioned in the following paragraphs.

Connector

Be absolutely sure that the lighting switch connector is securely connected.

This will prevent a poor contact and an open circuit.

Wire Harness

Do not pinch the wire harnesses between the cluster and the meter hood during the cluster installation procedure.

Wire damage will result.

CLEARANCE LIGHT

Removal

1. Remove the radiator grille. (Refer to headlight removal procedure.)
2. Remove the side screws.

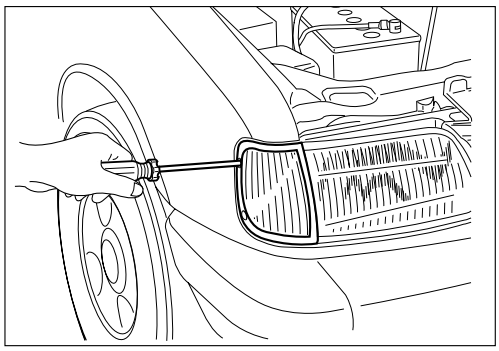

D08RV859

3. Remove the top screw.

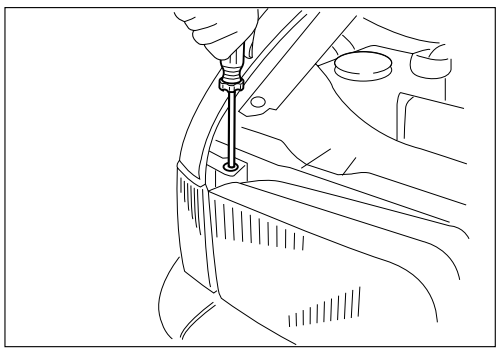

D08RV860

4. Turn the socket counterclockwise to disconnect it from the clearance light housing.
5. Pull the bulb from the socket.

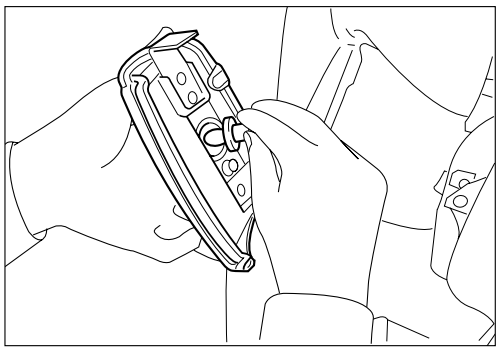

D08RV861

Installation

Follow the removal procedure in the reverse order to install the clearance light.

Pay close attention to the important points mentioned in the following paragraphs.

Connector

Be absolutely sure that the clearance light connector is securely connected.

This will prevent a poor contact and an open circuit.

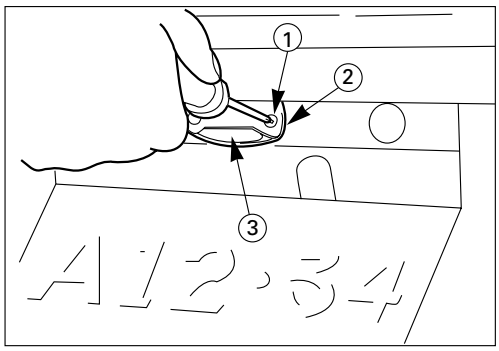

D08RV834

LICENSE PLATE LIGHT

Removal

1. Loosen the screws ①.
2. Remove the lens cover ② and the lens ③.
3. Pull the bulb to remove it.

Installation

Follow the removal procedure in the reverse order to install the license plate light.

Pay close attention to the important points mentioned in the following paragraphs.

Bulb

Be absolutely sure that the license plate light bulb is correctly installed.

This will prevent a poor contact and an open circuit.

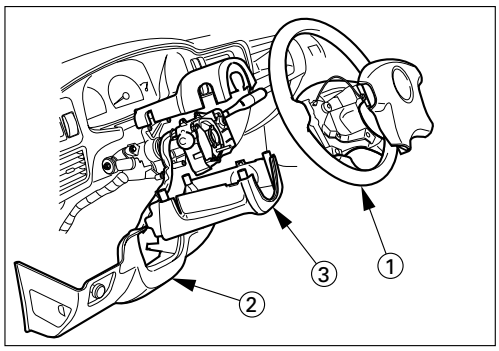

D08RV888

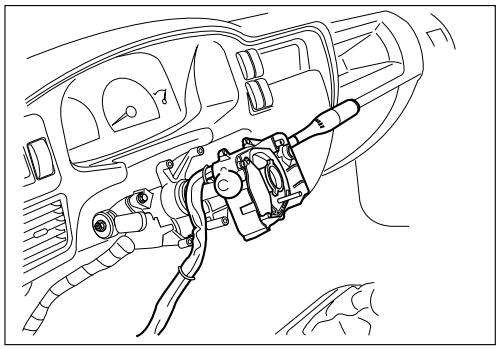

D08RV747

HEADLIGHT BEAM SWITCH

Removal

1. Remove the steering wheel ①.
   Refer to the "STEERING" Section of this manual.
2. Remove the Instrument panel lower cover ②.
3. Remove the steering column cover ③.
4. Disconnect the connector.
5. Remove the headlight beam switch (lever) from the steering shaft.

Installation

Follow the removal procedure in the reverse order to install the headlight beam switch (lever).

Pay close attention to the important points mentioned in the following paragraphs.

Connector

Be absolutely sure that the headlight beam switch connector is securely connected.

This will prevent a poor contact and an open circuit.

Wire Harness

Do not pinch the wire harnesses between the cluster and the meter hood during the cluster installation procedure.

Wire damage will result.

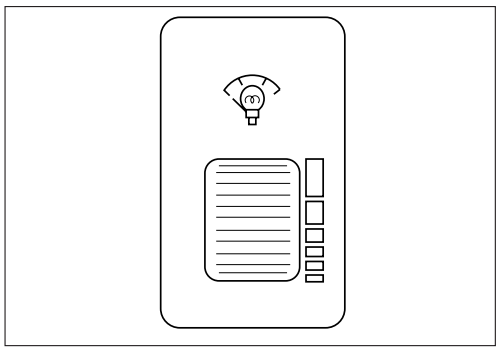

825RS032

ILLUMINATION CONTROLLER

Turning the illumination controller knob upward increases the brightness of each illumination light, turning it downward decreases its brightness.

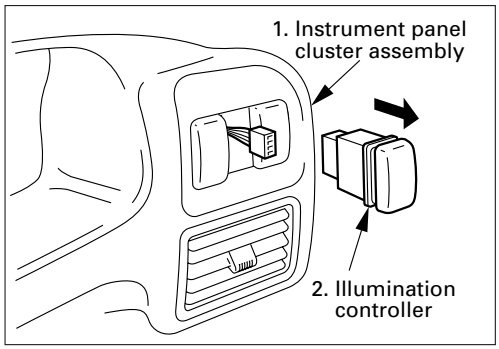

825RV104

Removal

1. **Instrument Panel Cluster Assembly**
   - Refer to Section 10 “BODY” for instrument panel cluster assembly removal steps.
2. **Illumination Controller**
   - Disconnect the switch connector.
   - To remove the switch, push the lock from the back side of the cluster assembly.

Installation

To install, follow the removal procedure in the reverse order.

Connector

Be absolutely sure that the illumination controller connector is securely connected.

This will prevent a poor contact and an open circuit.

AIMING OF HEADLIGHT

Check and adjust the inflation pressures, clean the headlight lenses, park the vehicle on a level surface and insure that vehicle is at curb weight.

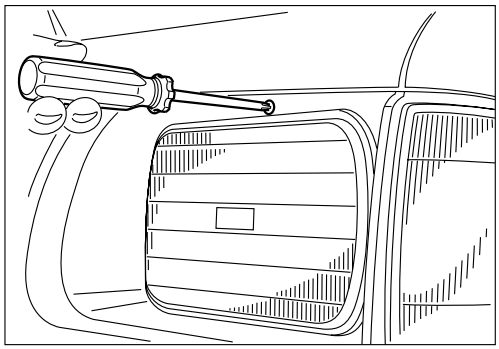

D08RV869

VERTICAL ADJUSTMENT

Use a screwdriver for vertical adjustment.

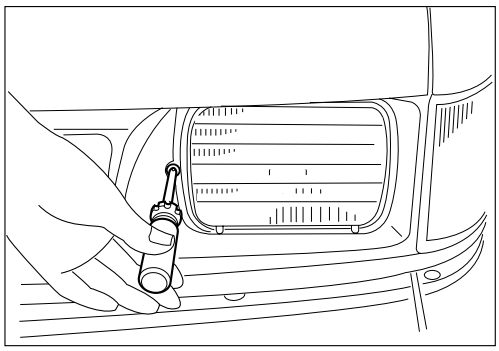

D08RV868

HORIZONTAL ADJUSTMENT

Use a screwdriver horizontal adjustment.

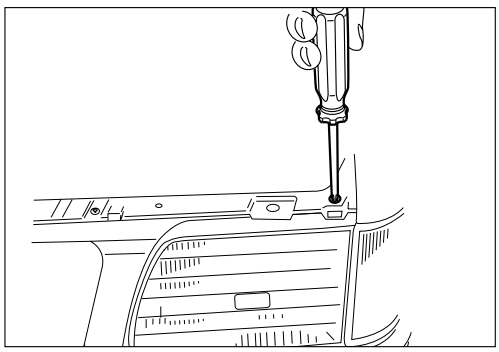

D08RW433

VERTICAL ADJUSTMENT

Use a screwdriver for vertical adjustment.

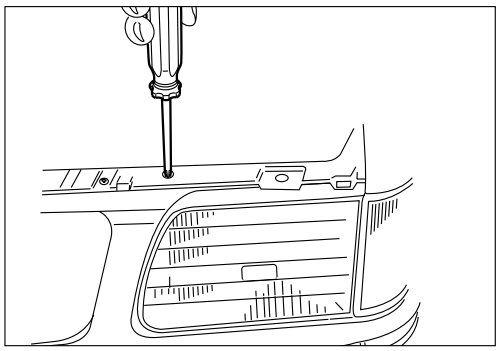

D08RW434

HORIZONTAL ADJUSTMENT

Use a screwdriver horizontal adjustment.

INSPECTION AND REPAIR

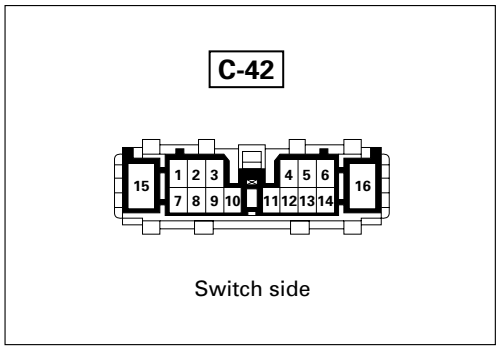

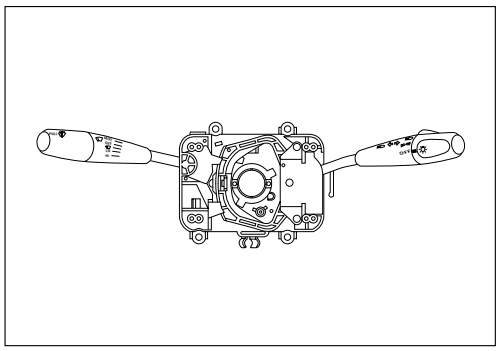

825RV068

LIGHTING SWITCH

Lighting Switch Connections

Terminal No. / SW position	1	7	8
OFF			
Tail		○	○
↕		○	○
Headlight	○	○	○

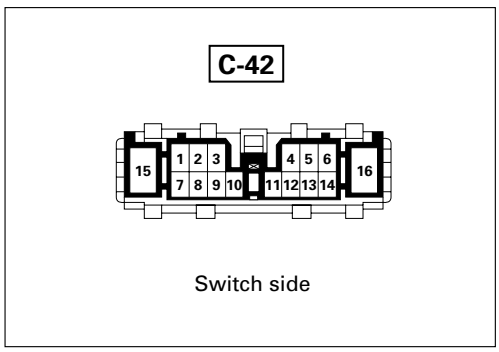

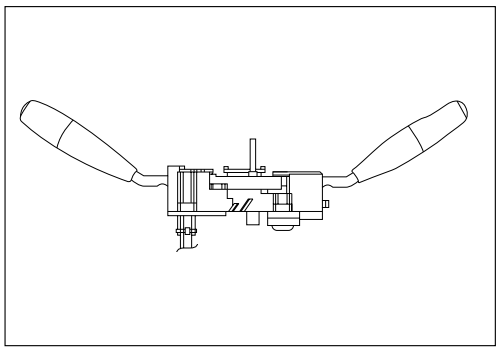

825RV067

HEADLIGHT BEAM SWITCH

Headlight Beam and Passing Switch Connections

SW position / Terminal No.		16	13	15	14
At “Dimmer” position	HI	○		○	
	LO	○	○		
At “Passing” position		○		○	○

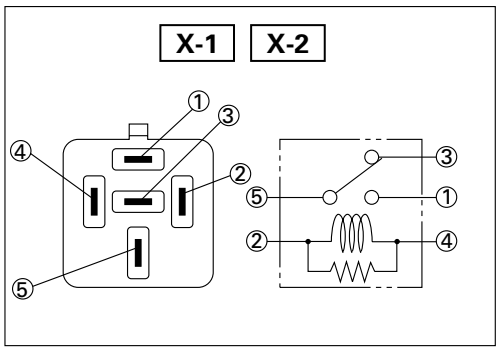

060RV005

LIGHTING RELAY, TAIL RELAY

Check continuity between the relay terminals.

① – ⑤ . . . . . No continuity

(When battery voltage is applied between ② and ④)

① – ⑤ . . . . . Continuity

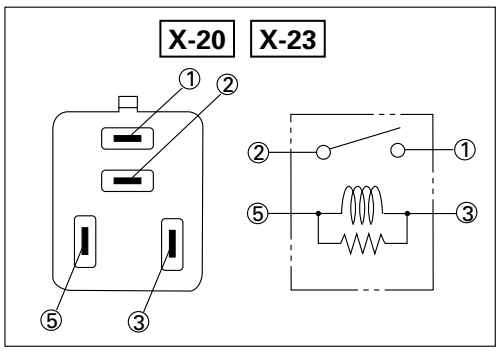

D08RW599

LIGHTING RELAY, TAIL RELAY (6VD1)

Check continuity between the relay terminals.

① – ② . . . . . No continuity

(When battery voltage is applied between ③ and ⑤)

① – ② . . . . . Continuity

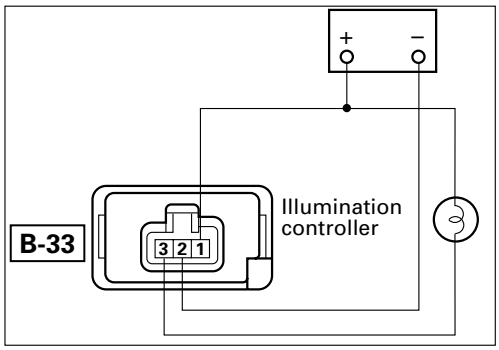

825RV107

ILLUMINATION CONTROLLER

Controller Inspection

Check the illumination controller function.

MEMO

HAZARD WARNING FLASHER, TURN SIGNAL LIGHT, BACK UP LIGHT, HORN AND STOP LIGHT

PARTS LOCATION (LHD)

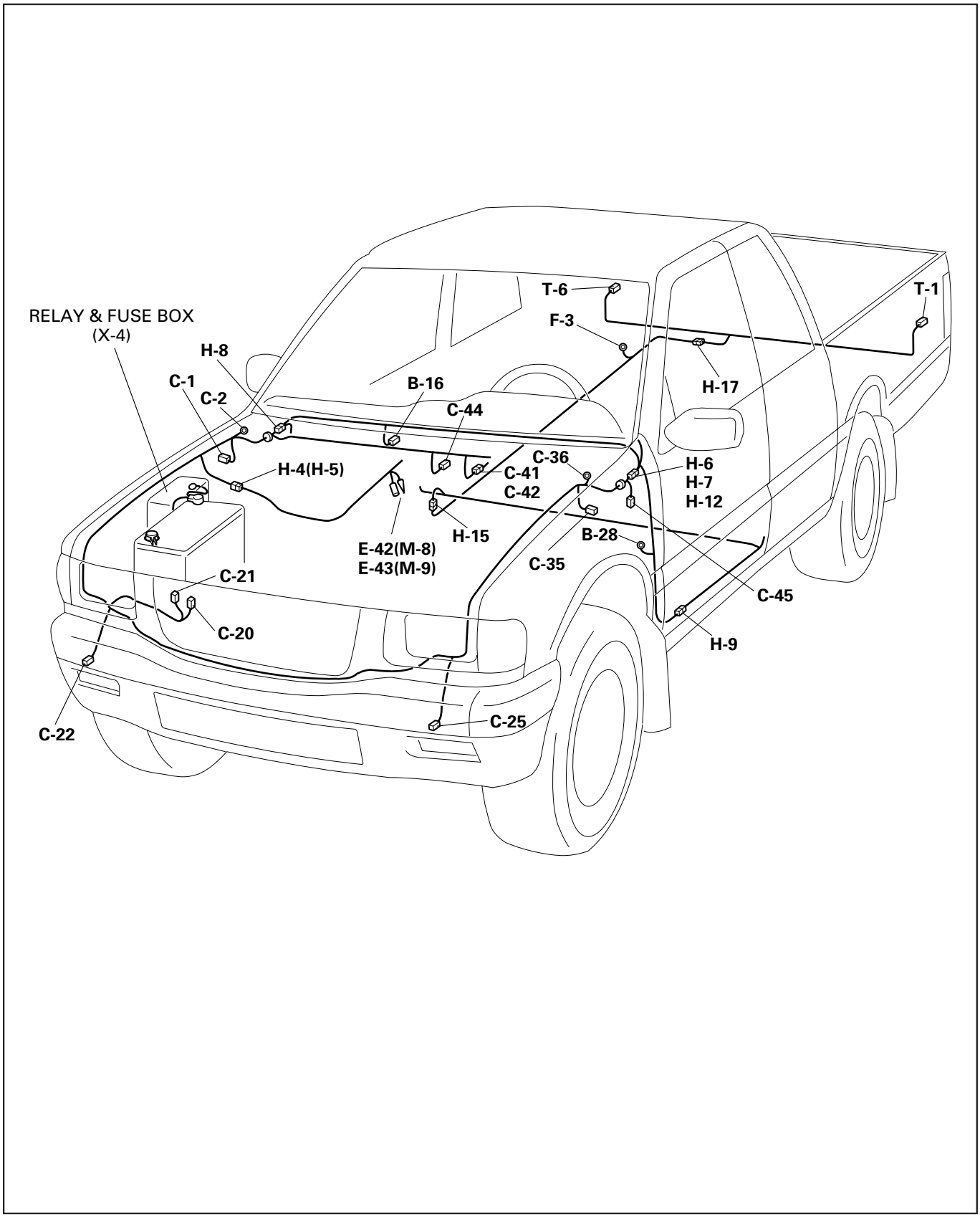

D08RW00005

PARTS LOCATION (RHD)

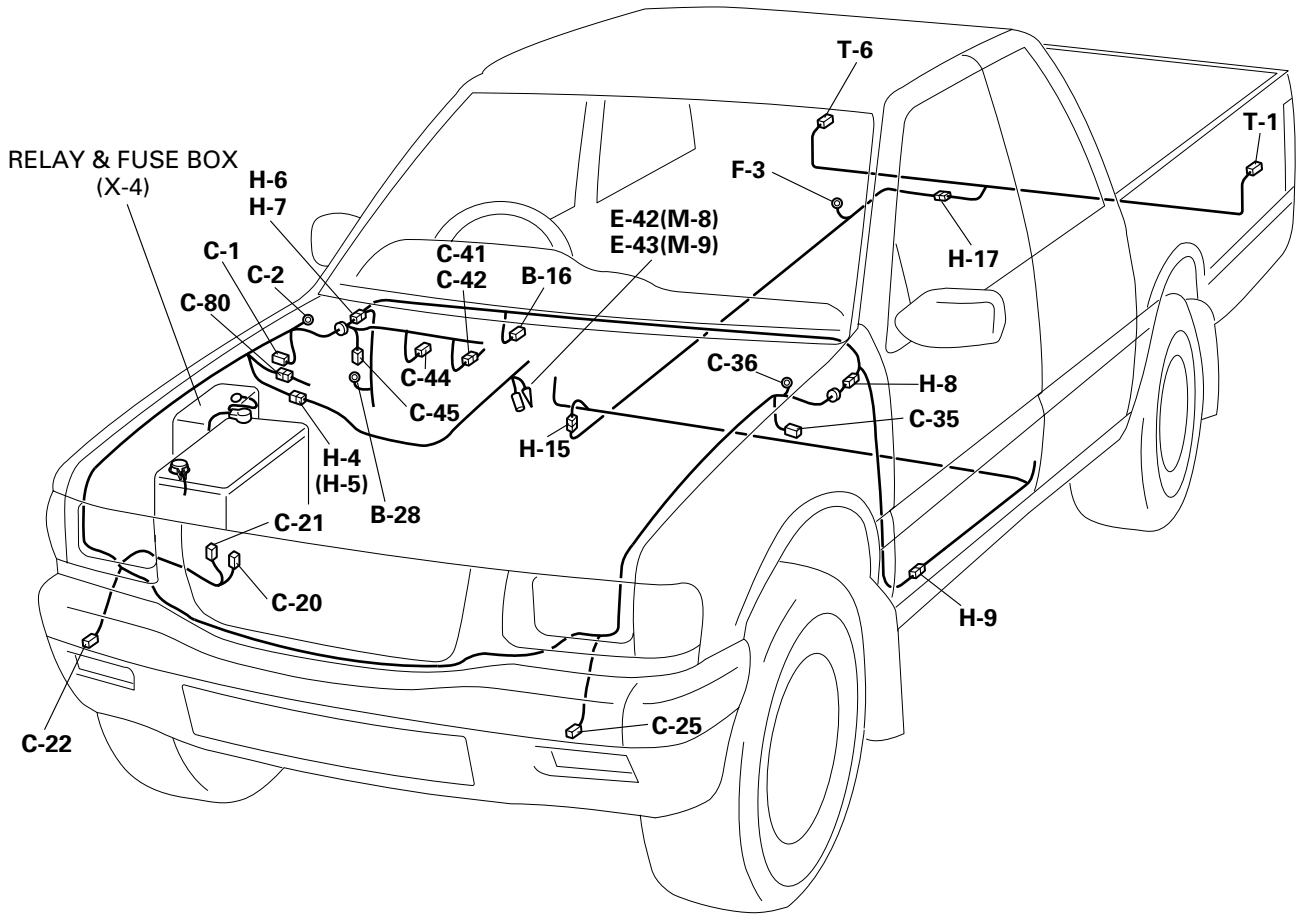

D08RVA29

CIRCUIT DIAGRAM (LHD)

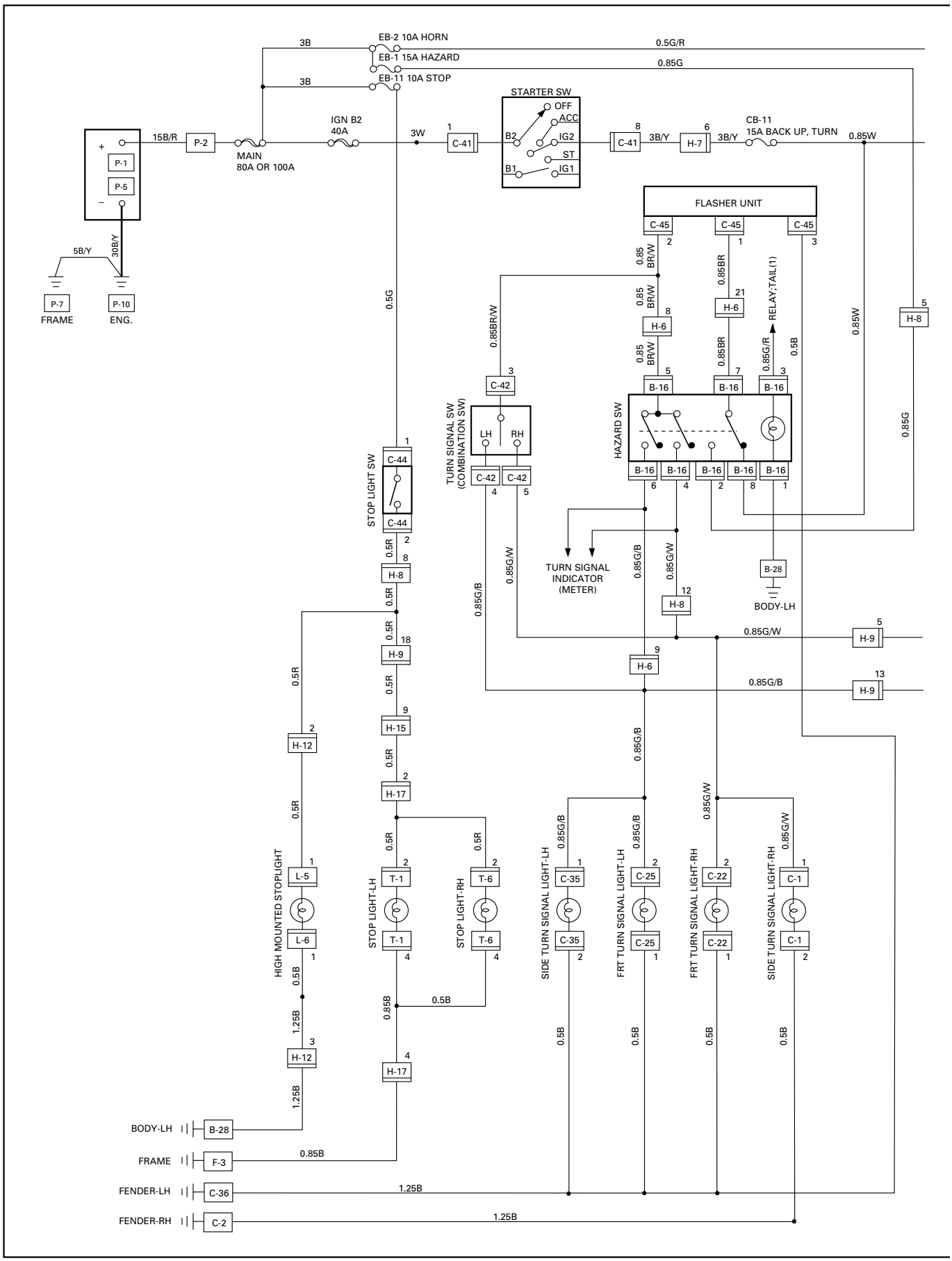

D08RV968

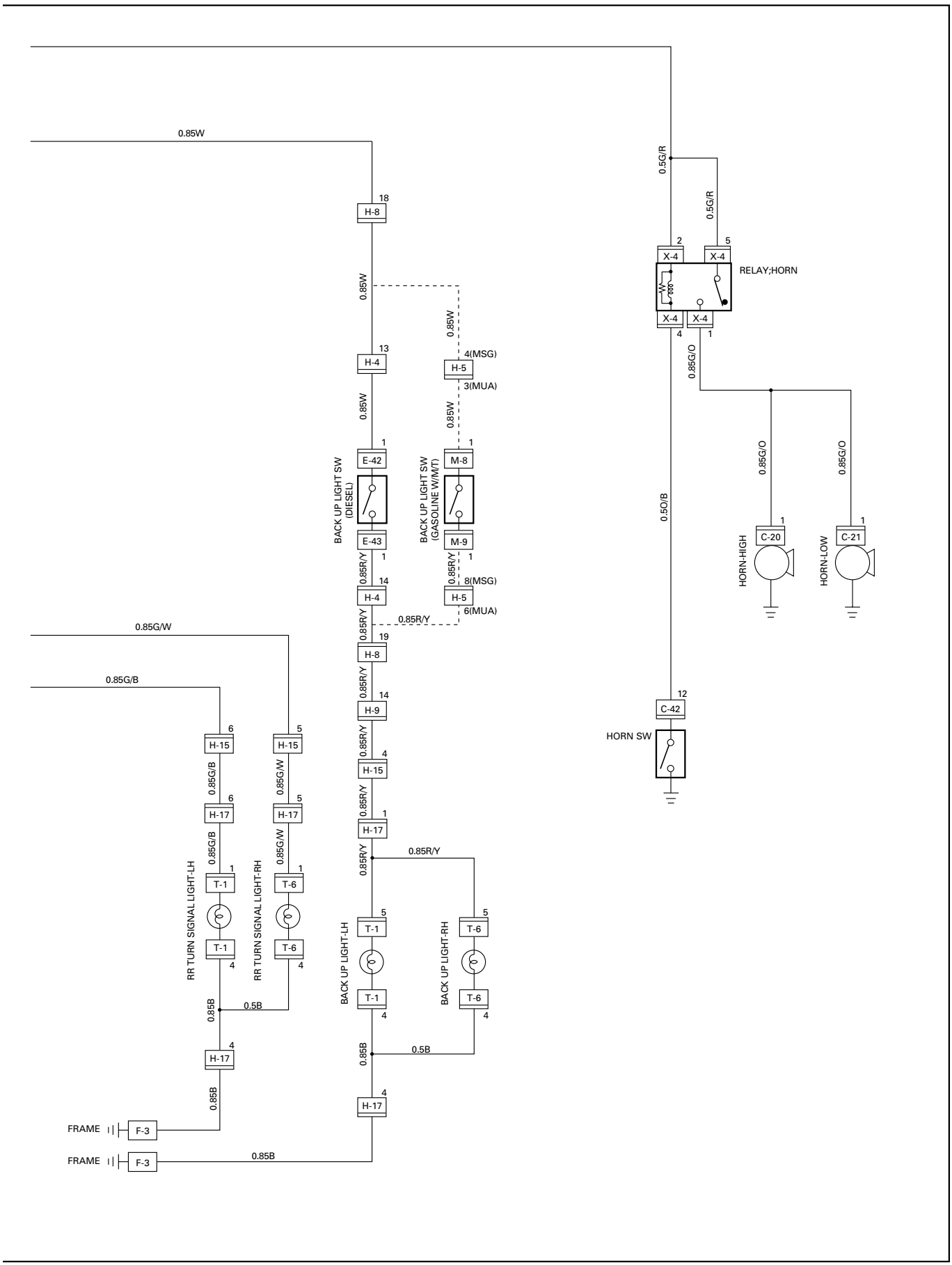
0.85W
H-8
18
0.85W
H-4
13
0.85W
E-42
1
BACK UP LIGHT SW
(DIESEL)
E-43
1
0.85R/Y
H-4
14
0.85R/Y
0.85R/Y
H-5
4(MSG)
3(MUA)
0.85W
M-8
1
BACK UP LIGHT SW
(GASOLINE W/M/T)
M-9
1
0.85R/Y
H-5
8(MSG)
6(MUA)
0.85R/Y
0.5G/R
0.5G/R
X-4
2
X-4
5
RELAY;HORN
X-4
4
X-4
1
0.85G/O
0.85G/O
0.85G/O
C-20
1
HORN-HIGH
C-21
1
HORN-LOW
0.5O/B
C-42
12
HORN SW
0.85G/W
0.85G/B
H-15
6
H-15
5
0.85G/B
0.85G/W
H-17
6
H-17
5
0.85G/B
0.85G/W
T-1
1
T-6
1
RR TURN SIGNAL LIGHT-LH
RR TURN SIGNAL LIGHT-RH
T-1
4
T-6
4
0.85B
0.5B
H-17
4
0.85B
FRAME
F-3
FRAME
F-3
0.85B
H-8
19
0.85R/Y
H-9
14
0.85R/Y
H-15
4
0.85R/Y
H-17
1
0.85R/Y
0.85R/Y
T-1
5
T-6
5
BACK UP LIGHT-LH
BACK UP LIGHT-RH
T-1
4
T-6
4
0.85B
0.5B
H-17
4

D08RV969

CIRCUIT DIAGRAM (6VD1-LHD)

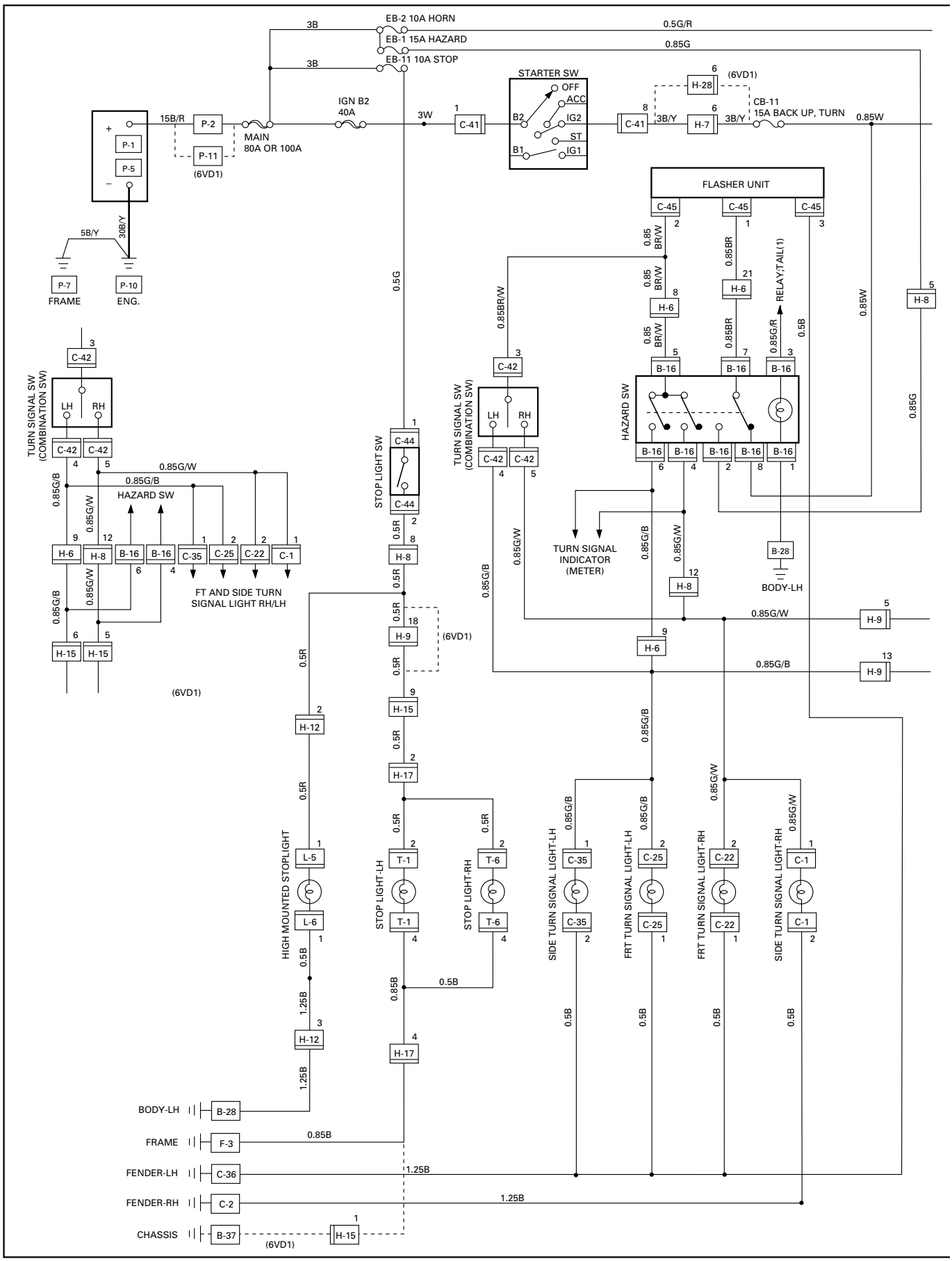

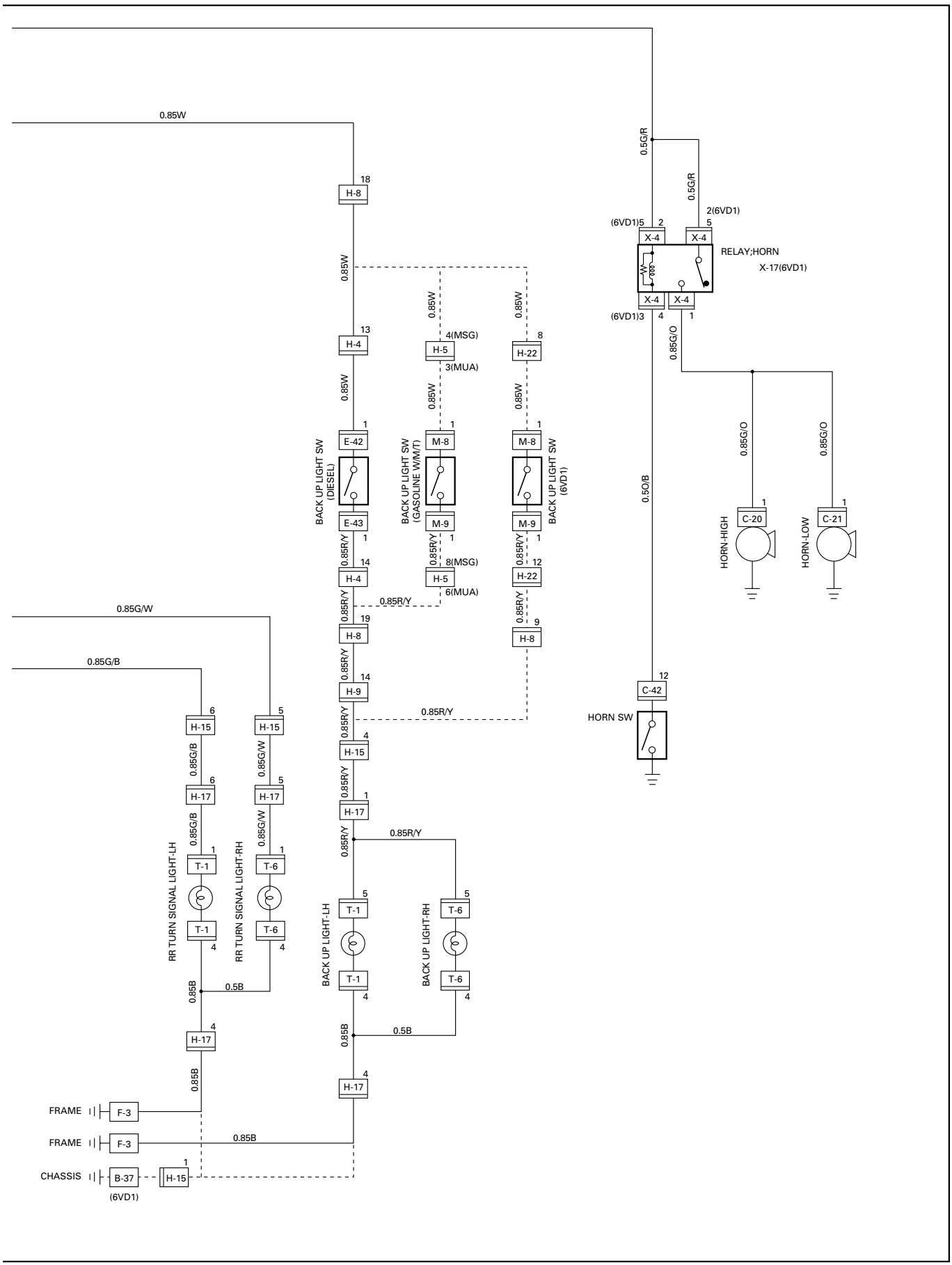
0.85W
18
H-8
0.85W
13
H-4
0.85W
1
E-42
BACK UP LIGHT SW (DIESEL)
E-43
1
0.85R/Y
14
H-4
0.85R/Y
0.85R/Y
19
H-8
0.85R/Y
14
H-9
0.85R/Y
0.85R/Y
4
H-15
0.85R/Y
1
H-17
0.85R/Y
0.85R/Y
0.85W
4(MSG)
H-5
3(MUA)
0.85W
1
M-8
BACK UP LIGHT SW (GASOLINE W/M/T)
M-9
1
0.85R/Y
8(MSG)
H-5
6(MUA)
0.85W
8
H-22
0.85W
1
M-8
BACK UP LIGHT SW (6VD1)
M-9
1
0.85R/Y
12
H-22
0.85R/Y
9
H-8
0.5G/R
0.5G/R
2(6VD1)
(6VD1)5
2
5
X-4
X-4
RELAY;HORN
X-17(6VD1)
X-4
X-4
(6VD1)3
4
1
0.85G/O
0.85G/O
0.85G/O
0.5O/B
1
C-20
HORN-HIGH
1
C-21
HORN-LOW
12
C-42
HORN SW
0.85G/W
0.85G/B
6
H-15
5
H-15
0.85G/B
0.85G/W
6
H-17
5
H-17
0.85G/B
0.85G/W
1
T-1
1
T-6
RR TURN SIGNAL LIGHT-LH
RR TURN SIGNAL LIGHT-RH
T-1
4
T-6
4
0.85B
0.5B
4
H-17
0.85B
FRAME
F-3
FRAME
F-3
0.85B
CHASSIS
B-37
(6VD1)
1
H-15
5
T-1
BACK UP LIGHT-LH
T-1
4
5
T-6
BACK UP LIGHT-RH
T-6
4
0.85B
0.5B
4
H-17

D08RW582

CIRCUIT DIAGRAM (RHD)

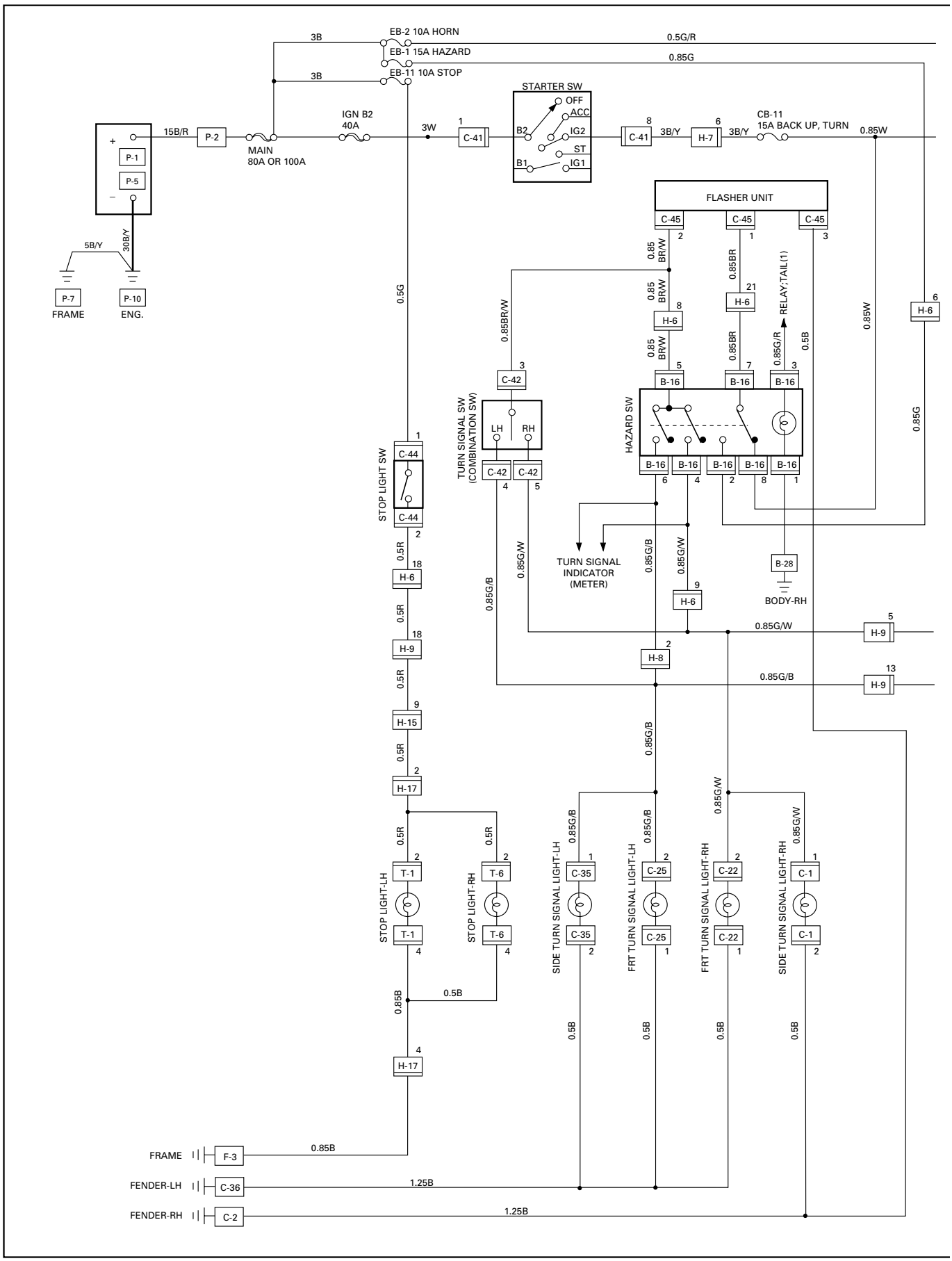

D08RV966

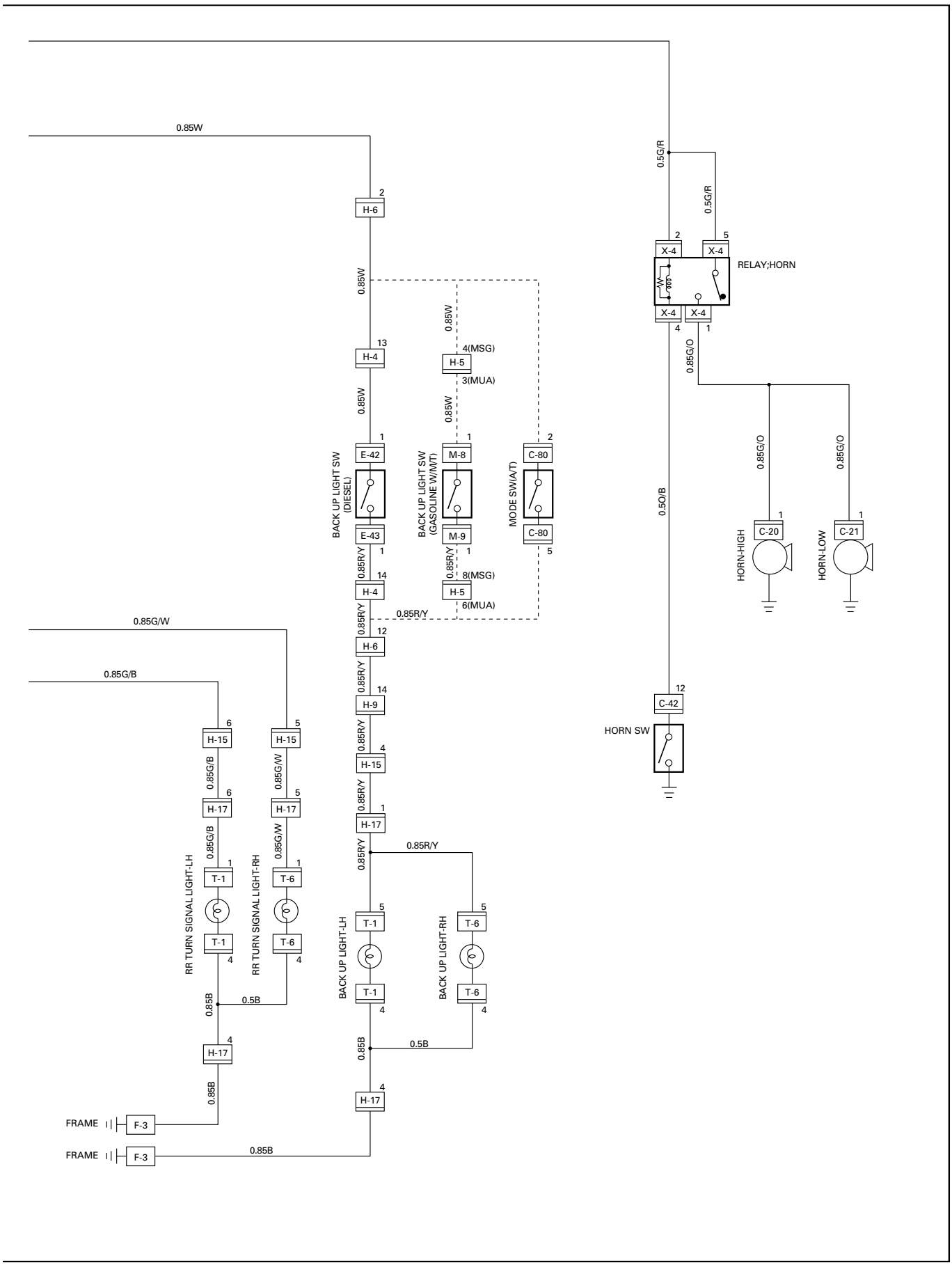
0.85W
H-6
0.85W
H-4
0.85W
E-42
BACK UP LIGHT SW (DIESEL)
E-43
0.85R/Y
H-4
0.85R/Y
0.85W
4(MSG)
H-5
3(MUA)
0.85W
M-8
BACK UP LIGHT SW (GASOLINE W/M/T)
M-9
0.85R/Y
8(MSG)
H-5
6(MUA)
C-80
MODE SW(A/T)
C-80
0.85R/Y
0.85R/Y
H-6
0.85R/Y
H-9
0.85R/Y
H-15
0.85R/Y
H-17
0.85R/Y
0.85R/Y
0.85G/W
0.85G/B
H-15
0.85G/B
H-17
0.85G/B
T-1
RR TURN SIGNAL LIGHT-LH
T-1
0.85B
0.5B
H-15
0.85G/W
H-17
0.85G/W
T-6
RR TURN SIGNAL LIGHT-RH
T-6
0.5B
H-17
0.85B
FRAME
F-3
FRAME
F-3
0.85B
T-1
BACK UP LIGHT-LH
T-1
0.85B
0.5B
T-6
BACK UP LIGHT-RH
T-6
H-17
0.5G/R
0.5G/R
X-4
X-4
RELAY;HORN
X-4
X-4
0.85G/O
0.5O/B
0.85G/O
0.85G/O
C-20
HORN-HIGH
C-21
HORN-LOW
C-42
HORN SW

D08RV967

CIRCUIT DIAGRAM (6VD1-RHD)

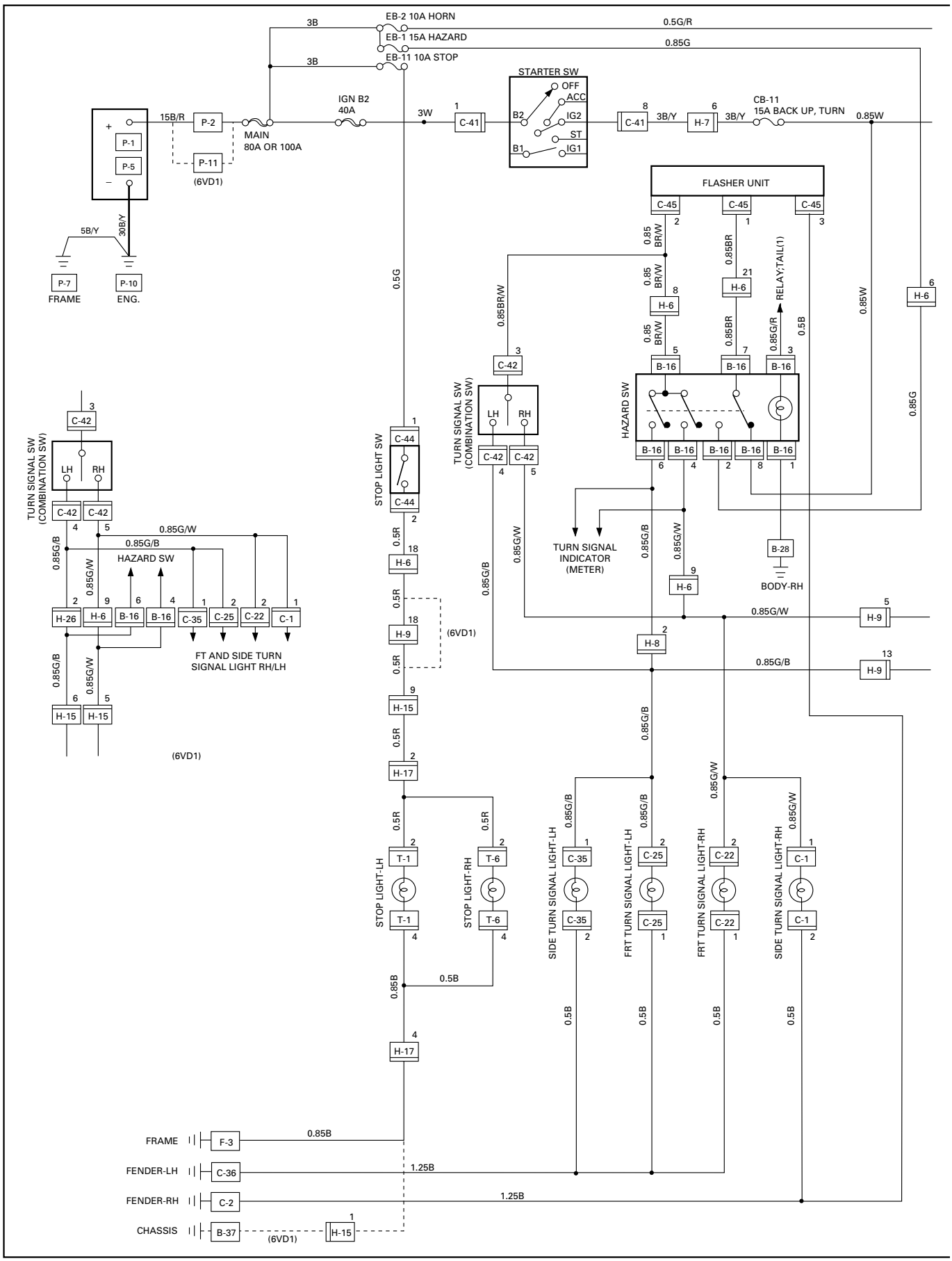

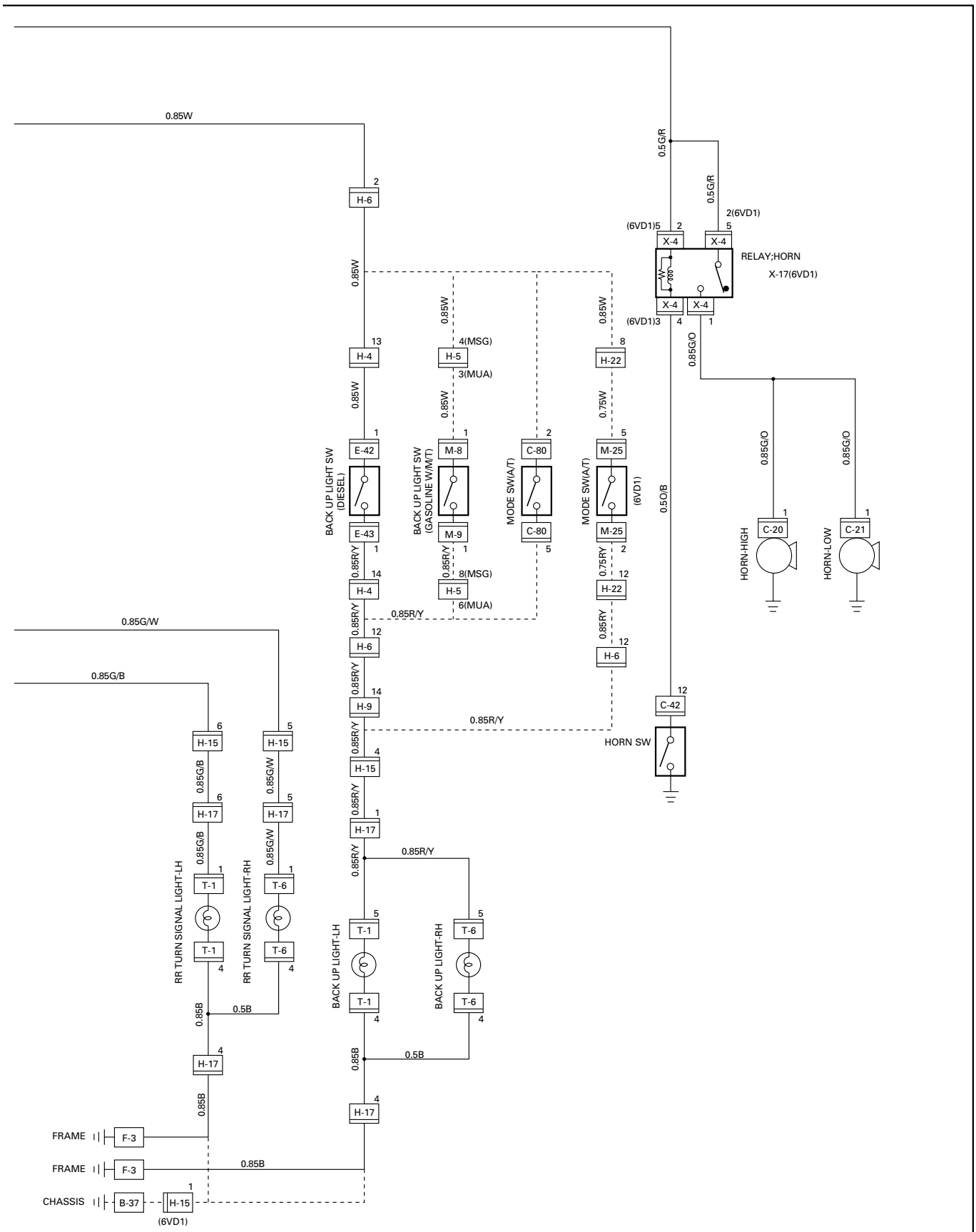
0.85W
H-6
0.85W
H-4
0.85W
E-42
BACK UP LIGHT SW (DIESEL)
E-43
0.85R/Y
H-4
0.85R/Y
H-6
0.85R/Y
H-9
0.85R/Y
H-15
0.85R/Y
H-17
0.85R/Y
0.85R/Y
0.85W
4(MSG)
H-5
3(MUA)
0.85W
M-8
BACK UP LIGHT SW (GASOLINE W/M/T)
M-9
0.85R/Y
8(MSG)
H-5
6(MUA)
C-80
MODE SW(A/T)
C-80
0.85W
H-22
0.75W
M-25
MODE SW(A/T)
(6VD1)
M-25
0.75RY
H-22
0.85RY
H-6
0.5G/R
0.5G/R
2(6VD1)
(6VD1)5
X-4
X-4
RELAY;HORN
X-17(6VD1)
X-4
X-4
(6VD1)3
0.85G/O
0.5O/B
C-42
HORN SW
0.85G/O
C-20
HORN-HIGH
0.85G/O
C-21
HORN-LOW
0.85G/W
0.85G/B
H-15
0.85G/B
H-17
0.85G/B
T-1
RR TURN SIGNAL LIGHT-LH
T-1
0.85B
0.5B
H-17
0.85B
H-15
0.85G/W
H-17
0.85G/W
T-6
RR TURN SIGNAL LIGHT-RH
T-6
0.85R/Y
T-1
BACK UP LIGHT-LH
T-1
0.85B
0.5B
H-17
T-6
BACK UP LIGHT-RH
T-6
FRAME
F-3
FRAME
F-3
0.85B
CHASSIS
B-37
H-15
(6VD1)

D08RW584

TROUBLE SHOOTING

STOPLIGHT AND HIGH MOUNTED STOPLIGHT

1. One side of stoplight does not light

Checkpoint		Trouble Cause	Countermeasure
Stoplight bulb continuity	NG	Burned out bulb or poor connector contact	Replace the bulb or repair connector contact
OK			
LHD: Continuity between 8 H-8 - 2 T-1 (LH) (or 2 T-6 (RH)) RHD: Continuity between 18 H-6 - 2 T-1 (LH) (or 2 T-6 (RH))	NG	Open circuit or poor connector contact	Repair open circuit or connector contact
OK			
Continuity between F-3 - 4 T-1 (LH) (or 4 T-6 (RH))	NG	Open circuit or poor connector contact	Repair open circuit or connector contact

2. Both sides of stoplight do not light

Fuse No. EB-11 (10A, Fuse and Relay box)	NG	Poor fuse contact or blown	Reinstall or replace fuse No. EB-11 (10A)
OK			
Stop light switch (or brake switch) function	NG	Incorrect the switch installation or adjustment	Adjust the switch installation position
OK			
Voltage between 2 T-1 - ground or 2 T-6 - ground with brake pedal depressed (Should be battery voltage present)	NG	Open circuit or poor connector contact between stoplight switch (or brake switch) and stoplight	Repair open circuit or connector contact

3. High mounted stoplight does not light

Checkpoint		Trouble Cause		Countermeasure
Grounding point (B-28)	NG	Poor grounding point contact	—	Repair grounding point (B-28) contact
OK				
Continuity between 1 L-5 - 1 L-6	NG	High mounted stoplight malfunction	—	Repair or replace the high mounted stoplight
OK				
Voltage between 1 L-5 - ground with brake pedal depressed (Should be battery voltage present)	NG	Open circuit or poor connector contact	—	Repair an open circuit or connector contact between 1 L-5 - 8 H-8

TURN SIGNAL LIGHT AND HAZARD WARNING LIGHT

1. Turn signal light does not light on both sides (RH and LH)

Checkpoint		Trouble Cause	Countermeasure
Fuse No. CB-11 (15A, Fuse box)	NG	Poor fuse contact or blown fuse	Reinstall or replace fuse No. CB-11 (15A)
OK			
Short circuit between connector 1 C-45 - 2 C-45 when turn signal switch operates with starter switch in "ON" position (Turn signal light should be ON)	NG	Flasher unit malfunction	Replace the flasher unit
OK			
Continuity between connector 3 C-45 -ground (Should be continuity)	NG	Open circuit or poor connector contact	Repair open circuit or connector contact
OK			
Turn signal switch continuity between connector 3 C-42 - 4 C-42 and 3 C-42 - 5 C-42 when turn signal switch operates	NG	Poor switch point contact or faulty switch	Repair or replace the combination switch

2. Turn signal light does not light on one side (RH or LH)

Turn signal switch continuity	NG	Poor switch point contact or faulty switch	Repair or replace the combination switch
OK			
(RH) Continuity between 2 C-22 - 5 C-42 (FRT), 1 C-1 - 5 C-42 (SIDE) 1 T-6 - 5 C-42 (RR)	NG	Open circuit or poor connector contact	Repair open circuit or connector contact
OK			
(LH) Continuity between 2 C-25 - 4 C-42 (FRT), 1 C-35 - 4 C-42 (SIDE) 1 T-1 - 4 C-42 (RR)	NG	Open circuit or poor connector contact	Repair open circuit or connector contact

3. Hazard warning light does not light

Checkpoint		Trouble Cause		Countermeasure
Fuse No. EB-1 (15A, Relay and fuse box)	NG	Poor fuse contact or blown fuse		Reinstall or replace the fuse No. EB-1 (15A)
OK				
Hazard SW. continuity	NG	Hazard SW. malfunction		Repair or replace the hazard SW.
OK				
Voltage between 2 B-16 - ground (Should be battery voltage present)	NG	Open circuit or poor connector contact between fuse No. EB-1 (15A) – 2 B-16		Repair open circuit or connector contact

4. Flashing rate too fast (One side)

Inspect bulb	NG	Burned out bulb		Replace the bulb or repair open circuit

BACKUP LIGHT

1. Backup light does not light on one side (RH or LH)

Checkpoint		Trouble Cause	Countermeasure
Backup light bulb continuity	NG	Burned out bulb or poor connector contact	Replace the bulb or repair connector contact
OK			
Grounding point	NG	Poor ground contact	Repair grounding point contact

2. Backup light does not light on both sides

Fuse No. CB-11 (15A, Fuse box)	NG	Poor fuse contact or blown fuse	Reinstall or replace fuse No. CB-11 (15A)
OK			
Back up light switch (mode switch) continuity	NG	Poor switch point contact or faulty switch	Repair or replace the switch
OK			
Voltage between 5 T-1 (5 T-6) - ground with starter switch ON and shift lever into reverse position (Should be battery voltage present)	NG	Open circuit or poor connector contact	Repair open circuit or connector contact

HORN

1. Both sides of horn do not sound

Checkpoint		Trouble Cause	Countermeasure
Fuse No EB-2 (10A, Relay and fuse box)	NG	Poor fuse contact or blown fuse	Reinstall or replace fuse No. EB-2 (10A)
OK			
Grounding point	NG	Poor ground contact	Repair the grounding point
OK			
Horn relay	NG	Poor relay contact or faulty horn relay	Reinstall or replace the horn relay
OK			
Voltage between connector 2 X-4 - ground or 5 X-4 - ground (Should be battery voltage present)	NG	Open circuit or poor connector contact between fuse No. EB-2 (10A) and horn relay	Repair open circuit or reconnect the connector
OK			
Remove steering pad and steering wheel			
Horn switch continuity	NG	Poor switch point contact or faulty switch	Repair or replace the horn switch
OK			
Continuity between 4 X-4 - 12 C-42 1 X-4 - 1 C-20 (1 C-21)	NG	Open circuit or poor connector contact	Repair open circuit or connector contact

2. One side of horn does not blow

Checkpoint		Trouble Cause		Countermeasure
Horn continuity between connectors	NG	Faulty horn assembly	—	Replace the horn assembly
OK				
Voltage between 1 C-20 (1 C-21)- ground with horn switch depressed (Should be battery voltage present)	NG	Open circuit or poor connector contact	—	Repair open circuit or reconnect the connector

3. Insufficient horn volume

Battery condition	NG	Discharged battery	—	Recharge or replace the battery
OK				
Horn	NG	Stain or foreign material in the horn	—	Clean and/or remove the foreign material

REMOVAL AND INSTALLATION

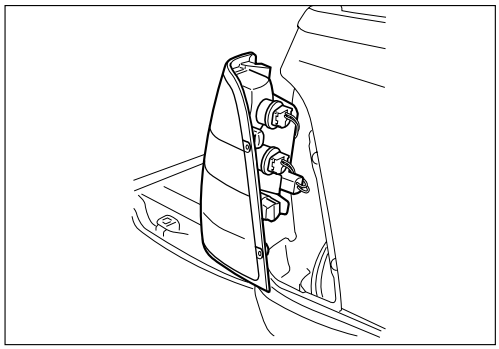

D08RV751

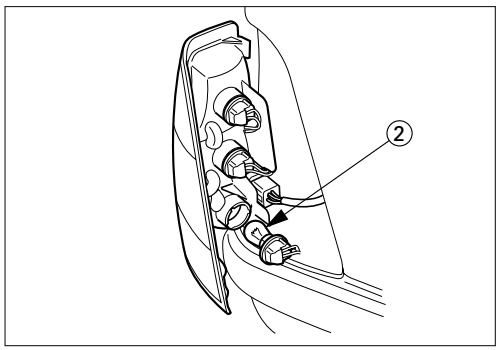

D08RV887

REAR COMBINATION LIGHT

Stoplight

Removal

1. Open the rear gate.
2. Remove the screws of rear combination light.
3. Remove the rear combination light assembly.
4. Turn the bulb ② counterclockwise to remove it.

Installation

Follow the removal procedure in the reverse order to install the rear combination light.

Pay close attention to the important points mentioned in the following paragraphs.

Bulb

Be absolutely sure that each bulb is correctly installed.

This will prevent a poor contact and an open circuit.

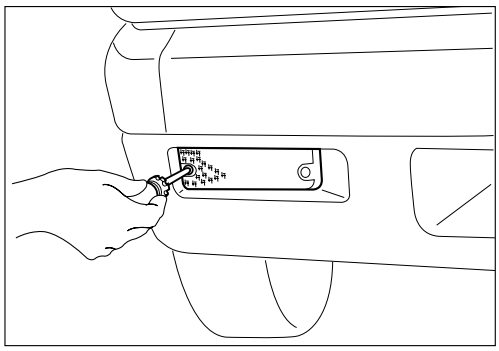

D08RV862

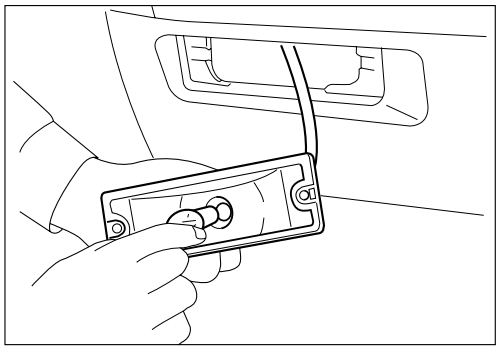

D08RV863

FRONT TURN LIGHT

Removal

1. Remove the front turn light lens.
2. Pull the light housing free.
3. Push the bulb in and turn it counterclockwise to remove it from the light housing.

Installation

Follow the removal procedure in the reverse order to install the front turn light.

Pay close attention to the important points mentioned in the following paragraphs.

Bulb

Be absolutely sure that the front turn light bulb is correctly installed.

This will prevent a poor contact and an open circuit.

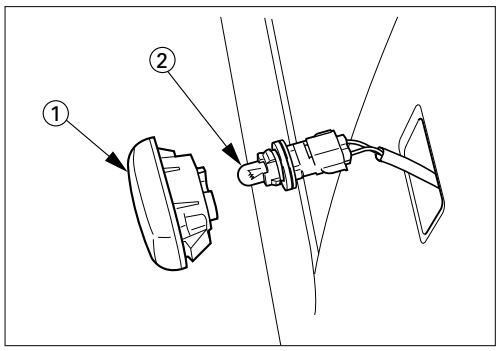

D08RV750

SIDE TURN LIGHT

Removal

1. Remove the lens ①.
   - Pull the light/bulb toward you while pushing the light housing in the rear direction of the vehicle to release its lock.
   - Remove the socket by turning it counterclockwise.
2. Pull the bulb ② to remove it.

Installation

Follow the removal procedure in the reverse order to install the side turn light.

Pay close attention to the important points mentioned in the following paragraphs.

Bulb

Be absolutely sure that the side turn light bulb is correctly installed.

This will prevent a poor contact and an open circuit.

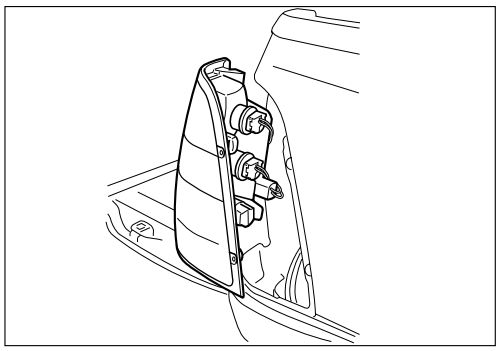

D08RV751

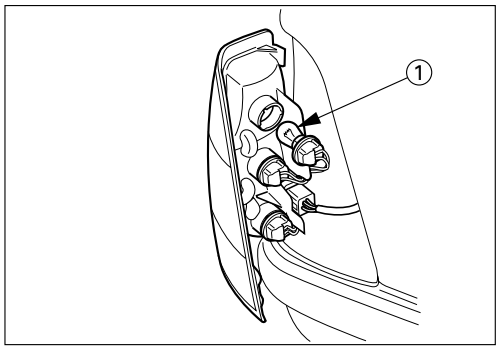

D08RV752

REAR COMBINATION LIGHT

Turn Signal Light

Removal

1. Open the rear gate.
2. Remove the screws.
3. Remove the rear combination light assembly.
4. Turn the bulb ① counterclockwise to remove it.

Installation

Follow the removal procedure in the reverse order to install the rear combination light.

Pay close attention to the important points mentioned in the following paragraphs.

Bulb

Be absolutely sure that the rear combination light bulb is correctly installed.

This will prevent a poor contact and an open circuit.

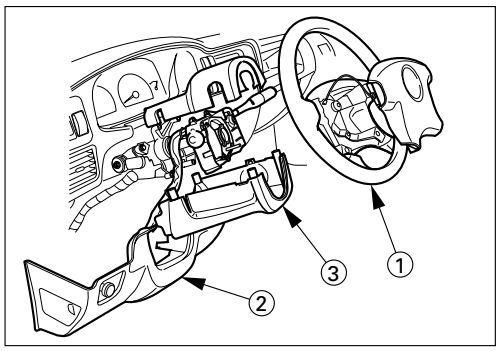

D08RV888

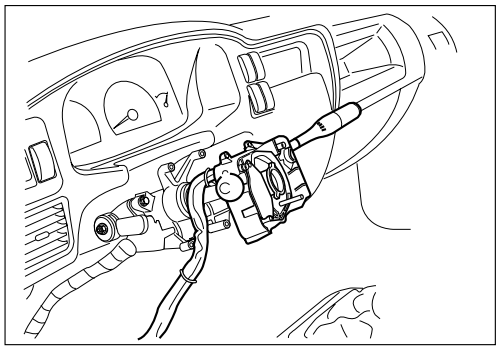

D08RV747

TURN SIGNAL SWITCH

Removal

1. Remove the steering wheel ①.
   Refer to the "STEERING" Section of this Manual.
2. Remove the instruments panel lower cover ②.
3. Remove the steering column cover ③.
4. Disconnect the connector.
5. Remove the turn signal switch from the steering shaft.

Installation

Follow the removal procedure in the reverse order to install the turn signal switch (lever).

Pay close attention to the important points mentioned in the following paragraphs.

Connector

Be absolutely sure that the turn signal switch connector is securely connected.

This will prevent a poor contact and at an open circuit.

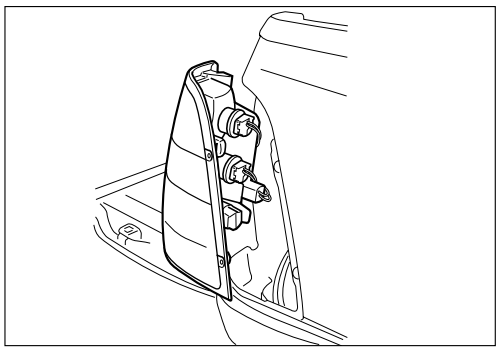

D08RV751

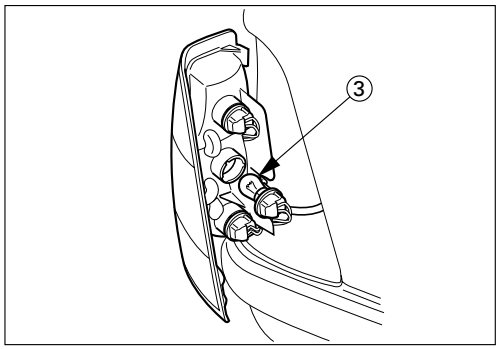

D08RV886

REAR COMBINATION LIGHT

Back Up Light

Removal

1. Open the rear gate.
2. Remove the screws.
3. Remove the rear combination light assembly.
4. Turn the bulb ③ counterclockwise to remove it.

Installation

Follow the removal procedure in the reverse order to install the rear combination light.

Pay close attention to the important points mentioned in the following paragraphs.

Bulbs

Be absolutely sure that each bulb is correctly installed.

This will prevent a poor contact and an open circuit.

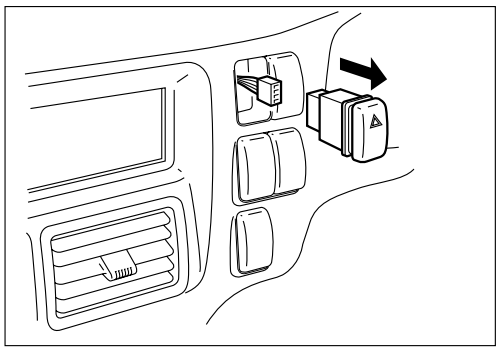

D08RV893

HAZARD WARNING FLASHER SWITCH

Removal

1. **Instrument Panel Cluster Assembly**
   - Refer to Section 10 “BODY” for instrument panel cluster assembly removal steps.
2. **Hazard Warning Switch**
   - Disconnect the switch connector.
   - To remove the switch, push the lock from the back side of the cluster assembly.

Installation

To install, follow the removal procedure in the reverse order.

Connector

Be absolutely sure that the hazard warning flasher switch connector is securely connected.

This will prevent a poor contact and an open circuit.

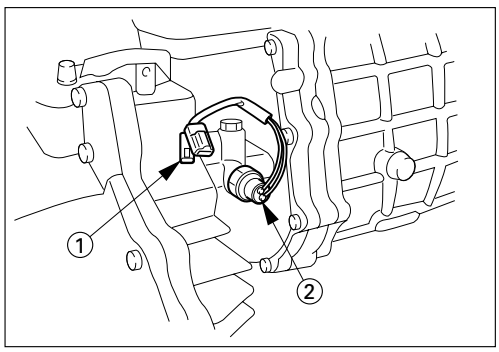

D08RV867

BACK UP LIGHT SWITCH

Removal

1. Disconnect the connector ①.
2. Remove the back up light switch from the transmission ②.

Installation

Follow the removal procedure in the reverse order to install the back up light switch.

Pay close attention to the important points mentioned in the following paragraphs.

Back up Light Switch Threads

Apply liquid gasket to the threaded portion and install the back up light switch.

Connector

Be absolutely sure that the back up light connector is securely connected.

This will prevent a poor contact and an open circuit.

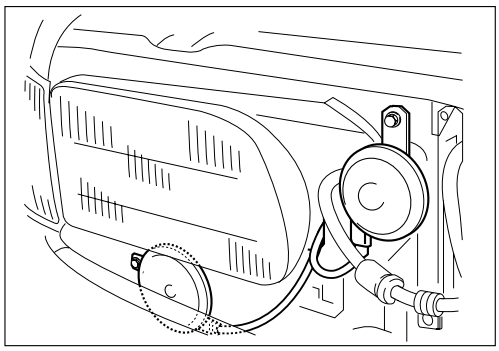

D08RV878

HORN

Removal

1. Remove the radiator grille.
   Refer to the “HEADLIGHT” removal procedure.
2. Loosen the horn bolt.
3. Disconnect the horn connector.

Installation

Follow the removal procedure in the reverse order to install the horn.

Pay close attention to the important points mentioned in the following paragraphs.

Connector

Be absolutely sure that the horn connector is securely connected.

This will prevent a poor contact and an open circuit.

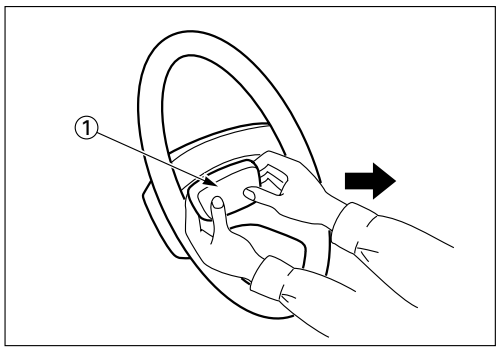

D08RV870

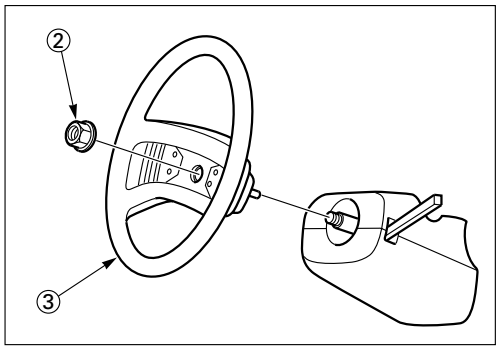

D08RV871

HORN SWITCH

Removal

1. Remove the horn pad ①.
2. Remove the steering wheel nut ②.
3. Remove the steering wheel ③.
4. Remove the horn switch.

Installation

Follow the removal procedure in the reverse order to install the horn switch.

Pay close attention to the important points mentioned in the following paragraphs.

Steering Wheel Nut (②)

Tighten the nut to the specified torque.

Steering Wheel Nut Torque	kg·m (lb·ft/N·m)
3.5 ± 0.5 (25.3 ± 3.6/34.3 ± 4.9)	

INSPECTION AND REPAIR

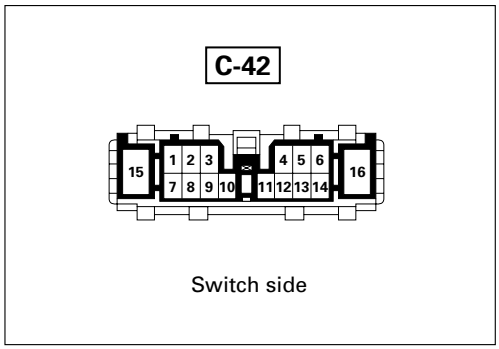

TURN SIGNAL SWITCH

Lighting Switch Connections

SW position \ Terminal No.		3	4	5
Turning direction	Left	○	○	
	↕	X		X
	Neutral			
	↕	X	X	
	Right	○		○

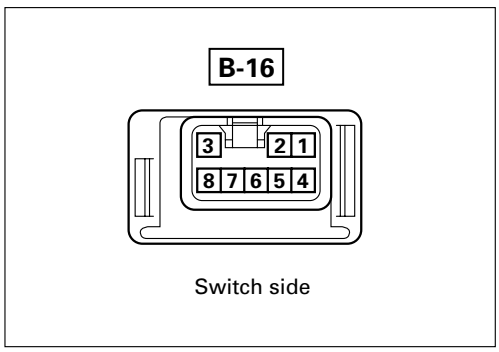

HAZARD WARNING FLASHER SWITCH

Hazard Warning Flasher Switch Connections

SW position \ Terminal No.	4	5	6	7	8	2	1	3
ON	○	○	○	○		○		
OFF				○	○			

DOME LIGHT, SPOT LIGHT AND WARNING BUZZER

PARTS LOCATION (LHD)

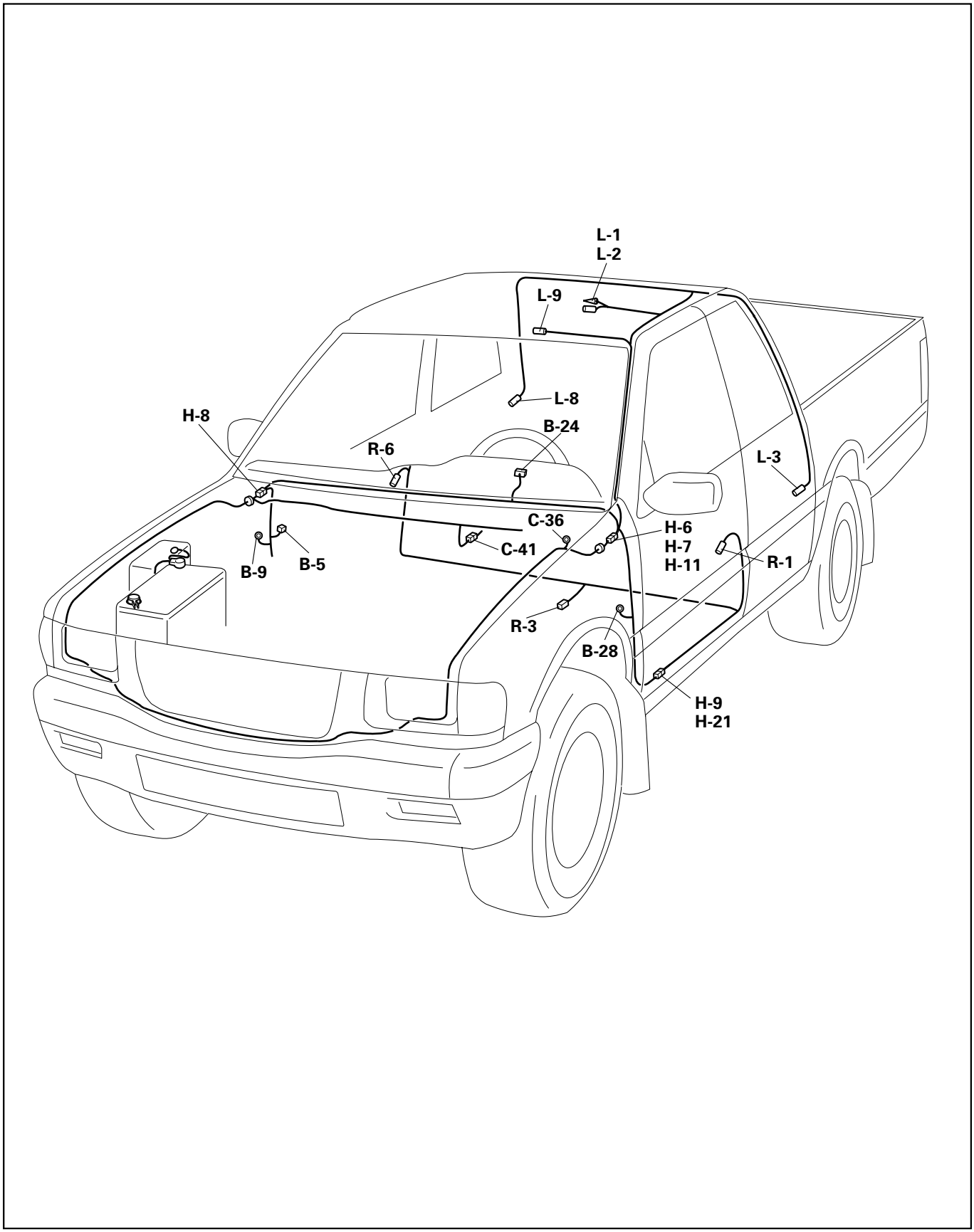

D08RVA31

PARTS LOCATION (RHD)

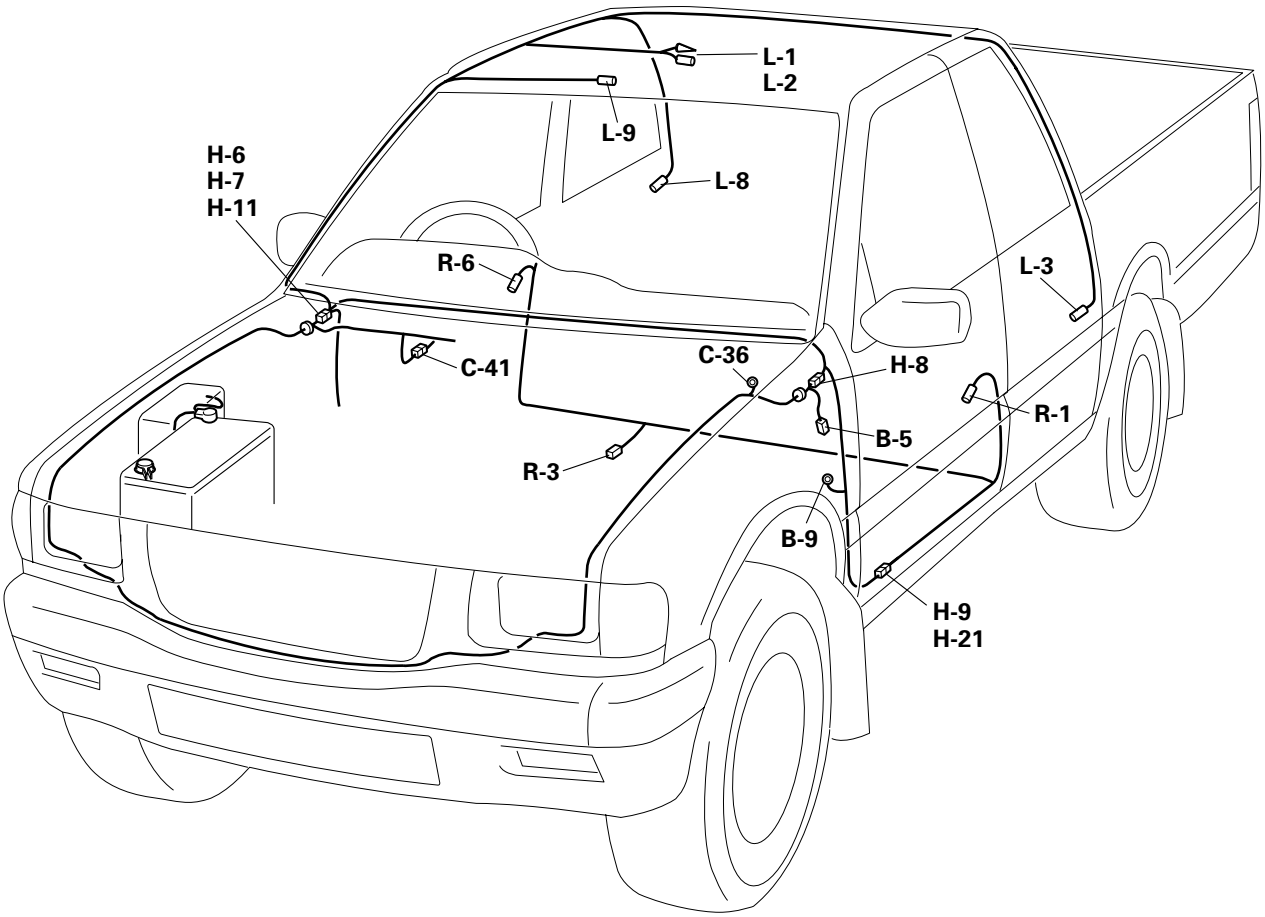

D08RVA32

CIRCUIT DIAGRAM (LHD & RHD)

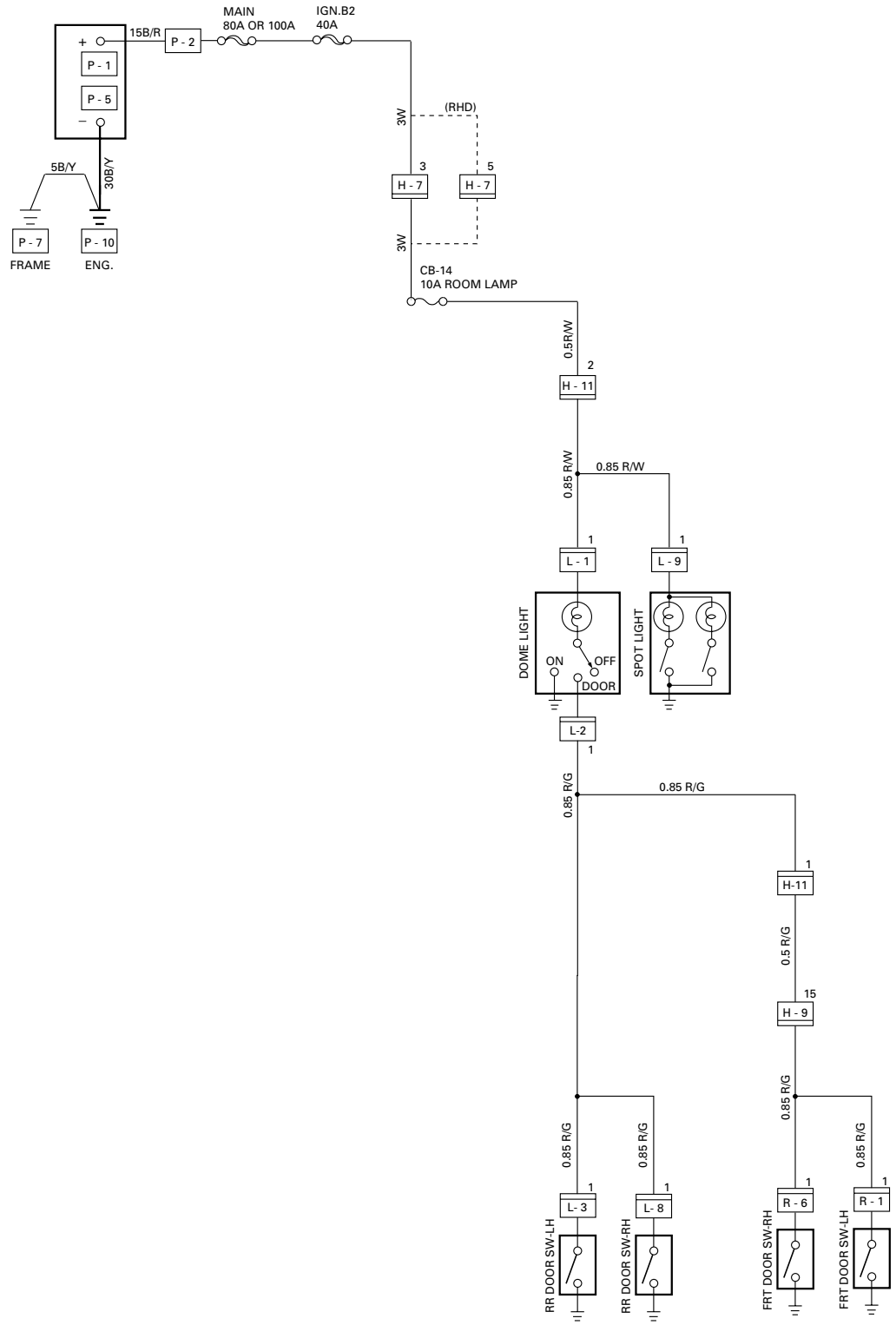

D08RV970

CIRCUIT DIAGRAM (LHD – SAUDI ARABIA)

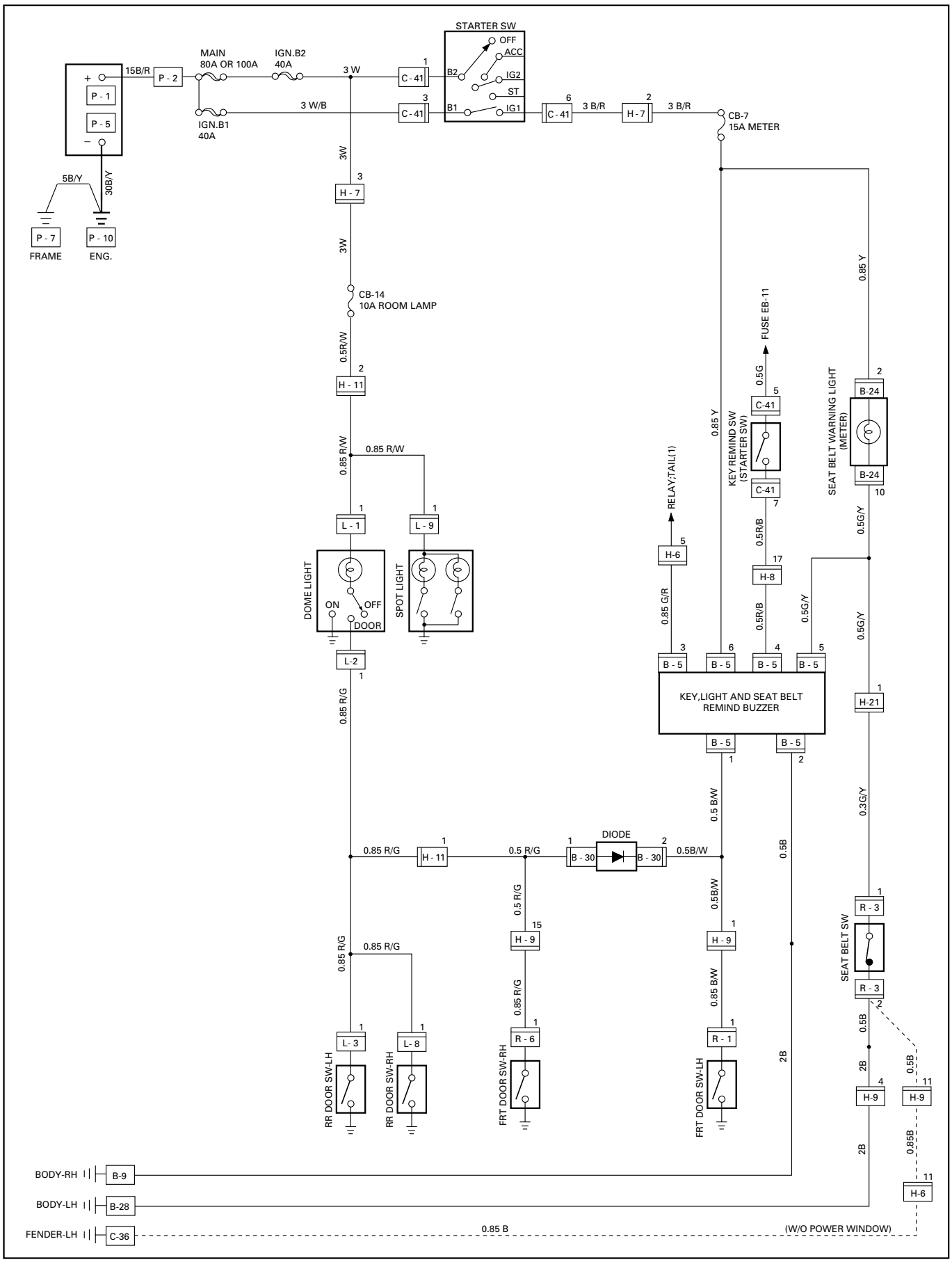

D08RV971

CIRCUIT DIAGRAM (RHD – SOUTH AFRICA)

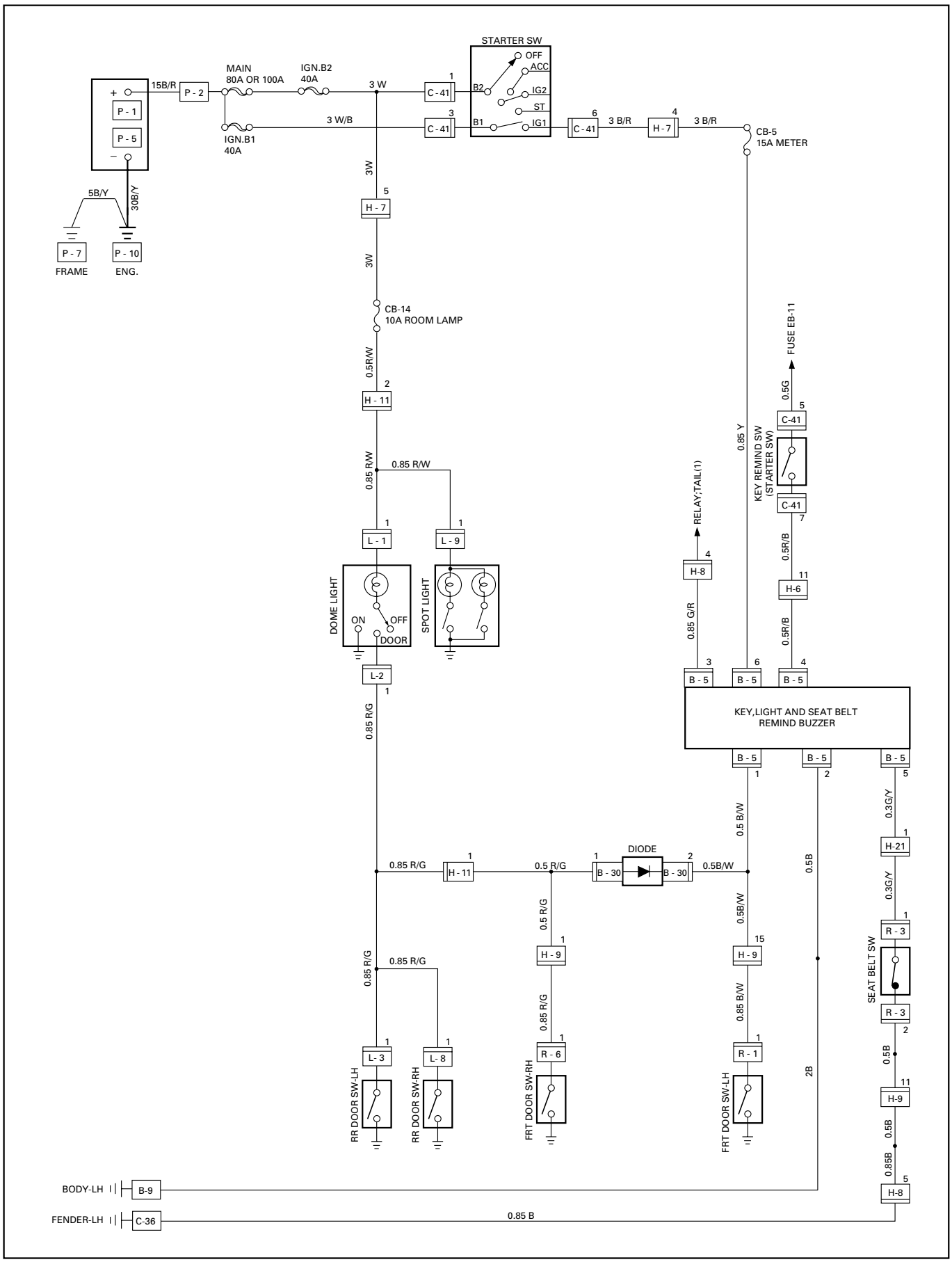

D08RV972

TROUBLE SHOOTING

1. Dome light does not light

Checkpoint		Trouble Cause	Countermeasure
Dome light bulb continuity	NG	Burned out the bulb	Replace the dome light bulb
OK			
Dome light switch function	NG	Switch malfunction	Repair or replace the dome light assembly
OK			
Continuity between connector 2 [H-11] - 1 [L-1]	NG	Open circuit or poor connector contact	Repair open circuit or connector contact

2. Dome light does not go out

Door switch function (Both side)	NG	Switch malfunction or foreign material in switch	Repair or replace the door switch
OK			
Continuity between connector 1 [L-2] -ground when shutting the door (Should be no continuity)	NG	Short circuit	Repair short circuit or connector contact

REMOVAL AND INSTALLATION

DOME LIGHT

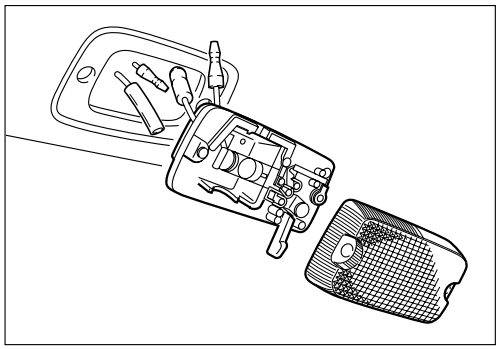

D08RV872

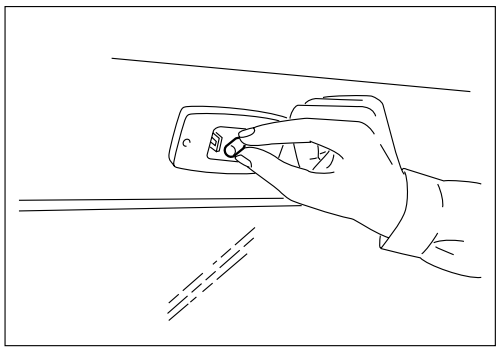

D08RV873

Removal

1. Remove the dome light cover free.
2. Pull the bulb to remove it.

Installation

Follow the removal procedure in the reverse order to install the dome light.

Pay close attention to the important points mentioned in the following paragraphs.

Bulb

Be absolutely sure that the dome light bulb is correctly installed.

This will prevent a poor contact and an open circuit.

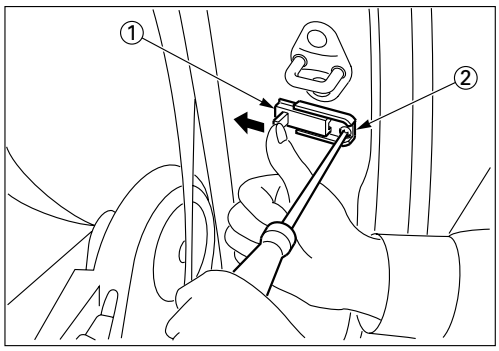

D08RV874

DOOR SWITCH

Removal

1. Push the door switch sliding portion ① in the direction of the arrow in the illustration.
2. Loosen the screw ②.
3. Pull the switch free to remove it.
4. Disconnect the door switch connector.

Installation

Follow the removal procedure in the reverse order to install the spot light.

Pay close attention to the important points mentioned in the following paragraphs.

Connector

Be absolutely sure that the door switch connector is securely connected.
This will prevent a poor contact and an open circuit.

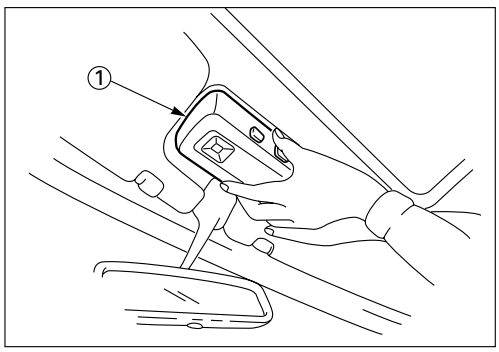

D08RV875

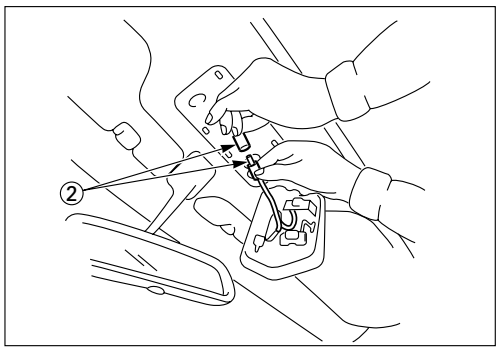

D08RV876

SPOT LIGHT

Removal

1. Grasp the spot light housing ① with both hands.
   Pull the housing straight down.
   This will release the clip.
2. Disconnect the connector ②.
3. Push the bulb in and turn it counterclockwise to remove it.

Installation

Follow the removal procedure in the reverse order to install the spot light.

Pay close attention to the important points mentioned in the following paragraphs.

Connector

Be absolutely sure that the spot light connector is securely connected.

This will prevent a poor contact and an open circuit.

Bulb

Be absolutely sure that the spot light bulb is correctly installed.

This will prevent a poor contact and an open circuit.

WARNING BUZZER

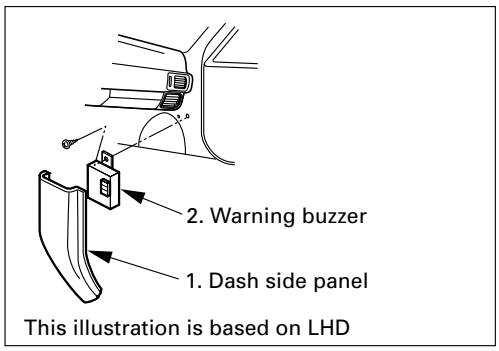

This illustration is based on LHD

825RV105

Removal

1. **Dash Side Panel**
2. **Warning Buzzer**
   - Disconnect the connector.
   - Remove the screw.

Installation

Follow the removal procedure in the reverse order to install the warning buzzer.

Pay close attention to the important points mentioned in the following paragraphs.

Connector

Be absolutely sure that the warning buzzer connector is securely connected.

This will prevent a poor contact and an open circuit.

INSPECTION AND REPAIR

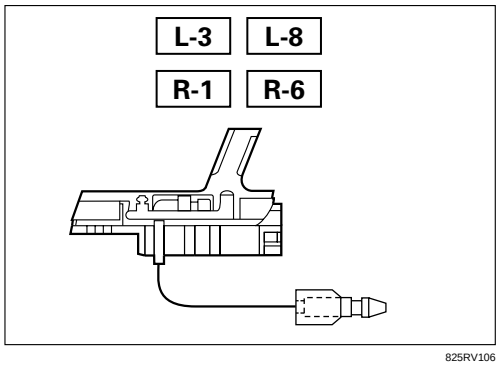

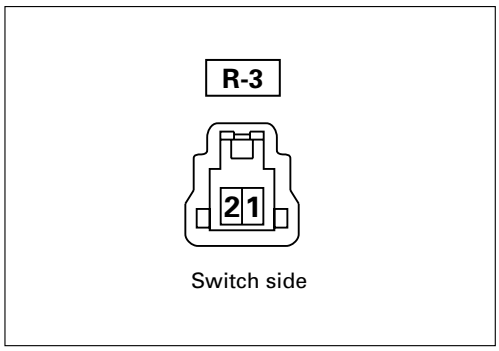

DOOR SWITCH

Door Switch Connections

Connector No. / SW position / Terminal No.	L-3 L-8 R-1 R-6	
	1	Body Ground
PUSHED		
RELEASED	○	○

SEAT BELT SWITCH (SAUDI ARABIA, SOUTH AFRICA)

Seat Belt Switch Connections

Connector No. / SW position / Terminal No.	R-3	
	1	2
ON (Belt tongue removed)	○	○
OFF (Belt tongue inserted)		

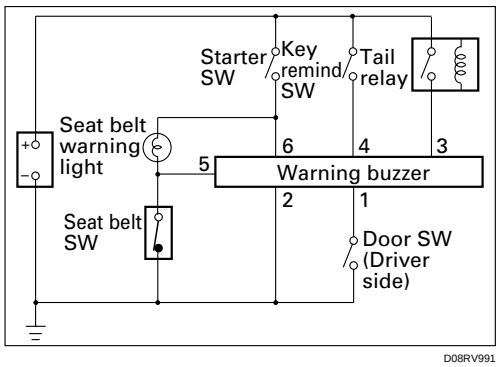

WARNING BUZZER (SAUDI ARABIA)

1. Warning Buzzer Circuit

Warning function	Operational conditions
Fasten the seat belt	The warning light in the meter assembly turned on about 6 seconds from the moment the starter switch is turned on.
	The buzzer sounds for about 6 seconds when the starter switch is turned on with the seat belt switch on (when the seat belt is not used).
Key left in starter switch	The buzzer sounds when both the key remind switch and the FRT door switch-LH are turned on. To stop the sound of the buzzer, turn on the starter switch.
Taillights left on	The buzzer sounds when the starter switch is turned from the “on” to “off” position while the taillights are on.

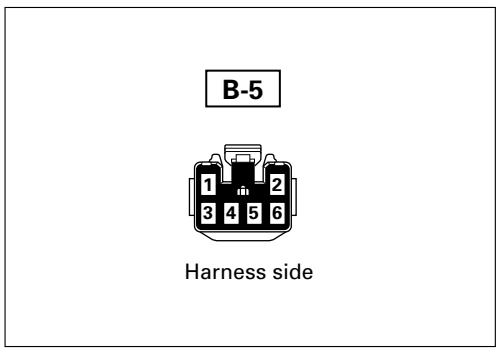

2. Warning Buzzer Harness Side Connector Circuit

Disconnect the warning buzzer connector and check continuity and voltage between the warning buzzer harness side connector terminals.

Terminal No.	Wire color	Connecting to	Check item	Connecting terminal	Check condition		Standard
5	G/Y	Seat belt SW	Continuity	5-Ground	Seat belt	Unfasten	Continuity
						Fasten	No continuity
3	G/R	Tail relay	Voltage	3-Ground	Lighting SW “ON”		Approx. 12V
4	R/B	Key remind SW (Starter SW)		4-Ground	Key	Insert	Approx. 12V
						Remove	0V
6	Y	Fuse CB-7		6-Ground	Starter SW “ON”		Approx. 12V
1	B/W	Door SW (FRT-LH)	Continuity	1-Ground	FRT door-LH	Open	Continuity
						Close	No continuity
2	B	Ground		2-Ground	—		Continuity

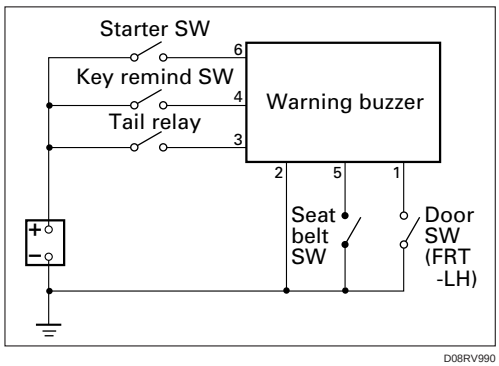

WARNING BUZZER (SOUTH AFRICA)

1. Warning Buzzer Circuit

Warning function	Operational conditions
Fasten the seat belt	The buzzer sounds when the starter switch is turned on with the seat belt switch on (when the seat belt is not used).
Key left in starter switch	The buzzer sounds when both the key remind switch and the FRT door switch-LH are turned on. To stop the sound of the buzzer, turn on the starter switch.
Taillights left on	The buzzer sounds when the starter switch is turned from the “on” to “off” position while the taillights are on.

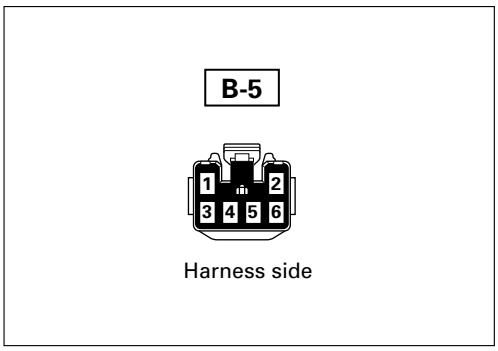

2. Warning Buzzer Harness Side Connector Circuit

Disconnect the warning buzzer connector and check continuity and voltage between the warning buzzer harness side connector terminals.

Terminal No.	Wire color	Connecting to	Check item	Connecting terminal	Check condition		Standard
5	G/Y	Seat belt SW	Continuity	5-Ground	Seat belt	Unfasten	Continuity
						Fasten	No continuity
3	G/R	Tail relay	Voltage	3-Ground	Lighting SW “ON”		Approx. 12V
4	R/B	Key remind SW (Starter SW)		4-Ground	Key	Insert	Approx. 12V
						Remove	0V
6	Y	Fuse CB-5		6-Ground	Starter SW “ON”		Approx. 12V
1	B/W	Door SW (FRT-LH)	Continuity	1-Ground	FRT door-LH	Open	Continuity
						Close	No continuity
2	B	Ground		2-Ground	—		Continuity

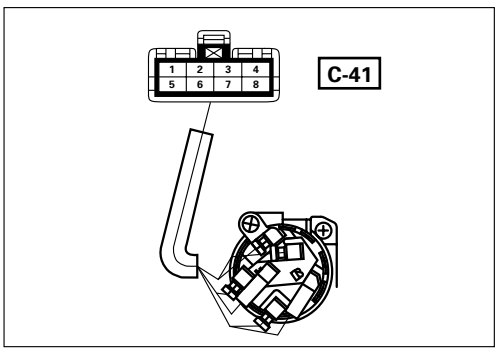

KEY REMIND SWITCH (STARTER SWITCH)

Switch Connections

Starter switch key position \ Connector No. / Terminal No.		C-41	
		5	7
LOCK	Removed		
OFF	Inserted	○	○
ACC			
ON			
START			

WINDSHIELD WIPER AND WASHER

PARTS LOCATION (LHD)

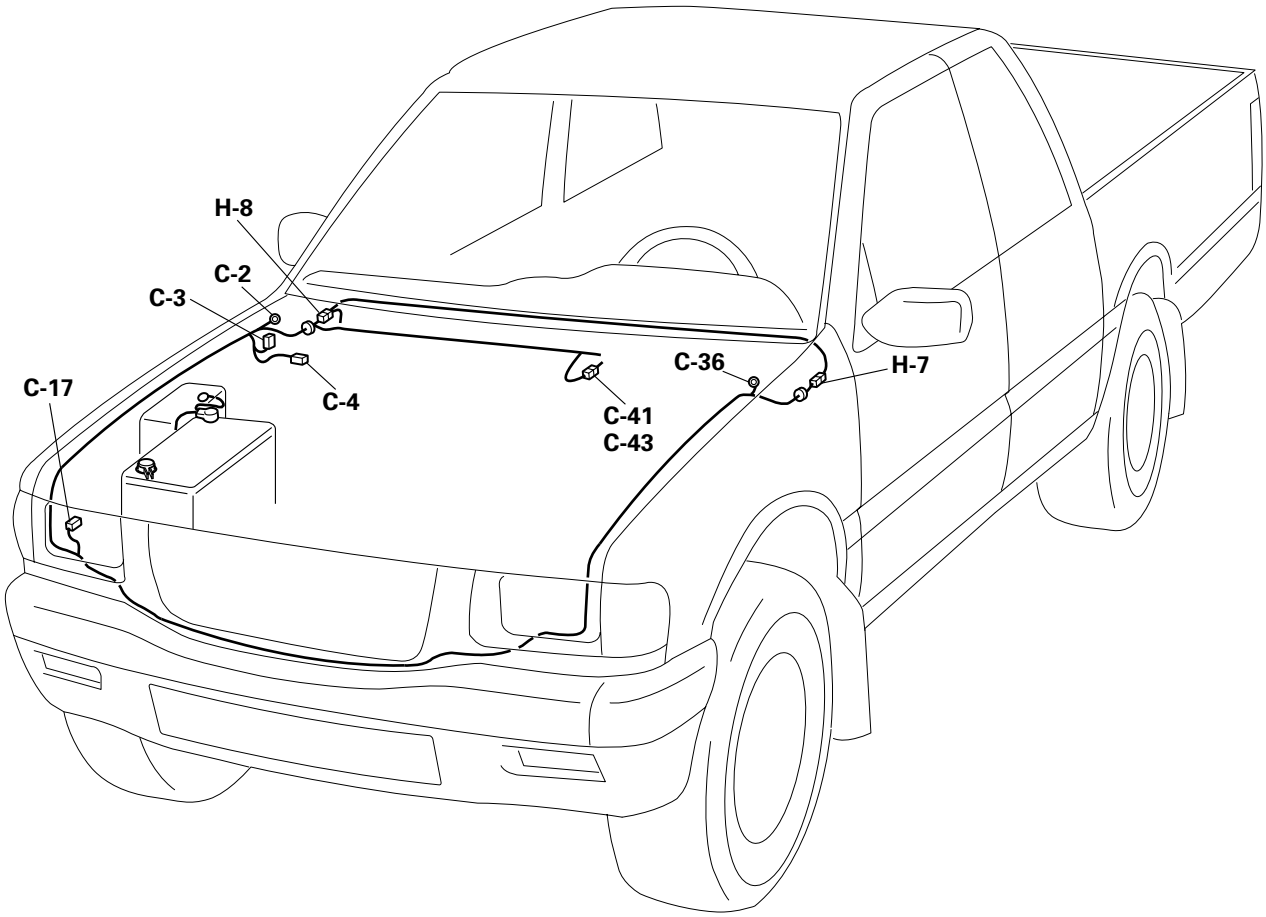

D08RVA36

PARTS LOCATION (RHD)

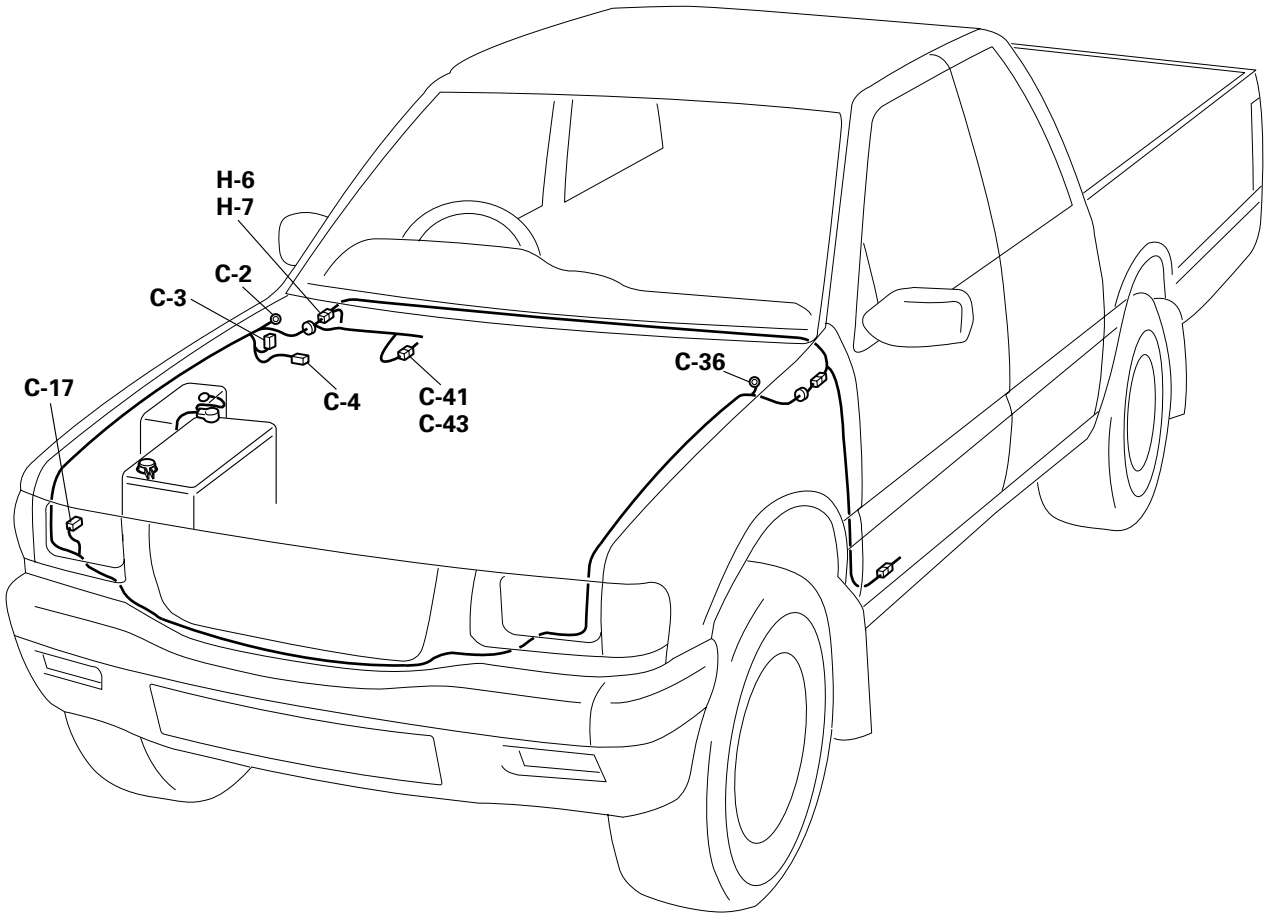

D08RVA35

CIRCUIT DIAGRAM (LHD)

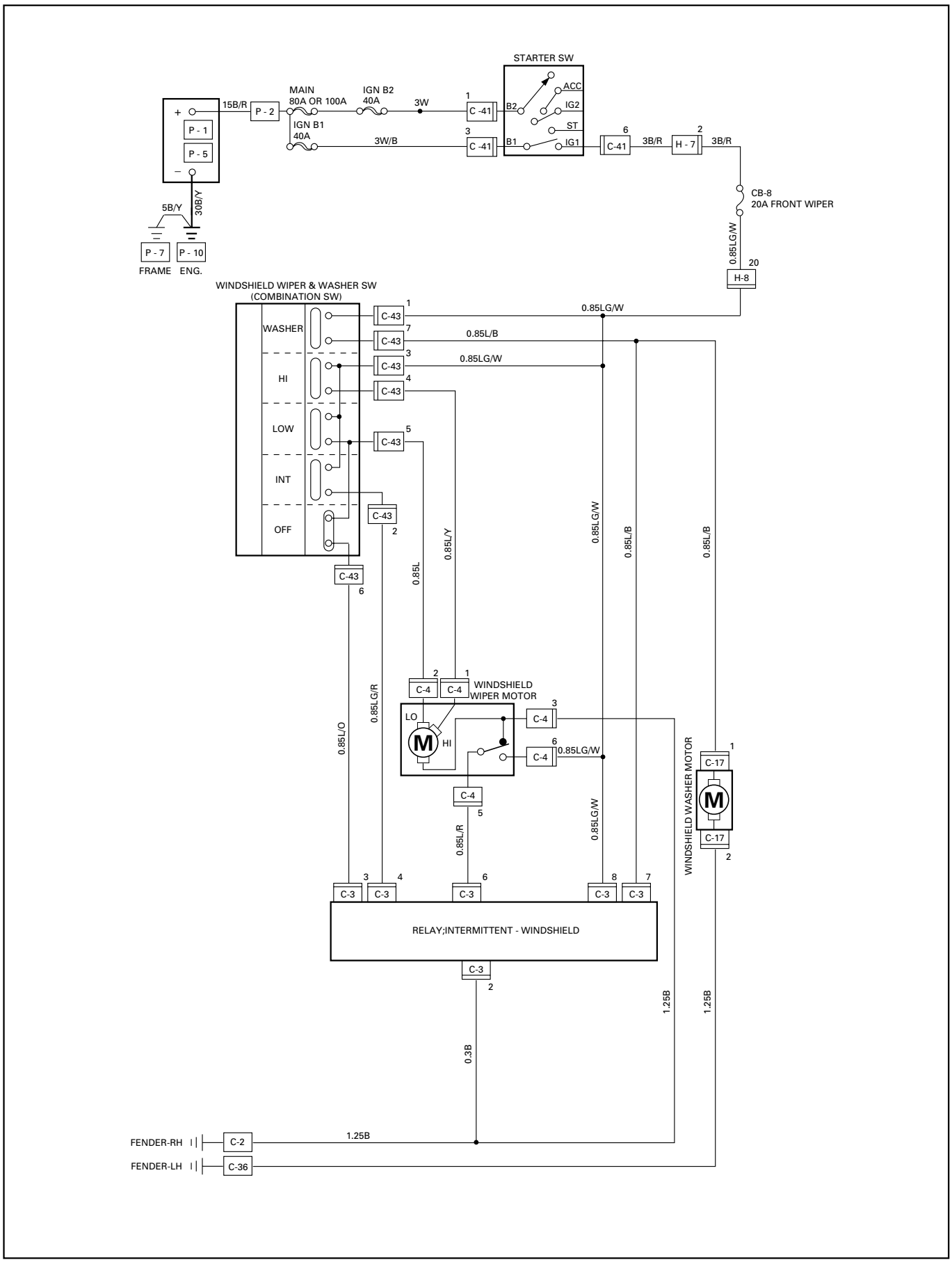

D08RW576

CIRCUIT DIAGRAM (RHD)

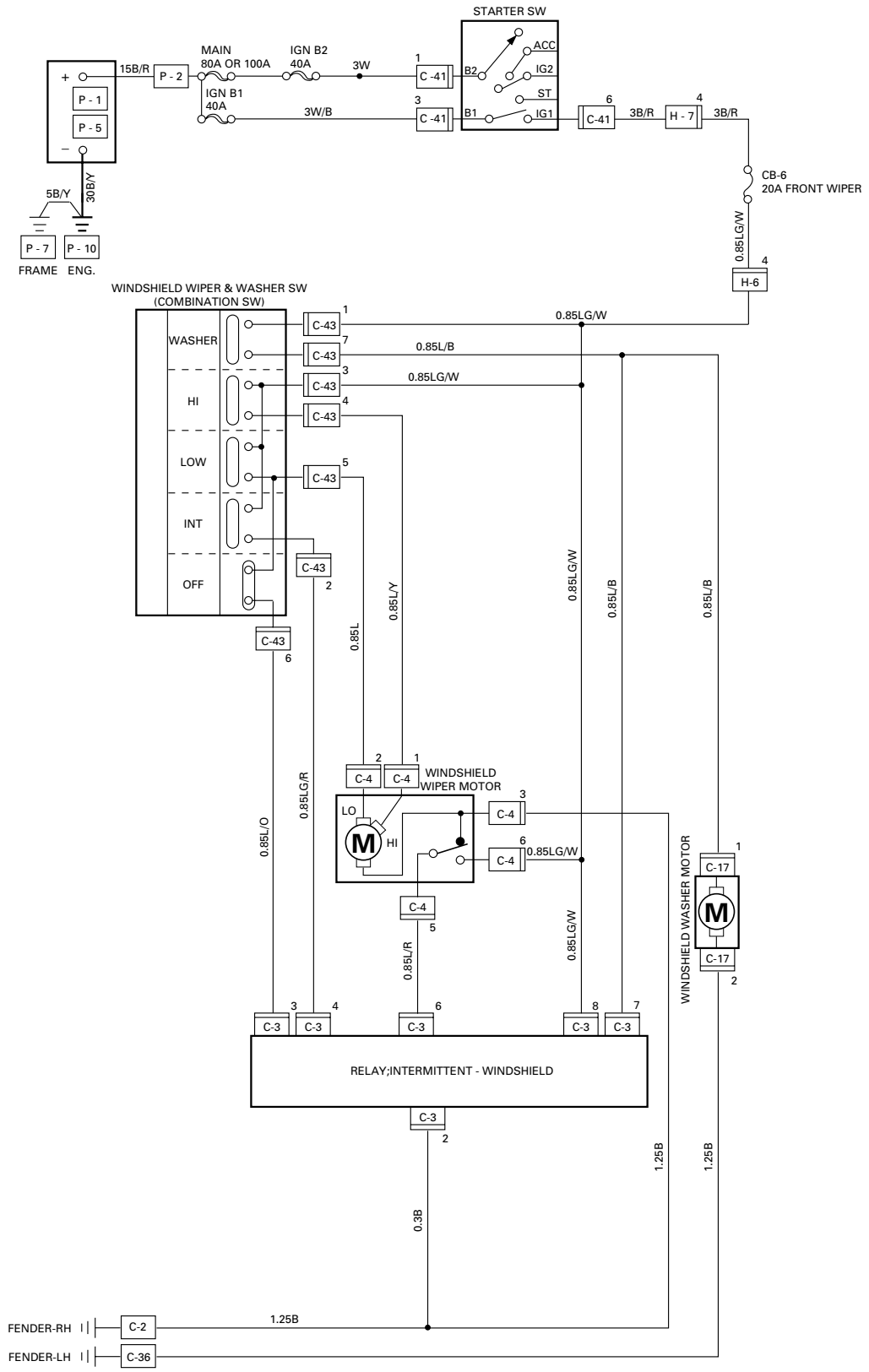

D08RV976

TROUBLE SHOOTING

WINDSHIELD WIPER

1. Wiper does not operate at any switch position

Checkpoint		Trouble Cause		Countermeasure
LHD: Fuse No. CB-8 (20A) RHD: Fuse No. CB-6 (20A)	NG	Poor fuse contact or blown		Reinstall or replace the fuse No. CB-8 (20A) (RHD: CB-6 (20A))
OK				
Voltage between 3 C-43 and the ground (Should be battery voltage present)	NG	Open circuit or poor connector contact		Repair open circuit or connector contact
OK				
Continuity in the wiper & washer SW.	NG	SW. malfunction		Replace the wiper & washer SW.
OK				
Grounding point (C-2)	NG	Poor grounding point contact		Repair grounding point (C-2) contact
OK				
1. Wiper motor function when connecting the motor connector 2 C-4 to the battery (+) terminal, and 3 C-4 to the (–) terminal (Should the wiper motor rotate at a low speed) 2. Wiper motor function when connecting the motor connector 1 C-4 to the battery (+) terminal, and 3 C-4 to the (–) terminal (Should the wiper motor rotate at a high speed)	NG	Wiper motor malfunction		Replace the wiper motor
OK				
Continuity between 3 C-4 and C-2	NG	Open circuit or poor connector contact		Repair open circuit or connector contact

2. Wiper does not operate at "INT" position

Checkpoint		Trouble Cause		Countermeasure
Continuity between the wiper & washer SW. connector terminals 3 C-43 and 2 C-43 at the "INT" position	NG	SW. malfunction	—	Replace the wiper & washer SW.
OK				
Grounding point C-2	NG	Poor grounding point contact	—	Repair grounding point contact
OK				
Voltage between the intermittent relay harness side connector terminal 4 C-3 and the ground at the "INT" position (Should be battery voltage present)	NG	Open circuit or poor connector contact	—	Repair open circuit or connector contact
OK				
Intermittent relay function	NG	Relay malfunction	—	Replace the intermittent relay

3. Wiper does not operate at "LO" position

Wiper motor function 1.Disconnect the wiper & washer SW. connector 2.Turn the starter SW. on 3.Short-circuit between the wiper & washer SW. harness side connector terminals 3 C-43 and 5 C-43 4.Check to see if the wiper motor rotates at a low speed	NG	Wiper motor malfunction	—	Replace the wiper motor
OK				
Wiper & washer SW. function	NG	SW. malfunction	—	Replace the wiper & washer SW.

4. Wiper does not operate at "HI" position

Checkpoint		Trouble Cause	Countermeasure
Continuity between the wiper & washer SW. connector terminals 3 C-43 and 4 C-43 at the "HI" position	NG	Open circuit or poor connector contact	Repair open circuit or connector contact
OK			
Wiper motor function when connecting the motor connector 1 C-4 to the battery (+) terminal, and 3 C-4 to the (–) terminal (Should the wiper motor rotate at a high speed)	NG	Wiper motor malfunction	Replace the wiper motor
OK			
Continuity between 4 C-43 and 1 C-4	NG	Open circuit or poor connector contact	Repair open circuit or connector contact

5. Rotation of the wiper motor does not stop

Continuity in the wiper & washer SW.	NG	SW. malfunction	Replace the wiper & washer SW.
OK			
Wiper motor function	NG	Wiper motor malfunction	Replace the wiper motor

6. Auto-stop function of the wiper motor does not operate

Checkpoint		Trouble Cause	Countermeasure
Continuity between the wiper & washer SW. connector terminals 5 C-43 and 6 C-43 at the "OFF" position	NG	Open circuit or poor connector contact	Repair open circuit or connector contact
OK			
Wiper motor function 1. Disconnect the wiper motor connector 2. Connect the motor connector 2 C-4 to the battery (+) terminal and 3 C-4 to the (–) terminal, and then change the connection of the battery (+) terminal to the connector 6 C-4 while the motor rotating at a low speed 3. Check to see if the wiper motor stops at the auto stop position when connecting the connector terminals 2 C-4 and 5 C-4 in this condition	NG	Wiper motor malfunction	Replace the wiper motor
OK			
Voltage between the wiper motor harness side connector terminal 6 C-4 and the ground (Should be battery voltage present)	NG	Open circuit or poor connector contact	Repair an open circuit or a poor connection of the connectors between the fuse No. CB-8 (20A) (RHD: CB-6 (20A)) and 6 C-4
OK			
Continuity between the intermittent relay harness side connector 6 C-3 and the wiper motor harness side connector 5 C-4	NG	Open circuit or poor connector contact	Repair open circuit or connector contact
OK			
Intermittent relay function	NG	Relay malfunction	Replace the intermittent relay

WASHER

1. Washer motor does not operate

Checkpoint		Trouble Cause		Countermeasure
LHD: Fuse No. CB-8 (20A) RHD: Fuse No. CB-6 (20A)	NG	Poor fuse contact or blown		Reinstall or replace the fuse No. CB-8 (20A) (RHD: CB-6 (20A))
OK				
Continuity between the wiper & washer SW. side connector terminals 1 C-43 and 7 C-43 when the washer button is depressed	NG	SW. malfunction		Replace the wiper & washer SW.
OK				
Voltage between the wiper & washer SW. harness side connector terminal 1 C-43 and the ground (Should be battery voltage present)	NG	Open circuit or poor connector contact		Repair or an open circuit or a poor connection of the connectors between the fuse No. CB-8 (20A) (RHD: CB-6 (20A)) and 1 C-43
OK				
Voltage between the washer motor harness side connector terminal 1 C-17 and the ground when the washer button is depressed (Should be battery voltage present)	NG	Open circuit or poor connector contact		Repair or an open circuit or a poor connection of the connectors between 1 C-17 and 7 C-43
OK				
Grounding point (C-36)	NG	Poor grounding point contact		Repair grounding point (C-36) contact
OK				
Washer motor function when connecting the motor side connector 1 C-17 to the battery (+) terminal, and the connector 2 C-17 to the (–) terminal (Should the washer motor rotate)	NG	Motor malfunction		Replace the washer motor
OK				
Continuity between 2 C-17 and C-36	NG	Open circuit or poor connector contact		Repair open circuit or connector contact

REMOVAL AND INSTALLATION

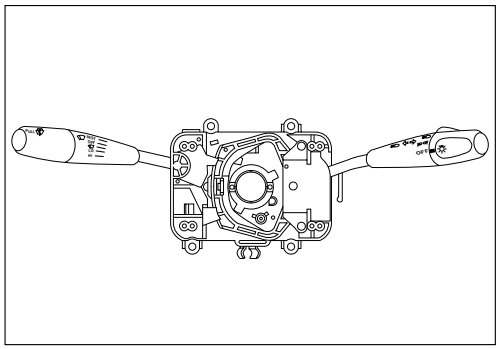

WIPER AND WASHER SWITCH

Removal

Refer to the removal steps of the LIGHTING SWITCH (COMBINATION SWITCH) in “LIGHTING” of this section.

Installation

Follow the removal procedure in the reverse order to install the wiper and washer switch.

Pay close attention to the important points mentioned in the following paragraphs.

Connector

Be absolutely sure that the wiper and washer switch connector is securely connected.

This will prevent a poor contact and an open circuit.

INSPECTION AND REPAIR

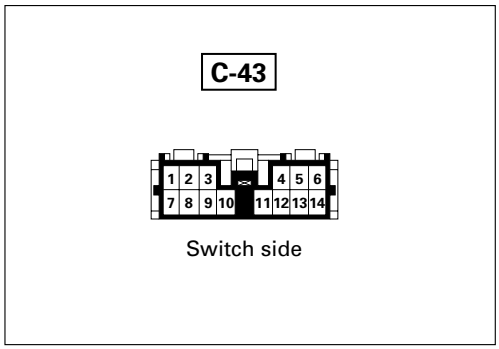

Control Switch Connections

SW position \ Terminal No.	6	3	5	4	2	1	7
Mist		○	○				
Off	○		○				
INT	○	○	○		○		
Lo		○	○				
Hi		○		○			
Wash						○	○

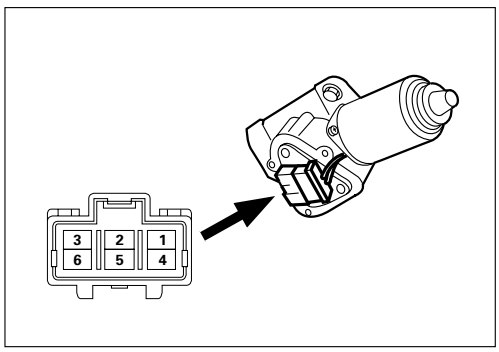

825RV084

Wiper Motor Inspection

Connector

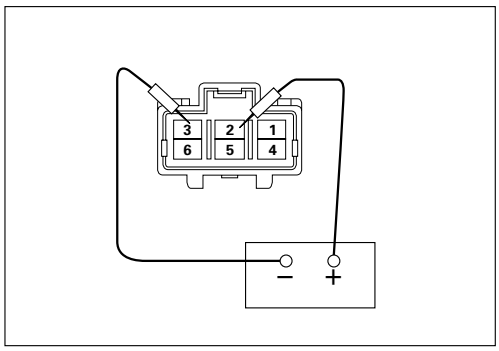

825RV081

Low Speed Inspection

1. Clamp the wiper motor in a vise.
   The moving parts must be clear of the vise.
2. Connect the connector terminals to the battery.
   Refer to the illustration.
3. Check the wiper motor low speed operation.

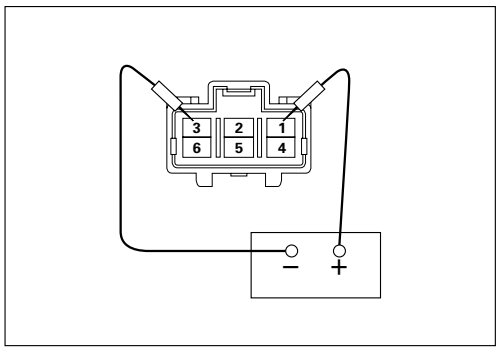

825RV082

High Speed Inspection

1. Clamp the wiper motor in a vise.
   The moving parts must be clear of the vise.
2. Connect the connector terminals to the battery.
   Refer to the illustration.
3. Check the wiper motor high speed operation.

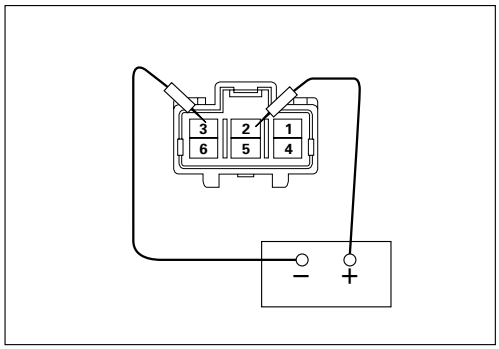

825RV081

Auto-Stop Inspection

1. Clamp the wiper motor in a vise.
   The moving parts must be clear of the vise.
2. Connect the connector terminals to the battery.
   Refer to the illustration.
3. Check the wiper motor low speed operation.
4. Disconnect the positive battery terminal.
   This will stop the motor.

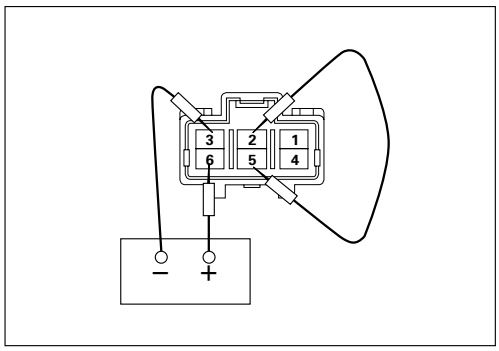

825RV080

5. Connect the connector terminals No. 2 and No. 5 with a lead wire.
   Refer to the illustration.
6. Reconnect the positive battery terminal to connector terminal No. 6.
   This will restart the motor.
   Refer to the illustration.
7. Check the auto-stop operation.

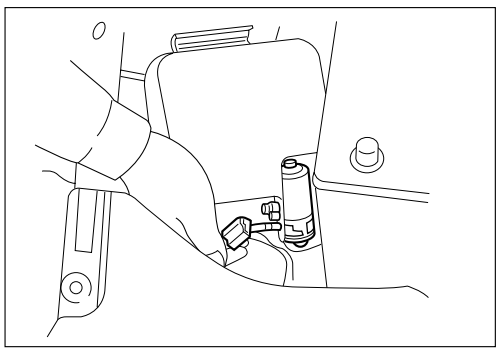

825RV079

Washer Motor Inspection

1. Fill the washer tank with washing solution.
2. Disconnect the motor connector.
3. Apply battery voltage to the washer motor connector.
4. Check the washer motor operation.

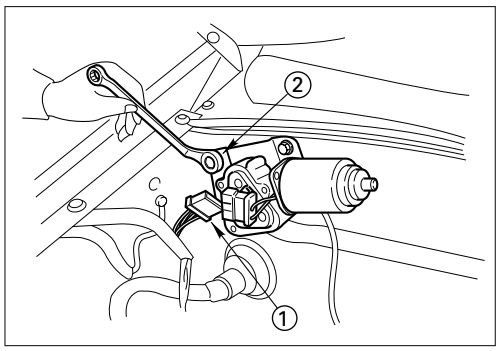

825RV069

WIPER MOTOR AND LINKAGE

Removal

1. Disconnect the wiper motor connector ①.
2. Remove the wiper motor bracket screws ②.

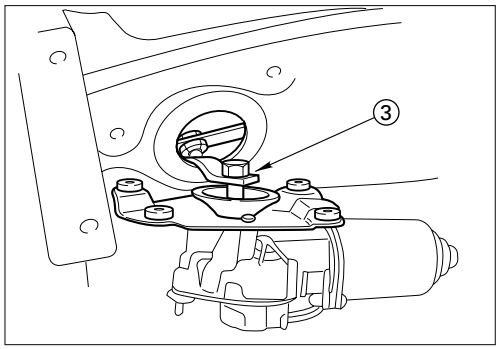

825RV070

3. Disconnect the wiper motor from the wiper linkage at the crank arm ③.

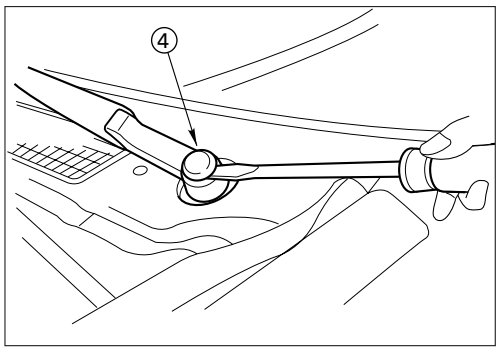

825RV071

4. Disconnect the wiper arm nut cap ④.

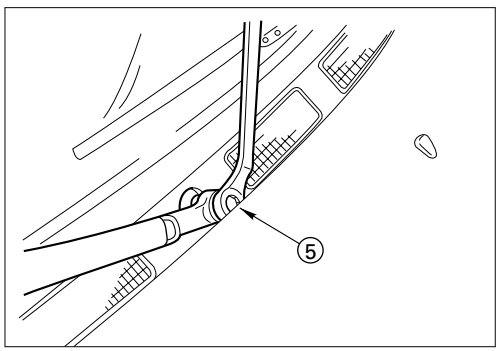

825RV072

5. Remove the wiper arm nut ⑤.
6. Remove the wiper arm with blade.

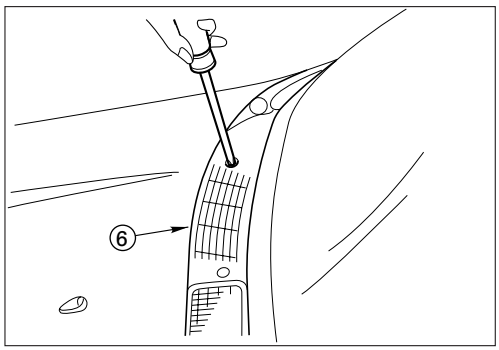

825RV073

7. Remove the vent cowl cover ⑥.

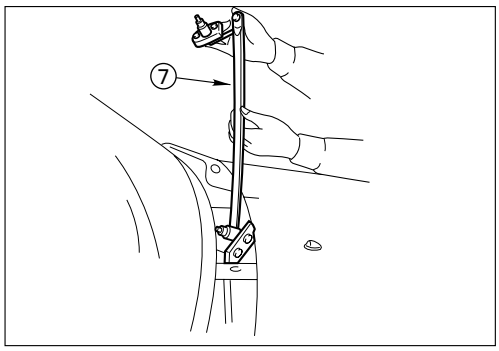

825RV074

8. Remove the wiper linkage ⑦ from the access hole.

Installation

Follow the removal procedure in the reverse order to install the wiper motor and linkage.

Pay close attention to the important points mentioned in the following paragraphs.

Wiper Linkage

Take care not to scratch the painted surfaces of the body when installing the wiper linkage to the body.
In case crank arm of wiper motor is removed, confirm the position of auto stop prior to reinstall the crank arm to the wiper motor.

Crank Arm Nut Torque	kg·m (lb·ft/N·m)
1.4 ±0.2 (10 ± 1.4/13.7 ± 2.0)	

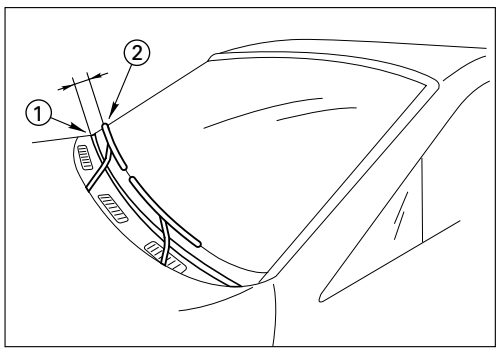

825RV075

Wiper Blade Position

Confirm the auto stop position of wiper motor prior to the installation of the wiper blade and arm.

The distance between the vent cowl cover rubber seal ① and the wiper blade edge ② is about 45 mm (1.8 in).

Wiper Arm Nut

Tighten the wiper arm nut to the specified torque.

Wiper Arm Nut Torque	kg·m (lb·ft/N·m)
1.4 ± 0.2 (10 ± 1.4/13.7 ± 2.0)	

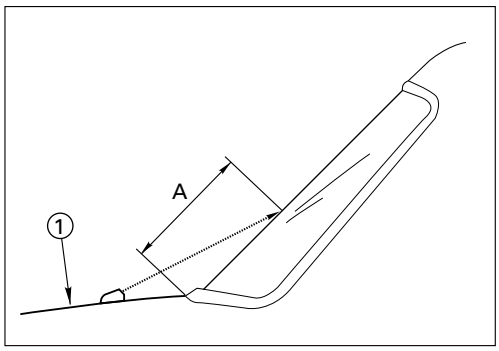

825RV076

Windshield Washer Spray

Be sure that the engine hood ① is completely closed before checking the windshield washer spray adjustment.

Windshield Washer Spray Position	mm (in)
A	Approximately 300 (11.8)

Connector

Be absolutely sure that the wiper motor connector is securely connected.

This will prevent a poor contact and an open circuit.

Note:

Windshield wiper arm and blade assembly configurations are different for the right-hand and left-hand side of the vehicle.

Be careful not to confuse the right-hand and left-hand side assemblies.

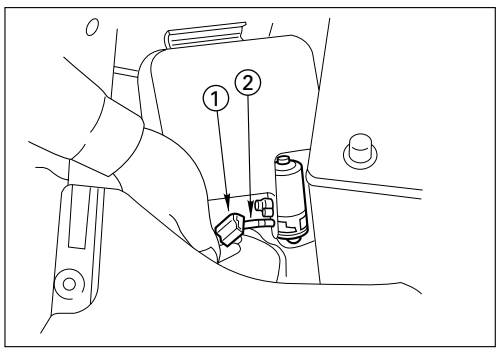

825RV077

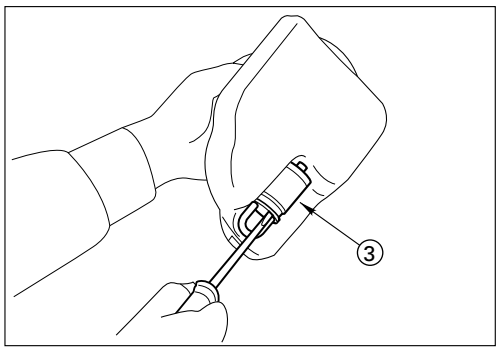

825RV078

WASHER TANK MOTOR

Removal

1. Remove the washer tank bolts.
2. Disconnect the connector ①.
3. Disconnect the water hose ②.
4. Remove the washer tank motor ③.

Installation

Follow the removal procedure in the reverse order to install the washer tank motor.

Pay close attention to the important points mentioned in the following paragraphs.

Connector

Be absolutely sure that the washer tank motor connector is securely connected.

This will prevent a poor contact and an open circuit.

OVERDRIVE OFF (A/T)

PARTS LOCATION

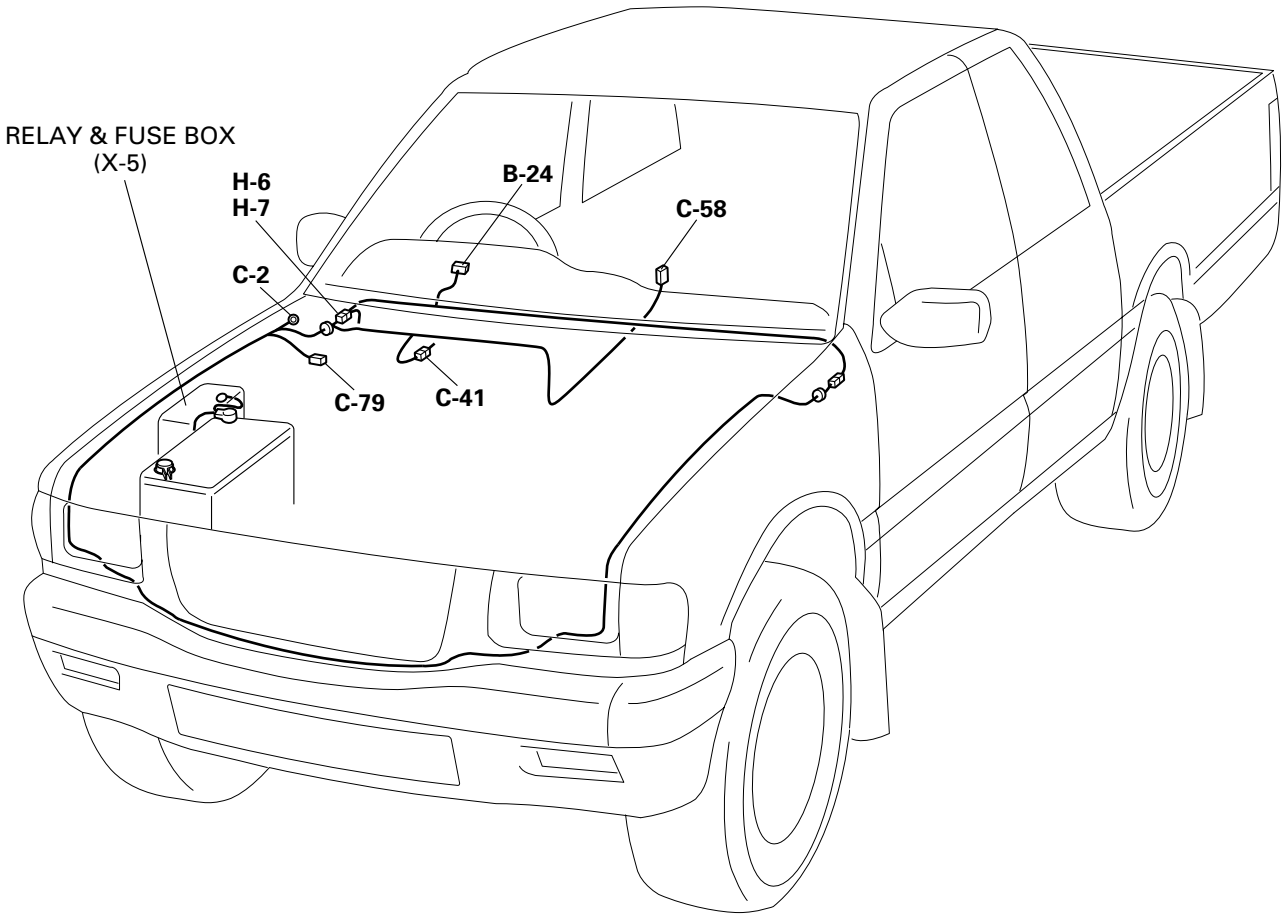

D08RVA37

CIRCUIT DIAGRAM

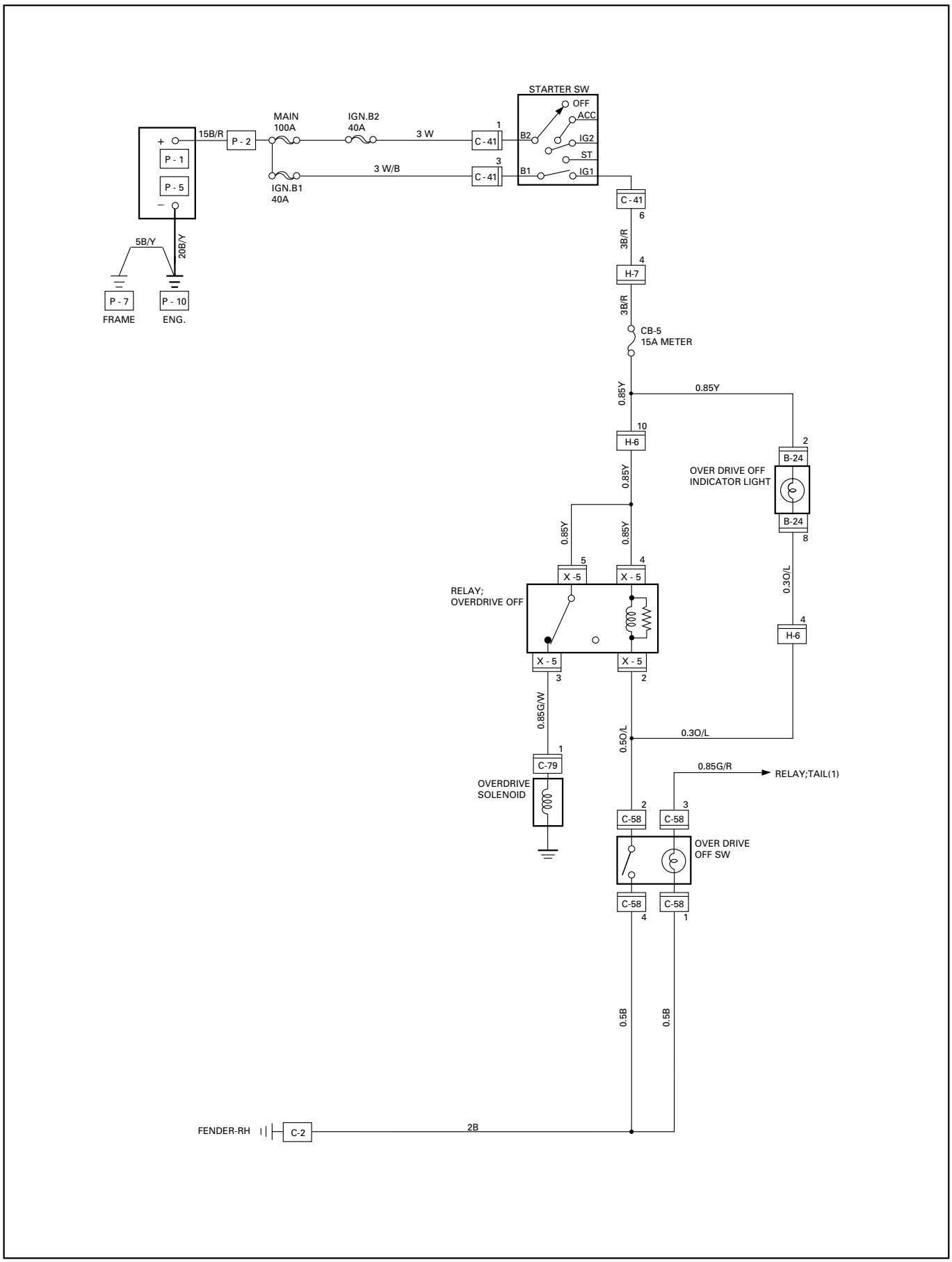

D08RV961

INSPECTION AND REPAIR

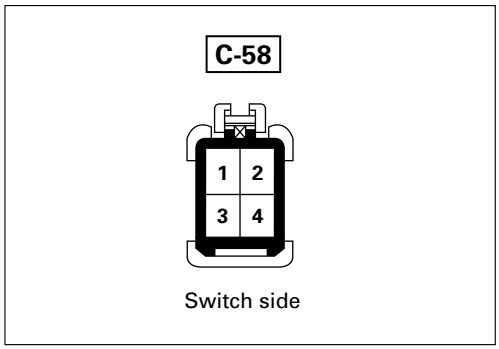

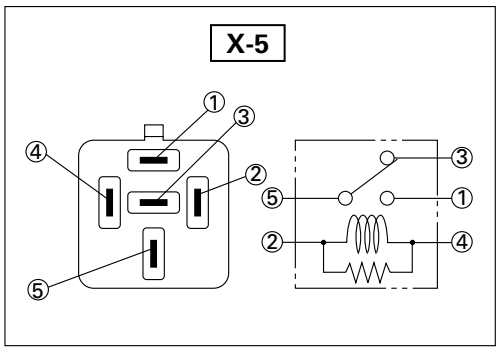

060RV005

OVERDRIVE OFF SWITCH

Overdrive Off Switch Connections

SW position \ Terminal No.	2	4	1	3
ON	○	○		
OFF				

OVERDRIVE OFF RELAY

Check continuity between the relay terminals.

③ – ⑤ . . . . . Continuity

(When battery voltage is applied between ② and ④)

③ – ⑤ . . . . . No continuity

TRANSMISSION CONTROL MODULE (TCM)

PARTS LOCATION (RHD)

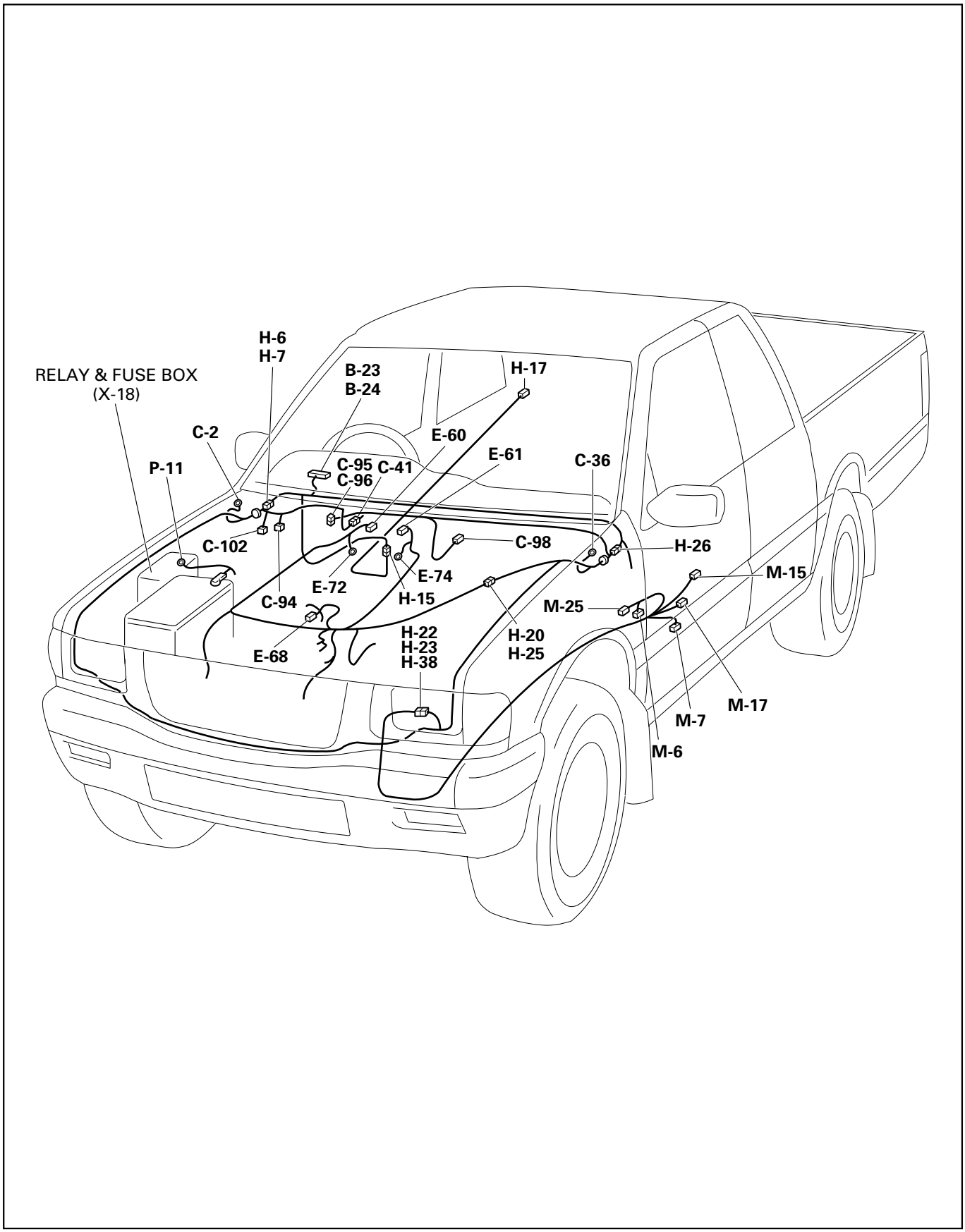

D08RW543

CIRCUIT DIAGRAM (6VD1-W/TCM)

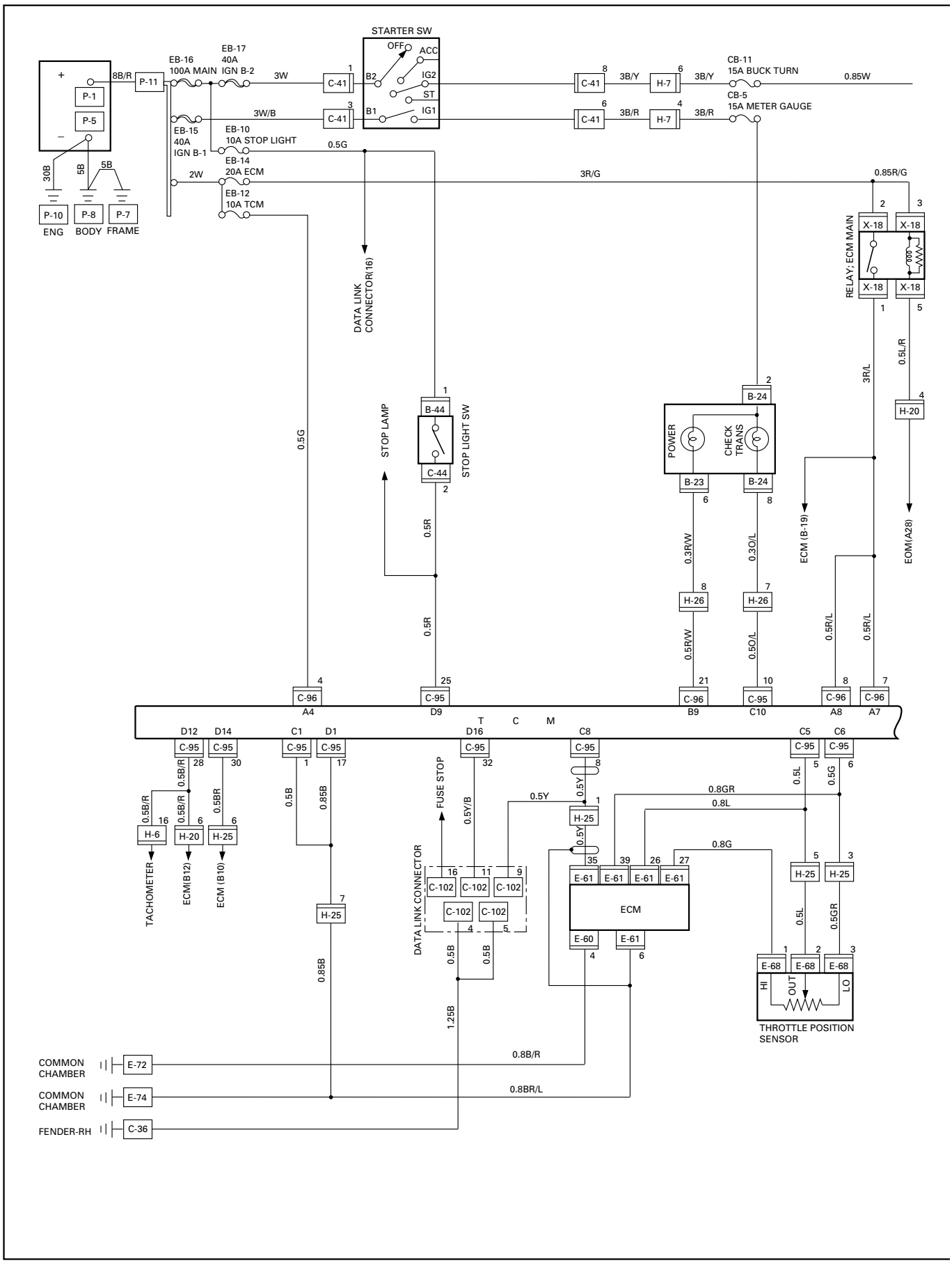

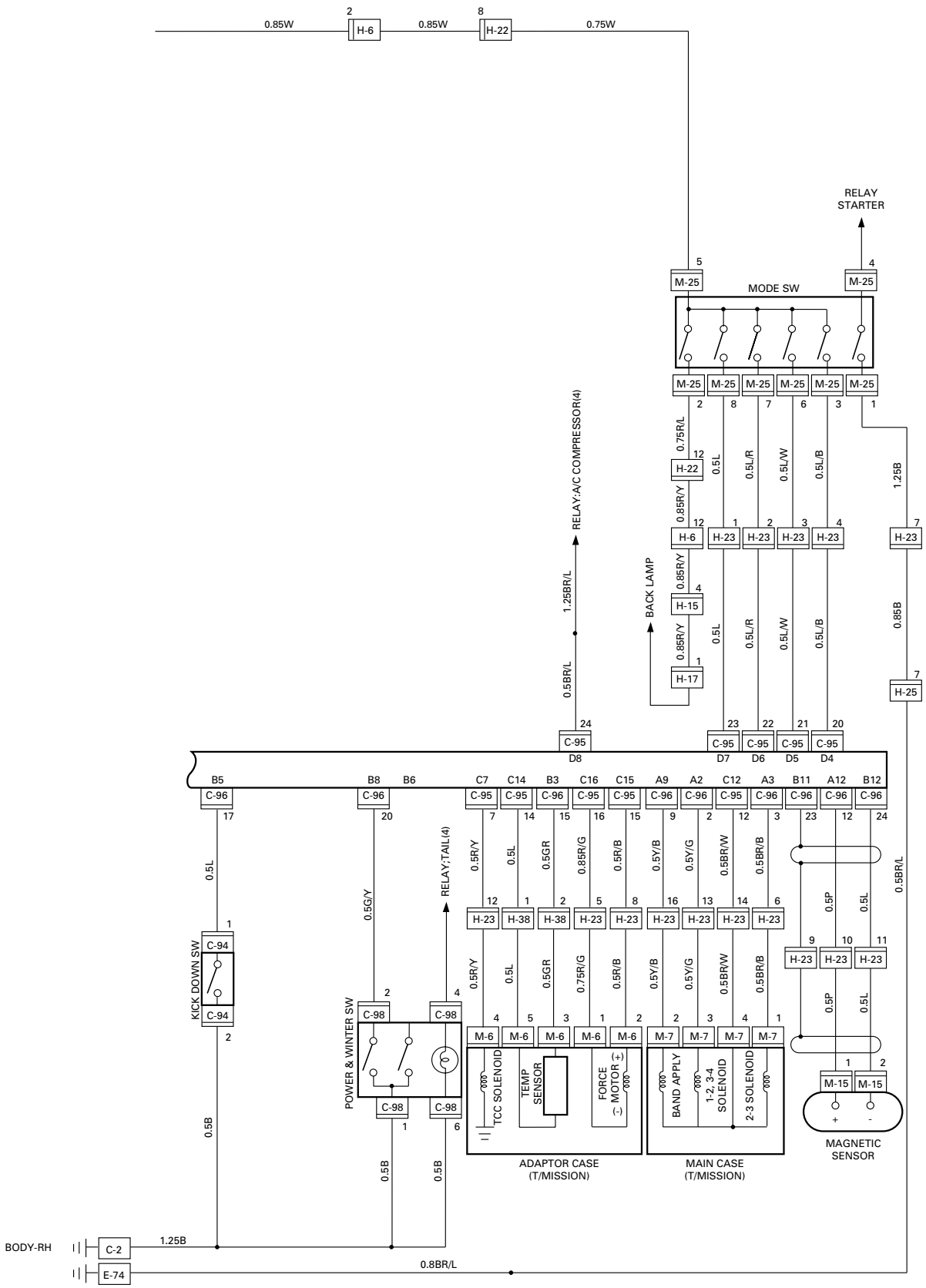
0.85W
H-6
0.85W
H-22
0.75W
RELAY STARTER
M-25
MODE SW
M-25
0.75R/L
H-22
0.5L
0.5L/R
0.5L/W
0.5L/B
1.25B
0.85R/Y
H-6
H-23
H-23
H-23
H-23
H-23
RELAY;A/C COMPRESSOR(4)
1.25BR/L
BACK LAMP
0.85R/Y
H-15
0.85R/Y
H-17
0.5L
0.5L/R
0.5L/W
0.5L/B
0.85B
H-25
0.5BR/L
C-95
C-95
C-95
C-95
C-95
D8
D7
D6
D5
D4
B5
B8
B6
C7
C14
B3
C16
C15
A9
A2
C12
A3
B11
A12
B12
C-96
C-96
C-95
C-95
C-96
C-95
C-95
C-96
C-96
C-95
C-96
C-96
C-96
0.5L
0.5G/Y
RELAY;TAIL(4)
0.5R/Y
0.5L
0.5GR
0.85R/G
0.5R/B
0.5Y/B
0.5Y/G
0.5BR/W
0.5BR/B
0.5P
0.5L
0.5BR/L
H-23
H-38
H-38
H-23
H-23
H-23
H-23
H-23
H-23
H-23
H-23
KICK DOWN SW
C-94
C-94
0.5R/Y
0.5L
0.5GR
0.75R/G
0.5R/B
0.5Y/B
0.5Y/G
0.5BR/W
0.5BR/B
0.5P
0.5L
POWER & WINTER SW
C-98
C-98
C-98
C-98
M-6
M-6
M-6
M-6
M-6
M-7
M-7
M-7
M-7
TCC SOLENOID
TEMP SENSOR
FORCE MOTOR
BAND APPLY
1-2, 3-4 SOLENOID
2-3 SOLENOID
M-15
M-15
MAGNETIC SENSOR
ADAPTOR CASE (T/MISSION)
MAIN CASE (T/MISSION)
0.5B
0.5B
0.5B
BODY-RH
C-2
1.25B
E-74
0.8BR/L

D08RW542

METER, WARNING LIGHT AND INDICATOR LIGHT

PARTS LOCATION (GASOLINE ENGINE – LHD)

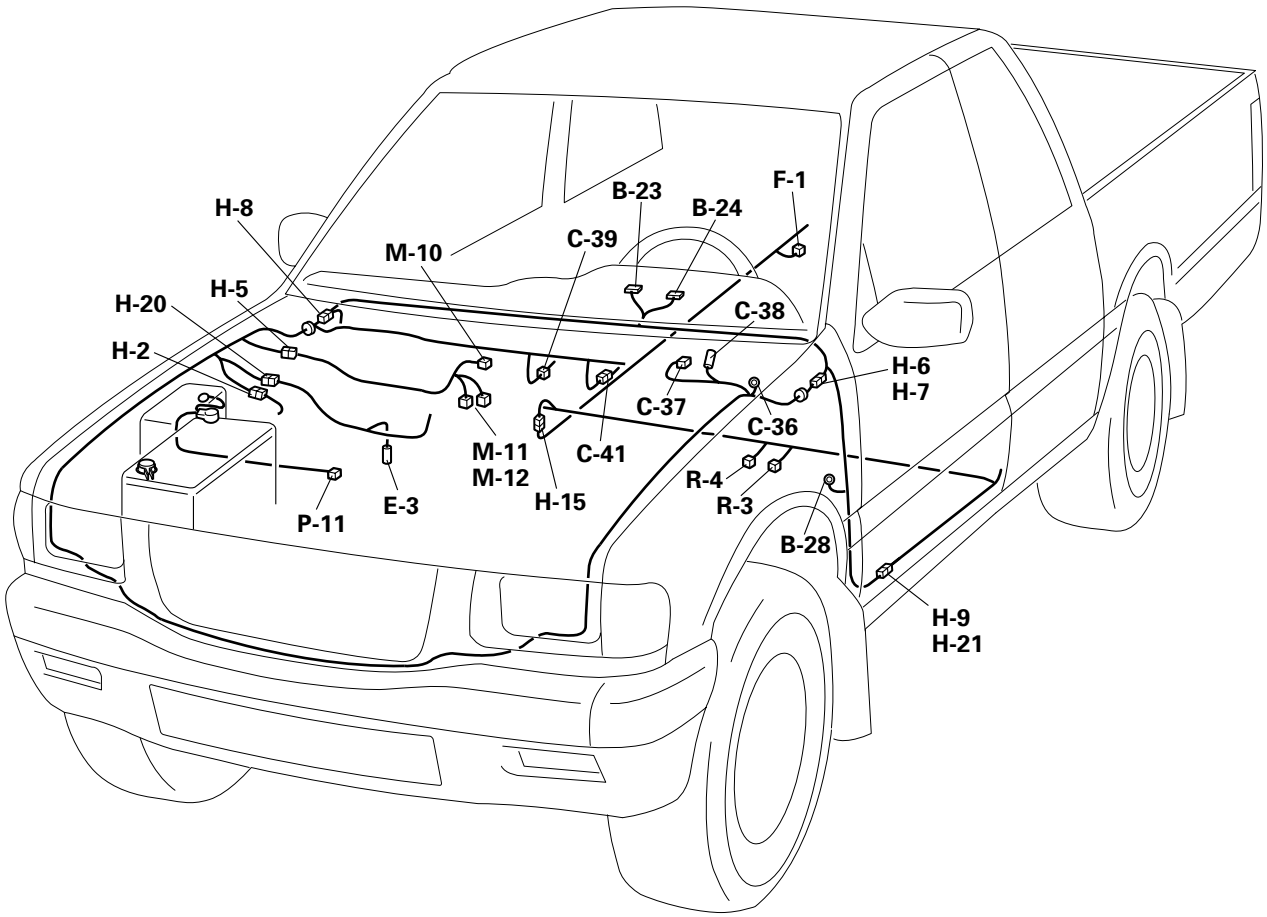

D08RVA43

PARTS LOCATION (6VD1 GASOLINE ENGINE – LHD)

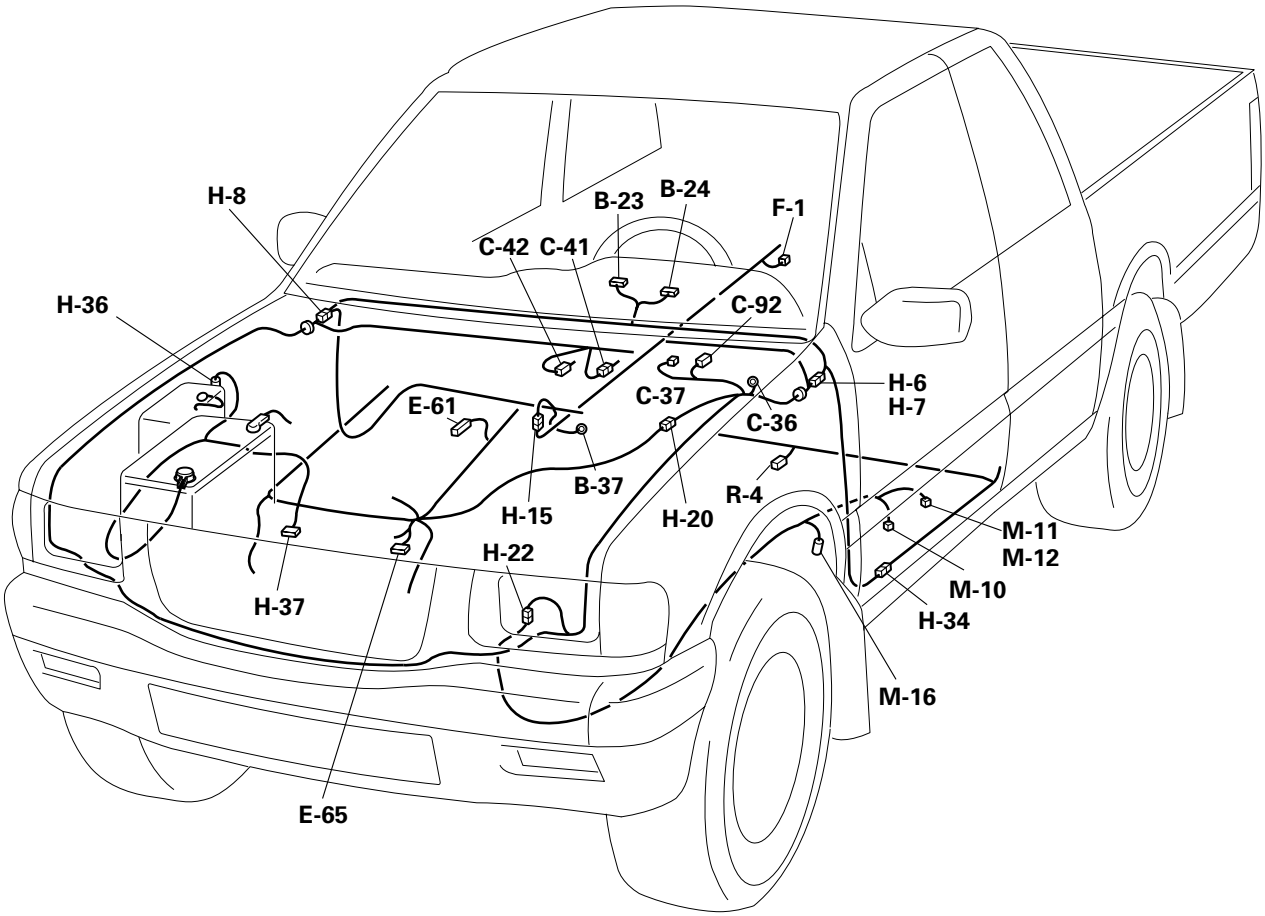

D08RW575

PARTS LOCATION (GASOLINE ENGINE – RHD)

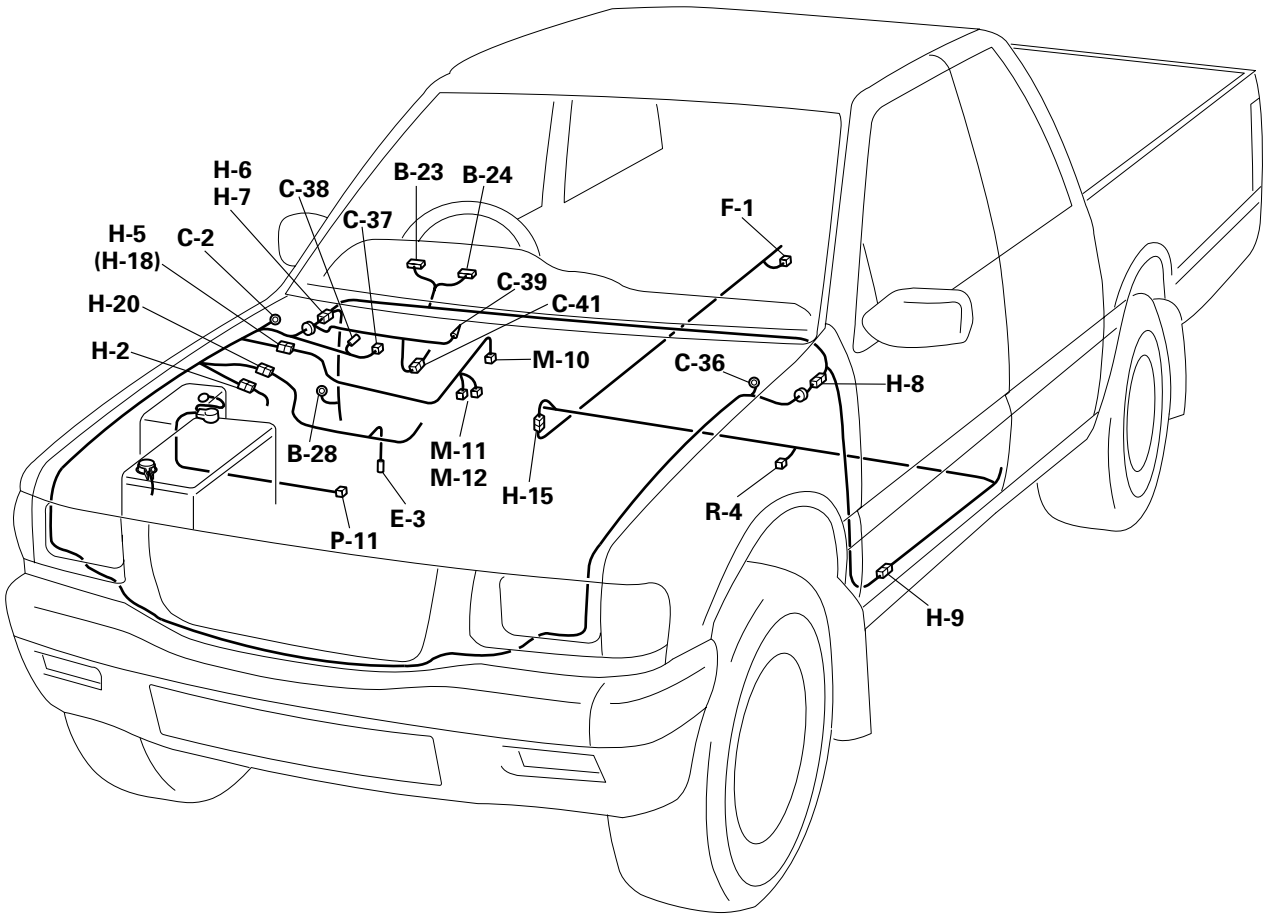

D08RVA53

PARTS LOCATION (6VD1 GASOLINE ENGINE – RHD)

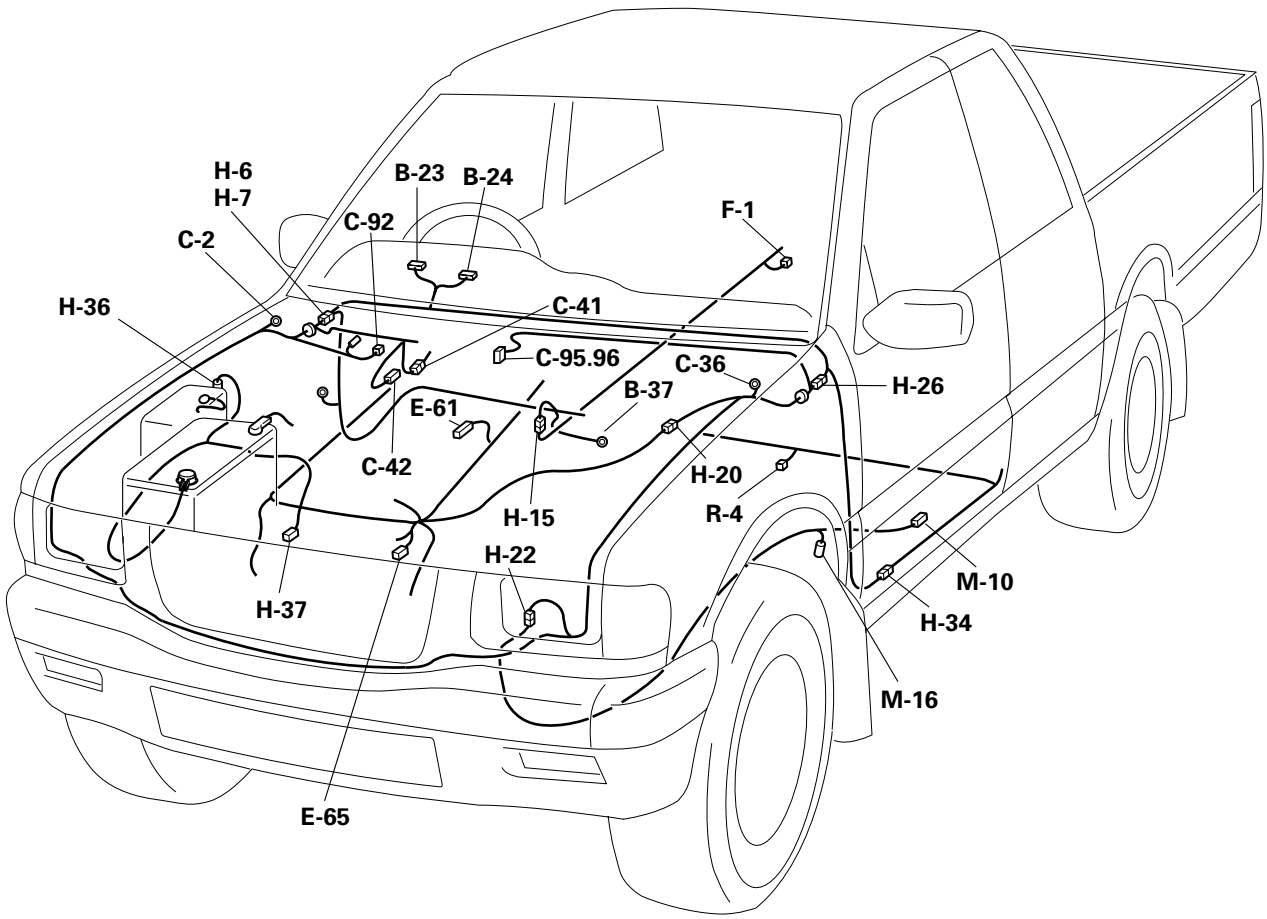

D08RW574

PARTS LOCATION (DIESEL ENGINE – LHD)

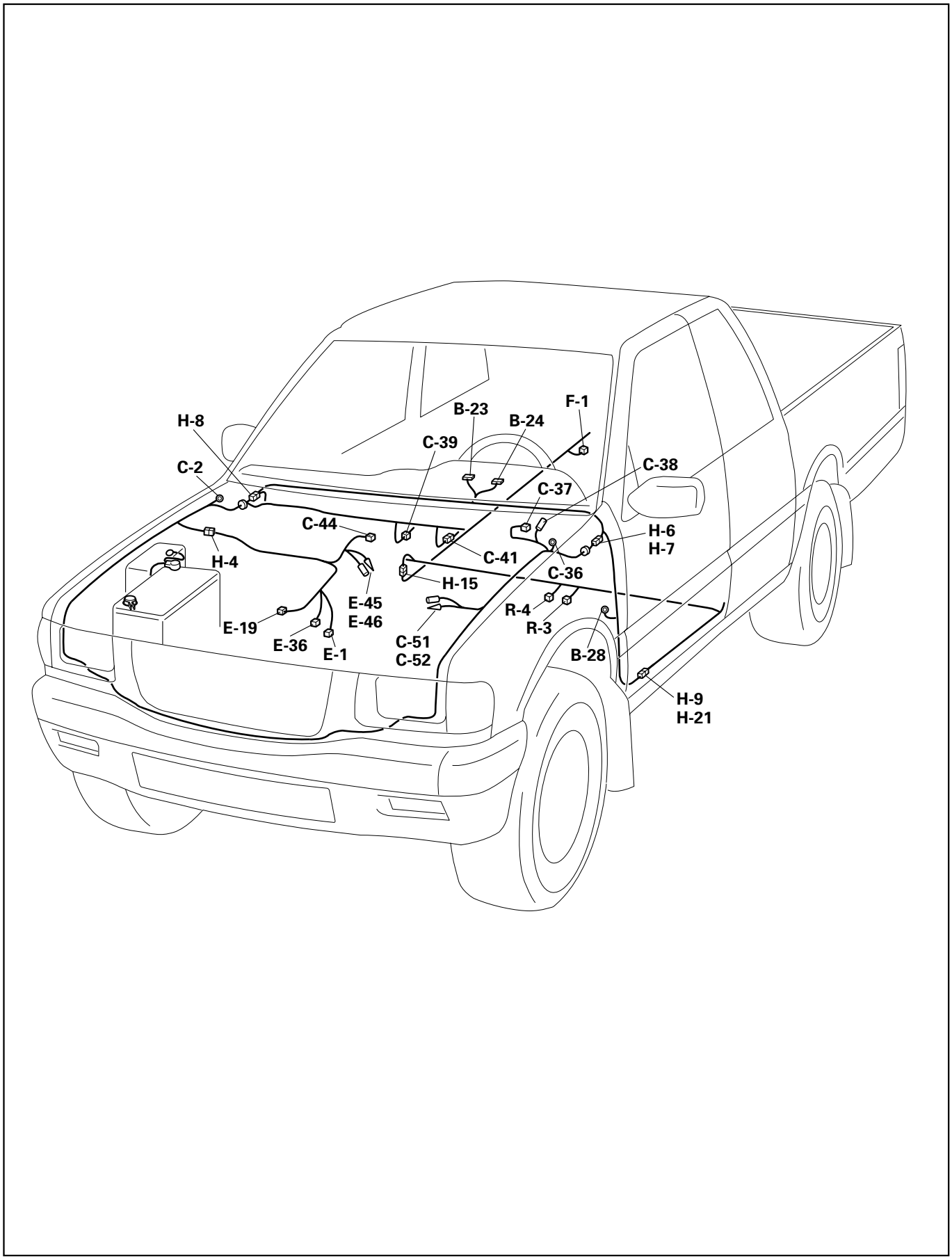

D08RVA42

PARTS LOCATION (DIESEL ENGINE – RHD)

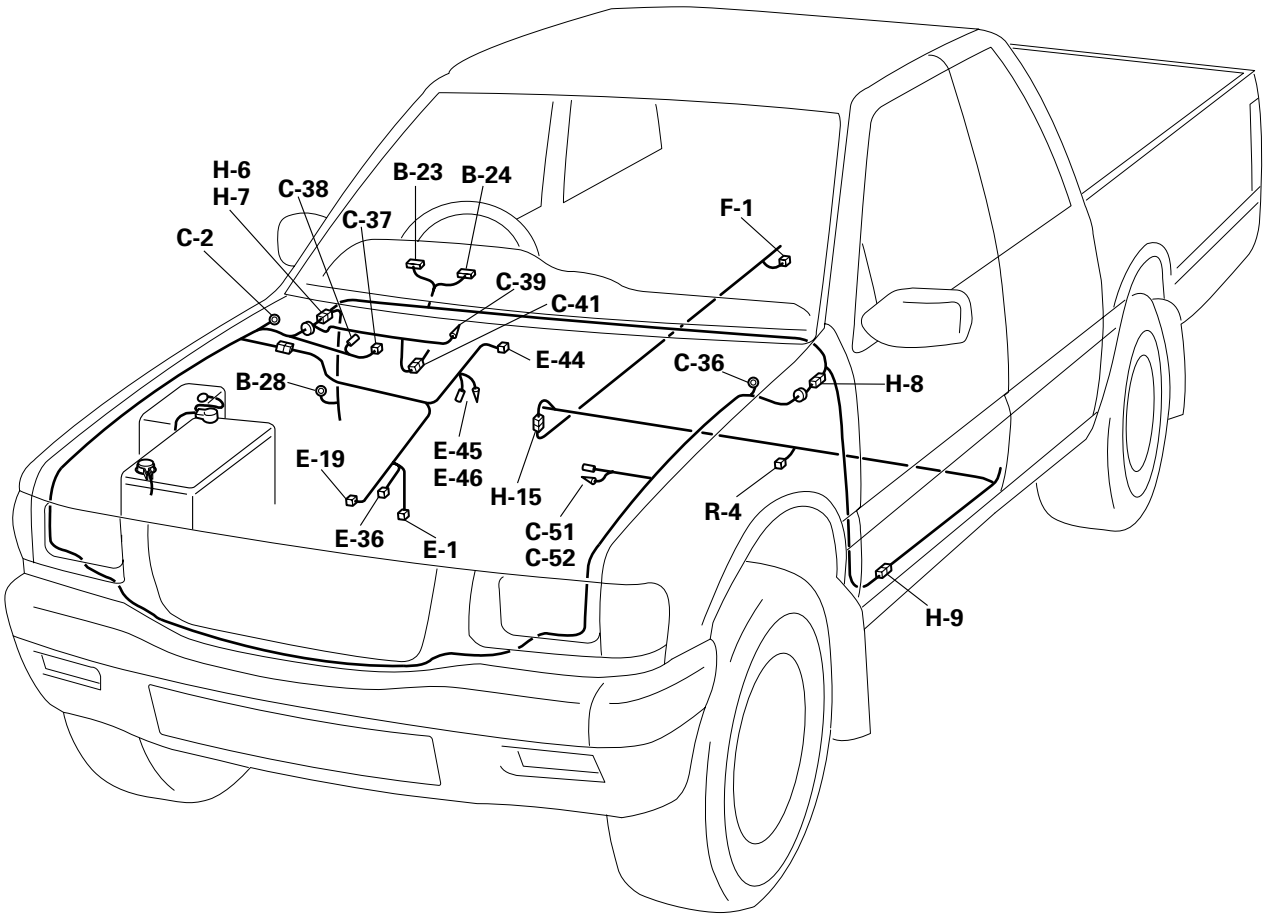

D08RVA50

CIRCUIT DIAGRAM (W/O TACHOMETER – GASOLINE ENGINE (LHD))

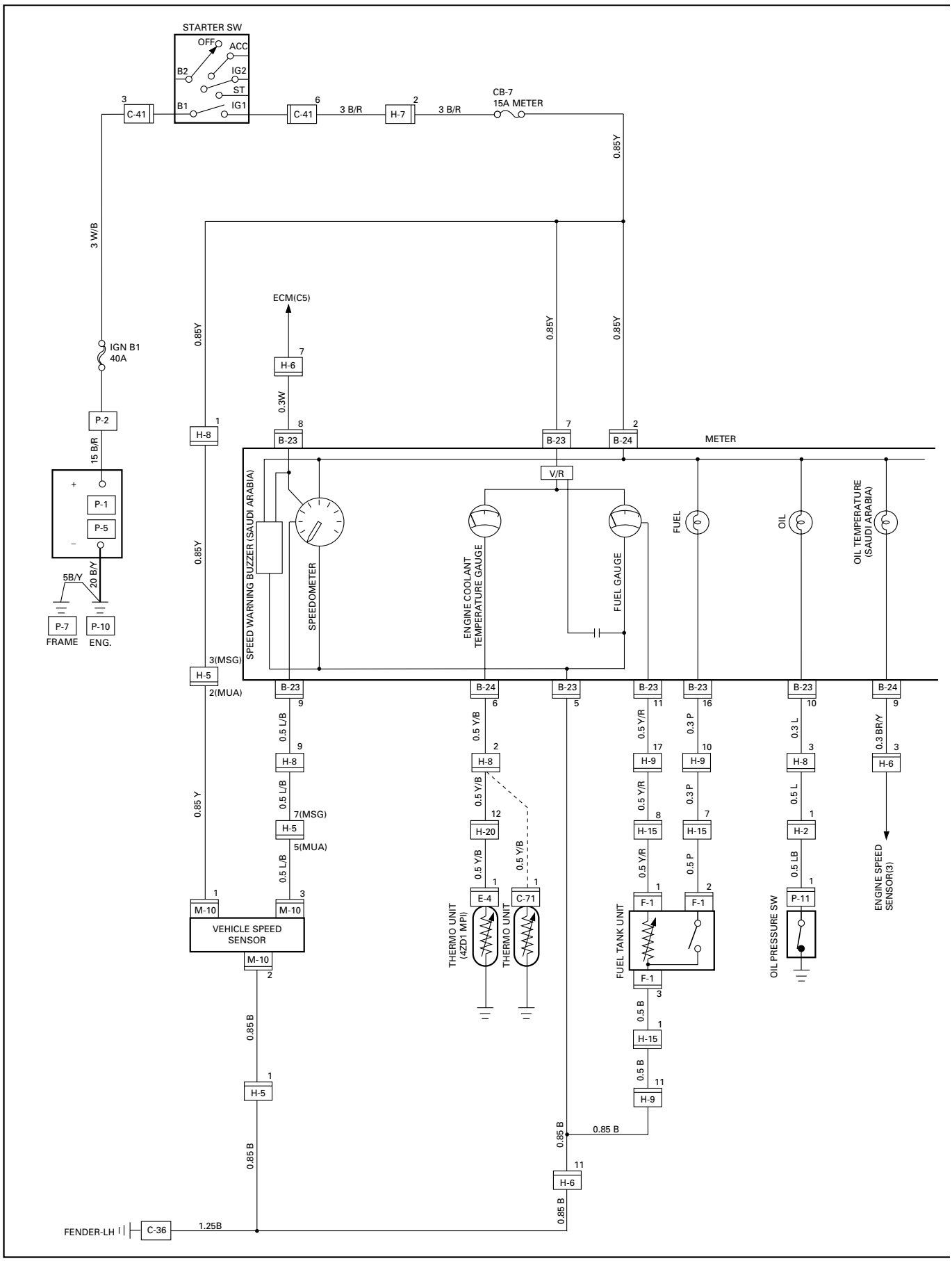

D08RV996

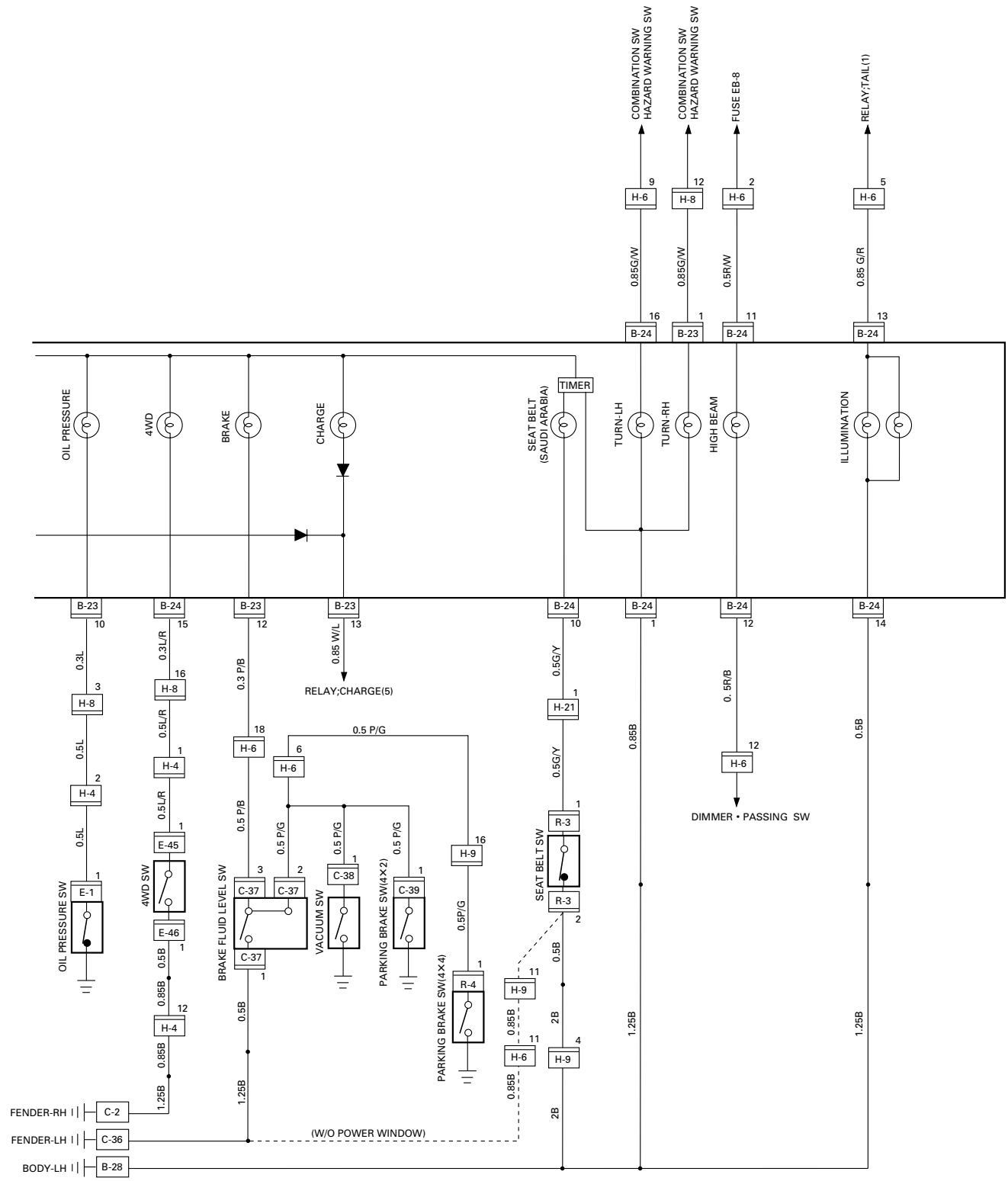
COMBINATION SW HAZARD WARNING SW
COMBINATION SW HAZARD WARNING SW
FUSE EB-8
RELAY;TAIL(1)
H-6
H-8
H-6
H-6
0.85G/W
0.85G/W
0.5R/W
0.85 G/R
B-24
B-23
B-24
B-24
OIL PRESSURE
4WD
BRAKE
CHARGE
TIMER
SEAT BELT (SAUDI ARABIA)
TURN-LH
TURN-RH
HIGH BEAM
ILLUMINATION
B-23
B-24
B-23
B-23
B-24
B-24
B-24
B-24
0.3L
0.3L/R
0.3 P/B
0.85 W/L
RELAY;CHARGE(5)
0.5G/Y
0. 5R/B
H-8
H-8
H-6
H-6
H-21
H-6
0.5 P/G
0.5L
0.5L/R
0.5L
0.5L/R
0.5 P/B
0.5 P/G
0.5 P/G
0.5 P/G
0.5G/Y
0.85B
0.5B
DIMMER • PASSING SW
H-4
H-4
E-45
E-46
H-4
H-9
R-3
R-3
E-1
C-37
C-37
C-37
C-38
C-39
H-9
R-4
H-9
H-6
H-9
OIL PRESSURE SW
4WD SW
BRAKE FLUID LEVEL SW
VACUUM SW
PARKING BRAKE SW(4×2)
PARKING BRAKE SW(4×4)
SEAT BELT SW
0.5B
0.85B
0.5B
0.85B
0.5B
0.5P/G
0.5B
2B
1.25B
1.25B
1.25B
0.85B
0.85B
2B
FENDER-RH
C-2
FENDER-LH
C-36
BODY-LH
B-28
(W/O POWER WINDOW)

D08RV998

CIRCUIT DIAGRAM (W/O TACHOMETER – GASOLINE ENGINE (RHD))

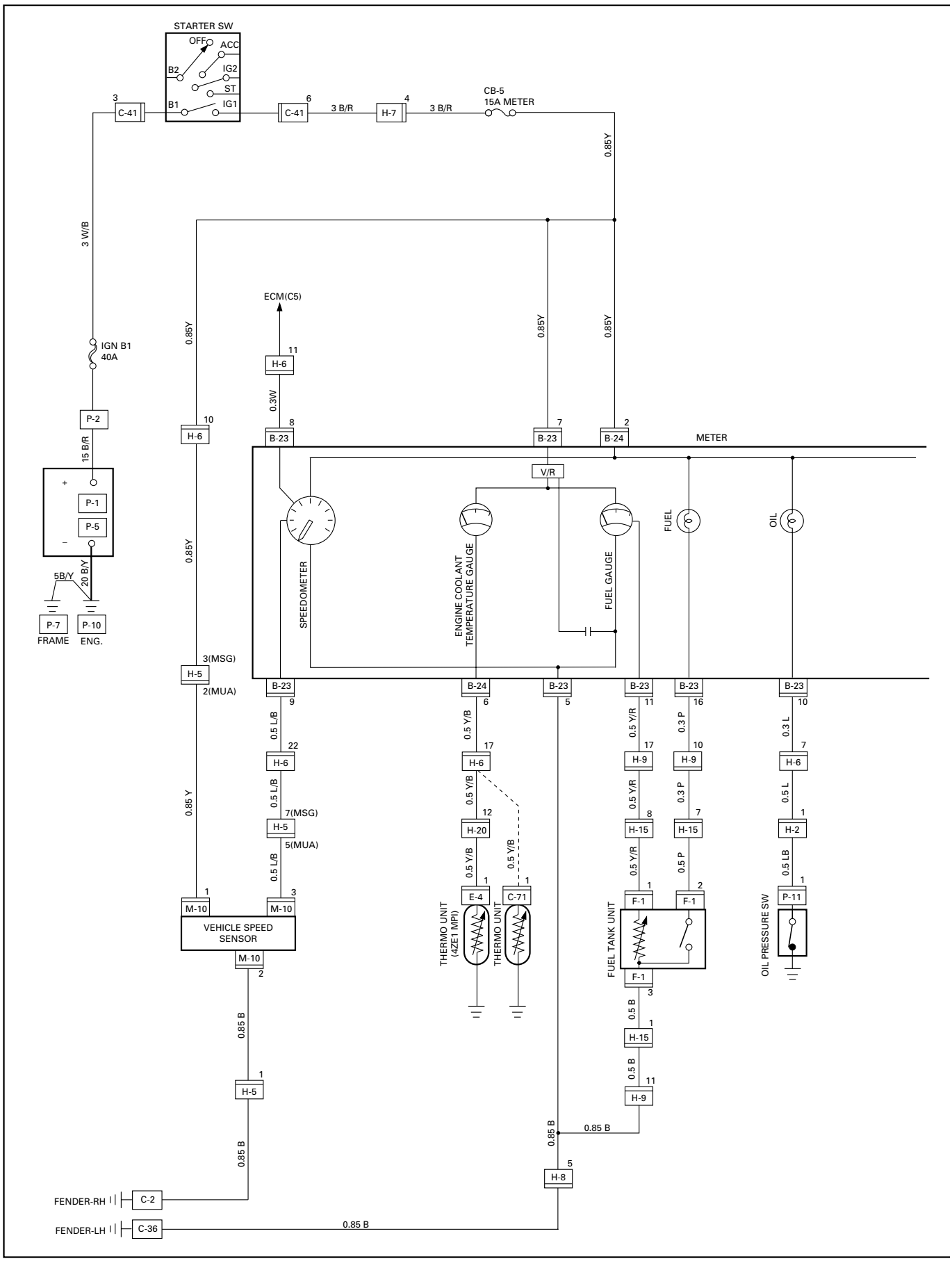

D08RV997

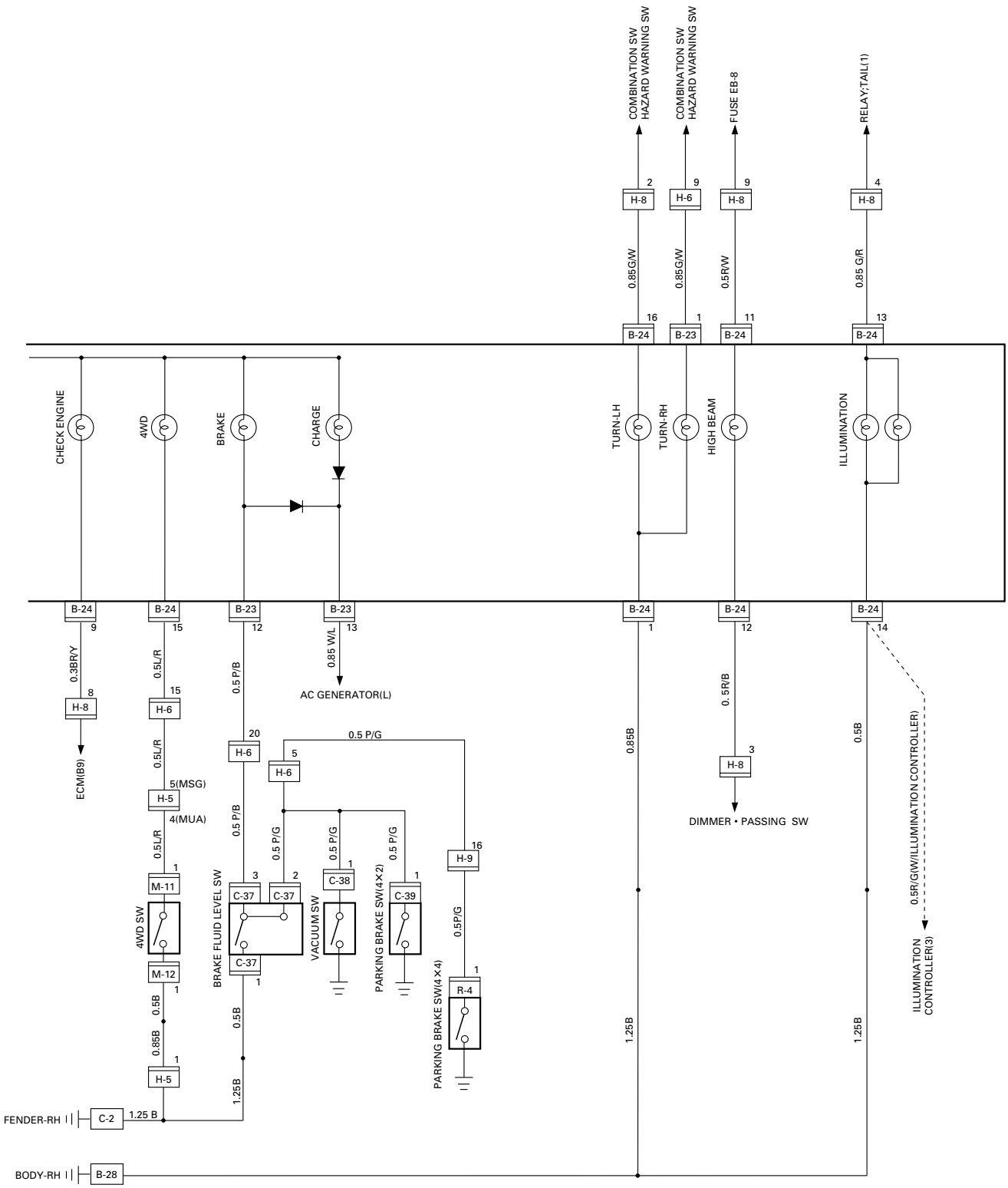
COMBINATION SW HAZARD WARNING SW
COMBINATION SW HAZARD WARNING SW
FUSE EB-8
RELAY;TAIL(1)
H-8
H-6
H-8
H-8
0.85G/W
0.85G/W
0.5R/W
0.85 G/R
B-24
B-23
B-24
B-24
CHECK ENGINE
4WD
BRAKE
CHARGE
TURN-LH
TURN-RH
HIGH BEAM
ILLUMINATION
B-24
B-24
B-23
B-23
B-24
B-24
B-24
0.3BR/Y
0.5L/R
0.5 P/B
0.85 W/L
AC GENERATOR(L)
0.5R/B
H-8
H-6
H-6
H-6
H-8
ECM(B9)
5(MSG)
H-5
4(MUA)
0.5 P/G
0.85B
0.5B
DIMMER • PASSING SW
0.5R/G(W/ILLUMINATION CONTROLLER)
ILLUMINATION CONTROLLER(3)
M-11
4WD SW
M-12
H-5
BRAKE FLUID LEVEL SW
C-37
C-37
C-37
VACUUM SW
C-38
PARKING BRAKE SW(4×2)
C-39
H-9
PARKING BRAKE SW(4×4)
R-4
0.5P/G
0.5B
0.85B
1.25B
FENDER-RH
C-2
1.25 B
BODY-RH
B-28

D08RV999

CIRCUIT DIAGRAM (W/O TACHOMETER – DIESEL ENGINE (LHD))

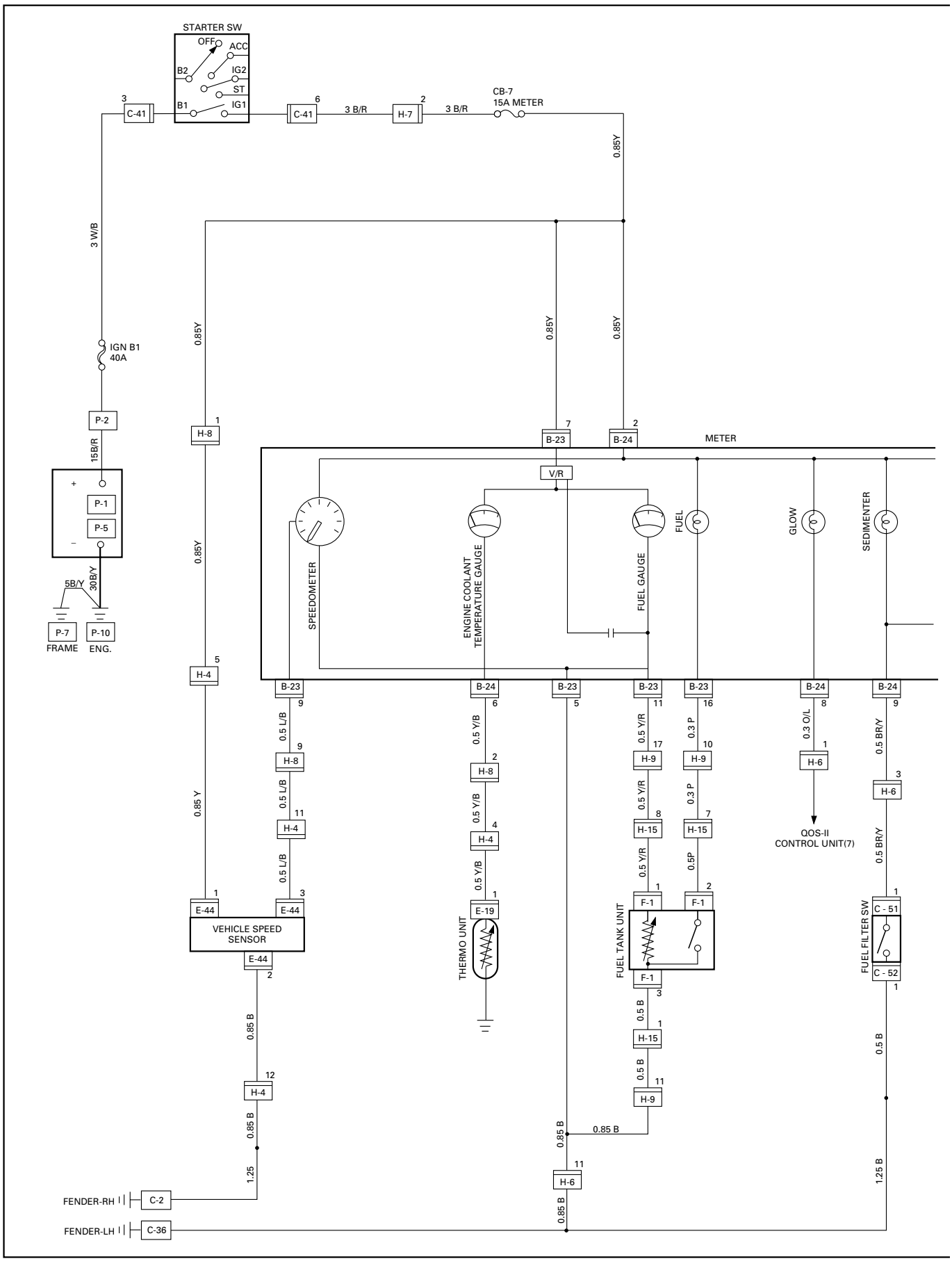

D08RVA03

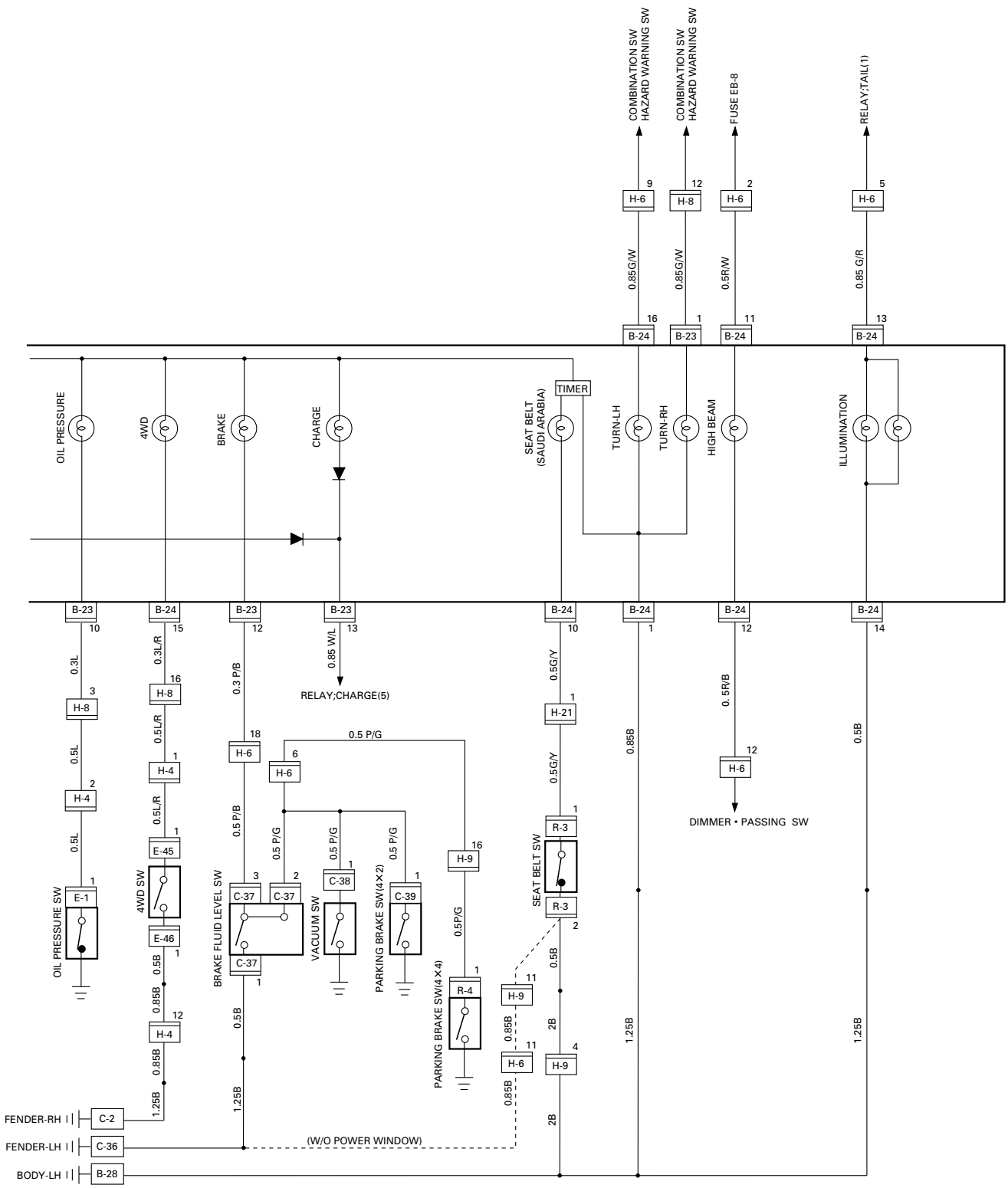
COMBINATION SW HAZARD WARNING SW
COMBINATION SW HAZARD WARNING SW
FUSE EB-8
RELAY;TAIL(1)
H-6
H-8
H-6
H-6
0.85G/W
0.85G/W
0.5R/W
0.85 G/R
B-24
B-23
B-24
B-24
OIL PRESSURE
4WD
BRAKE
CHARGE
SEAT BELT (SAUDI ARABIA)
TIMER
TURN-LH
TURN-RH
HIGH BEAM
ILLUMINATION
B-23
B-24
B-23
B-23
B-24
B-24
B-24
B-24
0.3L
0.3L/R
0.3 P/B
0.85 W/L
RELAY;CHARGE(5)
0.5G/Y
0.5R/B
H-8
H-8
H-6
H-6
H-21
H-6
0.5 P/G
0.5L
0.5L/R
0.5 P/B
0.5 P/G
0.5 P/G
0.5 P/G
0.5G/Y
0.85B
0.5B
H-4
H-4
H-9
R-3
DIMMER • PASSING SW
E-45
E-1
4WD SW
C-37
C-37
C-38
C-39
SEAT BELT SW
R-3
OIL PRESSURE SW
E-46
BRAKE FLUID LEVEL SW
VACUUM SW
PARKING BRAKE SW(4×2)
0.5P/G
0.5B
0.85B
0.5B
R-4
H-9
H-4
0.85B
0.5B
2B
1.25B
1.25B
PARKING BRAKE SW(4×4)
H-6
H-9
0.85B
1.25B
1.25B
2B
FENDER-RH
C-2
FENDER-LH
C-36
(W/O POWER WINDOW)
BODY-LH
B-28

D08RVA05

CIRCUIT DIAGRAM (W/O TACHOMETER – DIESEL ENGINE (RHD))

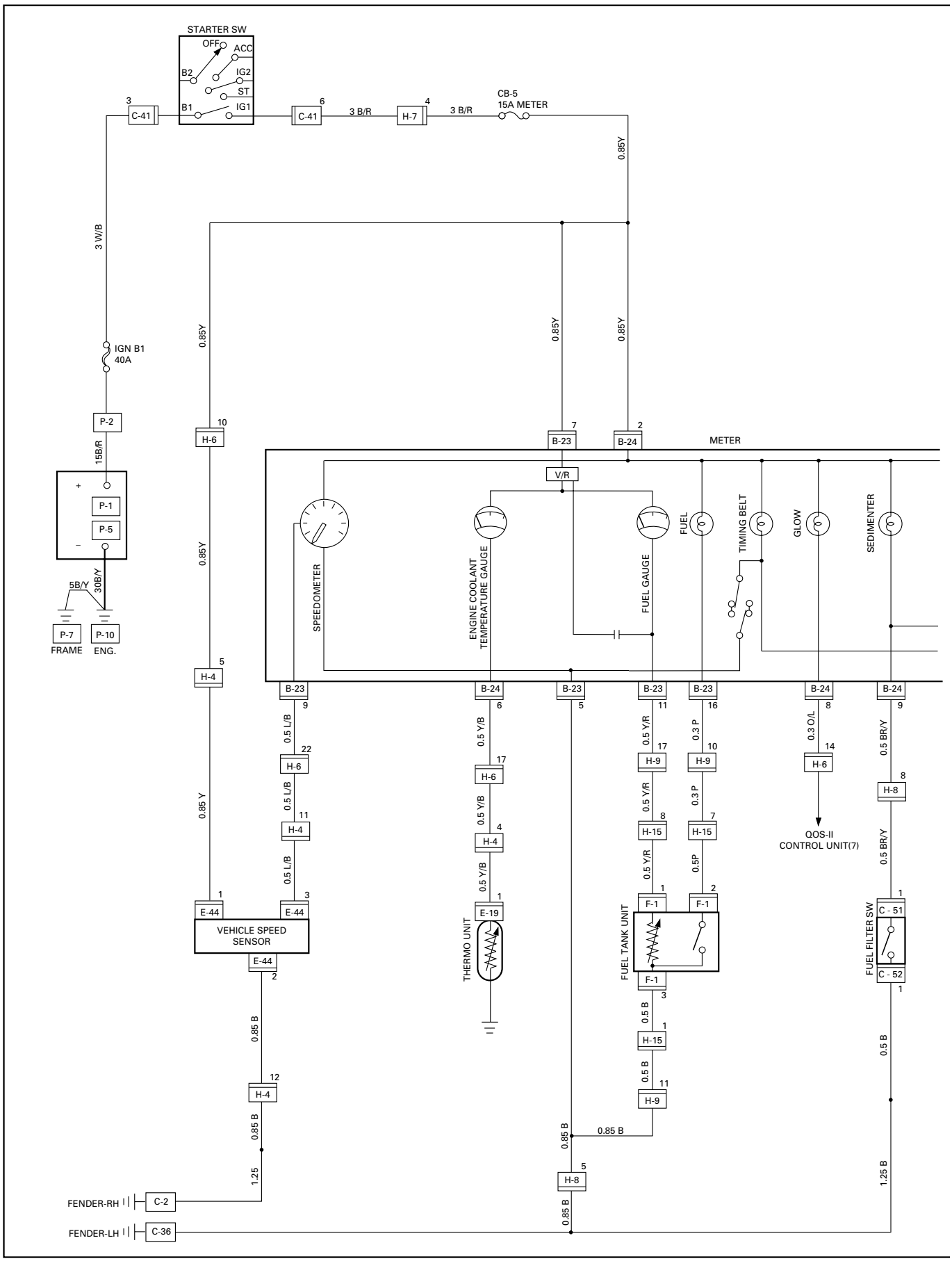

D08RVA06

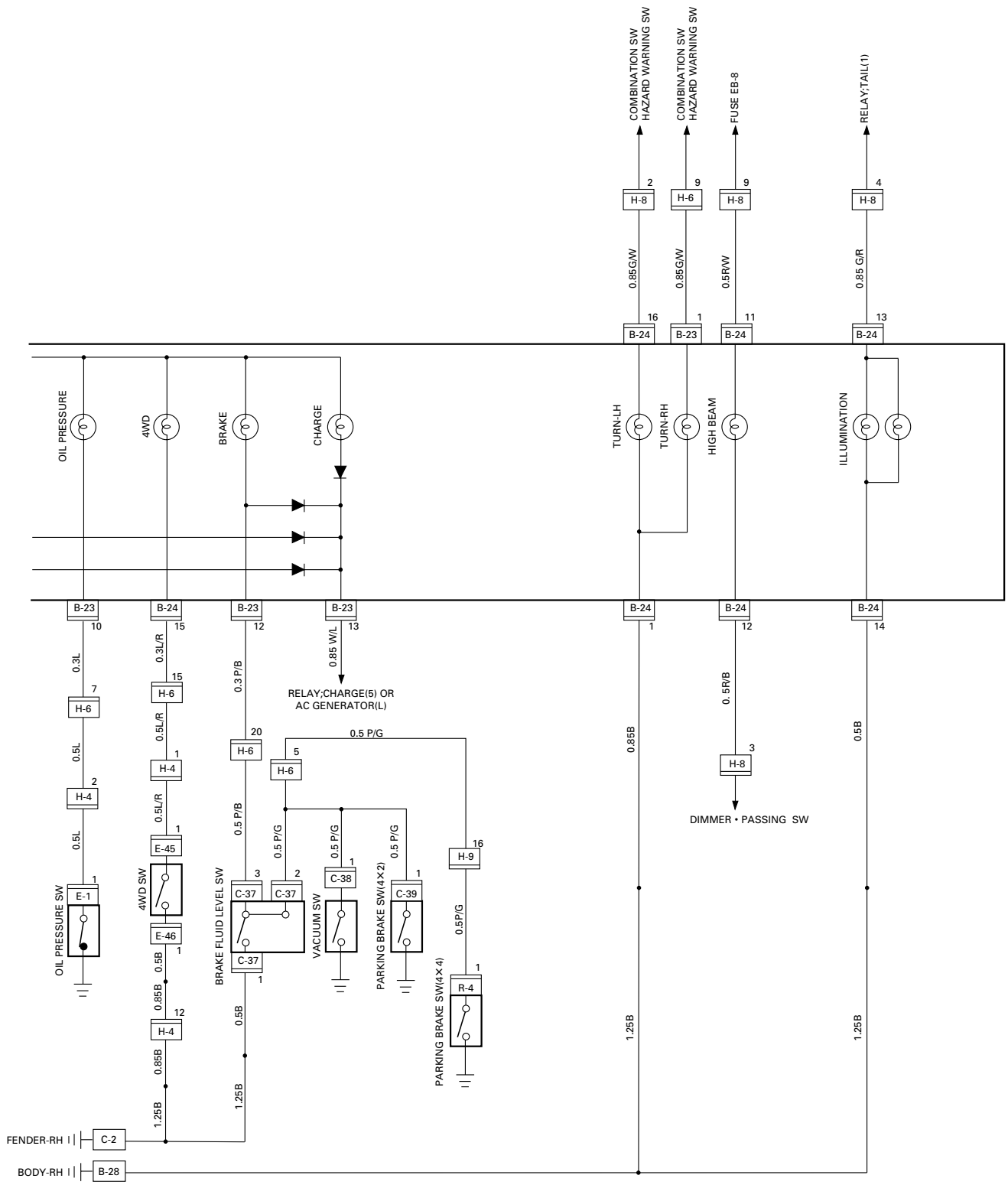
COMBINATION SW HAZARD WARNING SW
COMBINATION SW HAZARD WARNING SW
FUSE EB-8
RELAY;TAIL(1)
H-8
H-6
H-8
H-8
0.85G/W
0.85G/W
0.5R/W
0.85 G/R
B-24
B-23
B-24
B-24
OIL PRESSURE
4WD
BRAKE
CHARGE
TURN-LH
TURN-RH
HIGH BEAM
ILLUMINATION
B-23
B-24
B-23
B-23
B-24
B-24
B-24
0.3L
0.3L/R
0.3 P/B
0.85 W/L
RELAY;CHARGE(5) OR AC GENERATOR(L)
0.5 P/G
0.5L
0.5L/R
0.5 P/B
0.5 P/G
0.5 P/G
0.5 P/G
0.85B
0.5 R/B
0.5B
H-6
H-4
E-45
E-46
E-1
H-9
R-4
H-8
DIMMER • PASSING SW
OIL PRESSURE SW
4WD SW
BRAKE FLUID LEVEL SW
VACUUM SW
PARKING BRAKE SW(4×2)
PARKING BRAKE SW(4×4)
C-37
C-38
C-39
0.5B
0.85B
1.25B
FENDER-RH
C-2
BODY-RH
B-28

D08RVA07

CIRCUIT DIAGRAM (W/ TACHOMETER – GASOLINE ENGINE (LHD))

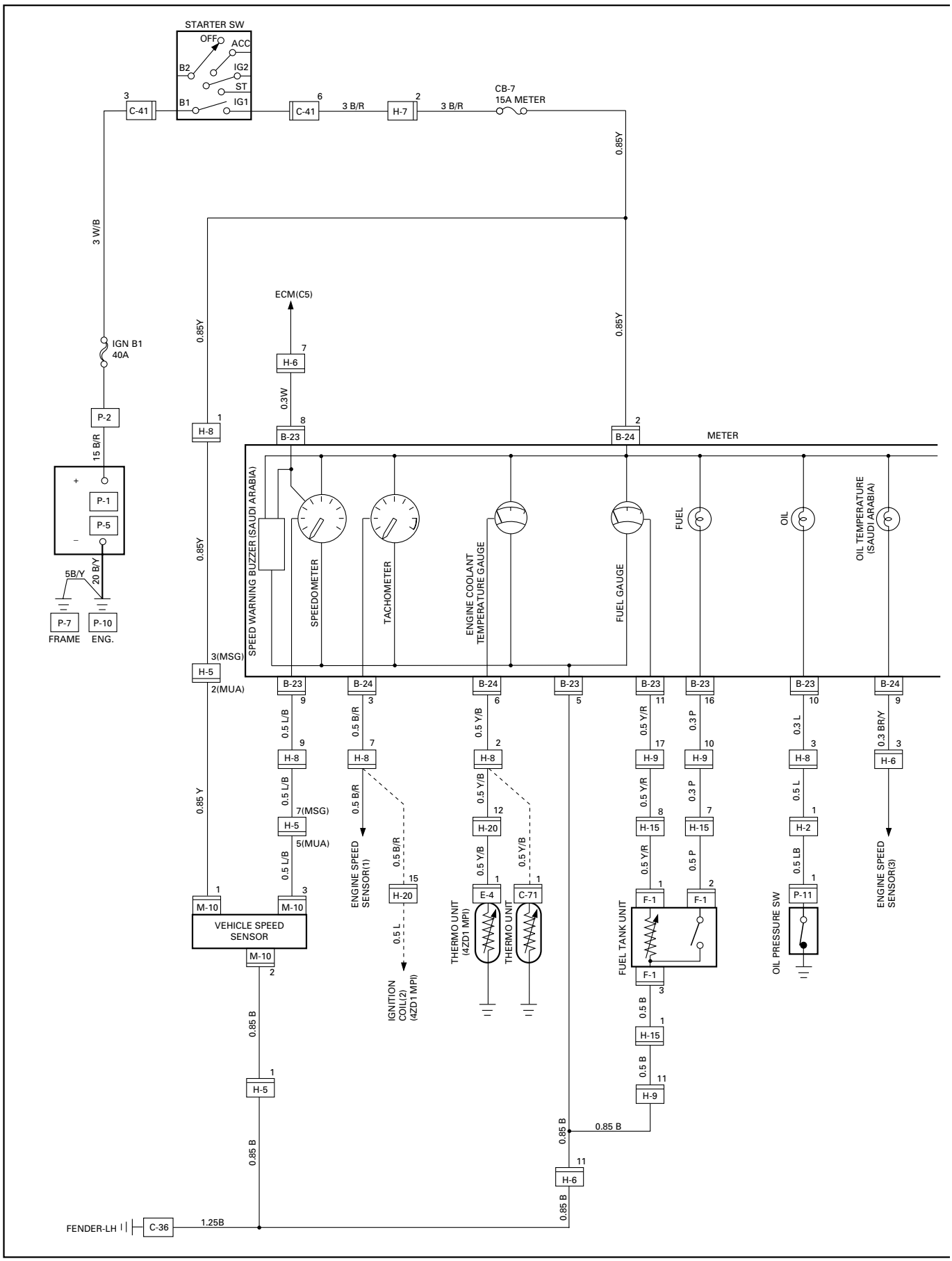

D08RV993

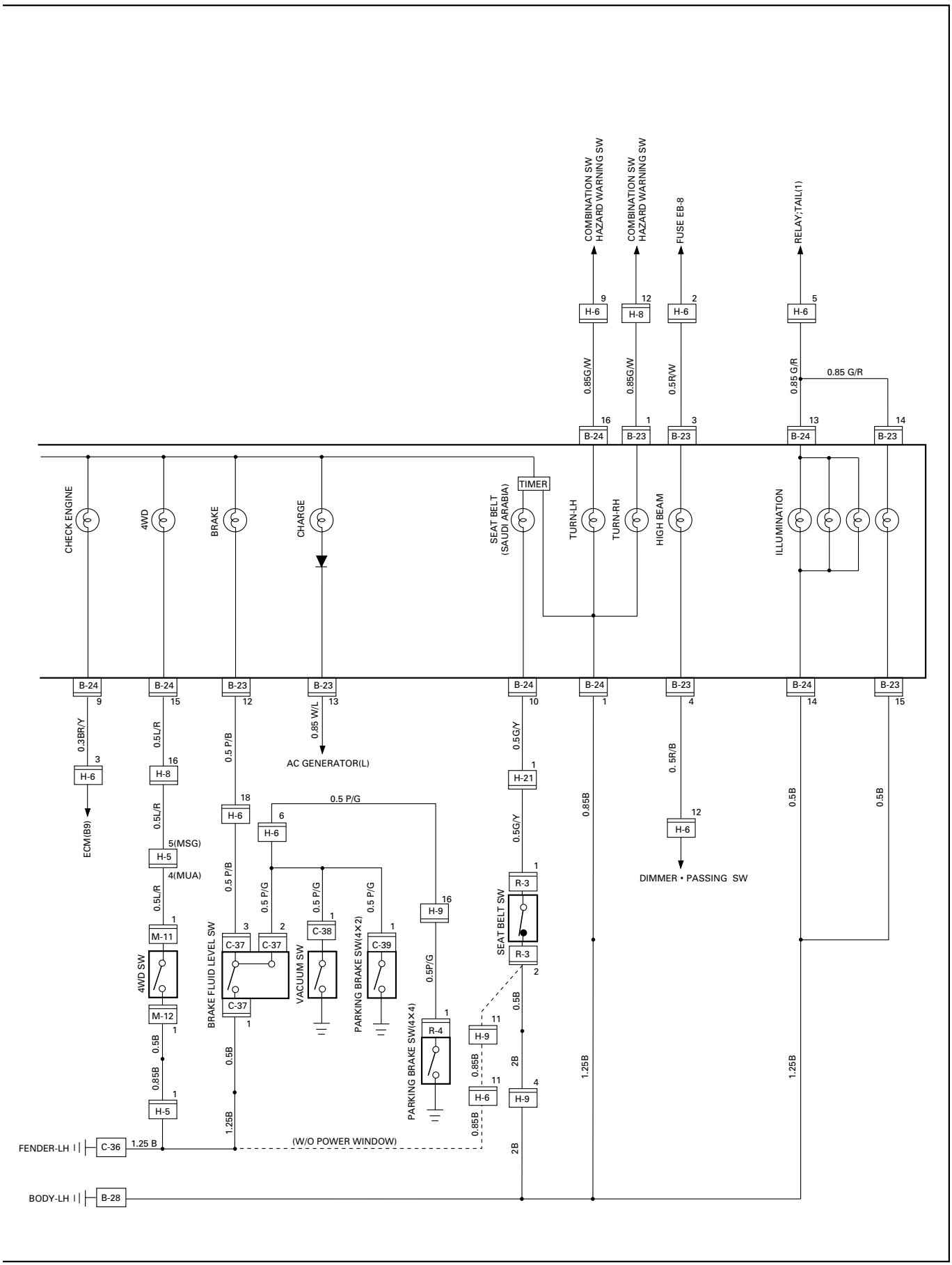
COMBINATION SW HAZARD WARNING SW
COMBINATION SW HAZARD WARNING SW
FUSE EB-8
RELAY;TAIL(1)
H-6
H-8
H-6
H-6
0.85G/W
0.85G/W
0.5R/W
0.85 G/R
0.85 G/R
B-24
B-23
B-23
B-24
B-23
CHECK ENGINE
4WD
BRAKE
CHARGE
SEAT BELT (SAUDI ARABIA)
TIMER
TURN-LH
TURN-RH
HIGH BEAM
ILLUMINATION
B-24
B-24
B-23
B-23
B-24
B-24
B-23
B-24
B-23
0.3BR/Y
0.5L/R
0.5 P/B
0.85 W/L
AC GENERATOR(L)
0.5G/Y
0.5R/B
0.5B
0.5B
H-6
ECM(B9)
H-8
H-5
5(MSG)
4(MUA)
H-6
0.5 P/G
H-6
H-21
H-6
DIMMER • PASSING SW
0.85B
M-11
4WD SW
M-12
H-5
BRAKE FLUID LEVEL SW
C-37
C-37
C-37
VACUUM SW
C-38
PARKING BRAKE SW(4×2)
C-39
H-9
0.5P/G
PARKING BRAKE SW(4×4)
R-4
H-9
H-6
H-9
R-3
SEAT BELT SW
R-3
0.5B
2B
1.25B
1.25B
1.25B
1.25B
(W/O POWER WINDOW)
FENDER-LH
C-36
BODY-LH
B-28

D08RV994

CIRCUIT DIAGRAM (W/ TACHOMETER – GASOLINE ENGINE 6VD1 – LHD)

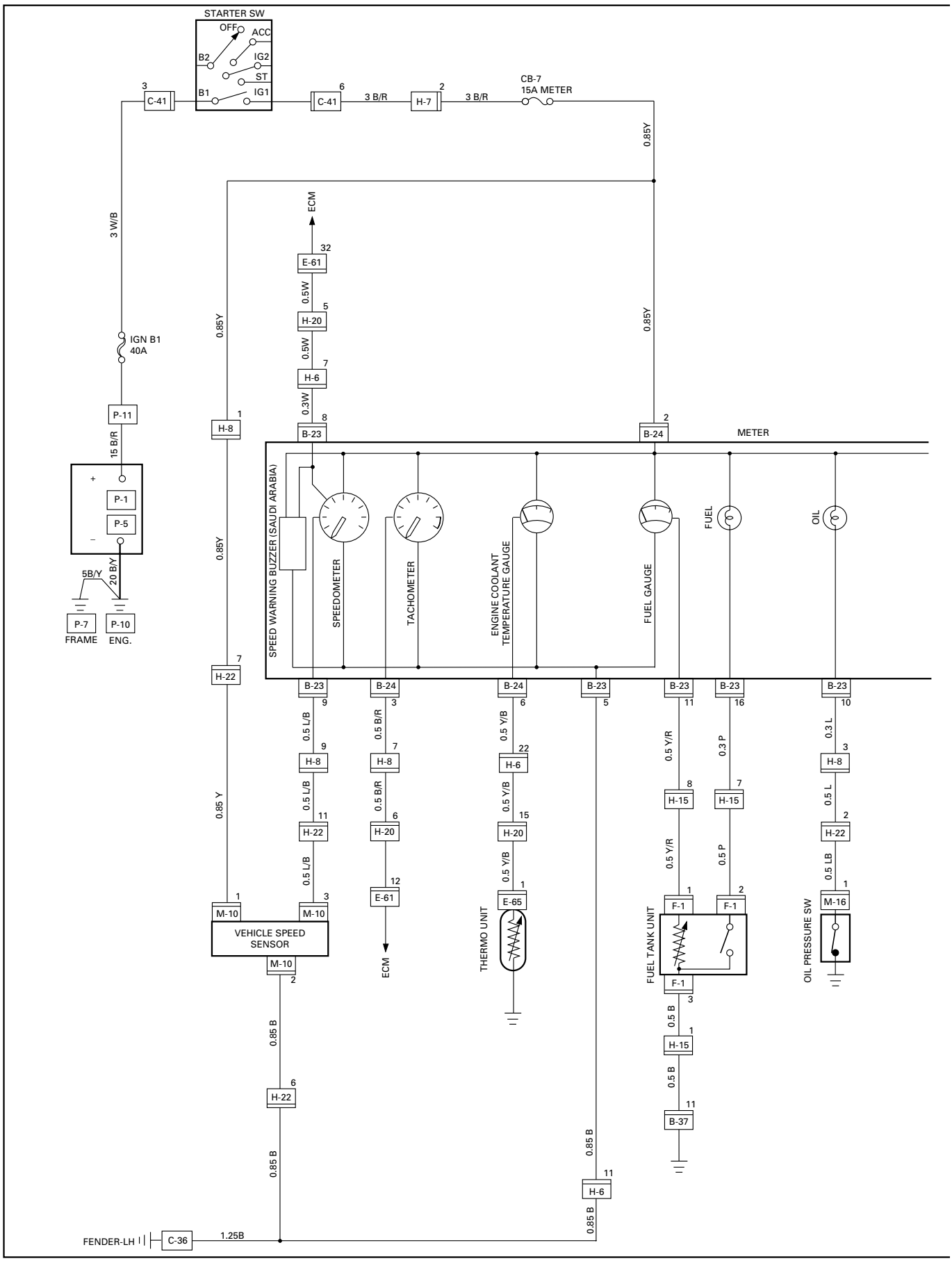

D08RW572-1

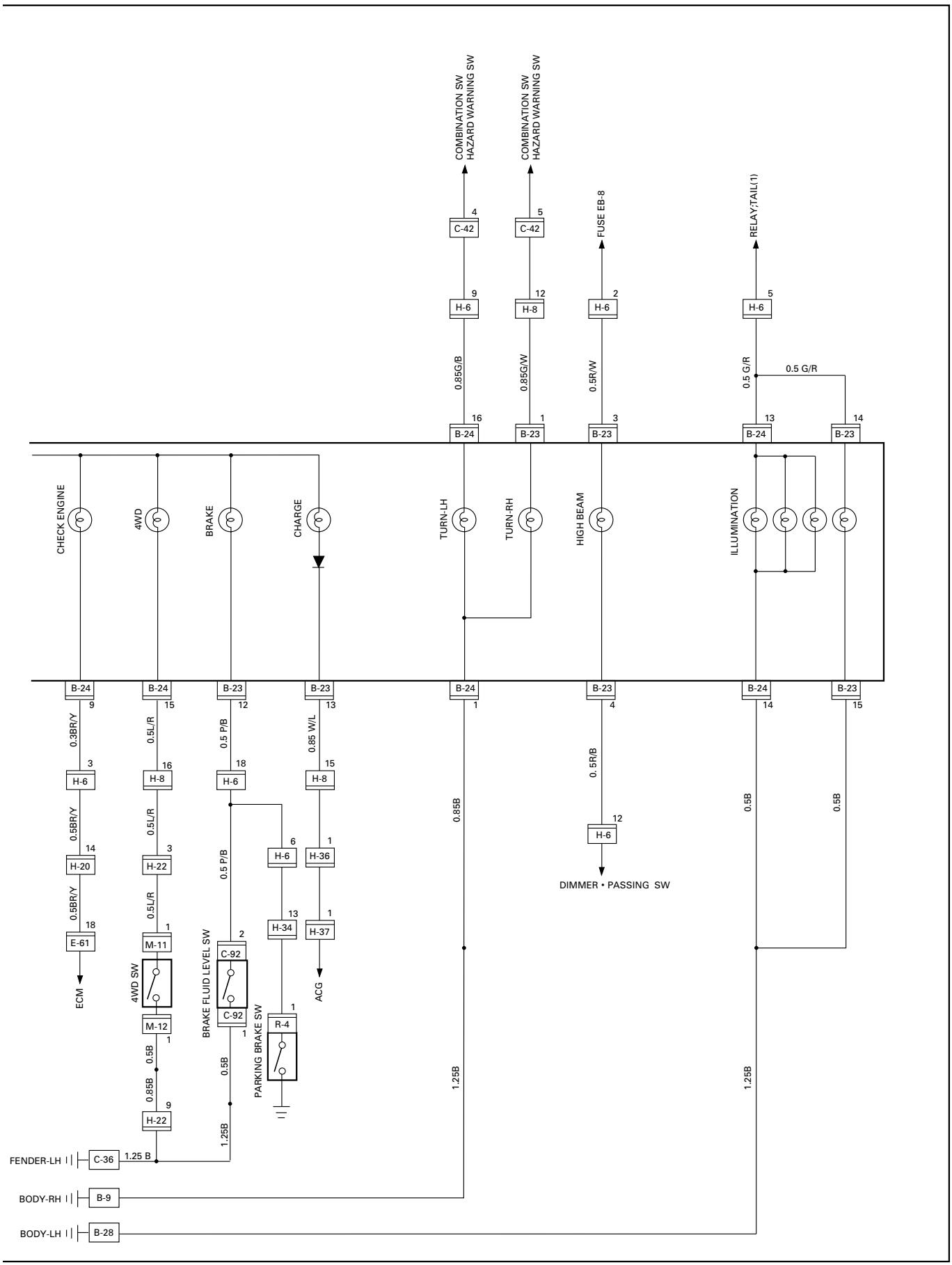
COMBINATION SW
HAZARD WARNING SW
COMBINATION SW
HAZARD WARNING SW
FUSE EB-8
RELAY;TAIL(1)
C-42
C-42
H-6
H-8
H-6
H-6
0.85G/B
0.85G/W
0.5R/W
0.5 G/R
0.5 G/R
B-24
B-23
B-23
B-24
B-23
CHECK ENGINE
4WD
BRAKE
CHARGE
TURN-LH
TURN-RH
HIGH BEAM
ILLUMINATION
B-24
B-24
B-23
B-23
B-24
B-23
B-24
B-23
0.3BR/Y
0.5L/R
0.5 P/B
0.85 W/L
0.85B
0.5 R/B
0.5B
0.5B
H-6
H-8
H-6
H-8
H-6
0.5BR/Y
0.5L/R
0.5 P/B
H-20
H-22
H-6
H-36
H-6
0.5BR/Y
0.5L/R
H-34
H-37
E-61
M-11
C-92
R-4
ECM
4WD SW
BRAKE FLUID LEVEL SW
PARKING BRAKE SW
ACG
DIMMER • PASSING SW
M-12
C-92
0.5B
0.85B
0.5B
1.25B
1.25B
1.25B
H-22
FENDER-LH
C-36
1.25 B
BODY-RH
B-9
BODY-LH
B-28

D08RW571

CIRCUIT DIAGRAM (W/ TACHOMETER – GASOLINE ENGINE (RHD))

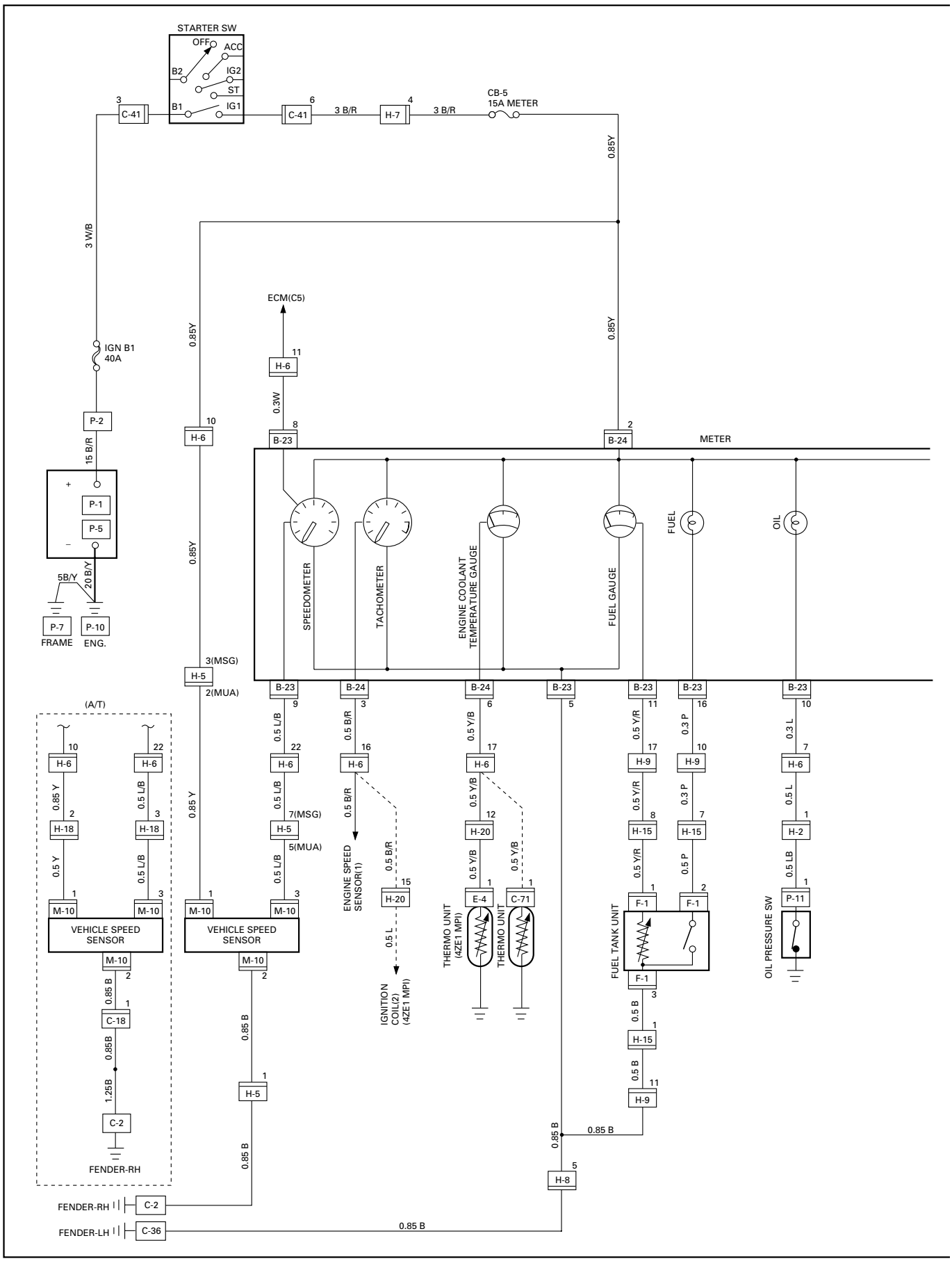

D08RV992

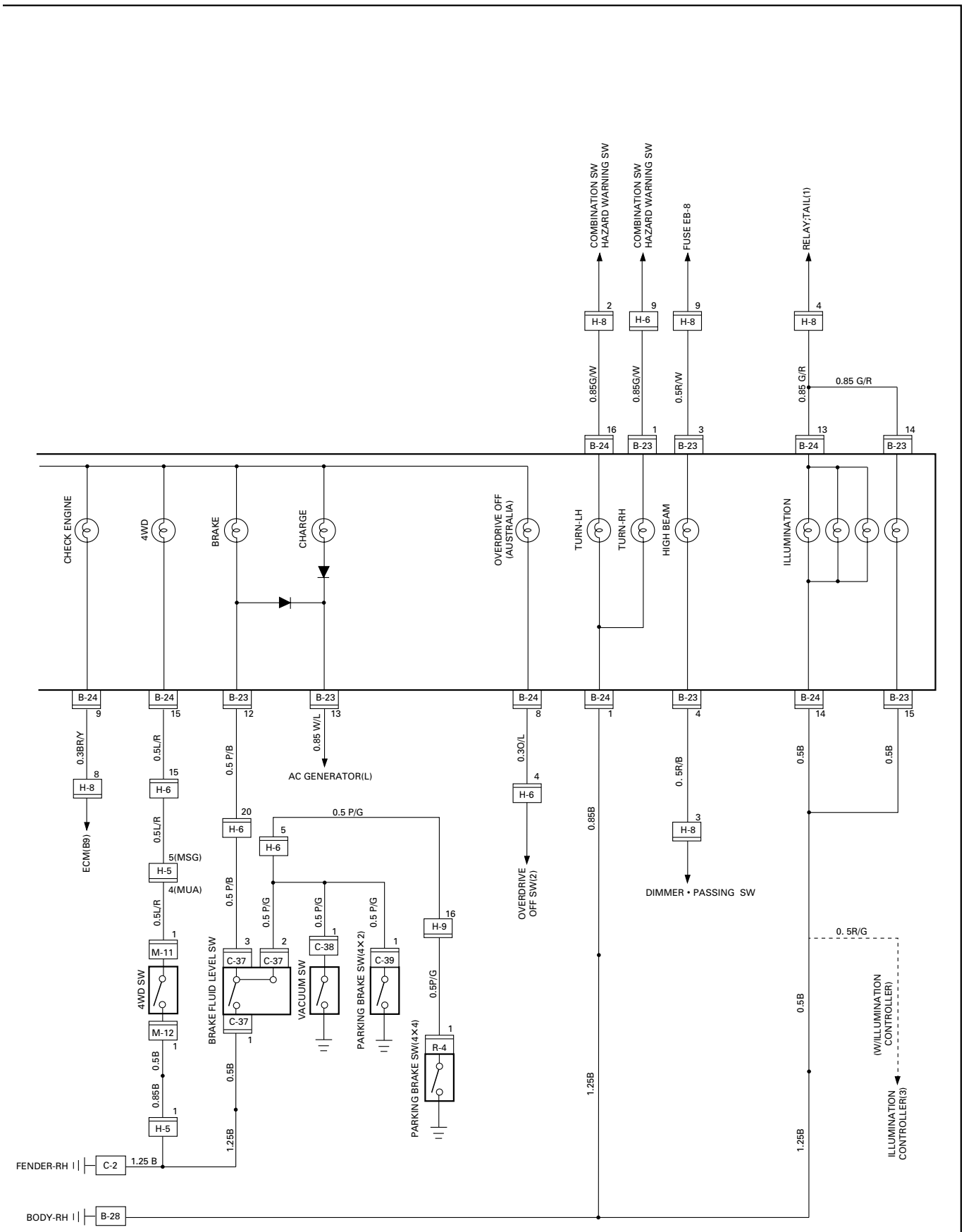
COMBINATION SW HAZARD WARNING SW
COMBINATION SW HAZARD WARNING SW
FUSE EB-8
RELAY:TAIL(1)
H-8
H-6
H-8
H-8
0.85G/W
0.85G/W
0.5R/W
0.85 G/R
0.85 G/R
B-24
B-23
B-23
B-24
B-23
CHECK ENGINE
4WD
BRAKE
CHARGE
OVERDRIVE OFF (AUSTRALIA)
TURN-LH
TURN-RH
HIGH BEAM
ILLUMINATION
B-24
B-24
B-23
B-23
B-24
B-24
B-23
B-24
B-23
0.3BR/Y
0.5L/R
0.5 P/B
0.85 W/L
AC GENERATOR(L)
0.3O/L
0.85B
0. 5R/B
0.5B
0.5B
H-8
H-6
H-6
H-6
H-8
ECM(B9)
0.5 P/G
5(MSG)
H-5
4(MUA)
OVERDRIVE OFF SW(2)
DIMMER • PASSING SW
0.5 P/G
0.5 P/G
0.5 P/G
H-9
0. 5R/G
M-11
C-37
C-37
C-38
C-39
4WD SW
BRAKE FLUID LEVEL SW
VACUUM SW
PARKING BRAKE SW(4X2)
0.5P/G
M-12
C-37
R-4
0.5B
0.85B
0.5B
1.25B
1.25B
1.25B
(W/ILLUMINATION CONTROLLER)
ILLUMINATION CONTROLLER(3)
H-5
FENDER-RH
C-2
1.25 B
PARKING BRAKE SW(4X4)
BODY-RH
B-28

D08RV995

CIRCUIT DIAGRAM (W/ TACHOMETER – GASOLINE ENGINE 6VD1 – RHD)

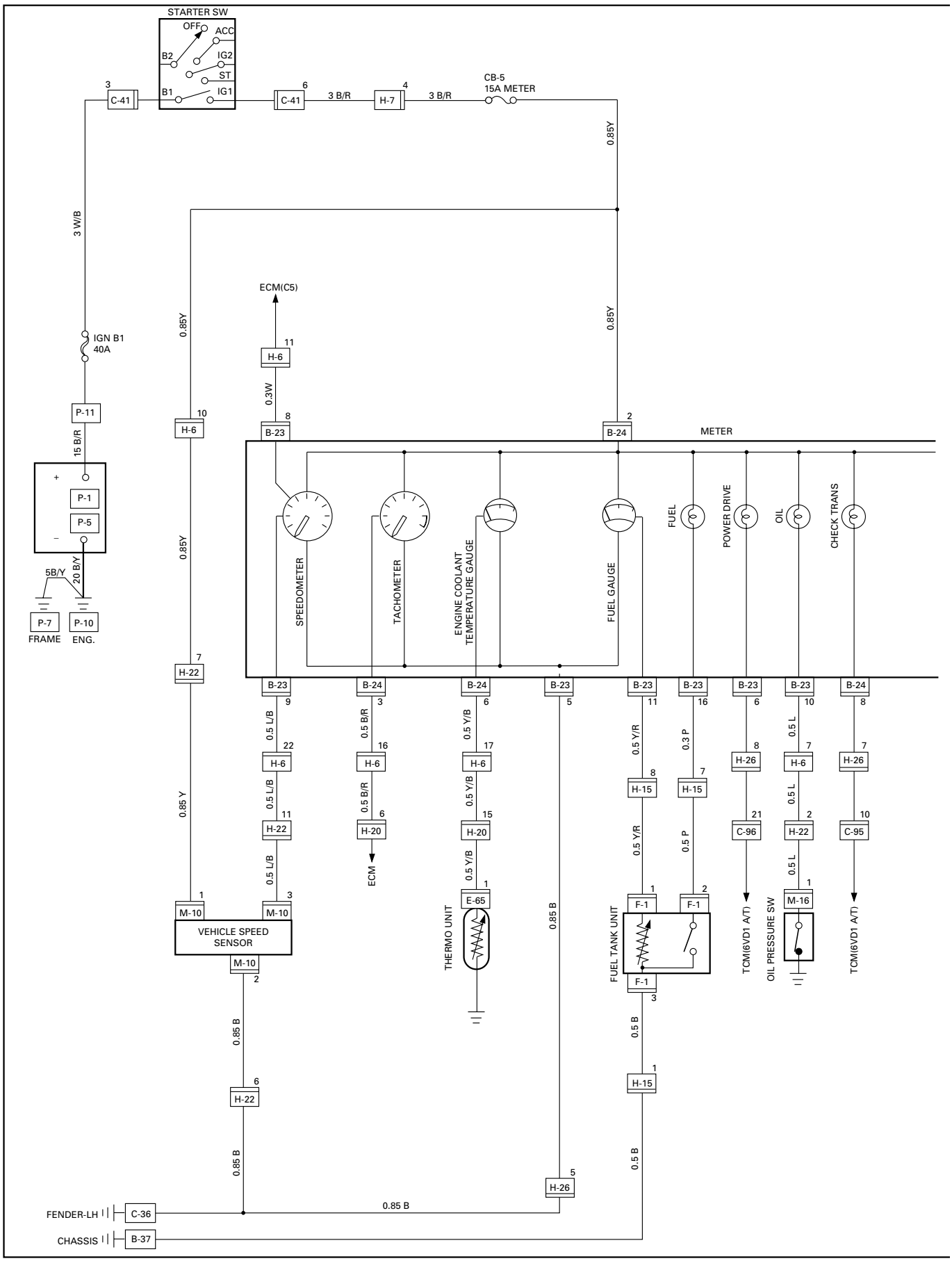

D08RW558

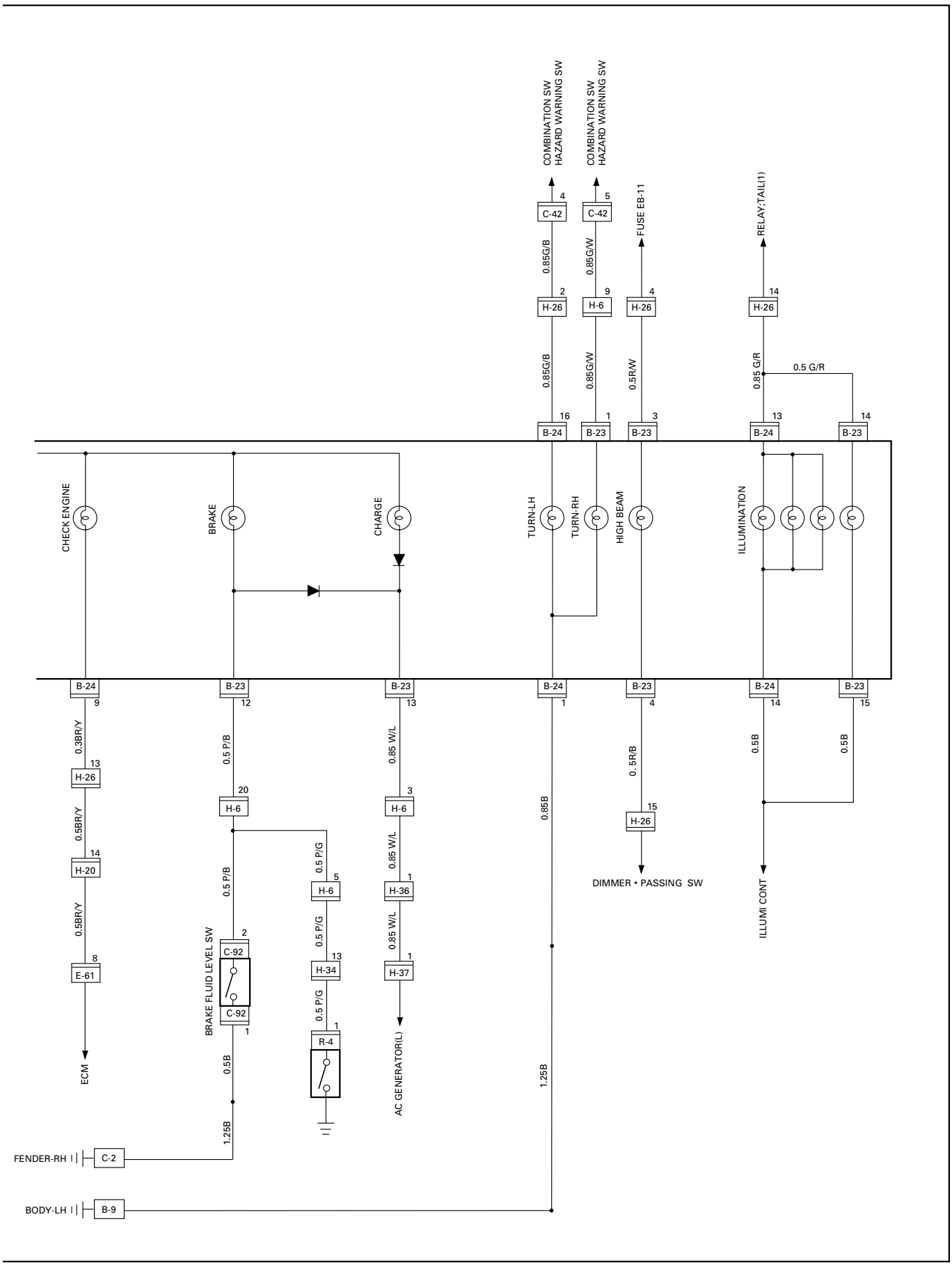
COMBINATION SW
HAZARD WARNING SW
COMBINATION SW
HAZARD WARNING SW
FUSE EB-11
RELAY;TAIL(1)
C-42
C-42
0.85G/B
0.85G/W
H-26
H-6
H-26
H-26
0.85G/B
0.85G/W
0.5R/W
0.85 G/R
0.5 G/R
B-24
B-23
B-23
B-24
B-23
CHECK ENGINE
BRAKE
CHARGE
TURN-LH
TURN-RH
HIGH BEAM
ILLUMINATION
B-24
B-23
B-23
B-24
B-23
B-24
B-23
0.3BR/Y
0.5 P/B
0.85 W/L
0. 5R/B
0.5B
0.5B
H-26
H-6
H-6
H-26
0.5BR/Y
0.85B
H-20
0.5 P/G
H-6
0.85 W/L
H-36
DIMMER • PASSING SW
ILLUMI CONT
0.5BR/Y
0.5 P/B
C-92
0.5 P/G
H-34
0.85 W/L
H-37
E-61
BRAKE FLUID LEVEL SW
C-92
R-4
ECM
0.5B
AC GENERATOR(L)
1.25B
1.25B
FENDER-RH
C-2
BODY-LH
B-9

D08RW573

CIRCUIT DIAGRAM (W/ TACHOMETER – DIESEL ENGINE (LHD))

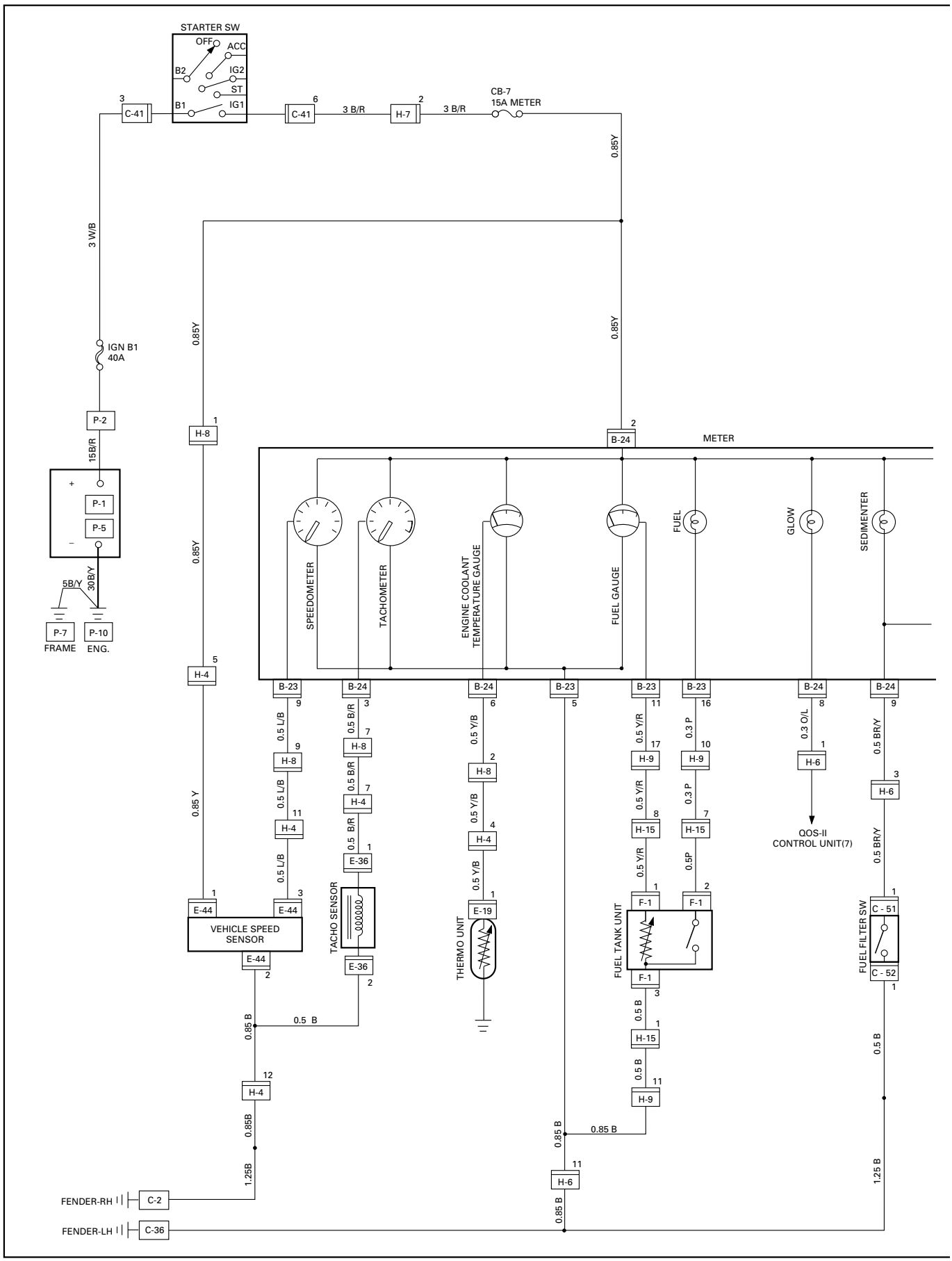

D08RVA00

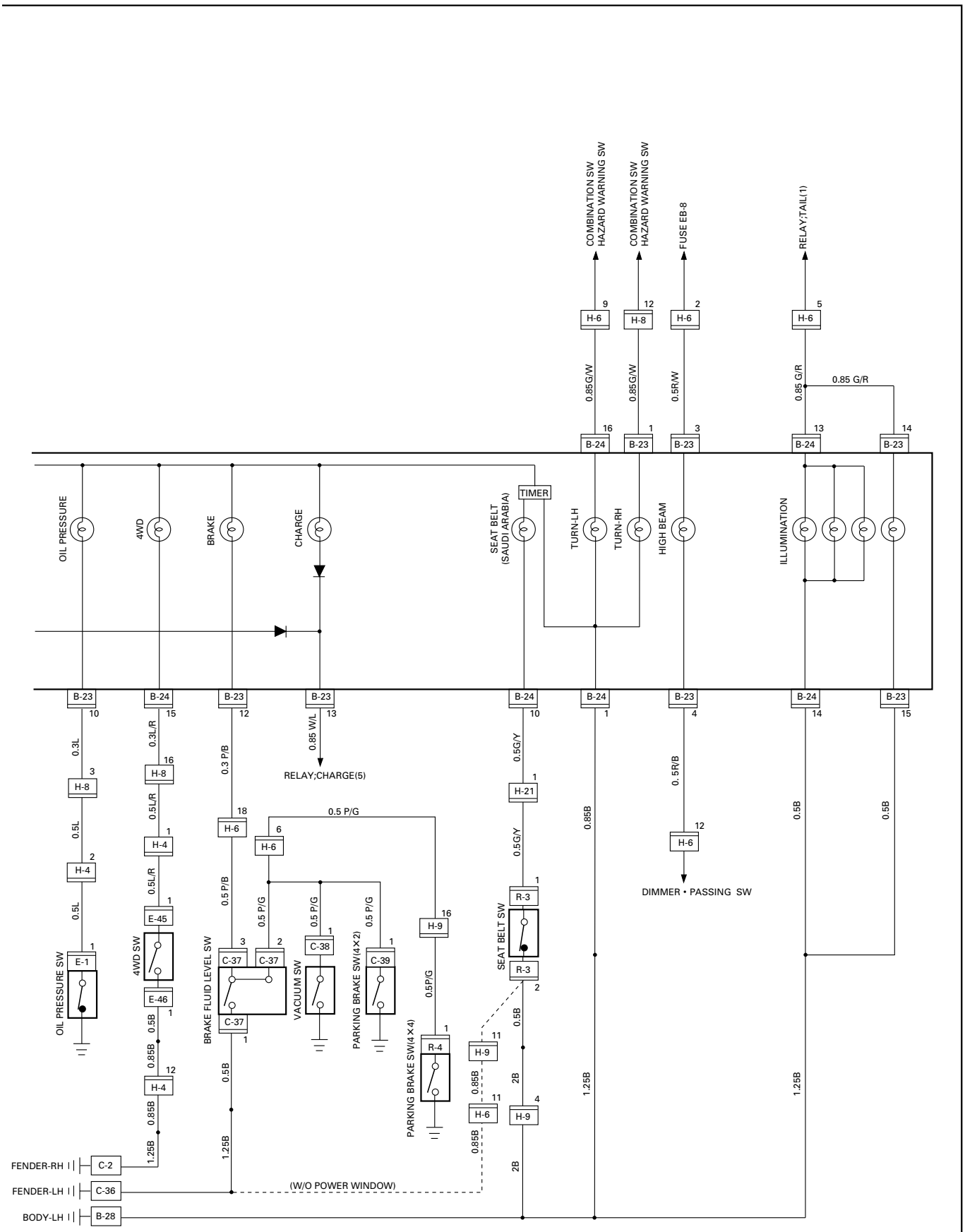
COMBINATION SW HAZARD WARNING SW
COMBINATION SW HAZARD WARNING SW
FUSE EB-8
RELAY;TAIL(1)
H-6
H-8
H-6
H-6
0.85G/W
0.85G/W
0.5R/W
0.85 G/R
0.85 G/R
B-24
B-23
B-23
B-24
B-23
OIL PRESSURE
4WD
BRAKE
CHARGE
TIMER
SEAT BELT (SAUDI ARABIA)
TURN-LH
TURN-RH
HIGH BEAM
ILLUMINATION
B-23
B-24
B-23
B-23
B-24
B-24
B-23
B-24
B-23
0.3L
0.3L/R
0.3 P/B
0.85 W/L
RELAY;CHARGE(5)
0.5G/Y
0.5R/B
H-8
H-8
H-6
H-6
H-21
H-6
0.5L
0.5L/R
0.5 P/G
0.5G/Y
0.85B
0.5B
0.5B
H-4
H-4
H-6
DIMMER • PASSING SW
0.5L
0.5L/R
0.5 P/B
0.5 P/G
0.5 P/G
0.5 P/G
R-3
E-45
H-9
SEAT BELT SW
OIL PRESSURE SW
4WD SW
BRAKE FLUID LEVEL SW
VACUUM SW
PARKING BRAKE SW(4×2)
E-1
C-37
C-37
C-38
C-39
R-3
E-46
0.5P/G
0.5B
0.5B
0.85B
0.5B
0.85B
R-4
H-9
H-4
0.5B
0.85B
2B
1.25B
1.25B
0.85B
H-6
H-9
1.25B
1.25B
0.85B
2B
FENDER-RH
C-2
FENDER-LH
C-36
(W/O POWER WINDOW)
BODY-LH
B-28

D08RVA01

CIRCUIT DIAGRAM (W/ TACHOMETER – DIESEL ENGINE (RHD))

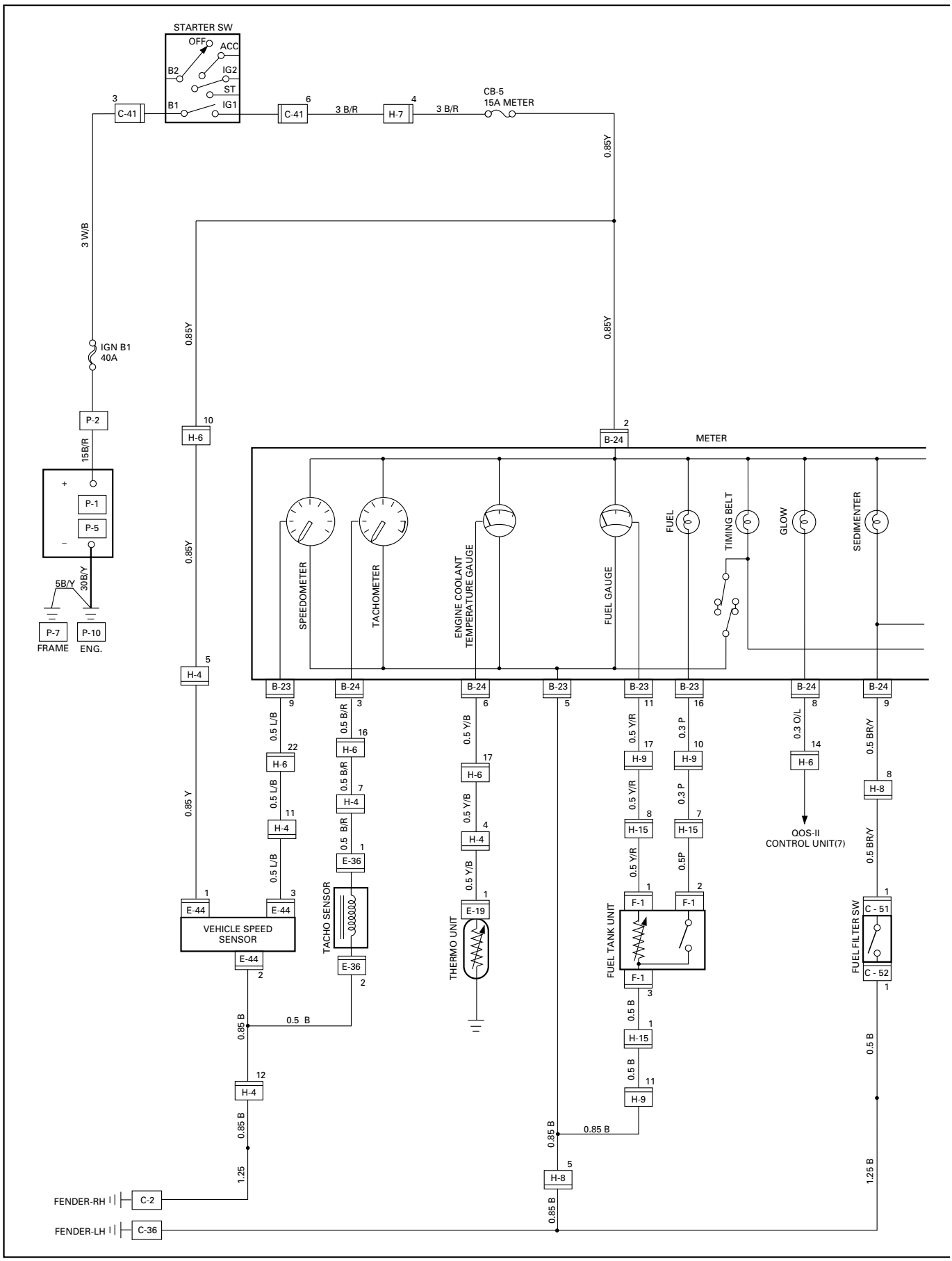

D08RVA02

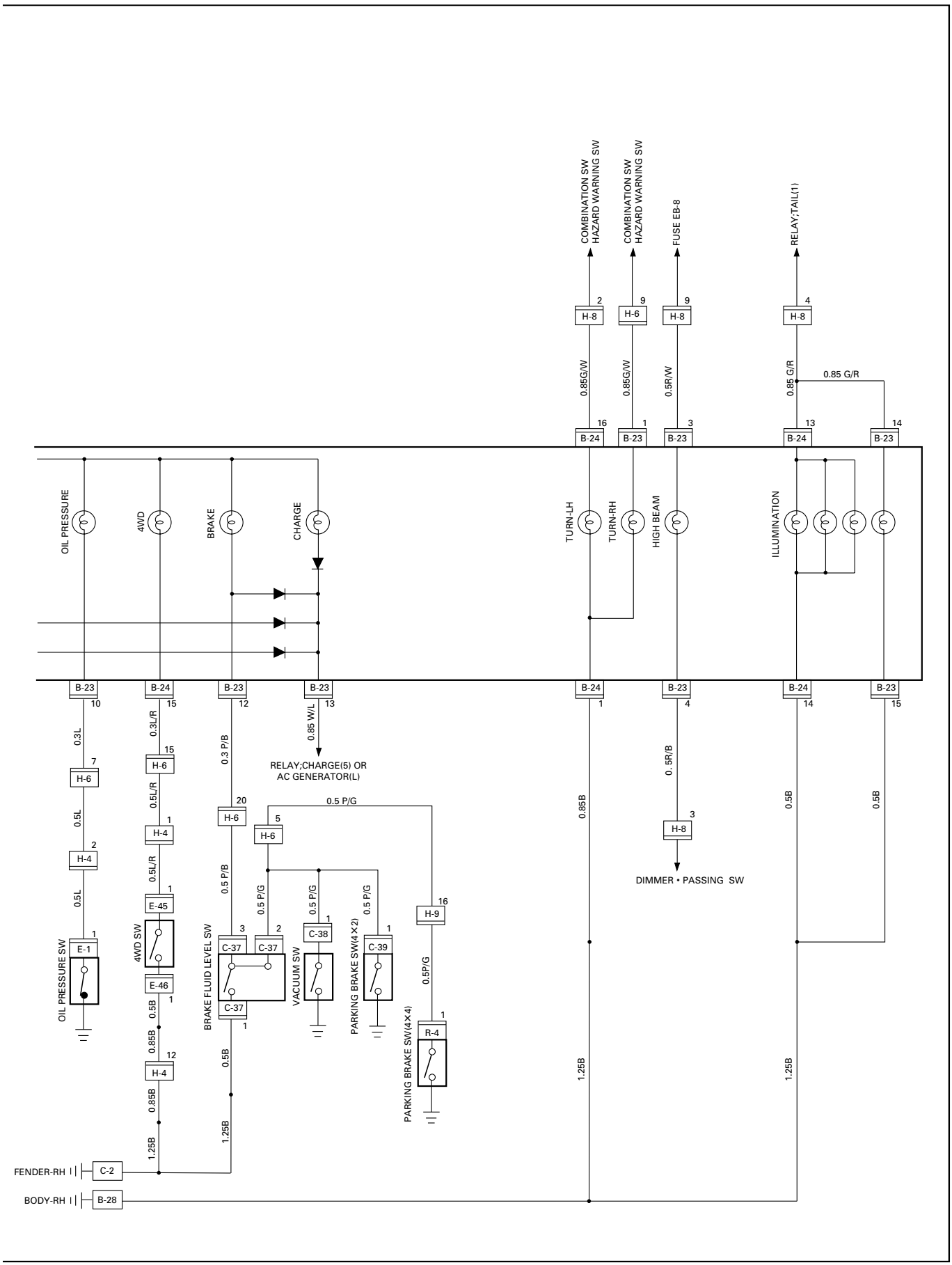
COMBINATION SW
HAZARD WARNING SW
COMBINATION SW
HAZARD WARNING SW
FUSE EB-8
RELAY;TAIL(1)
H-8
H-6
H-8
H-8
0.85G/W
0.85G/W
0.5R/W
0.85 G/R
0.85 G/R
B-24
B-23
B-23
B-24
B-23
OIL PRESSURE
4WD
BRAKE
CHARGE
TURN-LH
TURN-RH
HIGH BEAM
ILLUMINATION
B-23
B-24
B-23
B-23
B-24
B-23
B-24
B-23
0.3L
0.3L/R
0.3 P/B
0.85 W/L
RELAY;CHARGE(5) OR
AC GENERATOR(L)
0.5 P/G
0.5 R/B
H-6
H-6
H-6
H-6
H-4
H-4
H-8
DIMMER • PASSING SW
0.5L
0.5L/R
0.5 P/B
0.5 P/G
0.5 P/G
0.5 P/G
0.5B
0.5B
0.5B
0.5L
E-45
H-9
OIL PRESSURE SW
E-1
4WD SW
E-46
BRAKE FLUID LEVEL SW
C-37
C-37
C-37
VACUUM SW
C-38
PARKING BRAKE SW(4×2)
C-39
0.5P/G
PARKING BRAKE SW(4×4)
R-4
0.5B
0.85B
H-4
0.85B
1.25B
0.5B
1.25B
1.25B
1.25B
FENDER-RH
C-2
BODY-RH
B-28

D08RVA04

TROUBLE SHOOTING

SPEEDOMETER

1. Speedometer and odometer do not function

Checkpoint		Trouble Cause		Countermeasure
Check the vehicle speed sensor output (4 pulses/1 rotation)	NG	Vehicle speed sensor malfunction	—	Replace the vehicle speed sensor
OK				
Continuity between the vehicle speed sensor and the meter, or the fuse (LHD: CB-7 (15A)/RHD: CB-5 (15A)) and the ground	NG	Open circuit or poor connector contact	—	Repair an open circuit in the circuit or a poor connection at the connectors
OK				
Use a meter tester to check the speedometer function	NG	Speedometer malfunction	—	Replace the speedometer

2. Speedometer needle fluctuates (May be wide fluctuation)

Check the speed sensor output by using the oscilloscope	NG	Vehicle speed sensor malfunction, or open circuit or poor connector contact	—	Replace the vehicle speed sensor, or repair an open circuit in the circuit or a poor connection at the connectors
OK				
Use a meter tester to check the speedometer function	NG	Speedometer malfunction	—	Replace the speedometer

3. Speedometer needle jumps erratically

Checkpoint		Trouble Cause	Countermeasure
Check the vehicle speed sensor output by using the oscilloscope	NG	Vehicle speed sensor malfunction, or open circuit or poor connector contact	Replace the vehicle speed sensor, or repair an open circuit in the circuit or a poor connection at the connectors
OK			
Use a meter tester to check the speedometer function	NG	Speedometer malfunction	Replace the speedometer

Inspection of a waveform by oscilloscope

1. Connect a resistance of 1.3 to 5k ohm (1.4W or more) between the harness side connectors 2 B-24 and 9 B-23 of the meter.

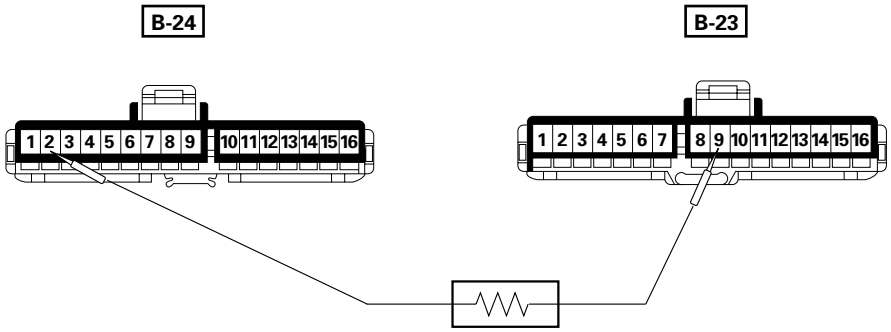

2. Install a speedometer tester.
2. Turn on the starter SW.
3. Check the waveform at the time when the vehicle speed is at 60km/h.

Normal waveform

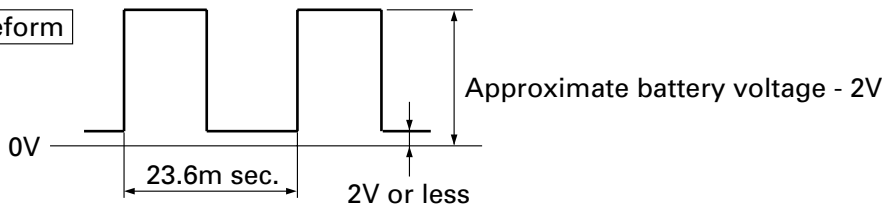

825RV108

4. Trip odometer does not reset

Check at other mileage figures given by meter tester (Reset should be made to zero kilometer)	NG	Faulty reset mechanism or worn gear	Replace the speedometer

TACHOMETER

1. Tachometer does not function when engine is running

Checkpoint		Trouble Cause	Countermeasure
Pulse between connector 3 B-24 and the ground when engine is running (Should be pulse present)	NG	Tacho sensor malfunction, or open circuit or poor connector contact	Replace the tacho sensor, or repair open circuit or connector contact
OK			
Tachometer function	NG	Tachometer malfunction	Replace the tachometer

2. Meter needle fluctuates (May be wide fluctuation)

Use a meter tester to check the tachometer function	NG	Tachometer malfunction	Replace the tachometer

TEMPERATURE GAUGE AND THERMO UNIT

1. No temperature indicates at all

Checkpoint		Trouble Cause	Countermeasure
Thermo unit continuity between connector 1 E-4 (or 1 C-71) and the ground (Diesel engine: 1 E-19 and the ground)	NG	Thermo unit malfunction	Replace the thermo unit
OK			
Gauge function 1. Disconnect the unit connector then connect 3.4W bulb to wire harness side with ground 2. Check indicating point when starter SW. is ON position (Temperature should indicate)	NG	Gauge malfunction	Replace the temperature gauge
OK			
Continuity between 1 E-4 (or 1 C-71) and 6 B-24 (Diesel engine: 1 E-19 and 6 B-24	NG	Open circuit or poor connector contact	Repair open circuit or connector contact

2. Temperature gauge incorrect readings in all ranges

Thermo unit resistance between connector 1 E-4 (or 1 C-71) and the ground (Diesel engine: 1 E-19 and the ground) when disconnecting the connector (Specified resistance should indicate)	NG	Thermo unit malfunction	Replace the thermo unit

FUEL GAUGE AND FUEL TANK UNIT

1. No fuel level indicates at all

Checkpoint		Trouble Cause	Countermeasure
Tank unit continuity between connector 1 F-1 and ground	NG	Open circuit inside the tank unit	Replace the tank unit
OK			
Fuel gauge function 1. Disconnect the tank unit connector then connect 3.4W bulb to wire harness side 2. Check indicating point when starter SW. is ON position (Fuel level should indicate)	NG	Gauge malfunction	Replace the fuel gauge
OK			
Continuity between connectors 11 B-23 and 1 F-1	NG	Open circuit or poor connector contact	Repair open circuit or connector contact

2. Fuel gauge gives incorrect readings in all ranges

Tank unit resistance position with the float at checking points (Specified resistance should indicate)	NG	Tank unit malfunction	Replace the tank unit

WARNING AND INCIDATOR LIGHT

1. When the parking brake lever is pulled, the indicator light does not light up

Checkpoint		Trouble Cause	Countermeasure
Brake indicator light bulb continuity	NG	Bulb burned out or loose contact	Replace or reinstall the bulb
OK			
Parking brake SW. installation position and function	NG	Incorrect SW. adjustment or poor SW. point contact	Adjust or replace the parking brake SW.
OK			
Continuity between the parking brake SW. connector 1 C-39 (4x4: 1 R-4) and 12 B-23	NG	Open circuit or poor connector contact	Repair open circuit or connector contact
OK			
Continuity between the parking brake SW. connector 1 C-39 (4x4: 1 R-4) and the ground when the parking brake is operated	NG	Parking brake SW. malfunction	Replace the parking brake SW.

2. Even when the parking brake lever is pulled, the indicator light does not go off

Checkpoint		Trouble Cause	Countermeasure
Parking brake SW. installation position and function	NG	Incorrect the parking brake SW. adjustment or brake SW. faulty	Adjust the SW. installation position or replace the parking brake SW.
OK			
Check to see if the indicator light goes off when the parking brake SW. connector 1 C-39 (4x4: 1 R-4) is disconnected	NG	Brake fluid level SW. or vacuum SW. faulty or short circuit	Replace the brake fluid level SW., or vacuum SW., or repair a short circuit between the parking brake SW. connector 1 C-39 (4x4: 1 R-4) and 12 B-23 or the brake fluid level SW. connector 3 C-37 and 12 B-23 , or the vacuum SW. connector 1 C-38 and 12 B-23

3. Oil pressure warning light does not go off while engine is running

Engine oil pressure	NG	Refer to ENGINE Section	Refer to ENGINE Section
OK			
Check to see if the warning light goes off when the oil pressure SW. connector 1 P-11 (Diesel engine: 1 E- 1) is disconnected	NG	Short circuit	Repair a short circuit between 1 P-11 and 10 B-23 (Diesel engine: 1 E-1 and 10 B-23)
OK			
Continuity between the oil pressure SW. connector 1 P-11 (Diesel engine: 1 E-1) and the body ground when the engine is operating	NG	Oil pressure unit (or oil pressure SW) faulty	Replace the oil pressure unit (or the oil pressure SW.)

4. Even when the fuel filter is filled with water, the warning light does not light up

Checkpoint		Trouble Cause	Countermeasure
Sedimenter warning light bulb continuity	NG	Bulb burned out or loose contact	Replace or reinstall the bulb
OK			
Fuel filter SW. function	NG	SW. malfunction	Replace the fuel filter SW.
OK			
Continuity between the fuel filter SW. harness side connector 1 C-51 and 9 B-24 or 1 C-52 and C-36	NG	Open circuit or poor connector contact	Repair open circuit or connector contact

5. Even when the fuel filter is empty, the warning light does not go off

Check to see if the warning light goes off when the fuel filter SW. connectors C-51 and C-52 are disconnected	NG	Short circuit	Repair a short circuit between 1 C-51 and 9 B-24
OK			
Fuel filter SW. function	NG	SW. malfunction	Replace the fuel filter SW.

REMOVAL AND INSTALLATION

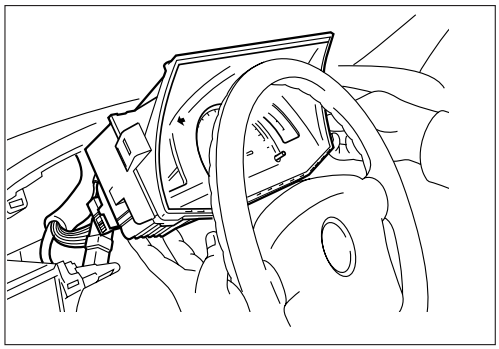
826RV017

METER ASSEMBLY

Removal

1. **Instrument Panel Driver Lower Cover**
   - Refer to the removal steps of “INSTRUMENT PANEL” in Section 10 “CAB”.
2. **Lower Cluster Assembly**
   - Refer to the removal steps of “INSTRUMENT PANEL” in Section 10 “CAB”.
3. **Instrument Panel Cluster Assembly**
   - Refer to the removal steps of “INSTRUMENT PANEL” in Section 10 “CAB”
4. **Meter Assembly**
   - Remove four screws of the meter assembly.
   - Disconnect the meter connectors.

Installation

Follow the removal procedure in the reverse order to install the meter.

Pay close attention to the important points mentioned in the following paragraphs.

Connector

Be absolutely sure that the meter connectors are securely connected.

This will prevent a poor contact and an open circuit.

Wire Harness

Do not pinch the wire harness between the cluster and the meter hood during the meter assembly installation procedure.

Wire damage will result.

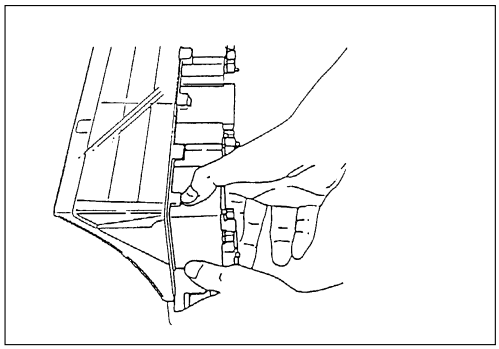

825RV062

METERS AND GAUGES

Removal

1. **Meter Assembly**
   - Refer to "METER ASSEMBLY" removal steps in this system.
2. **Meter Glass**
3. **Meter Needless**
   - Pull out the needles of speedometer and tachometer
4. **Meter Board**
   - Loosen four fixing screws.
5. **Meters and Gauges**

Installation

To Install, follow the removal steps in the reverse order.

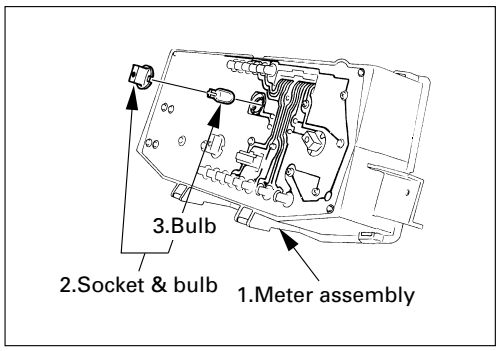

825RV063

WARNING LIGHT BULB, INDICATOR LIGHT BULB AND ILLUMINATION LIGHT BULB

Removal

Turn the bulb socket counterclockwise and pull the bulb out.

Installation

To Install, follow the removal steps in the reverse order.

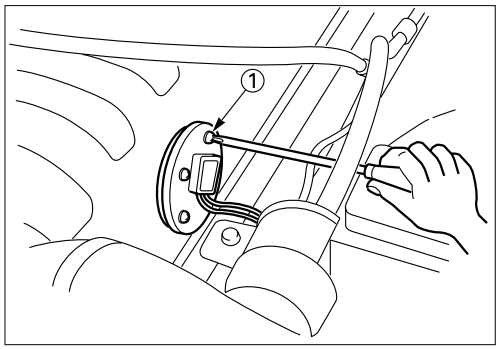

140RV008

FUEL TANK UNIT

Removal

1. Disconnect the fuel tank unit connector.
2. Loosen the screws ①.

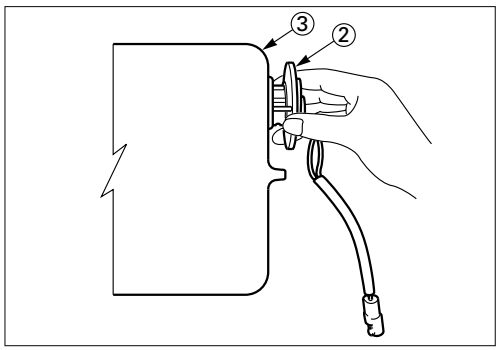

140RV009

3. Remove the fuel tank unit ② from the fuel tank ③.

Installation

Follow the removal procedure in the reverse order to install the fuel tank unit.

Pay close attention to the important points mentioned in the following paragraphs.

Rubber Seal

Be absolutely sure that the fuel tank unit rubber seal is correctly seated.

Connector

Be absolutely sure that the fuel tank unit connector is securely connected.

This will prevent a poor contact and an open circuit.

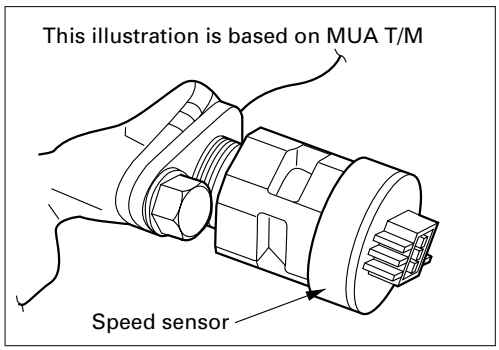

826RV043

VEHICLE SPEED SENSOR (INSTALLED ON THE TRANSMISSION)

Removal

1. Disconnect the connector.
2. Remove the vehicle speed sensor body by rotating it.

Installation

To Install, follow the removal steps in the reverse order, noting the following point.

Tighten the vehicle speed sensor to the specified torque.

Vehicle Speed Sensor Tightening Torque kg·m (lb·ft/N·m)
2.5 ± 0.5 (18 ± 3.6 / 25 ± 4.9)

INSPECTION AND REPAIR

Warning, indicator and illumination light position
W/O Tachometer (Gasoline engine)

(This illustration is based on the Km/h meter)

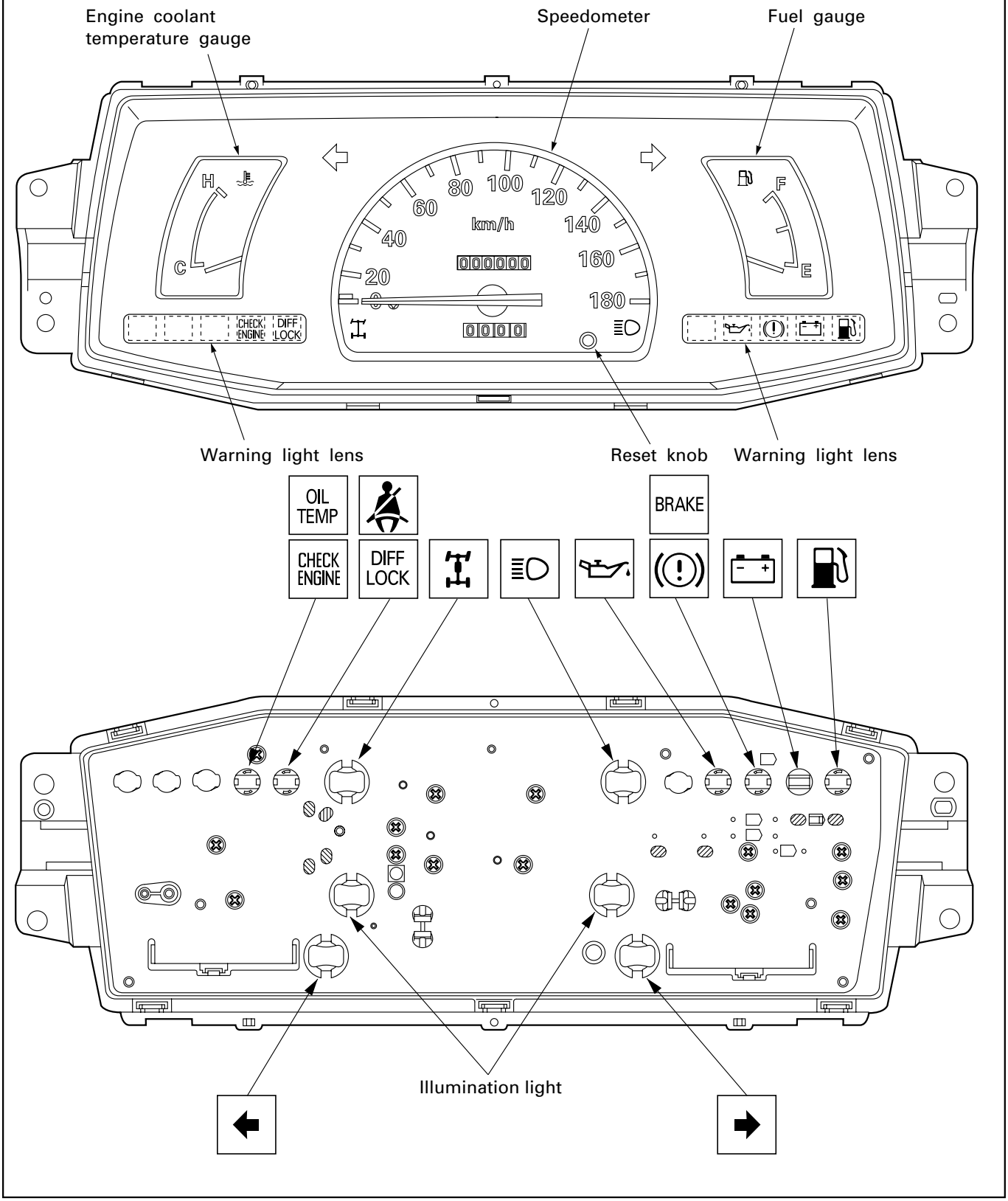

826RV035

W/O Tachometer (Diesel engine)

(This illustration is based on the Km/h meter)

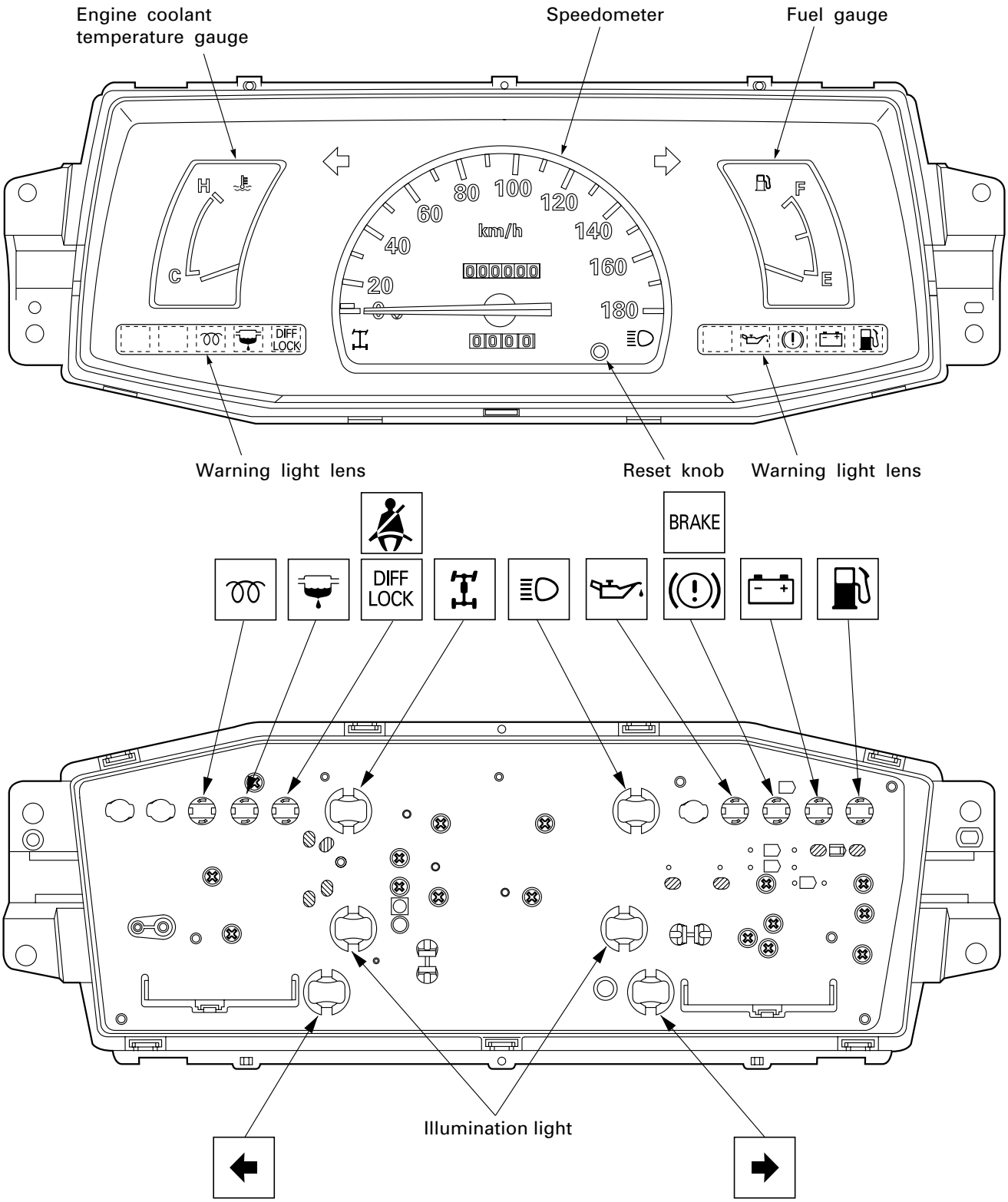

826RV036

W/ Tachometer (Gasoline engine)

(This illustration is based on the Km/h meter)

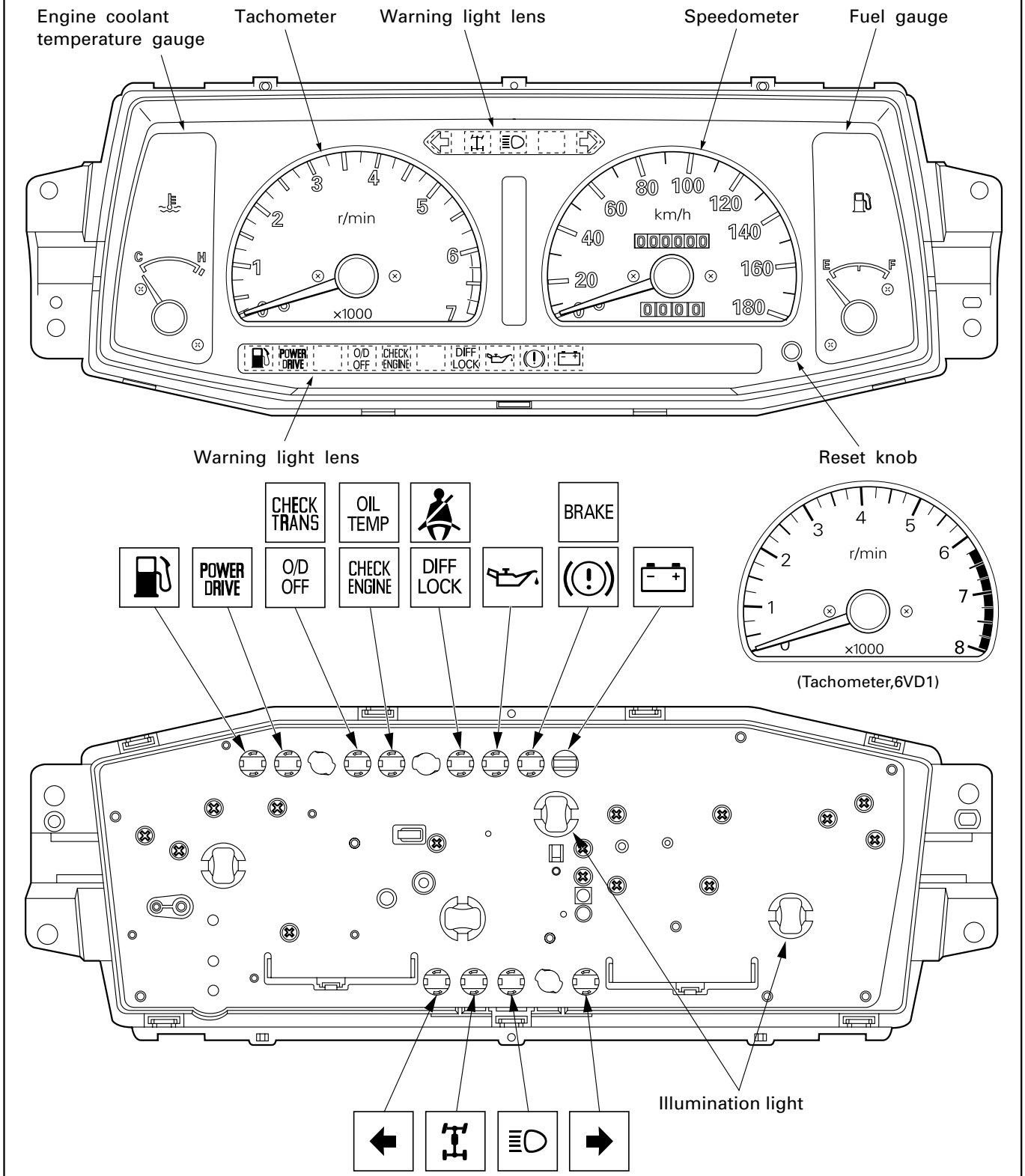

D08RW556

W/ Tachometer (Diesel engine)

(This illustration is based on the Km/h meter)

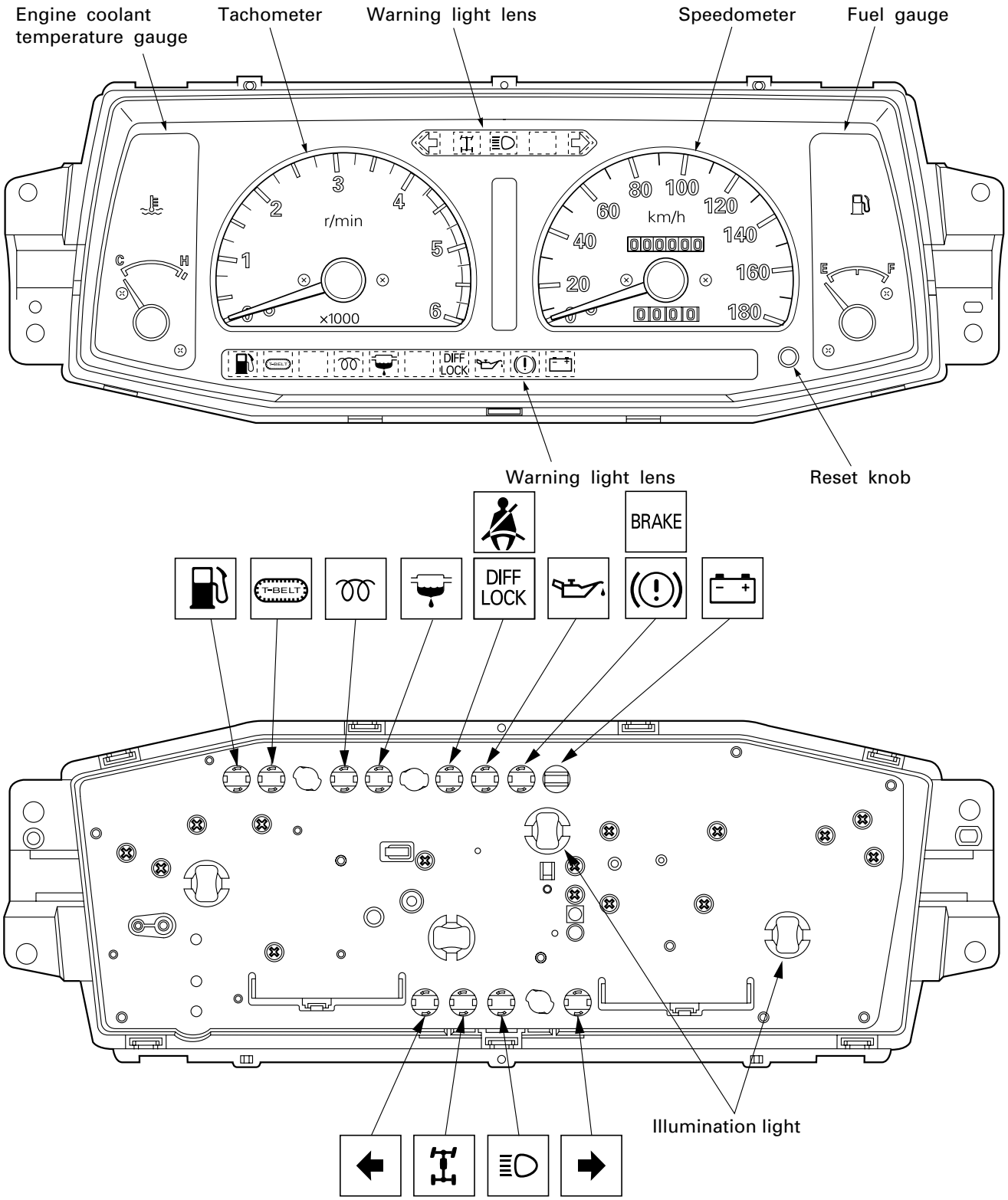

826RV032

Meter connector pin arrangement
W/O Tachometer (Gasoline engine)

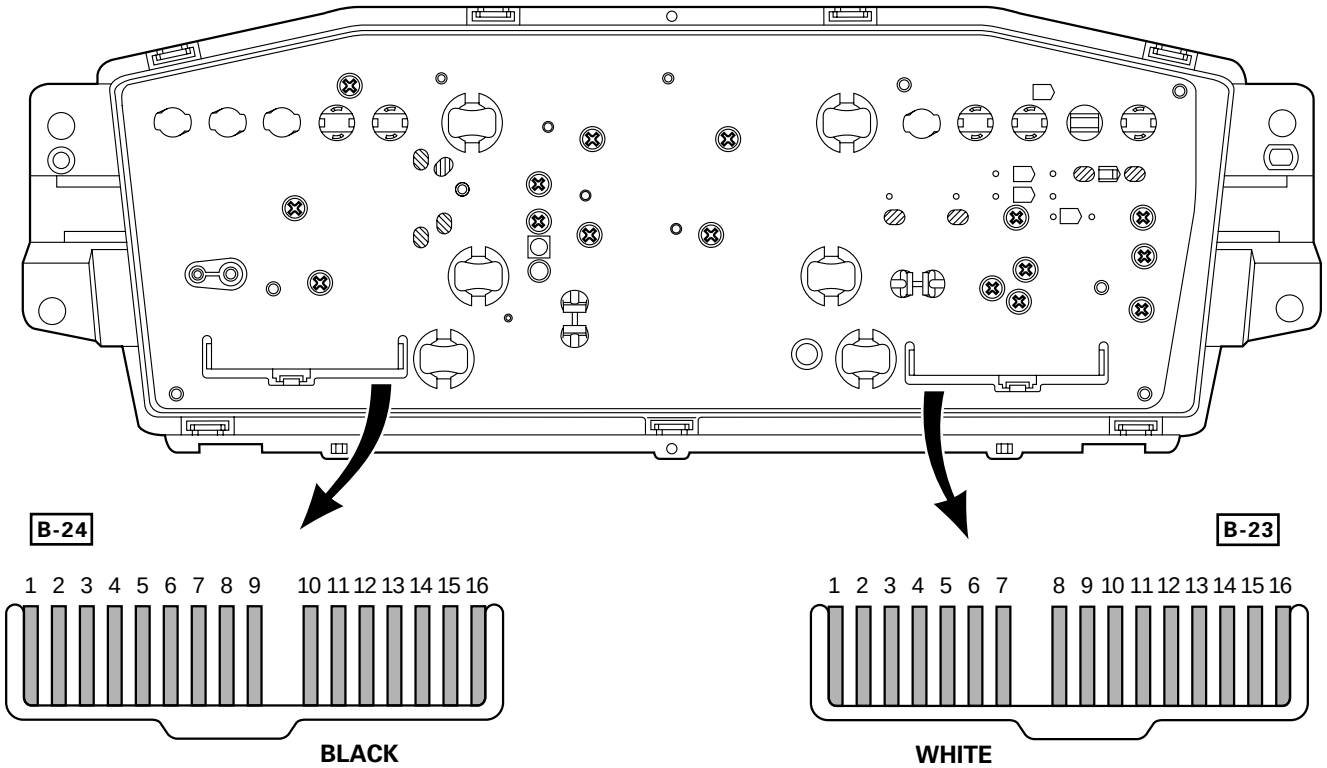

Connector No. / Terminal No.	B-24
1	Ground
2	Ignition
3	—
4	—
5	—
6	Engine coolant temperature gauge
7	—
8	—
9	Oil temp. warning light (Saudi Arabia only) Check engine warning light
10	Seat belt warning light (Saudi Arabia only) Diff. lock indicator light (South Africa only)
11	High-beam indicator light (+)
12	High-beam indicator light (–)
13	Illumination light (+)
14	Illumination light (–)
15	4WD indicator light
16	Turn signal indicator light (left)

Connector No. / Terminal No.	B-23
1	Turn signal indicator light (right)
2	—
3	—
4	—
5	Ground
6	—
7	Ignition
8	Speedometer
9	Speedometer
10	Oil pressure warning light
11	Fuel gauge
12	Brake warning light
13	Charge warning light
14	—
15	—
16	Fuel warning light

Meter connector pin arrangement
W/O Tachometer (Diesel engine)

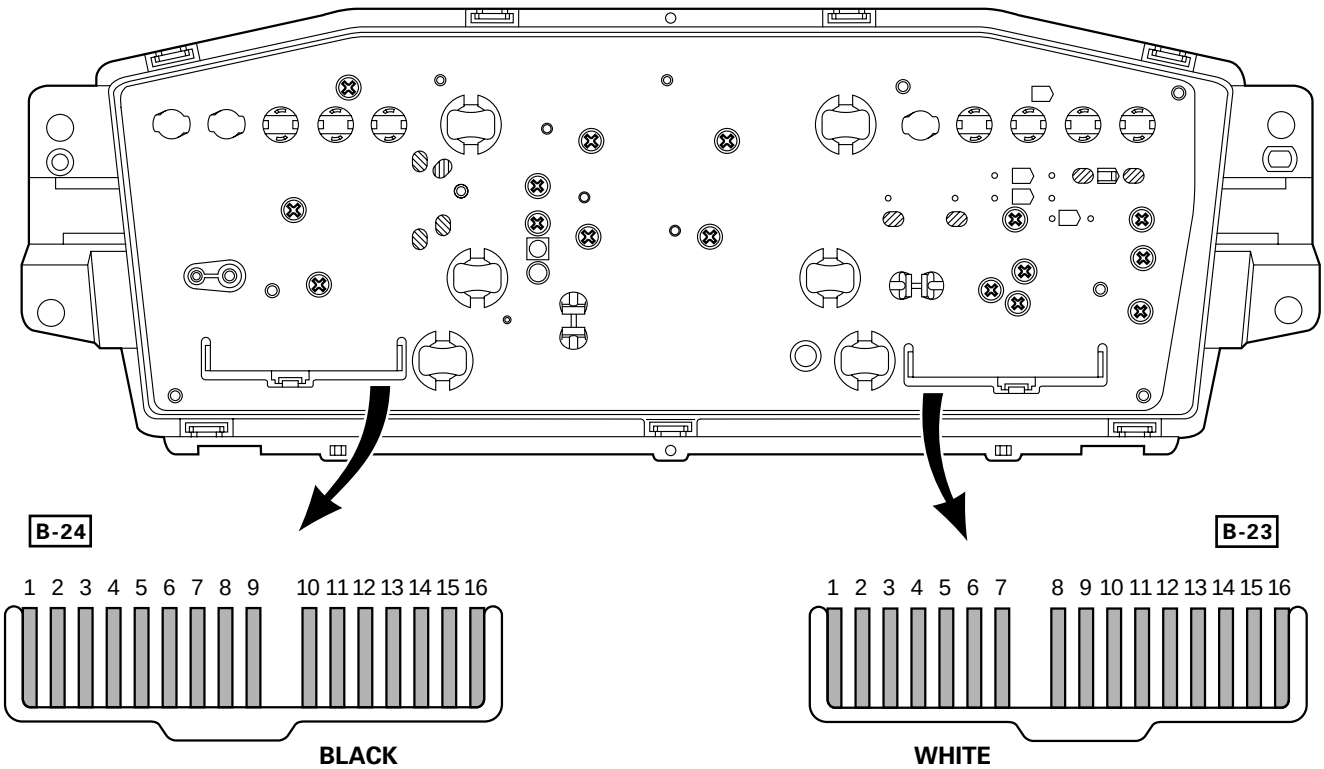

Connector No. / Terminal No.	B-24
1	Ground
2	Ignition
3	—
4	—
5	—
6	Engine coolant temperature gauge
7	—
8	Glow indicator light
9	Sedimenter warning light
10	Seat belt warning light (Saudi Arabia only) Diff. lock indicator light (South Africa only)
11	High-beam indicator light (+)
12	High-beam indicator light (–)
13	Illumination light (+)
14	Illumination light (–)
15	4WD indicator light
16	Turn signal indicator light (left)

Connector No. / Terminal No.	B-23
1	Turn signal indicator light (right)
2	—
3	—
4	—
5	Ground
6	—
7	Ignition
8	Speedometer
9	Speedometer
10	Oil pressure warning light
11	Fuel gauge
12	Brake warning light
13	Charge warning light
14	—
15	—
16	Fuel warning light

Meter connector pin arrangement
W/ Tachometer (Gasoline engine)

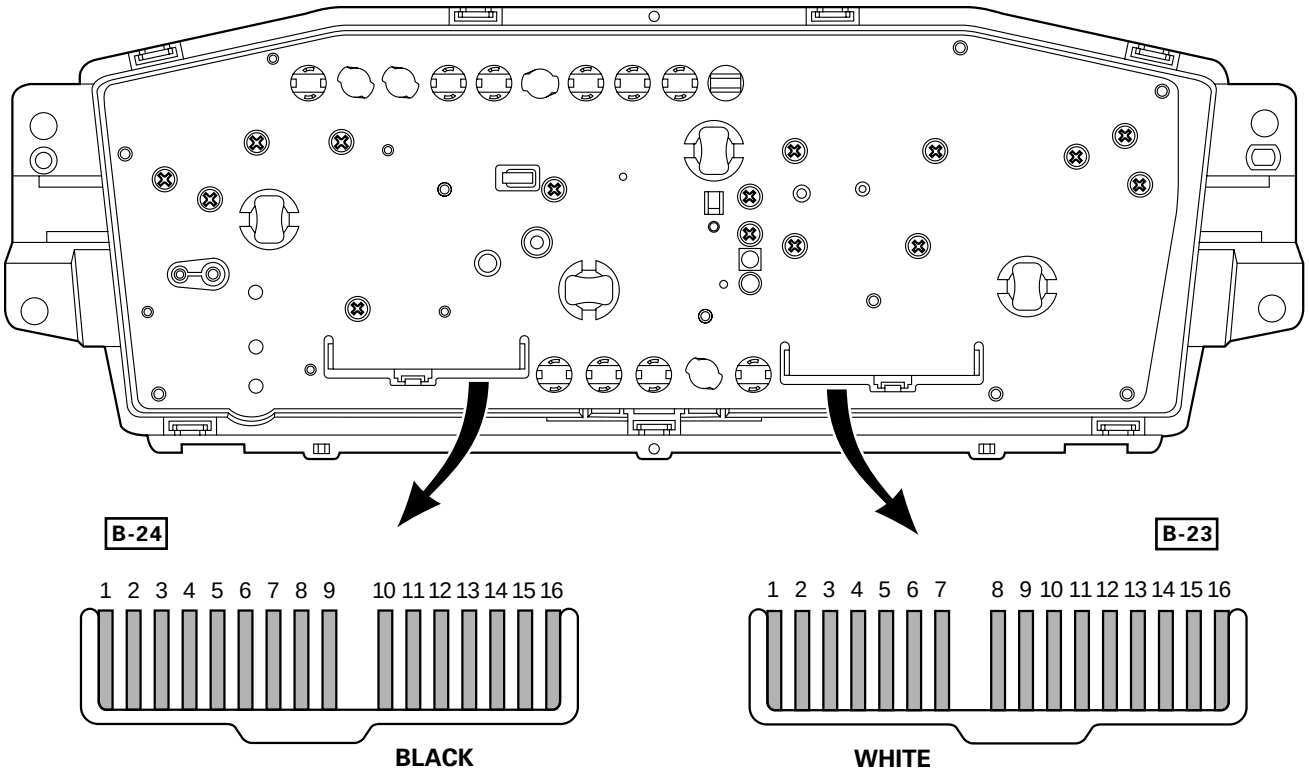

826RV033

Connector No. / Terminal No.	B-24
1	Ground
2	Ignition
3	Tachometer
4	—
5	—
6	Engine coolant temperature gauge
7	—
8	O/D off indicator light (Australia: A/T) Check trans warning light (6VD1 A/T)
9	Oil temp. warning light (Saudi Arabia only) Check engine warning light
10	Seat belt warning light (Saudi Arabia only) Diff. lock indicator light (South Africa only)
11	—
12	—
13	Illumination light (+)
14	Illumination light (–)
15	4WD indicator light
16	Turn signal indicator light (left)

Connector No. / Terminal No.	B-23
1	Turn signal indicator light (right)
2	—
3	High-beam indicator light (+)
4	High-beam indicator light (–)
5	Ground
6	Power drive indicator (6VD1 A/T)
7	—
8	Speedometer
9	Speedometer
10	Oil pressure warning light
11	Fuel gauge
12	Brake warning light
13	Charge warning light
14	Illumination light (+)
15	Illumination light (–)
16	Fuel warning light

Meter connector pin arrangement
W/ Tachometer (Diesel engine)

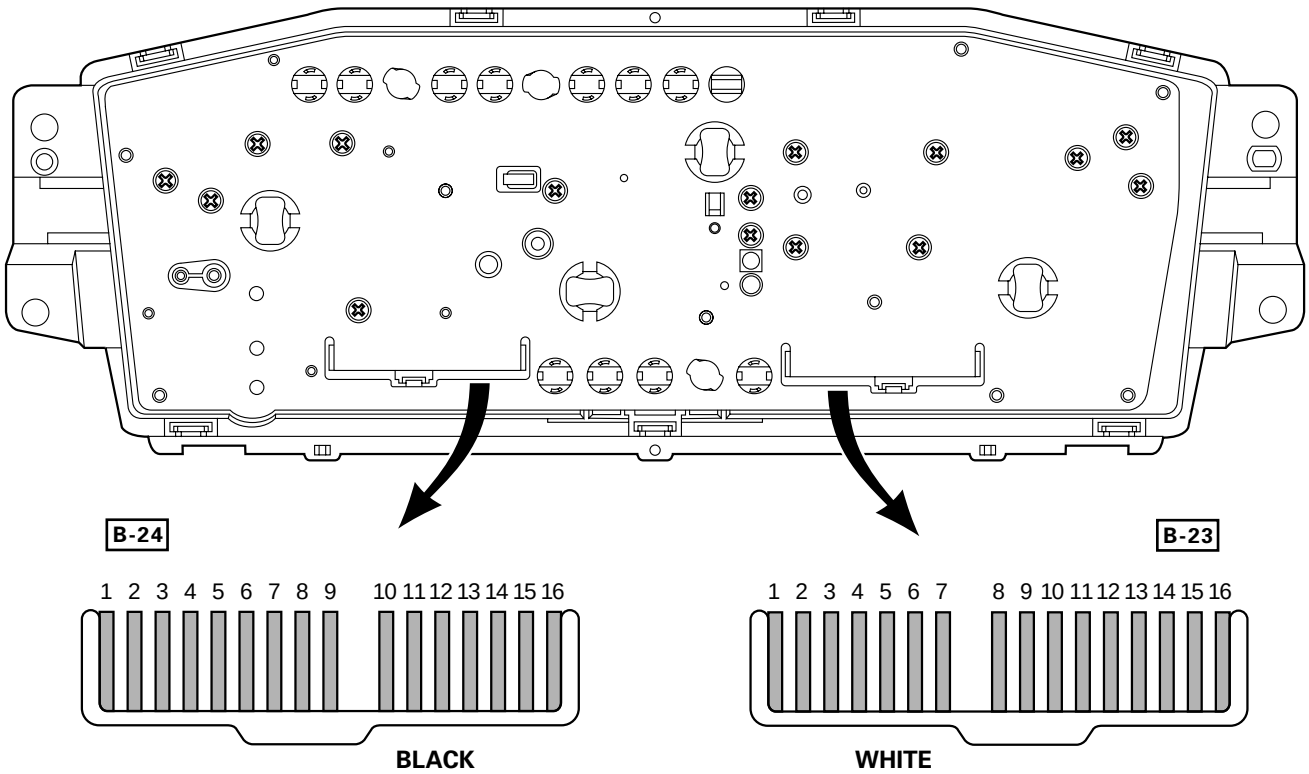

826RV034

Connector No. / Terminal No.	B-24
1	Ground
2	Ignition
3	Tachometer
4	—
5	—
6	Engine coolant temperature gauge
7	—
8	Glow indicator light
9	Sedimenter warning light
10	Seat belt warning light (Saudi Arabia only) Diff. lock indicator light (South Africa only)
11	—
12	—
13	Illumination light (+)
14	Illumination light (–)
15	4WD indicator light
16	Turn signal indicator light (left)

Connector No. / Terminal No.	B-23
1	Turn signal indicator light (right)
2	—
3	High-beam indicator light (+)
4	High-beam indicator light (–)
5	Ground
6	—
7	—
8	Speedometer
9	Speedometer
10	Oil pressure warning light
11	Fuel gauge
12	Brake warning light
13	Charge warning light
14	Illumination light (+)
15	Illumination light (–)
16	Fuel warning light

SPEEDOMETER AND TACHOMETER

Speedometer On-Vehicle Inspection

Check the speedometer accuracy with a speedometer tester.

Carefully follow the tester manufacturer's instructions.

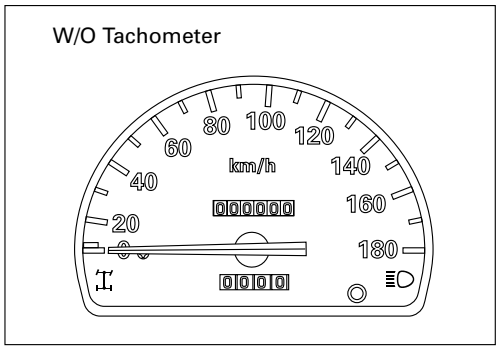

826RV027

km/h meter (Except Saudi Arabia, South Africa) km/h

Indication	Permissible Range
20	17.2–22.8
40	37.2–42.8
60	57.2–62.8
80	77.2–82.8
100	97.3–103.7
120	117.3–123.7
140	137.3–143.7
160	156.9–164.1

km/h meter (Saudi Arabia, South Africa) km/h

Indication	Permissible Range
20	20–25.6
40	40–45.6
60	60–65.6
80	80–85.6
100	99.5–105.9
120	119.5–125.9
140	139.5–145.9
160	159.1–166.3

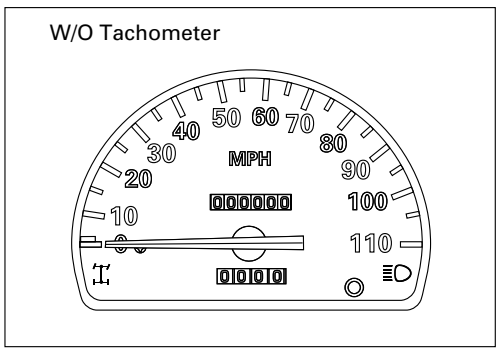

826RV039

MPH meter MPH

Indication	Permissible Range
20	18.2–21.8
40	38.2–41.8
60	58.2–61.8
80	78.8–82.8
100	98.5–103.1

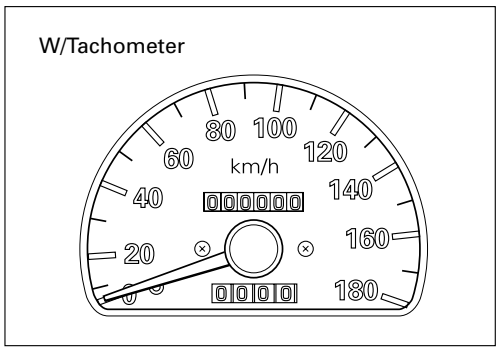

826RV026

km/h meter (Except Saudi Arabia, South Africa) km/h

Indication	Permissible Range
20	17.5–22.5
40	37.5–42.5
60	57.5–62.5
80	77.5–82.5
100	97.6–103.4
120	117.6–123.4
140	137.6–143.4
160	157.2–163.8

km/h meter (Saudi Arabia, South Africa) km/h

Indication	Permissible Range
20	20–25
40	40–45
60	60–65
80	80–85
100	99.8–105.6
120	119.8–125.6
140	139.8–145.6
160	159.4–166

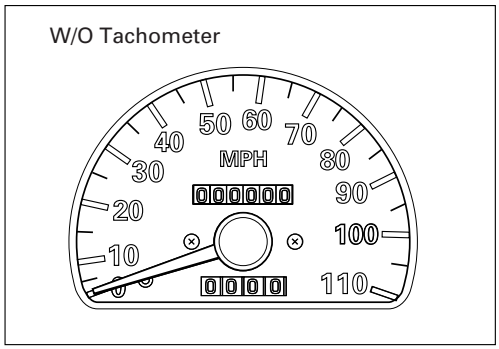

826RV040

MPH meter MPH

Indication	Permissible Range
20	18.5–21.5
40	38.5–41.5
60	58.5–61.5
80	79.1–82.5
100	98.9–102.7

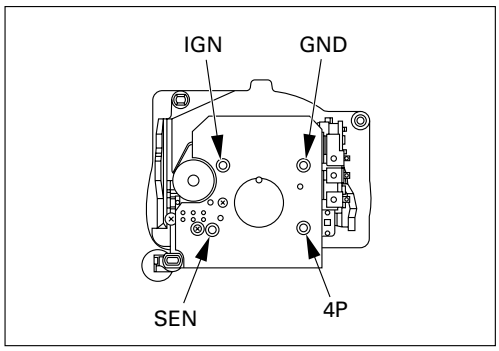

825RV064

Speedometer Off-Vehicle Inspection

Remove the speedometer from the meter assembly and measure the resistance and the current consumption between each terminal.

Speedometer Resistance

Terminal symbol \ Tester terminal	Red (+)	Black (–)	Black (–)	Red (+)
IGN – GND	IGN	GND	IGN	GND
	∞		30.6 – 37.4k	
SEN – GND	SEN	GND	SEN	GND
	28.8 – 35.2k		∞	
4P – GND	4P	GND	4P	GND
	13.5 – 16.5k		∞	

Note: Use the analog type circuit tester (range: x 1k).

Speedometer Current Consumption

Terminal symbol	Current consumption	Remarks
IGN – GND ⊕ ⊖	85 ± 15 mA (when 12 ± 1V applied)	No signal input

Note: 1. Use the analog type circuit tester.
2. Since the current consumption fluctuates when the source voltage varies, check to be sure that the voltage applied is 12V ± 1V.

Tachometer On-Vehicle Inspection

1. Attach a tune-up tester to the engine.
2. Start the engine.

3. Compare the tachometer reading and the tester reading.

   If the tachometer indication is outside the permissible range, the tachometer must be replaced.
4. Gradually increase and decrease the engine speed.

   Note the movement of the tachometer needle.

   If the needle movement is sluggish, the tachometer must be replaced.

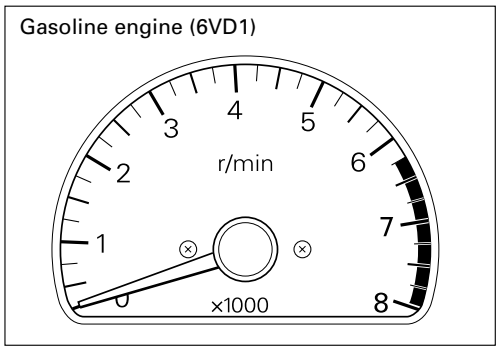

825RW256

Gasoline engine (6VD1) rpm

Indication	Permissible Range
1,000	900–1060
2,000	1820–2070
3,000	2820–3120
4,000	3820–4180
5,000	4820–5180
6,000	5820–6180
7,000	6820–7180

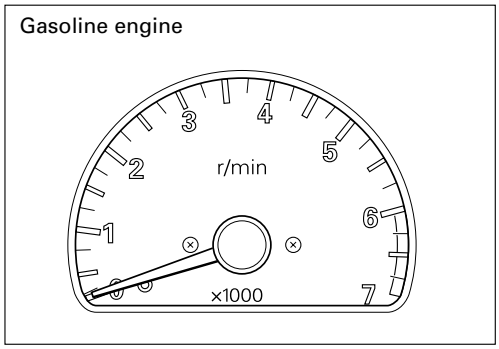

821RV121

Gasoline engine rpm

Indication	Permissible Range
1,000	940–1060
2,000	1875–2125
3,000	2850–3150
4,000	3820–4180
5,000	4820–5180
6,000	5820–6180

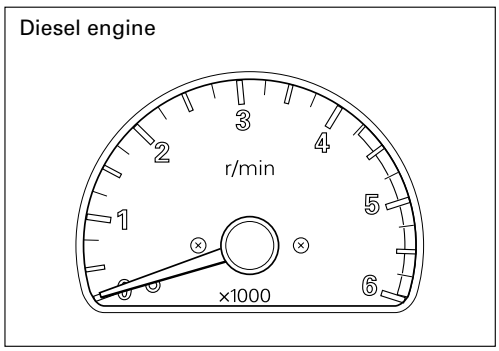

821RV118

Diesel engine rpm

Indication	Permissible Range
750	690–810
2,000	1875–2125
3,000	2850–3150
4,000	3820–4180
5,000	4820–5180

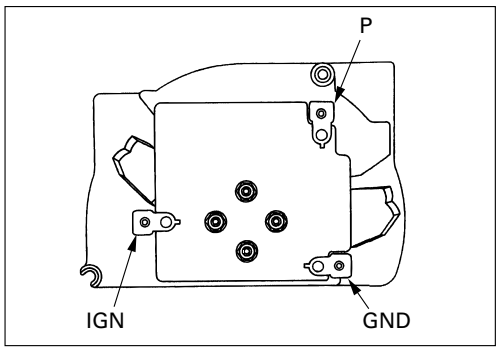

821RV117

Tachometer Off-Vehicle Inspection

Remove the tachometer from the meter assembly and measure the resistance value and the current consumption between each terminal.

Tachometer Resistance

Tester terminal / Terminal symbol	Red (+)	Black (–)	Black (–)	Red (+)
IGN – GND	IGN	GND	IGN	GND
	∞		23 – 31k	
P – GND	P	GND	P	GND
	∞		24.7 – 33.4k	

Note: Use the analog type circuit tester (range: x 1k).

Tachometer Current Consumption

Terminal symbol	Current consumption	Remarks
IGN – GND ⊕ ⊖	90 ± 15 mA (12 ± 1V when voltage applied)	No signal input

Note:
1. Use the analog type circuit tester.
2. Since the current consumption fluctuates as the source voltage varies, check to be sure that the voltage applied is 12V ± 1V.

TEMPERATURE GAUGE AND THERMO UNIT

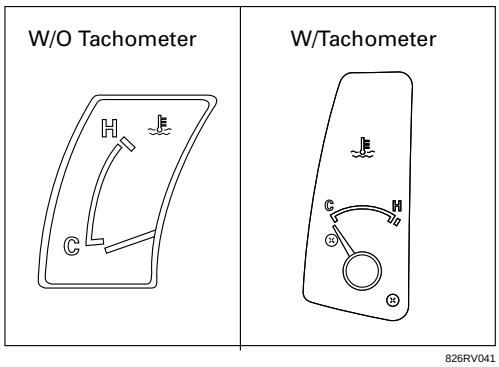

826RV041

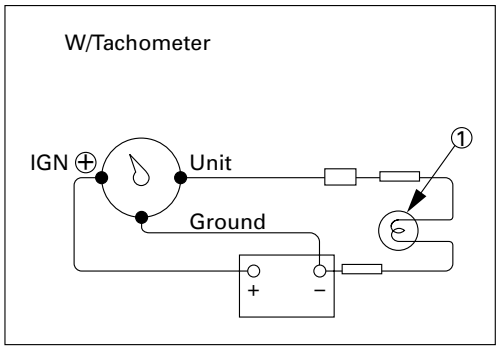

140RV006

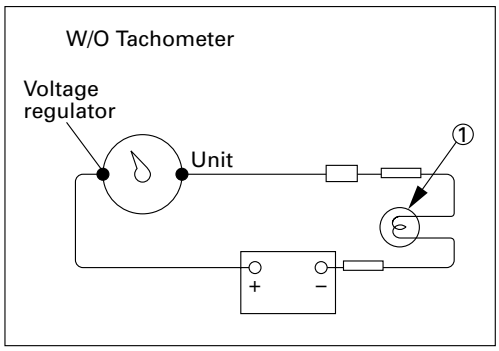

140RV005

Temperature Gauge On-Vehicle Inspection

1. Disconnect the temperature gauge wire connector.
2. Connect a 3.4 Watt test bulb ① to the ground.

   The gauge needle should move the middle part of the gauge

Temperature Gauge Off-Vehicle Inspection

Use a circuit tester to measure the temperature gauge resistance.

Temperature Gauge Resistance Ω

Measuring Point	Standard	
	With Tachometer	Without Tachometer
IGN (+) – Ground	130	–
IGN (+) – UNIT	82	–
UNIT – Ground	212	–
VOLTAGE REGULATOR – UNIT	–	25

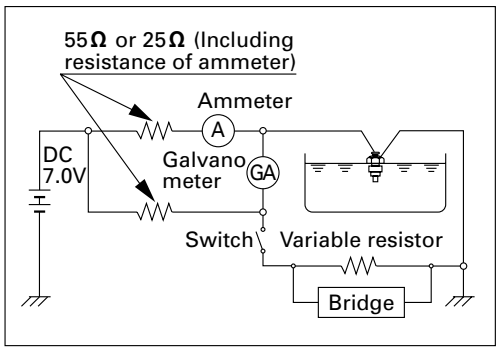

825RV112

Thermo Unit Inspection

The thermo unit is thermistor type and must be inspected under the conditions as shown in the left chart.

1. Put the deviation of the galvanometer to 0 by using the variable resistor, switch the thermo unit off and then measure the resistance of the resistor through the bridge.

   Confirm that the resistance is continuously variable in any other points than those shown in the following table.

2. Dip the thermo unit into 80 – 90°C (176 – 194°F) water and confirm that there is no bubble continuously coming out of inside of the unit.

   Replace the unit when the result of inspection is found abnormal.

Check condition \ Temperature		50°C (122°F)	115°C (239°F)
7V 55Ω Gauge	Resistance value (Ω)	$226.0^{+33.6}_{-36.6}$	$26.4^{+1.71}_{-2.21}$
7V 25Ω Gauge		—	$24.3^{+2.68}_{-3.68}$

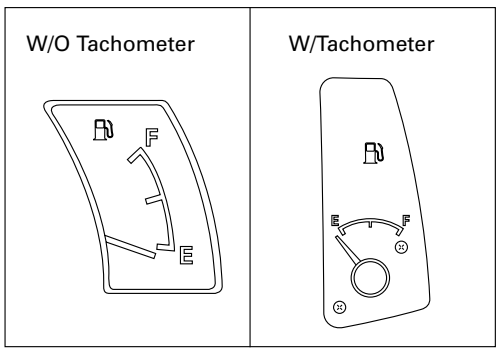

826RV042

FUEL GAUGE AND TANK UNIT

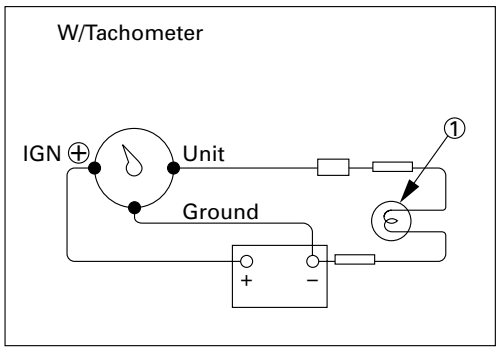

140RV006

Fuel Gauge On-Vehicle Inspection

1. Disconnect the fuel gauge wire connector.
2. Connect a 3.4 Watt test bulb ① to the ground.

   The gauge needle should more the middle part of the gauge.

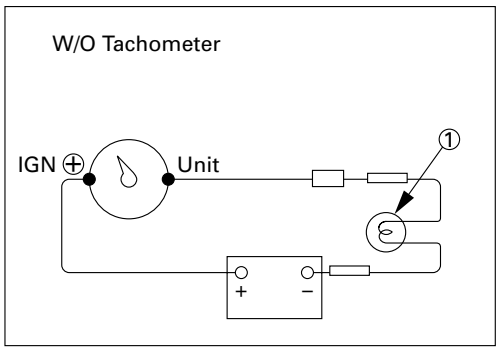

140RV007

Fuel Gauge Off-Vehicle Inspection

Use a circuit tester to measure the fuel gauge resistance.

Fuel Gauge Resistance Ω

Measuring Point	Standard	
	With Tachometer	Without Tachometer
IGN (+) – Ground	223	110
IGN (+) – 7V		(0)
IGN (+) – UNIT	83	25
Ground – 7V		110
Ground – UNIT	140	135
7V – UNIT		25

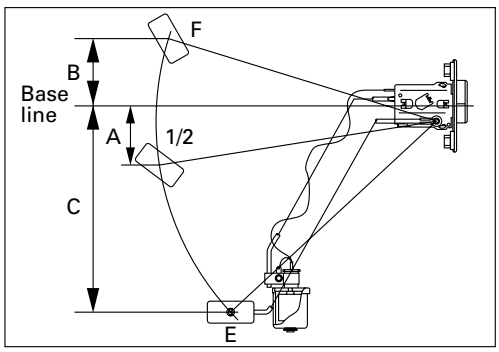

140RV003

Fuel Tank Unit Inspection

Measure the fuel tank unit resistance between the connector terminals 1 F-1 and 3 F-1 while shifting the float from "E" to "F" point.

Fuel Tank Resistance

Level	Float position mm	Standard resistance Ω
F (B)	51.7	17 ± 2.1
1/2 (A)	49.4	45 ± 4.5
E (C)	166.9	120 ± 6.5

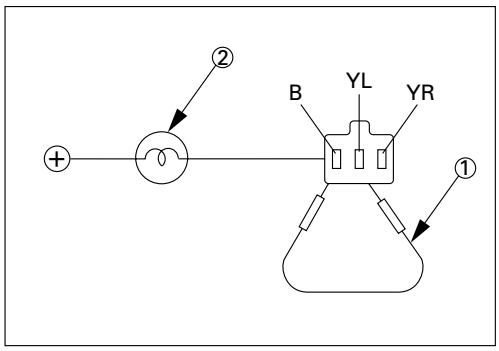

140RV004

Low Fuel Indicator Light Inspection

1. Disconnect the fuel tank unit wire connector.
2. Connect between terminal (YL) and (B).
3. Turn the key switch on. Check that the bulb lights.

If operation is not correct, remove and check the bulb or circuit.

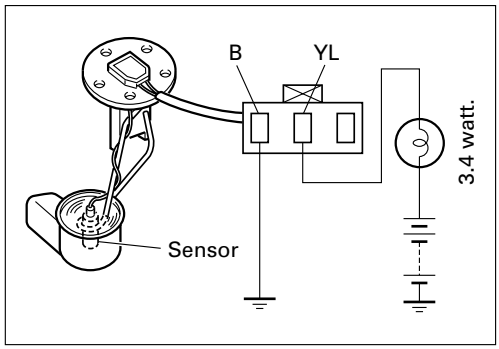

140RV010

Check level sensor operation

1. Remove the fuel tank unit.
2. Apply battery voltage between terminal (YL) and (B) through a 3.4 watt bulb. Check that the bulb lights.

Note:
It will take a short time for the bulb light.

3. Submerge the sensor in fuel. Check that the bulb goes out.

If operation is not correct, replace the fuel tank unit.

BRAKE SYSTEM WARNING LIGHT

The brake system warning light comes on while the parking brake is set and the starter key is ON position.

Note:
The parking brake indicator light circuit is designed to prevent driving of the vehicle with the parking brake on. It does not indicate the condition of the parking brake system.

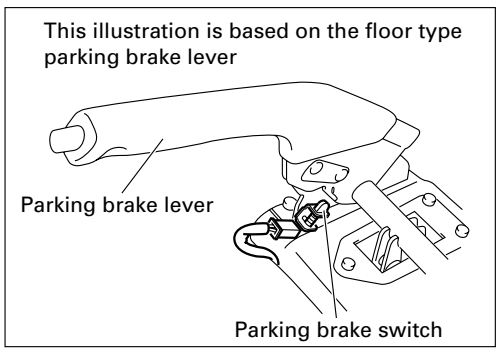

825RV066

The parking brake switch is in parallel with the brake fluid switch.

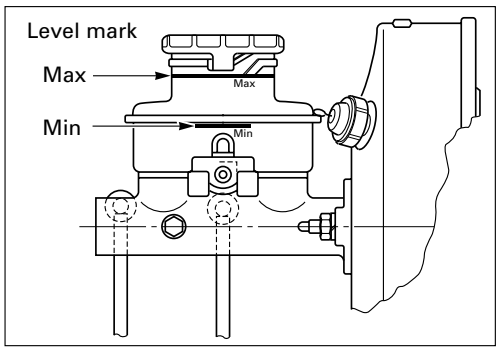

330RV001

The brake system warning light also comes on when reservoir brake fluid level falls below the specified limit with the parking brake released and the starter switch is ON position.

VEHICLE SPEED SENSOR (INCORPORATED IN THE SPEEDOMETER)

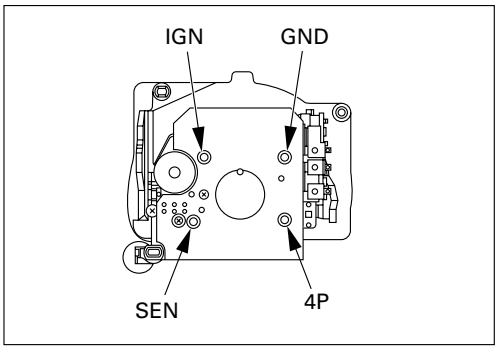

825RV064

Vehicle Speed Sensor Inspection

Remove the speedometer from the meter assembly and measure the resistance value between the terminals.

Speed Sensor Resistance

Tester terminal / Terminal symbol	Red (+)	Black (–)	Black (–)	Red (+)
4P – GND	4P	GND	4P	GND
	13.5 – 16.5k		∞	

Note: Use the analog type circuit tester.

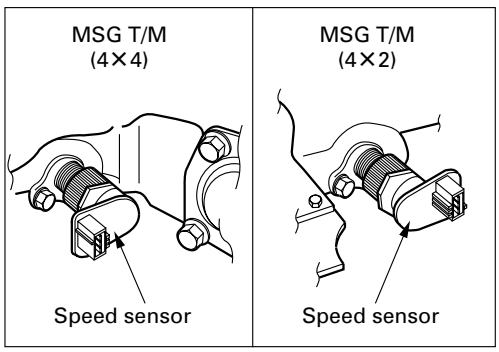

826RV018

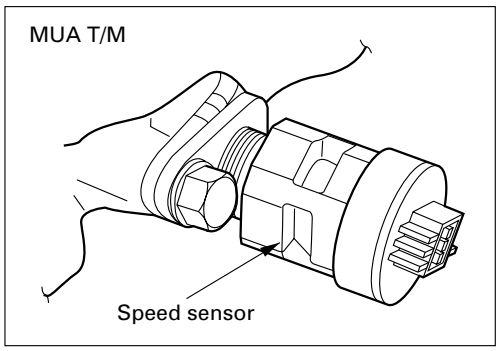

826RV044

VEHICLE SPEED SENSOR (INSTALLED ON THE TRANSMISSION)

The speed sensor is installed on the rear portion of the transmission.

The number of pulses generated is four pulses per one rotation of the pinion shaft.

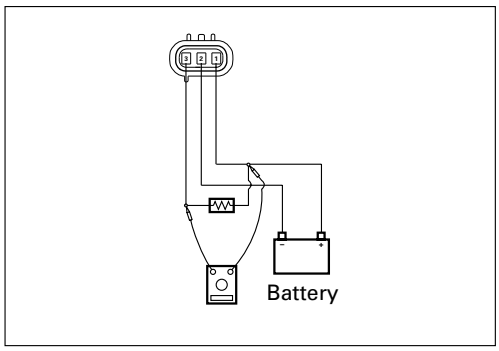

820RV001

Vehicle Speed Sensor Inspection

1. Connect the vehicle speed sensor connector 1 M-10 (Diesel engine: 1 E-44) to the battery (+) terminal and 2 M-10 (Diesel engine: 2 E-44) to the (–) terminal.
2. Connect a resistance of 1.3K ohm to 5K ohm (1/4 W or more) between connectors 1 M-10 (Diesel engine: 1 E-44) and 3 M-10 (Diesel engine: 3 E-44)

CAUTION:
Be extremely careful not to connect the battery (+) terminal to the connector 3 M-10 (Diesel engine: 3 E-44).

This may damage the vehicle speed sensor.

3. Rotate the shaft of the vehicle speed sensor slowly and measure the voltage at the both ends with a digital tester.

The voltage, with one rotation of shaft fluctuates four times in the following range: 10 to 14V — 2V or less.

Timing Belt Indicator Light Reset Procedure (4JA1-T Diesel Engine - RHD)

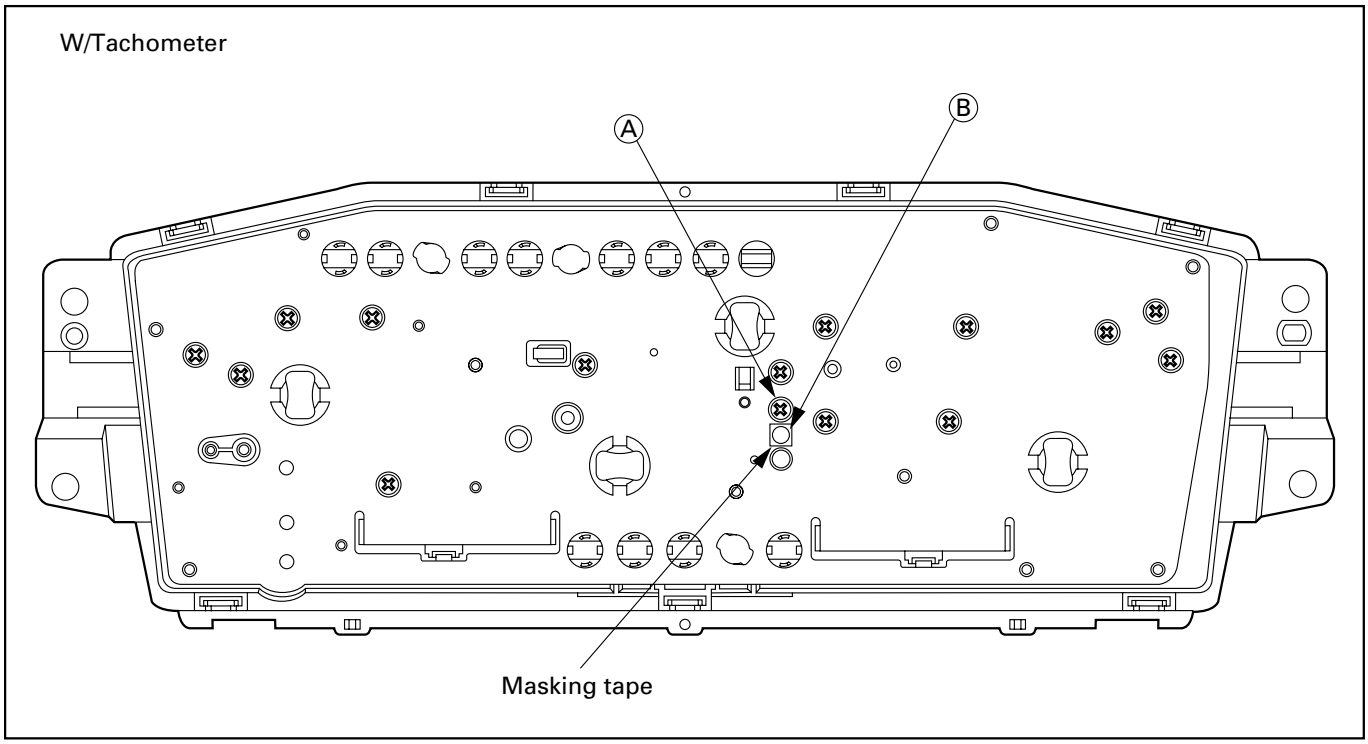

821RV120

Timing belt must be replaced after 100,000 km of vehicle operation.

When the odometer reading reaches 100,000 km, the timing belt indicator light will turn on to remind the driver to change the timing belt.

After replacing the timing belt, the timing belt indicator light must be reset to remind the driver to replace the timing belt after the next 100,000 km.

Timing Belt Indicator Light Reset Procedure

1. Remove the masking tape from the hole Ⓑ.
2. Remove the screw from the hole Ⓐ and install it to the hole Ⓑ.
3. Apply new masking tape to the hole Ⓐ.

Note:

The above procedure assumes that the timing belt is being replaced for the first time (after 100,000 km).

For subsequent reset procedure (at next 100,000 km), hole positions will be the opposite of the above procedure.

HEATER AND AIR CONDITIONING

PARTS LOCATION (LHD)

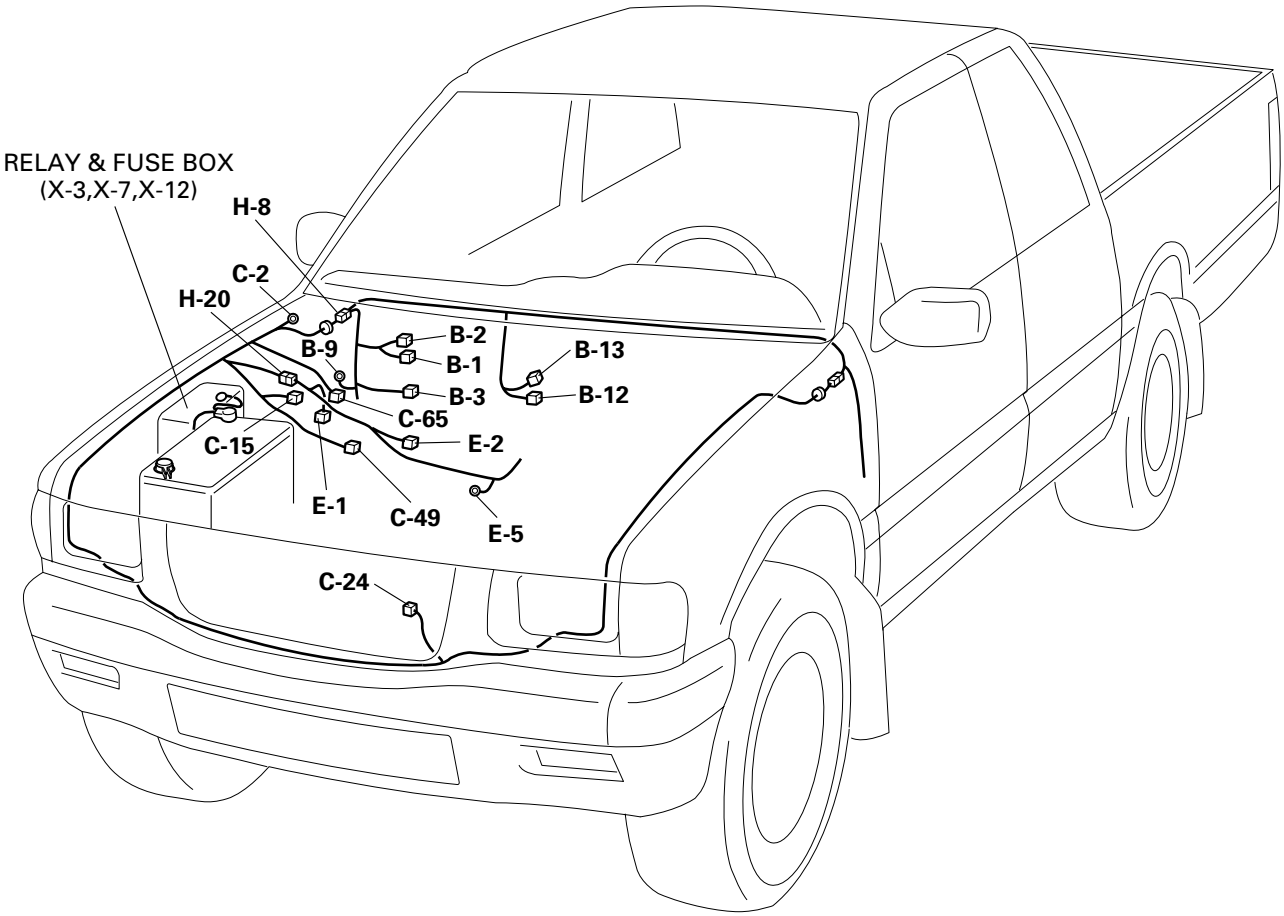

D08RVA45

PARTS LOCATION (6VD1 – LHD)

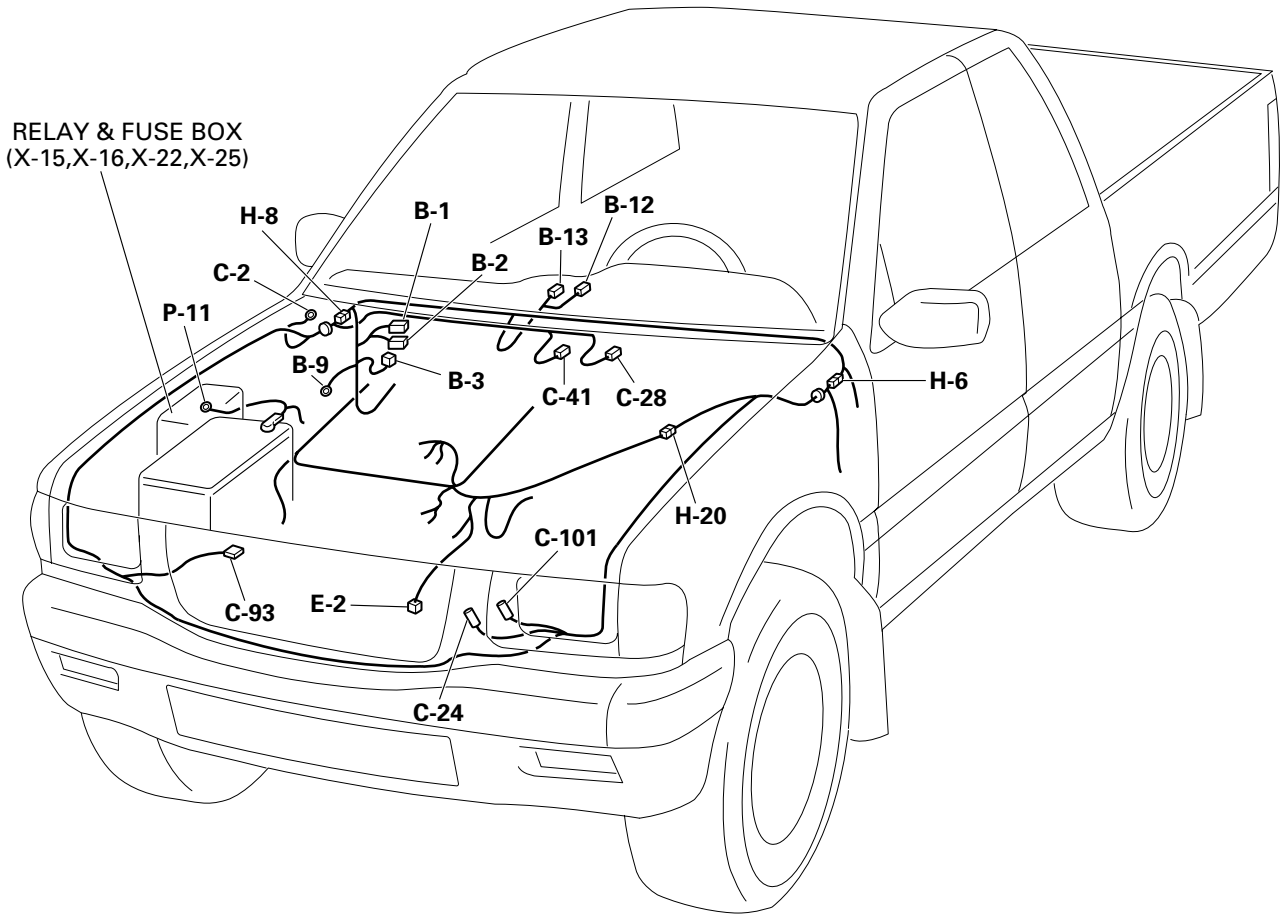

D08RW549

PARTS LOCATION (RHD)

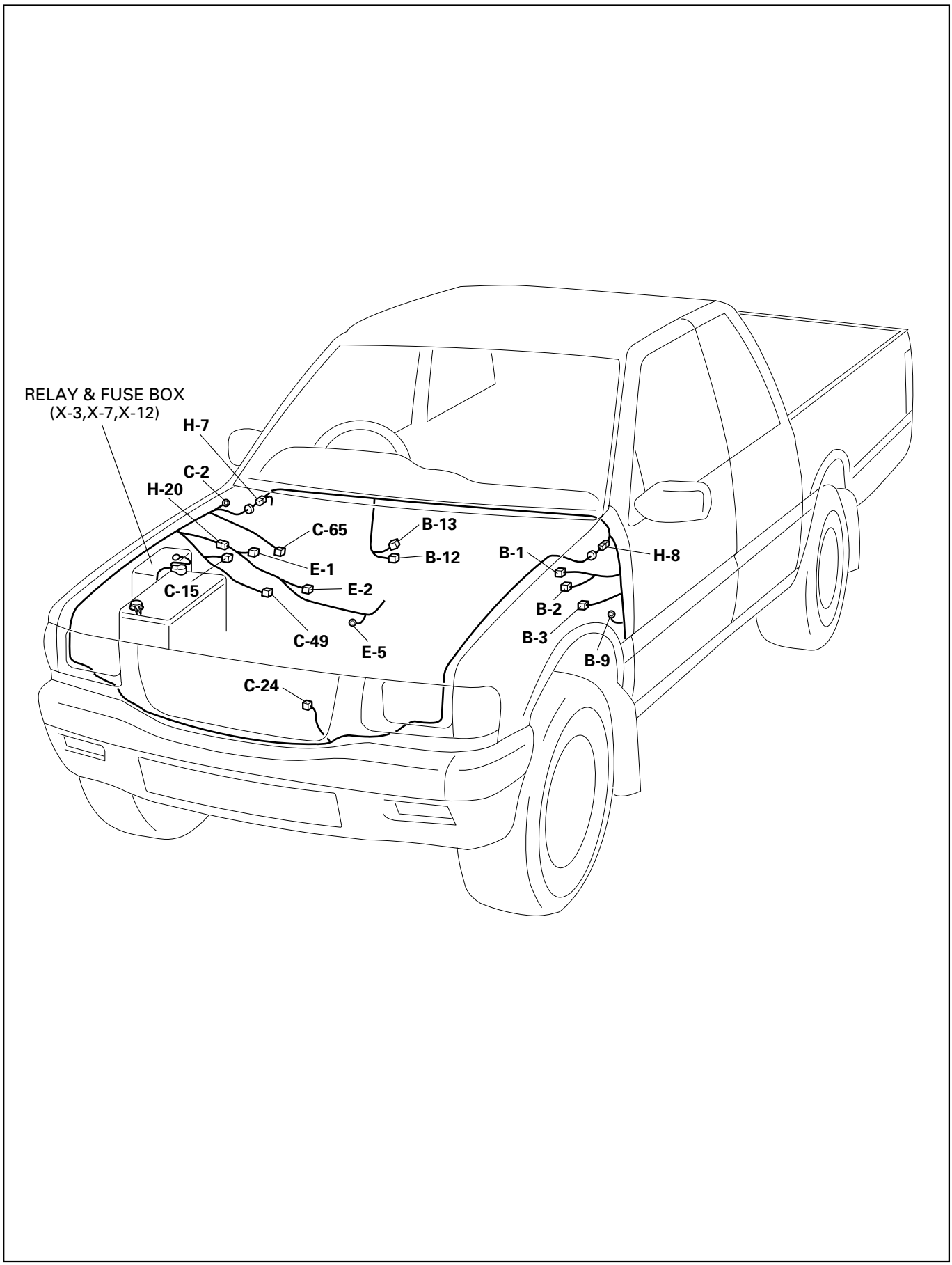

D08RVA48

PARTS LOCATION (6VE1 – RHD)

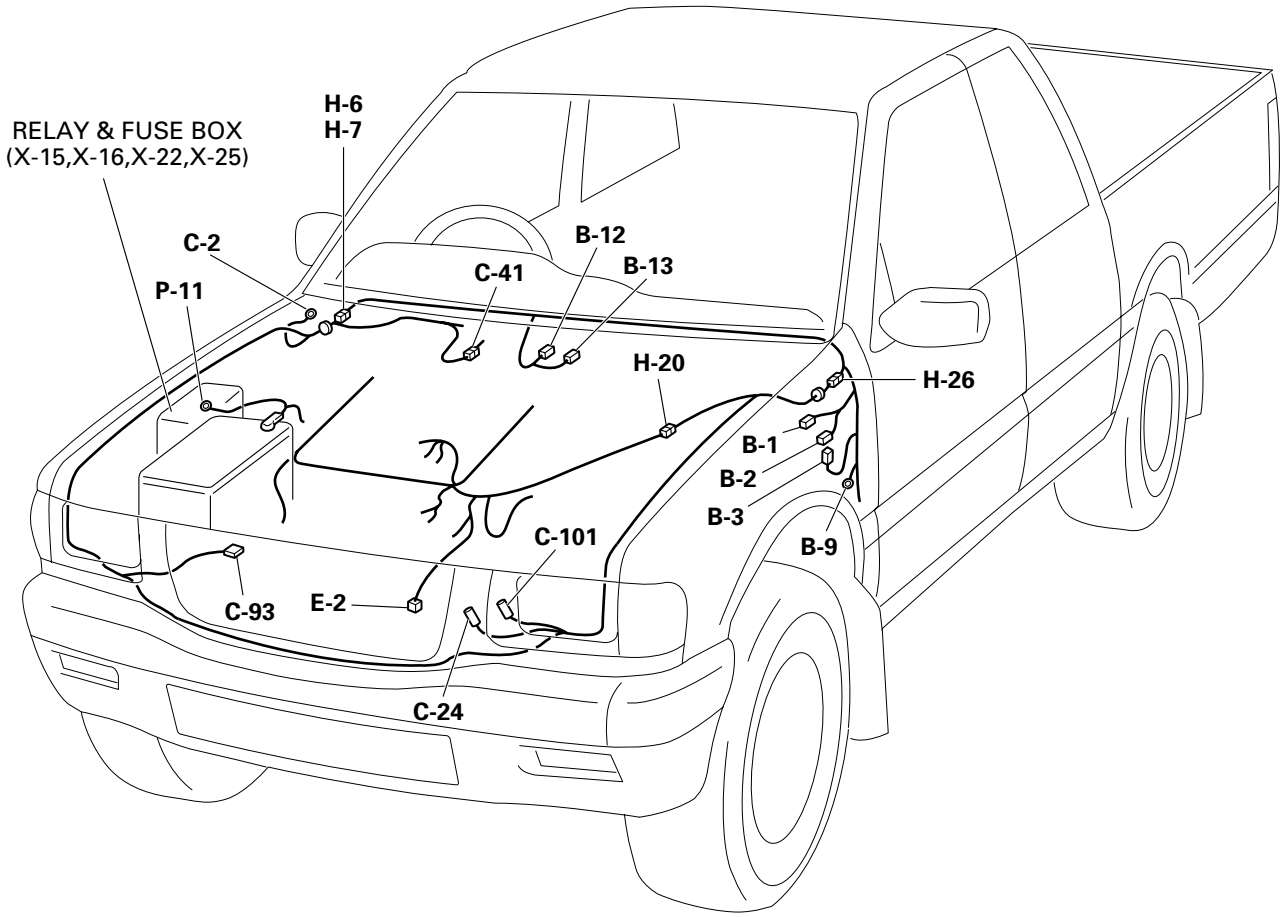

D08RW548

CIRCUIT DIAGRAM (GASOLINE ENGINE – LHD)

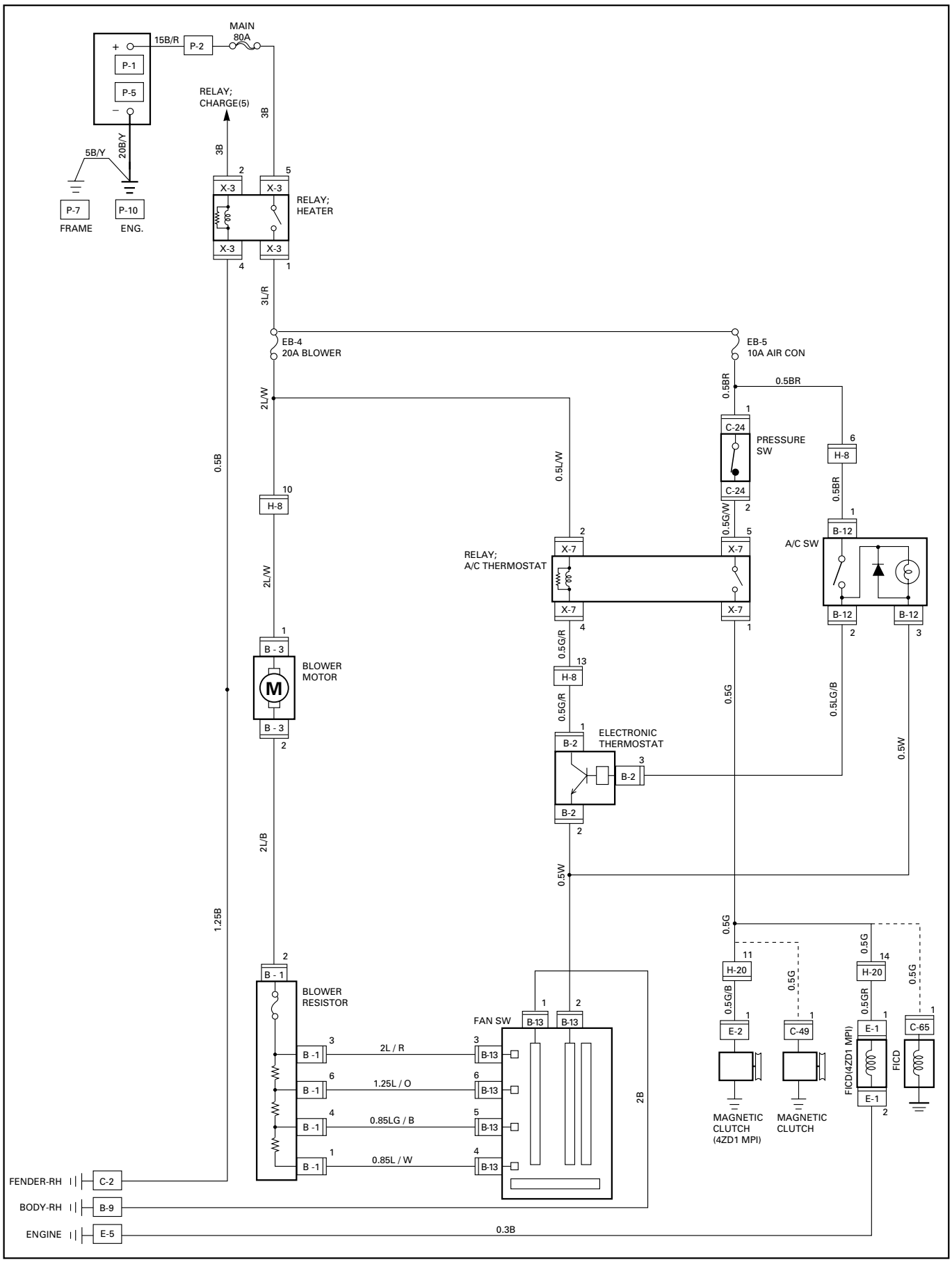

D08RVA08

CIRCUIT DIAGRAM (GASOLINE ENGINE 6VD1 - LHD)

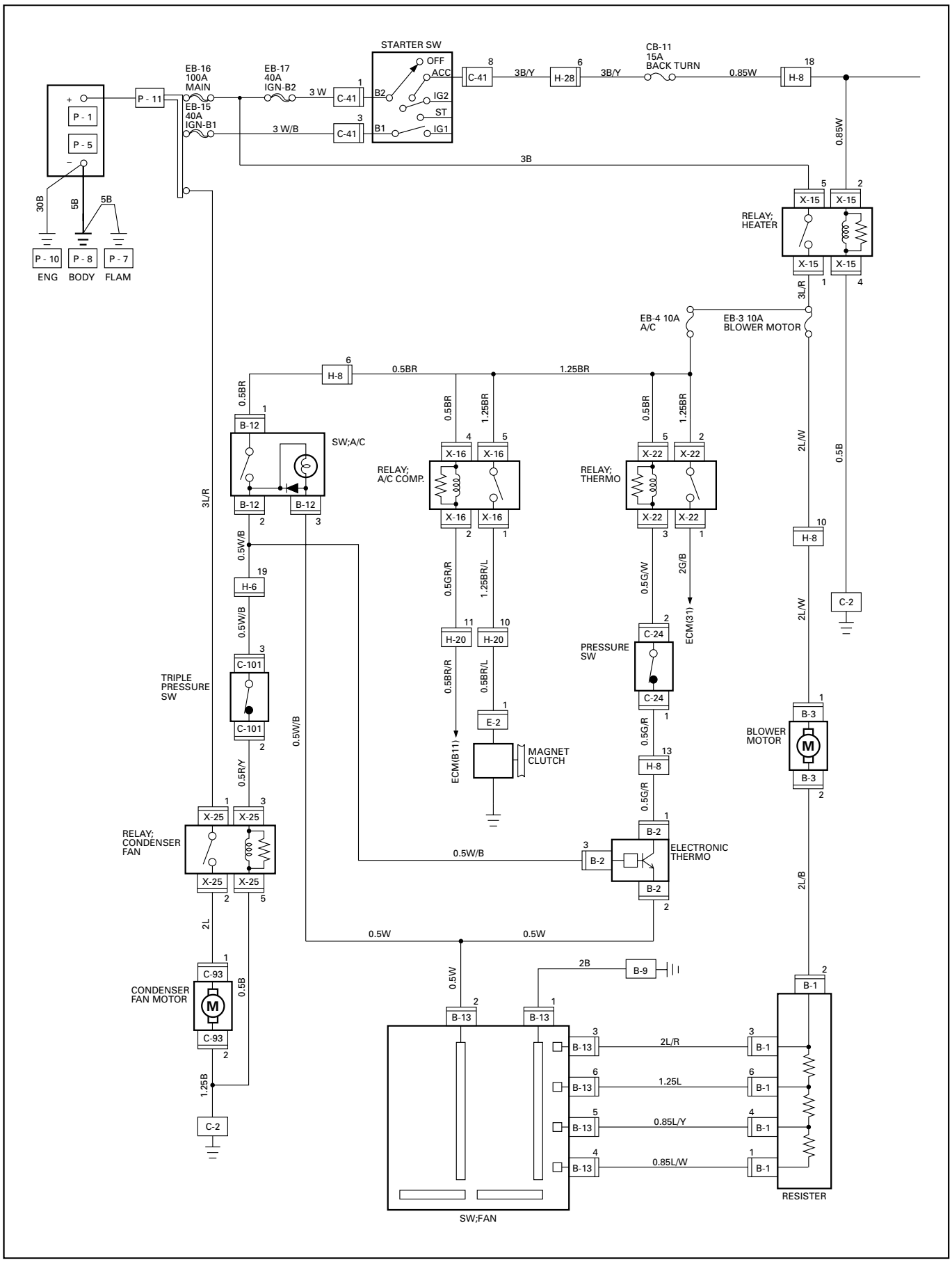

D08RW528

CIRCUIT DIAGRAM (GASOLINE ENGINE – RHD)

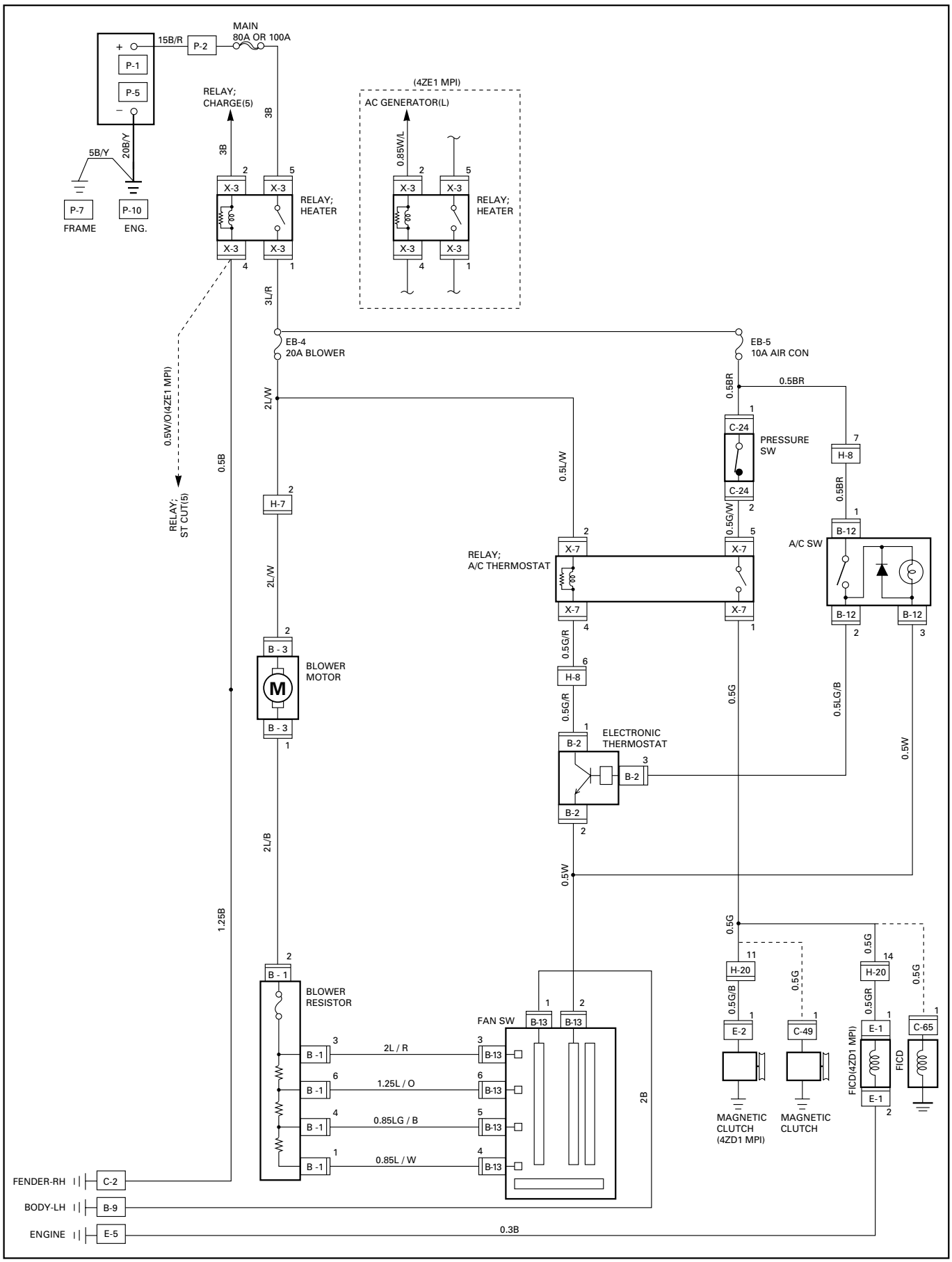

D08RVA09

CIRCUIT DIAGRAM (GASOLINE ENGINE 6VD1 – RHD)

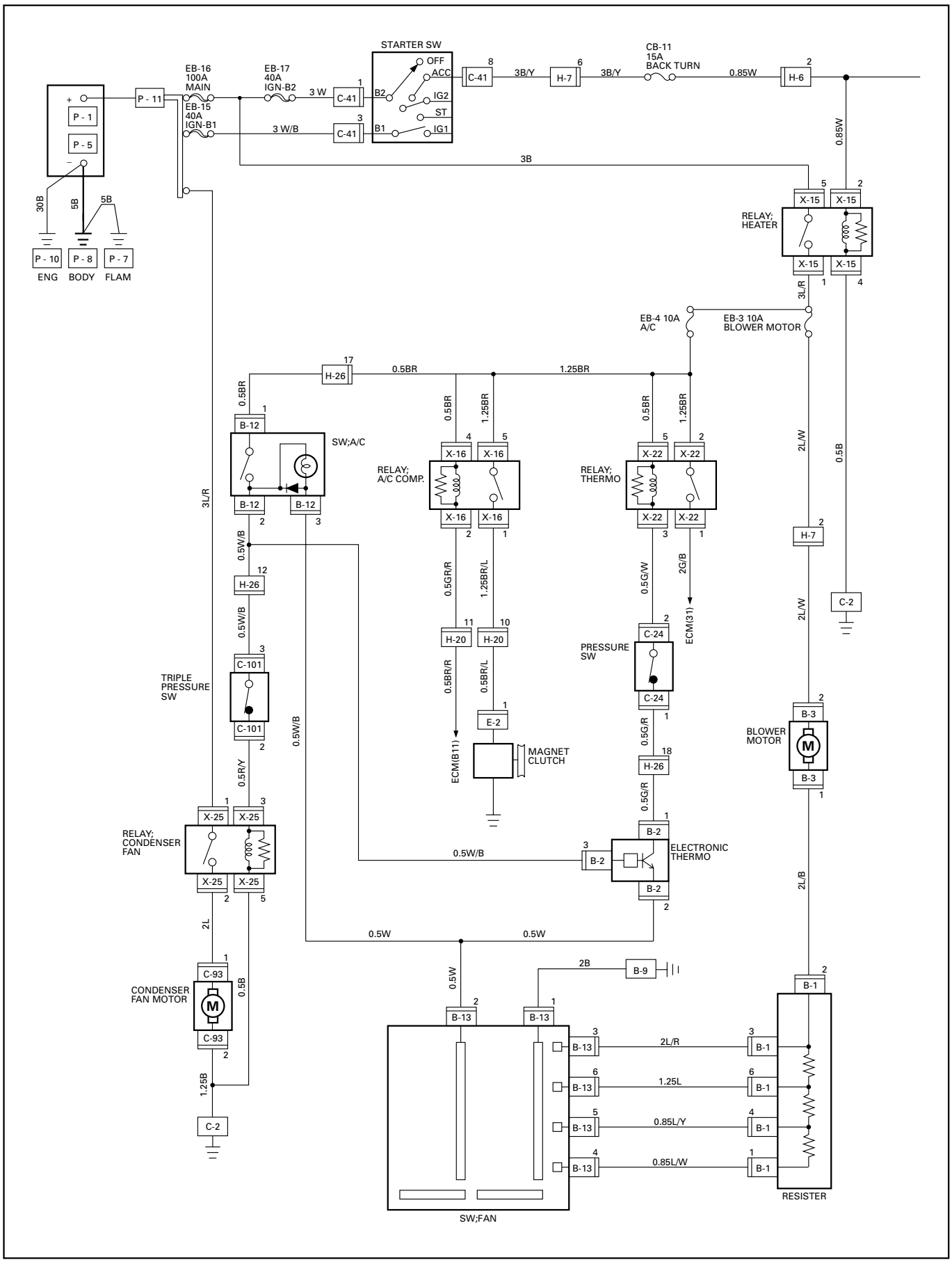

D08RW527

CIRCUIT DIAGRAM (DIESEL ENGINE – LHD)

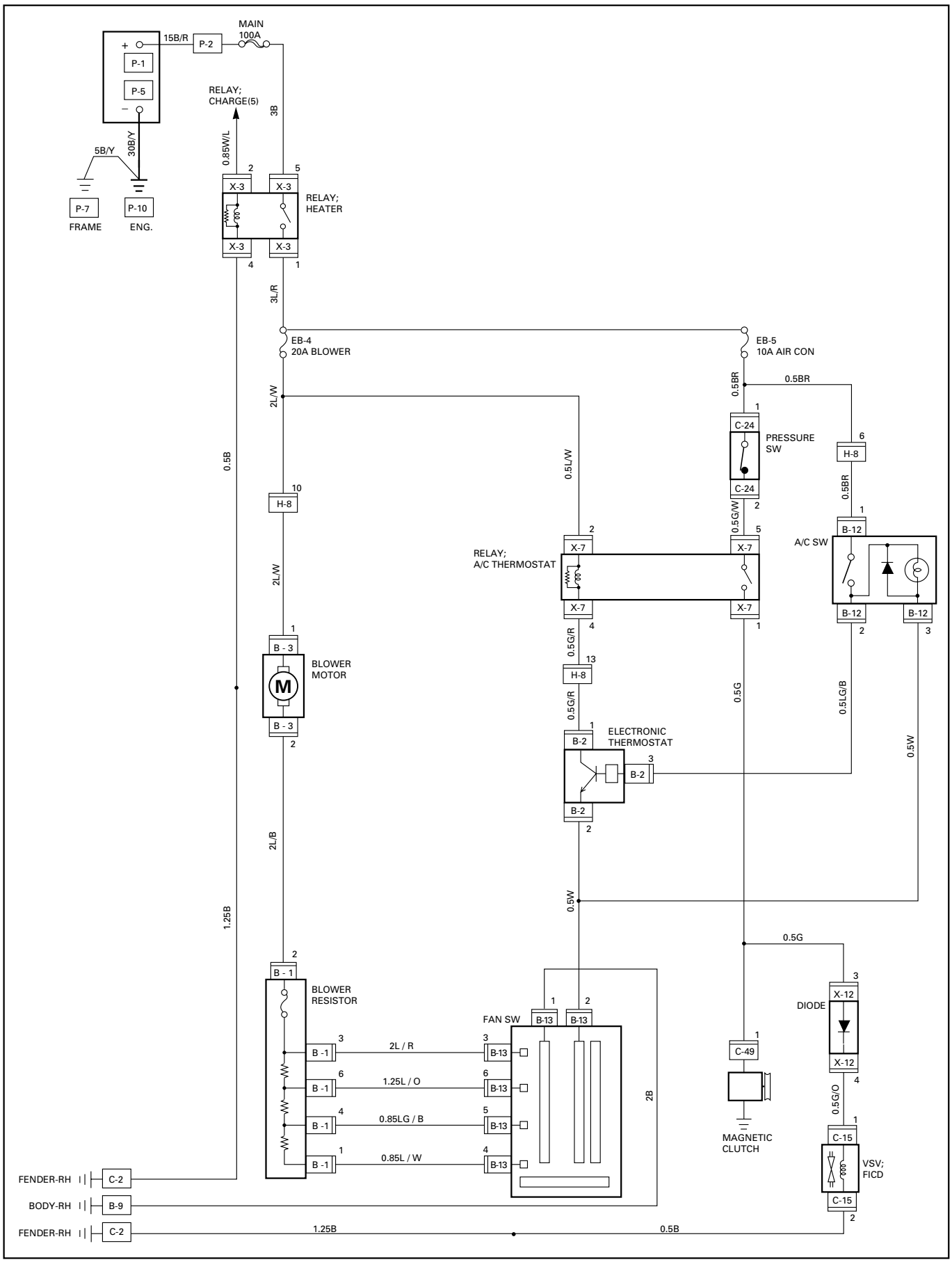

D08RVA10

CIRCUIT DIAGRAM (DIESEL ENGINE – RHD)

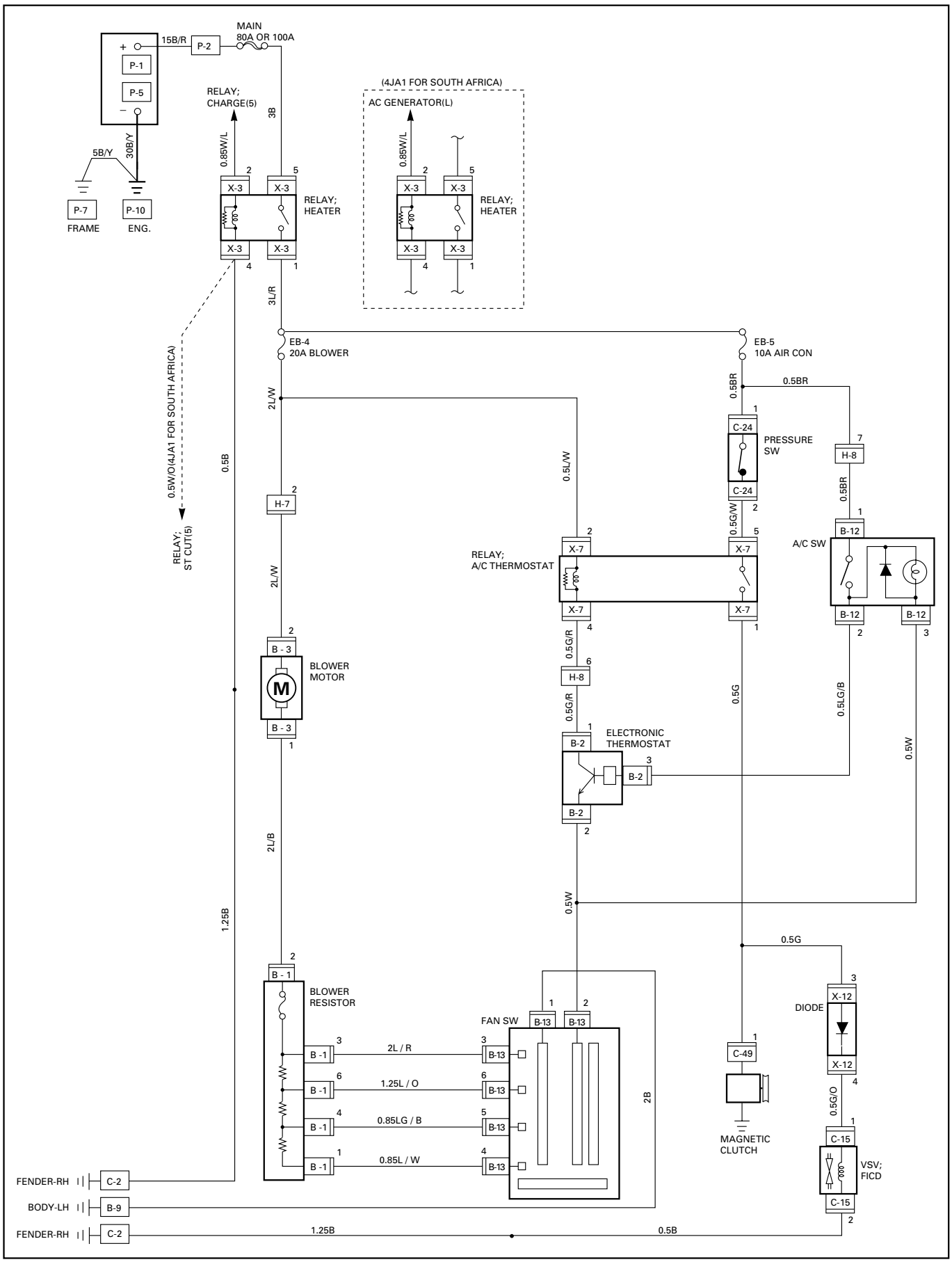

D08RVA11

POWER DOOR LOCK

PARTS LOCATION (LHD)

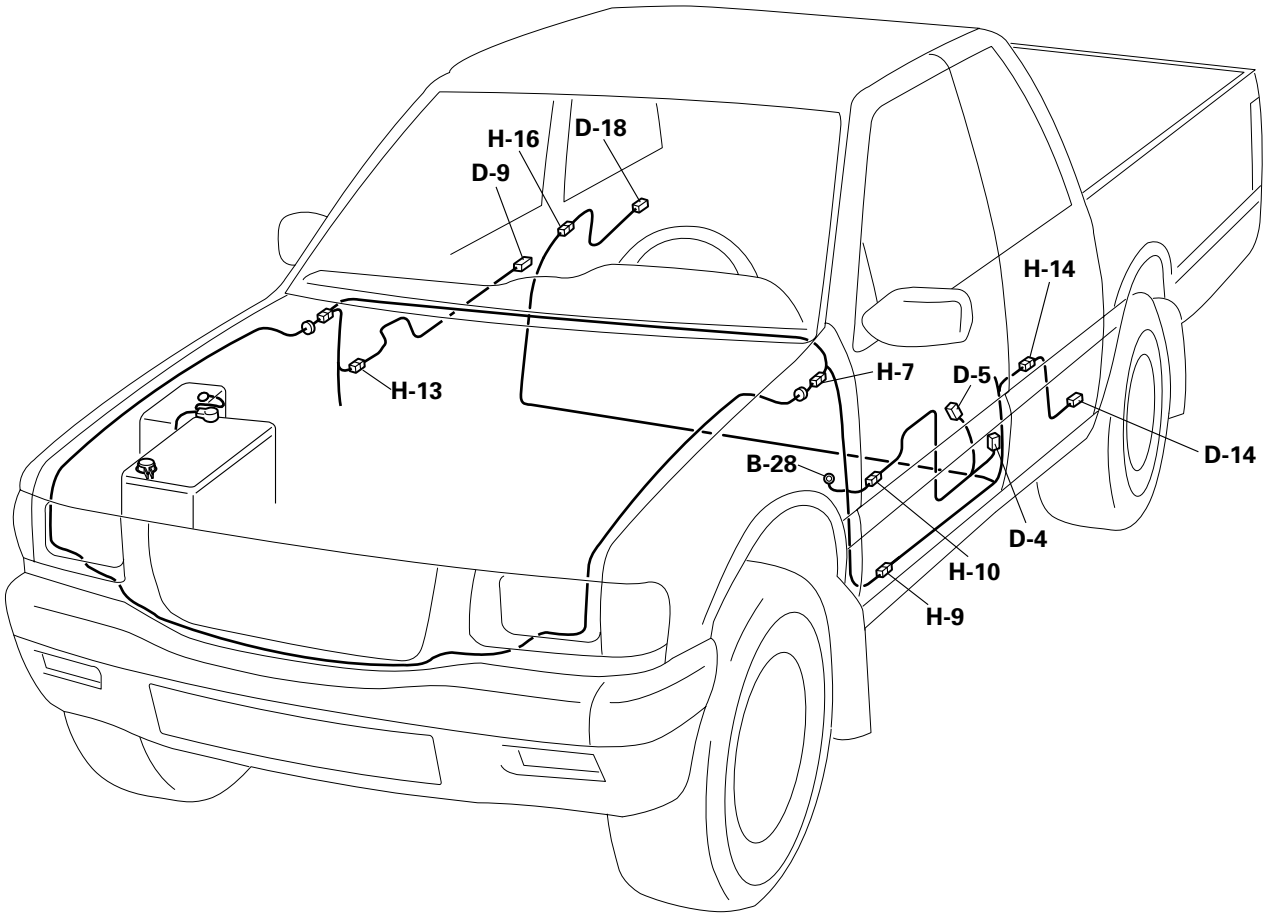

D08RVA38

PARTS LOCATION (RHD)

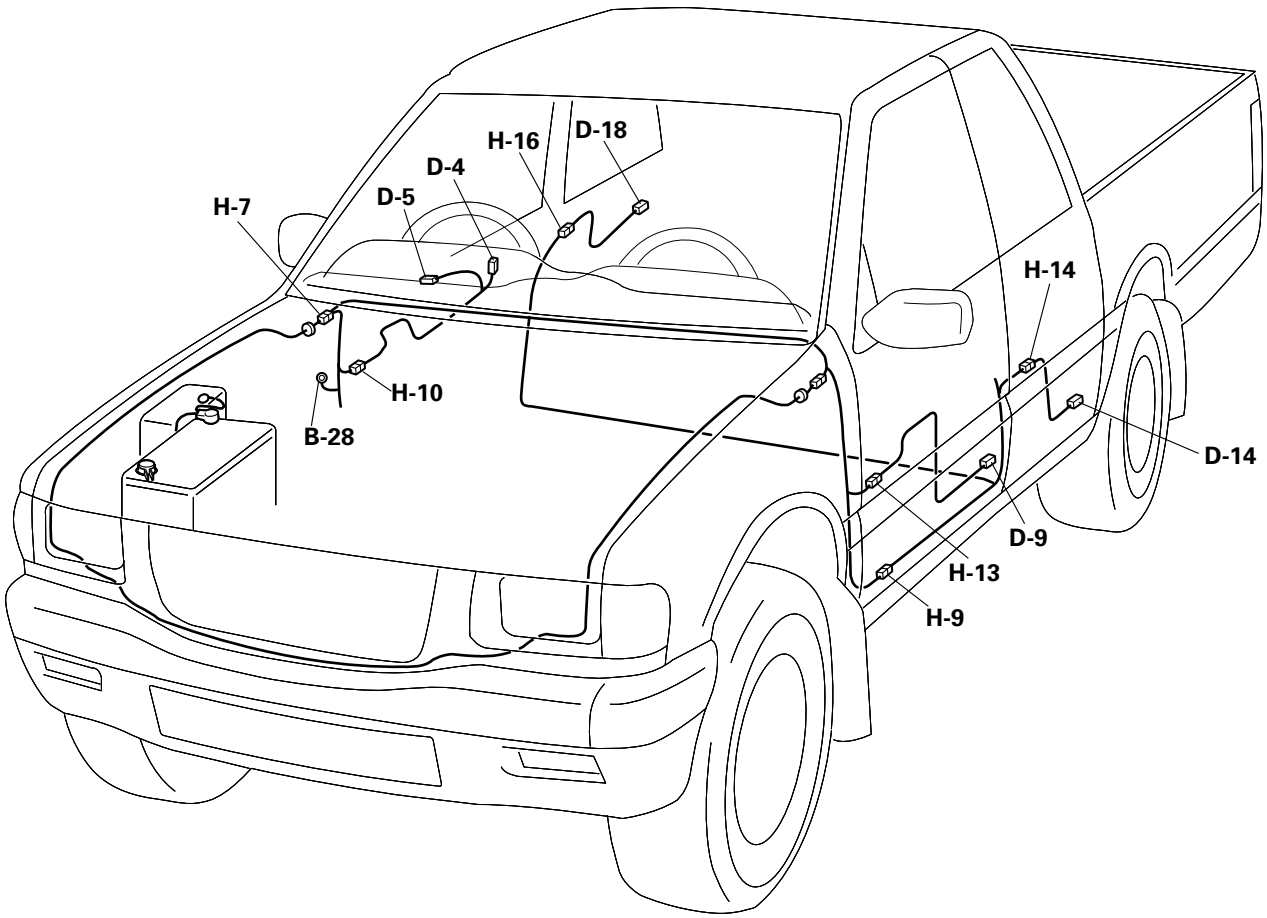

D08RVA39

CIRCUIT DIAGRAM

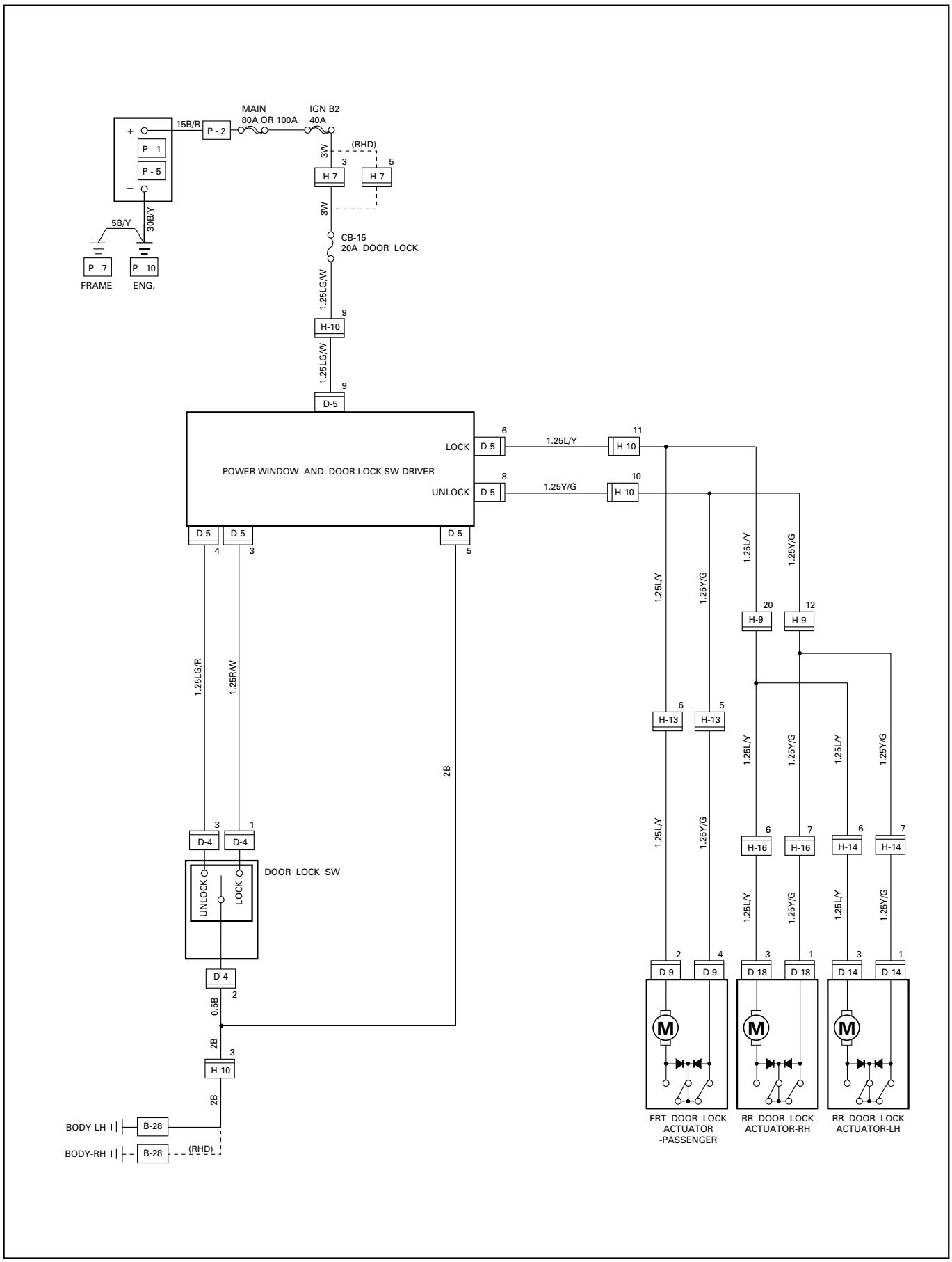

D08RV734

TROUBLE SHOOTING

QUICK CHART FOR CHECK POINTS

Check Points / Trouble Mode	Fuse CB-15 (20A)	Power Window & Door Lock Switch	Door Lock Switch	Door Lock Actuator			Cable Harness
		Driver's side	Driver's side	Passenger's side	RR-RH	RR-LH	
1. All the doors do not lock and unlock	○	○					○
2. All the doors do not get locked (or unlocked)		○					○
3. Driver's side door does not get locked (or unlocked)			○				○
4. FRT passenger's side door does not get locked (or unlocked)				○			○
5. RR door-RH does not get locked (or unlocked)					○		○
6. RR door-LH does not get locked (or unlocked)						○	○
7. Door lock does not operate when operating from the driver's seat side			○				○

1. All the doors do not lock and unlock

Checkpoint		Trouble Cause	Countermeasure
Fuse No. CB-15 (20A, Fuse box)	NG	Poor fuse contact or blown	Reinstall or replace the fuse No. CB-15 (20A)
OK			
Grounding point (B-28)	NG	Poor grounding point contact	Repair grounding point (B-28) contact
OK			
Voltage between the driver's side power window & door lock SW harness side connector terminal 9 D-5 and the ground (Should be battery voltage present)	NG	Open circuit or poor connector contact	Repair open circuit or connector contact
OK			
Continuity between 5 D-5 and B-28	NG	Open circuit or poor connector contact	Repair open circuit or connector contact
OK			
Driver's side power window & door lock SW. function	NG	SW. malfunction	Replace the driver's side power window & door lock SW.

2. All the doors do not get locked (or unlocked)

Continuity between the driver's side power window & door lock SW harness side connector terminals 6 D-5 and 8 D-5	NG	Open circuit or poor connector contact	Repair open circuit or connector contact
OK			
Driver's side power window & door lock SW. function	NG	SW. malfunction	Replace the driver's side power window & door lock SW.

3. Driver's side door does not get locked (or unlocked)

Checkpoint		Trouble Cause		Countermeasure
Door lock SW. function	NG	SW. malfunction	—	Replace the door lock SW.

4. FRT passenger's side door does not get locked (or unlocked)

FRT passenger's side door lock actuator function	NG	Actuator malfunction	—	Replace the FRT passenger's side door lock actuator

5. RR door-RH does not get locked (or unlocked)

RR door lock actuator-RH function	NG	Actuator malfunction	—	Replace the RR door lock actuator-RH

6. RR door-LH does not get locked (or unlocked)

RR door lock actuator-LH function	NG	Actuator malfunction	—	Replace the RR door lock actuator-LH

7. Door lock does not operate when operated from the driver's seat side

Grounding point (B-28)	NG	Poor grounding point contact	—	Repair grounding point (B-28) contact
OK				
Continuity between the door lock SW. side connector terminals 1 D-4 and 2 D-4 when the SW is locked and between 3 D-4 and 2 D-4 when the SW. is unlocked	NG	SW. malfunction	—	Replace the door lock SW.

REMOVAL AND INSTALLATION

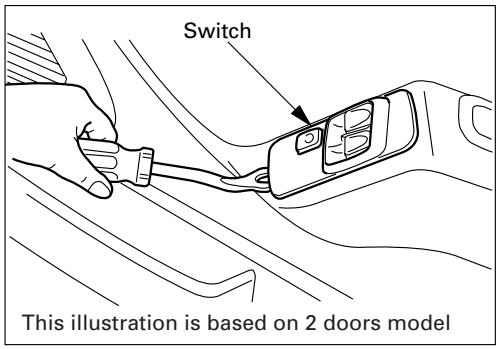

825RV089

DRIVER SEAT SIDE POWER WINDOW & DOOR LOCK SWITCH

Removal

1. Remove the switch by pushing the spring with the tip of a screwdriver.
2. Disconnect the connector.

Installation

To install, follow the removal steps in the reverse order.

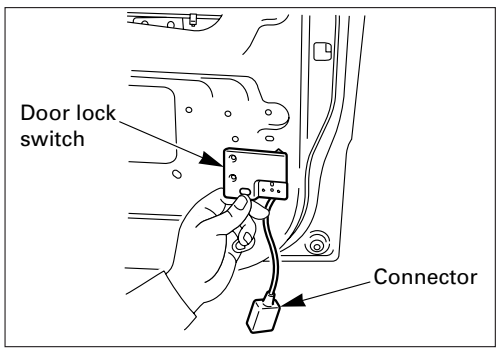

825RV056

DRIVER'S SIDE DOOR LOCK SWITCH

Removal

1. **Door Lock ASM**
   - Refer to the removal steps of the DOORS in Section 10 "BODY".
2. **Door Lock Switch**

Installation

To install, follow the removal steps in the reverse order.

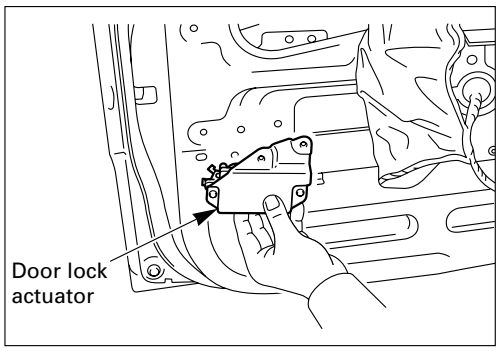

825RV057

FRT PASSENGER'S SIDE DOOR LOCK ACTUATOR

Removal

1. **Door Lock ASM**
   - Refer to the removal steps of the DOORS in Section 10 "BODY".
2. **Door Lock Actuator**
   - Remove the actuator fixing bolts.
   - Disconnect the door lock link rod.
   - Disconnect the actuator connector.

Installation

To install, follow the removal steps in the reverse order.

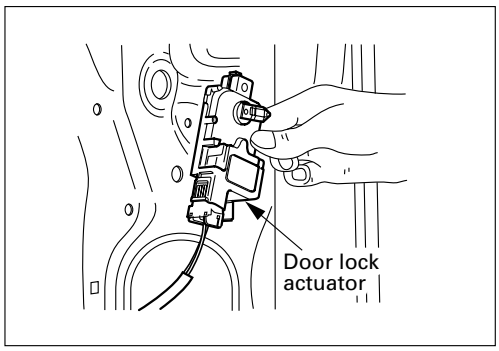

825RV097

RR DOOR LOCK ACTUATOR-LH & RH

Removal

1. **Door Lock ASM**
   - Refer to the removal steps of the DOORS in Section 10 "BODY".
2. **Door Lock Actuator**
   - Remove the actuator fixing bolts.
   - Disconnect the door lock link rod.
   - Disconnect the actuator connector.

Installation

To install, follow the removal steps in the reverse order.

INSPECTION AND REPAIR

D-5

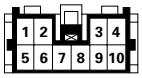

Harness side

Driver Seat Side Power Window & Door Lock Switch

1. **Harness Side Connector Circuit**

   Check voltage and continuity between the switch harness side connector terminals as shown in the following table.

Terminal No.	Wire color	Connecting to	Check item	Connecting terminal	Check condition		Standard
3	R/W	Door lock SW (Lock)	Continuity (Resistance)	3-Ground	Driver seat side door	Lock	Continuity
						Unlock	No continuity
4	LG/R	Door lock SW (Unlock)		4-Ground	Driver seat side door	Lock	No continuity
						Unlock	Continuity
5	B	Ground		5-Ground	—		Continuity
6	L/Y	Door lock actuator (Lock)		6 – 8	—		Continuity (There is some resistance)
8	Y/G	Door lock actuator (Unlock)		8 – 6	—		Continuity (There is some resistance)
9	LG/W	Fuse CB-15 (20A)	Voltage	9- Ground	—		Battery voltage (Approx. 12V)

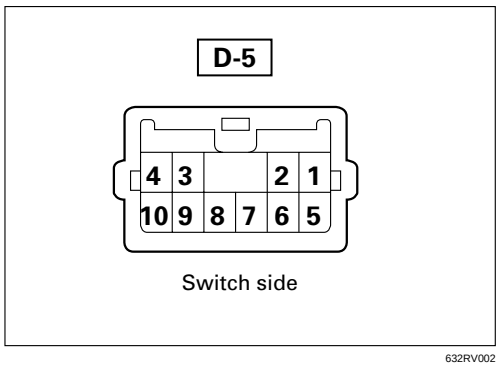

2. Switch Side Connector Circuit

Remove the switch connector, and check continuity and voltage between the switch connector terminals.

(Connect the (+) terminal of the battery to 9 D-5 and the (–) terminal to 5 D-5 .)

5 D-5 - 6 D-5 . . . . Continuity

5 D-5 - 8 D-5 . . . . Continuity

(Then, ground 3 D-5 .)

6 D-5 . . . . Current flow for approx. 1 second

(Disconnect the ground of 3 D-5 , and ground 4 D-5 .)

8 D-5 . . . . Current flow for approx. 1 second

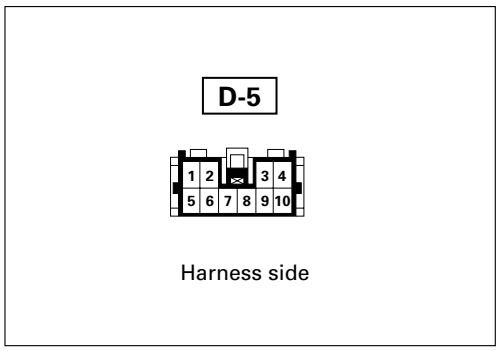

3. Door Lock Operation Test

After confirming that there is continuity between the switch harness side connector terminals 6 D-5 and 8 D-5 , apply the battery voltage to each of the terminals to conduct the operation test.

When the door lock will not operate, check the door lock actuator for any trouble.

Connecting terminals		Operation
8 (Y/G)	6 (L/Y)	
⊕	⊖	Unlock
⊖	⊕	Lock

D-4

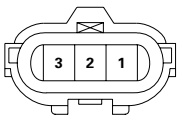

Switch side

Driver's Side Door Lock Switch

1. **Switch Side Connector Circuit**

   Check continuity between the switch connector terminals

SW position \ Terminal No.	1	2	3
Lock	○	○	
Unlock		○	○

D-9

Actuator side

Front Passenger's Side Door Lock Actuator

1. **Actuator Side Connector Circuit**

   Apply the battery voltage to the actuator connector terminals to check the operation.

   When the door lock actuator is checked on the vehicle and there is no continuity, and when the door lock actuator itself is checked and no trouble is found, check the circuit between the door lock actuator and the driver seat side power window & door lock switch for any failure.

Connecting terminals		Operation
2	4	
⊕	⊖	Lock
⊖	⊕	Unlock

D-14 D-18

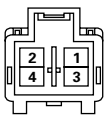

Actuator side

Rear Door Lock Actuator -LH & RH

1. **Actuator Side Connector Circuit**

   Apply the battery voltage to the actuator connector terminals to check the operation.

   When the door lock actuator is checked on the vehicle and there is no continuity, and when the door lock actuator itself is checked and no trouble is found, check the circuit between the door lock actuator and the driver seat side power window & door lock switch for any failure.

Connecting terminals		Operation
1	3	
⊖	⊕	Lock
⊕	⊖	Unlock

POWER WINDOW

PARTS LOCATION (LHD)

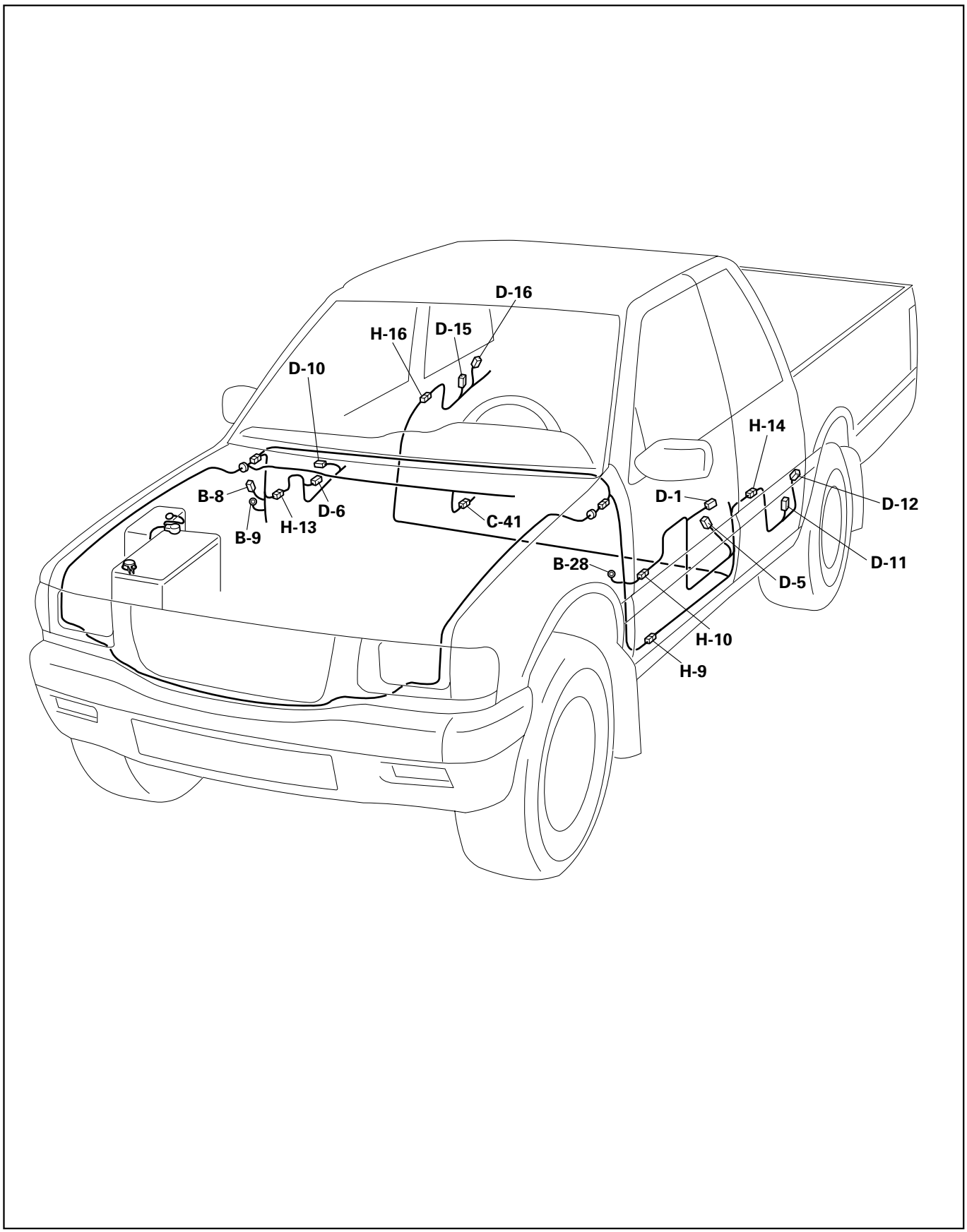

D08RVA40

PARTS LOCATION (RHD)

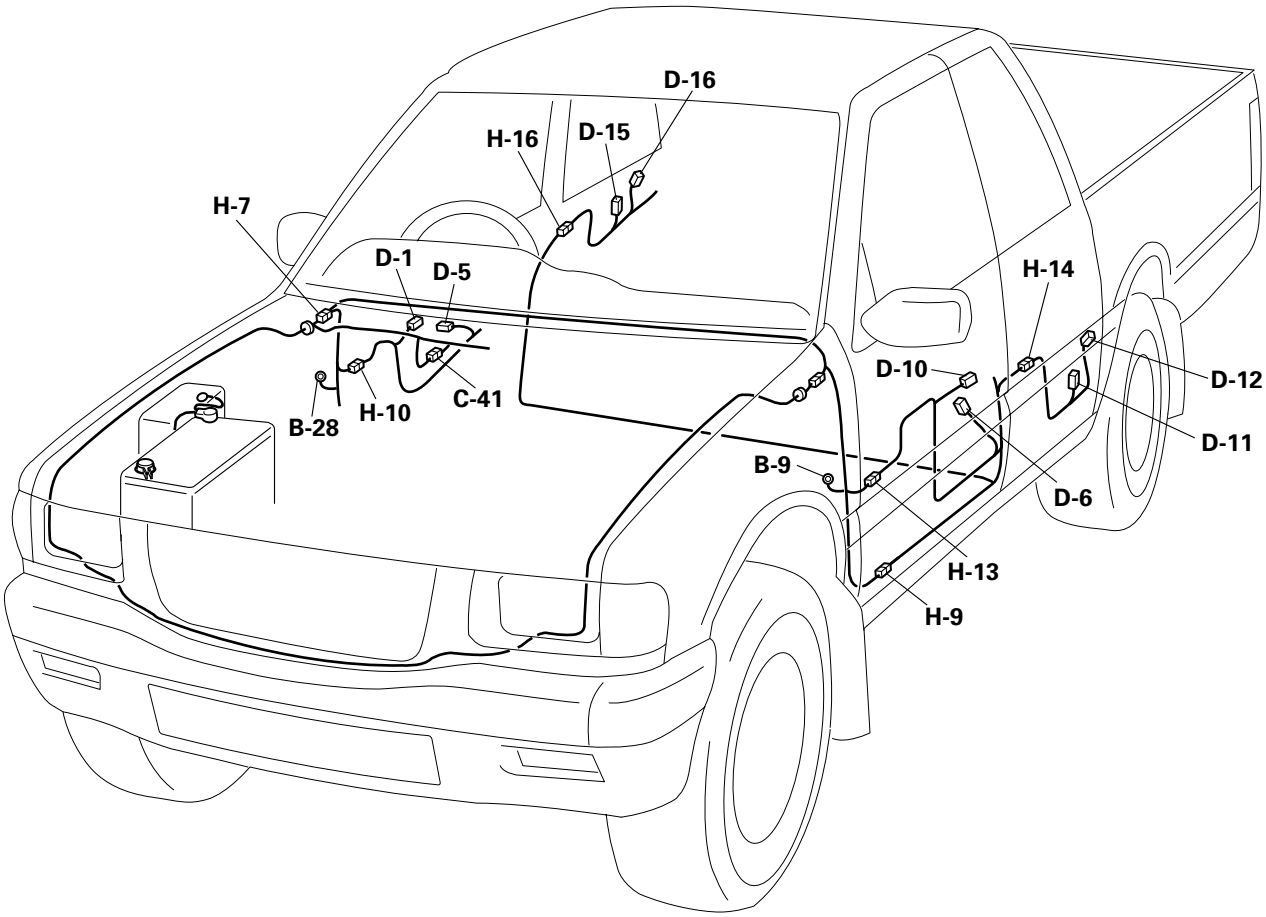

D08RVA41

CIRCUIT DIAGRAM (LHD)

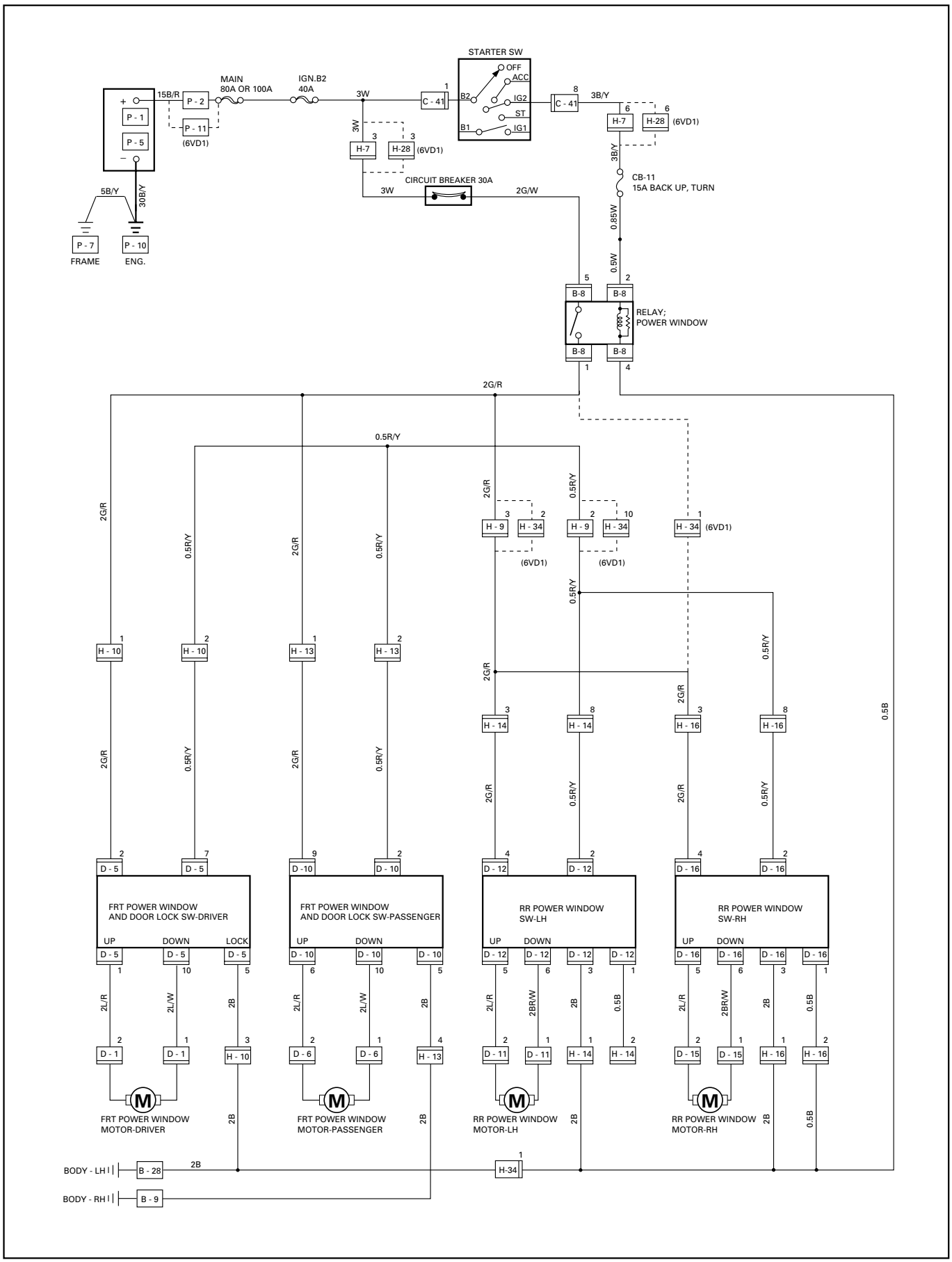

TROUBLE SHOOTING

CIRCUIT DIAGRAM (RHD)

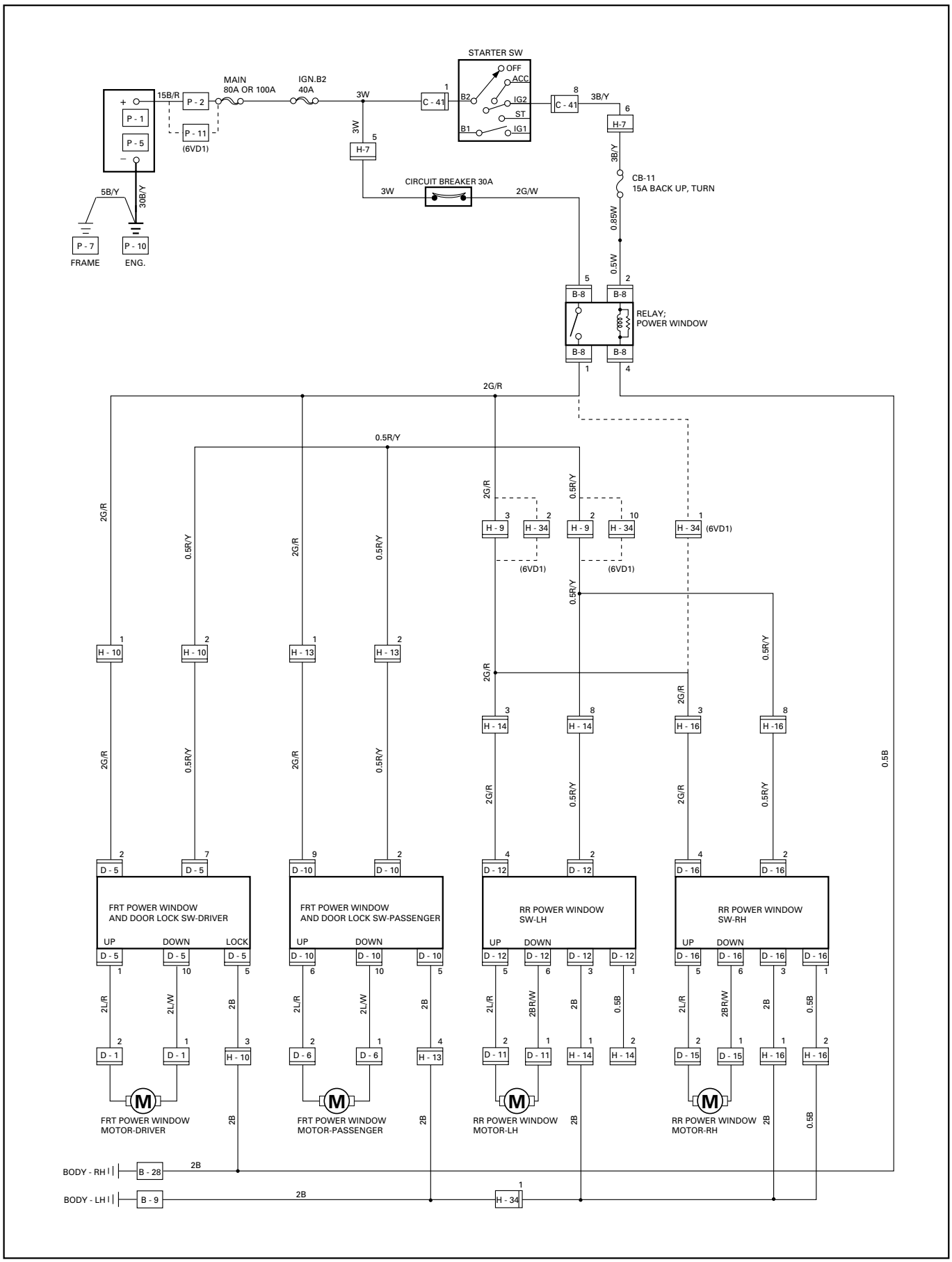

D08RW570

TROUBLE SHOOTING

QUICK CHART FOR CHECK POINTS

Trouble Mode	Check Points											
	Fuse CB-11 (15A)	Circuit Breaker (30A)	Relay; Power Window	Power Window & Door Lock Switch		Power Window Switch		Power Window Motor				Cable Harness
				Driver's Side	Passenger's Side	RR-LH	RR-RH	Driver's Side	Passenger's Side	RR-LH	RR-RH	
All windows will not operate	○	○	○	○								○
Lock SW does not function				○								
Driver's Window:												
Window does not operate	○	○	○	○				○				○
One-touch operation for "DOWN" movement will not operate				○								
Window operates in only one direction				○								
Front window on passenger seat side:												
Window does not operate				○	○				○			○
Window does not operate when operating the driver's SW				○								
Window does not operate when operating the passenger's SW				○	○							○
Window does operate in only one direction when operating the driver's SW				○	○							
Window does operate in only one direction when operating the passenger's seat side SW					○							
Rear window on left (or right) side:												
Window on left (or right) side does not operate				○		○	○			○	○	○
Window does not operate when operating the driver's SW				○								
Window does operate in only one direction when operating the driver's SW				○								
Window does operate in only one direction when operating the RR-LH (or RH) side SW						○	○					○

1. All windows do not operate

Checkpoint		Trouble Cause		Countermeasure
Fuse CB-11 (15A, Fuse box)	NG	Poor fuse contact or blown		Reinstall or replace the fuse No. CB-11(15A)
OK				
Circuit breaker (30A, Fuse box) function	NG	Circuit breaker malfunction		Replace the circuit breaker (30A)
OK				
Grounding points (B-9 and B-28)	NG	Poor grounding point contact		Repair grounding points (B-9 and B-28) contact
OK				
Power window relay function	NG	Power window relay malfunction		Replace the power window relay
OK				
Voltage between the power window relay harness side connector terminal 5 B-8 and the ground (Should be battery voltage present)	NG	Open circuit or poor connector contact		Repair an open circuit or a poor connection of the connectors between 3 H-7 (RHD: 5 H-7) and 5 B-8
OK				
Voltage between 2 D-5 and the ground (Should be battery voltage present)	NG	Open circuit or poor connector contact		Repair an open circuit or a poor connection of the connectors between 1 B-8 and 2 D-5
OK				
Voltage between B-28 and the ground	NG	Open circuit or poor connector contact		Repair an open circuit or a poor connection of the connectors between 5 D-5 and B-28 , or 4 B-8 and B-28

Continued on the next page

Checkpoint		Trouble Cause		Countermeasure
Continued from the previous page				
OK				
Driver seat side power window & door lock SW. function	NG	SW. malfunction	—	Replace the driver seat side power window & door lock SW.

2. Lock switch does not function

Driver seat side power window & door lock SW. function	NG	SW. malfunction	—	Replace the driver seat side power window & door lock SW.

3. Window on the driver's side does not operate

Driver seat side power window & door lock SW. function	NG	SW. malfunction	—	Replace the driver seat side power window & door lock SW.
OK				
1. Driver seat side power window motor function when connecting the motor connector 2 D-1 to the battery (+) terminal, and 1 D-1 to the (–) terminal (Should the motor rotate in the "UP" direction of the window) 2. Driver seat side power window motor function when connecting the motor connector 1 D-1 to the battery (+) terminal, and 2 D-1 to the (–) terminal (Should the motor rotate in the "DOWN" direction of the window)	NG	Motor malfunction	—	Replace the driver seat side power window motor
OK				
Continuity between 1 D-5 and 2 D-1, or 10 D-5 and 1 D-1	NG	Open circuit or poor connector contact	—	Repair open circuit or connector contact

4. Window on the front passenger's side does not operate

Checkpoint		Trouble Cause	Countermeasure
Front passenger's power window & door lock SW. function	NG	SW. malfunction	Replace the front passenger's power window & door lock SW.
OK			
Driver seat side power window & door lock SW. function	NG	SW. malfunction	Replace the driver seat side power window & door lock SW.
OK			
1. Front passenger's power window motor function when connecting the motor connector 2 D-6 to the battery (+) terminal, and 1 D-6 to the (–) terminal (Should the motor rotate in the "UP" direction of the window) 2. Front passenger's power window motor function when connecting the motor connector 1 D-6 to the battery (+) terminal, and 2 D-6 to the (–) terminal. (Should the motor rotate in the "DOWN" direction of the window)	NG	Motor malfunction	Replace the front passenger's power window motor
OK			
Continuity between 6 D-10 and 2 D-6, or 10 D-10 and 1 D-6	NG	Open circuit or poor connector contact	Repair open circuit or connector contact

5. Rear window on the left (right) side does not operate

Checkpoint		Trouble Cause	Countermeasure
Rear power window SW.-LH (RH) function	NG	SW. malfunction	Replace the rear power window SW.-LH (RH)
OK			
Driver seat side power window & door lock SW. function	NG	SW. malfunction	Replace the driver seat side power window & door lock SW.
OK			
1. Rear power window motor-LH (RH) function when connecting the motor connector 2 D-11 (2 D-15) to the battery (+) terminal, and 1 D-11 (1 D-15) to the (–) terminal (Should the motor rotate in the "UP" direction of the window) 2. Rear power window motor-LH (RH) function when connecting the motor connector 1 D-11 (1 D-15) to the battery (+) terminal, and 2 D-11 (2 D-15) to the (–) terminal (Should the motor rotate in the "DOWN" direction of the window)	NG	Motor malfunction	Replace the rear power window motor
OK			
Continuity between 5 D-12 and 2 D-11 (5 D-16 and 2 D-15), or 6 D-12 and 1 D-11 (6 D-16 and 1 D-15)	NG	Open circuit or poor connector contact	Repair open circuit or connector contact

REMOVAL AND INSTALLATION

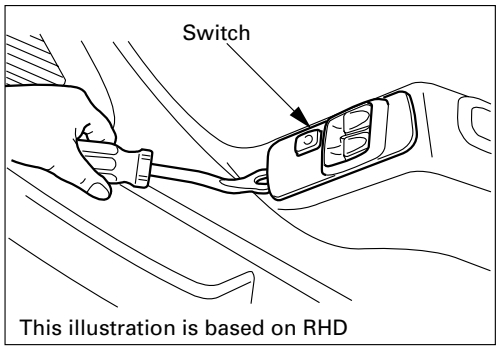

825RV089

DRIVER SEAT SIDE POWER WINDOW & DOOR LOCK SWITCH (2 DOORS MODEL)

Removal

1. Remove the switch by pushing the spring with the tip of a screwdriver.
2. Disconnect the connector.

Installation

To install, follow the removal steps in the reverse order.

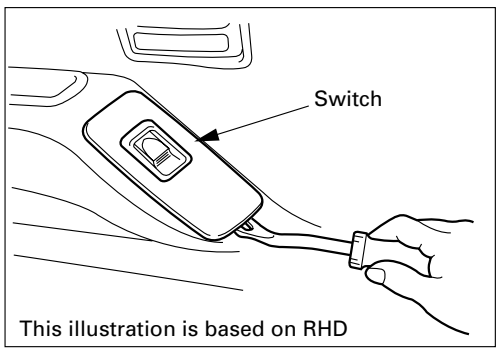

825RV086

FRONT PASSENGER'S POWER WINDOW & DOOR LOCK SWITCH (2 DOORS MODEL)

Removal

1. Remove the switch by pushing the spring with the tip of a screwdriver.
2. Disconnect the connector.

Installation

To install, follow the removal steps in the reverse order.

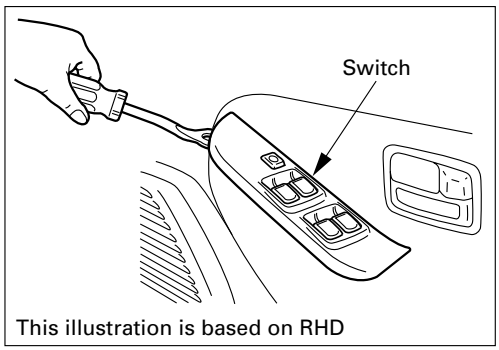

825RV098

DRIVER SEAT SIDE POWER WINDOW & DOOR LOCK SWITCH (4 DOORS MODEL)

Removal

1. Remove the switch by pushing the spring with the tip of a screwdriver.
2. Disconnect the connector.

Installation

To install, follow the removal steps in the reverse order.

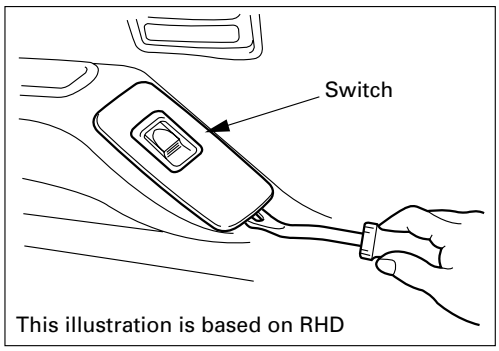

825RV086

FRONT PASSENGER'S POWER WINDOW & DOOR LOCK SWITCH (4 DOORS MODEL)

Removal

1. Remove the switch by pushing the spring with the tip of a screwdriver.
2. Disconnect the connector.

Installation

To install, follow the removal steps in the reverse order.

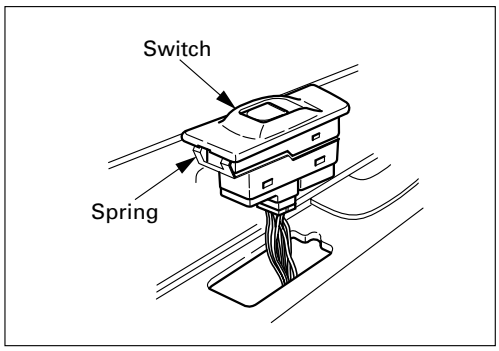

825RV096

REAR POWER WINDOW & DOOR LOCK SWITCH-LH & RH

Removal

1. Remove the switch by pushing the spring with the tip of a screwdriver.
2. Disconnect the connector.

Installation

To install, follow the removal steps in the reverse order.

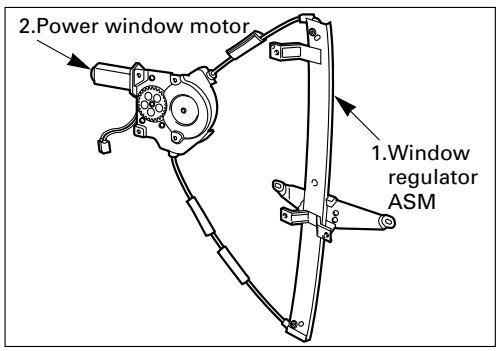

825RV091

DRIVER SEAT SIDE POWER WINDOW MOTOR

Removal

1. **Window Regulator ASM**
   - Refer to the removal steps of the WINDOW REGULATOR/POWER WINDOW MOTOR in Section 10 “BODY”.
2. **Power Window Motor**
   - Loosen the fixing bolts to remove the power window motor from the regulator.

Installation

To install, follow the removal steps in the reverse order.

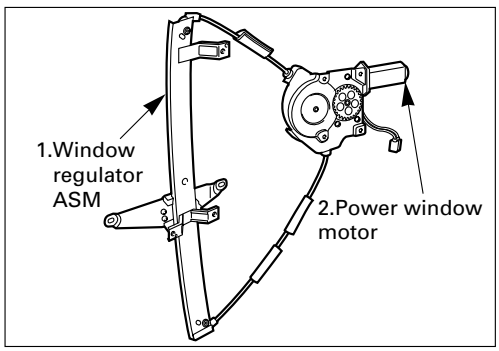

825RV090

FRONT PASSENGER’S POWER WINDOW MOTOR

Removal

1. **Window Regulator ASM**
   - Refer to the removal steps of the WINDOW REGULATOR/POWER WINDOW MOTOR in Section 10 “BODY”.
2. **Power Window Motor**
   - Loosen the fixing bolts to remove the power window motor from the regulator.

Installation

To install, follow the removal steps in the reverse order.

REAR POWER WINDOW MOTOR-LH & RH

Removal and Installation

Refer to the “DRIVER SEAT SIDE POWER WINDOW MOTOR” removal and installation steps in this section.

INSPECTION AND REPAIR

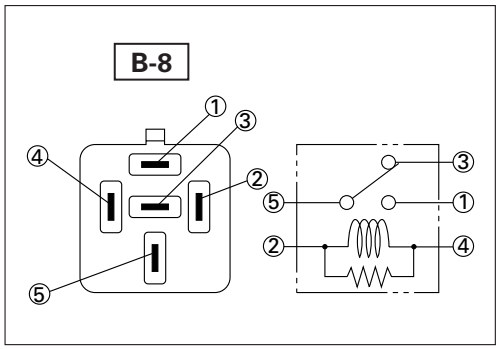

060RV005

Power Window Relay

Check continuity between the relay terminals.

① - ⑤ . . . . . No continuity

(When battery voltage is applied between ② and ④)

① - ⑤ . . . . . Continuity

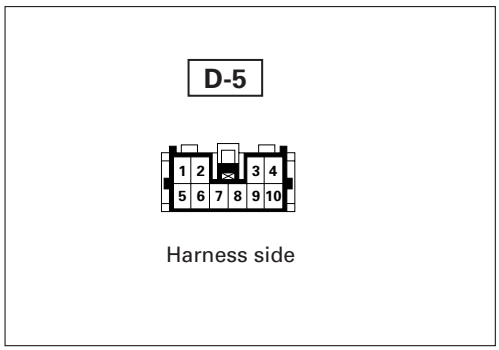

Driver Seat Side Power Window & Door Lock Switch

1. **Harness Side Connector Circuit**

   Disconnect the switch connector, and check voltage and continuity between the harness side connector terminals as shown in the following table.

Terminal No.	Wire color	Connecting to	Check item	Connecting terminal	Check condition	Standard
2	G/R	Power window relay	Voltage	2-Ground	Starter SW “ON”	Approx. 12V
1	L/R	Power window motor	Continuity	1 – 10	—	Continuity
10	L/W					
5	B	Ground	Continuity	5-Ground	—	Continuity

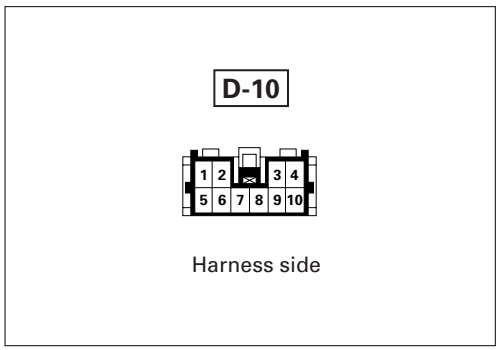

Front Passenger’s Power Window & Door Lock Switch

1. **Harness Side Connector Circuit**

   Disconnect the switch connector, and check voltage and continuity between the harness side connector terminals as shown in the following table.

Terminal No.	Wire color	Connecting to	Check item	Connecting terminal	Check condition	Standard
9	G/R	Power window relay	Voltage	9-Ground	Starter SW "ON"	Approx. 12V
6	L/R	Power window motor	Continuity	6 – 10	—	Continuity
10	L/W					
5	B	Ground	Continuity	5-Ground	—	Continuity

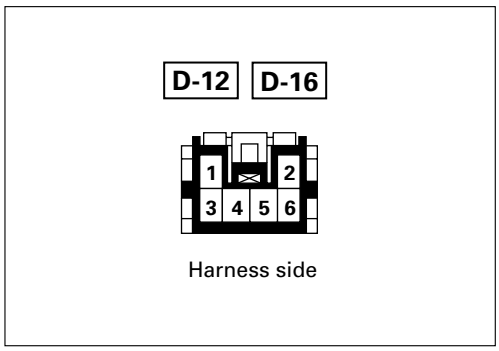

Rear Power Window Switch-LH & RH

1. **Harness Side Connector Circuit**

   Disconnect the switch connector, and check voltage and continuity between the harness side connector terminals as shown in the following tables.

D-12 (RR–LH)						
Terminal No.	**Wire color**	**Connecting to**	**Check item**	**Connecting terminal**	**Check condition**	**Standard**
4	G/R	Power window relay	Voltage	4-Ground	Starter SW "ON"	Approx. 12V
5	L/R	Power window motor	Continuity	5 – 6	—	Continuity
6	BR/W					
3	B	Ground	Continuity	3-Ground	—	Continuity
D-16 (RR–RH)						
Terminal No.	**Wire color**	**Connecting to**	**Check item**	**Connecting terminal**	**Check condition**	**Standard**
4	G/R	Power window relay	Voltage	4-Ground	Starter SW "ON"	Approx. 12V
5	L/R	Power window motor	Continuity	5 – 6	—	Continuity
6	BR/W					
3	B	Ground	Continuity	3 – 1	—	Continuity
1	B					

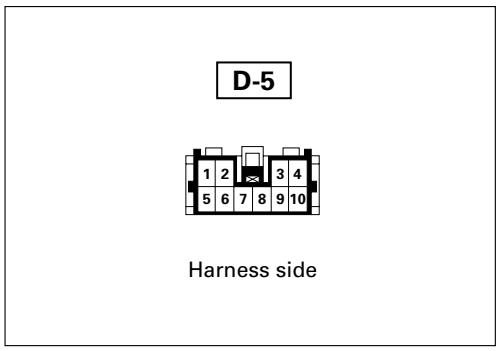

Driver Seat Side Power Window Motor

1. **Driver Seat Side Power Window & Door Lock Switch Connector Circuit**

   Disconnect the switch connector, apply the battery voltage (12V) to the harness side connector terminals and check operation.

Connecting terminals		Operation direction
1 (L/R)	10 (L/W)	
⊖	⊕	DOWN
⊕	⊖	UP

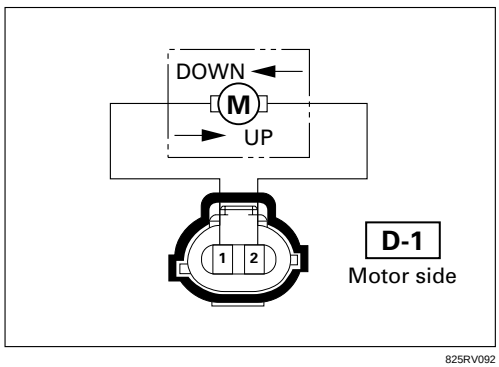

2. **Driver Seat Side Power Window Motor Connector Circuit**

   Disconnect the switch connector, apply the battery voltage (12V) to the motor side connector terminals and check operation.

Connecting terminals		Operation direction
1	2	
⊕	⊖	DOWN
⊖	⊕	UP

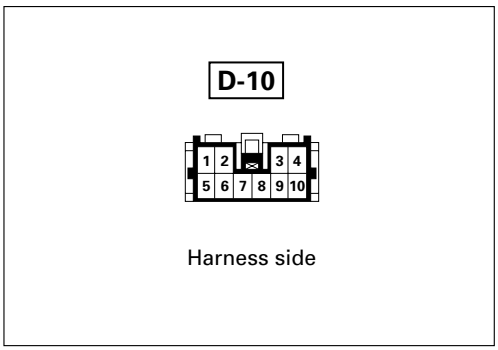

Front Passenger's Power Window Motor

1. **Front Passenger's Power Window Switch & Door Lock Switch Connector Circuit**

   Disconnect the motor connector, apply the battery voltage (12V) to the harness side connector terminals and check operation.

Connecting terminals		Operation direction
6 (L/R)	10 (L/W)	
⊖	⊕	DOWN
⊕	⊖	UP

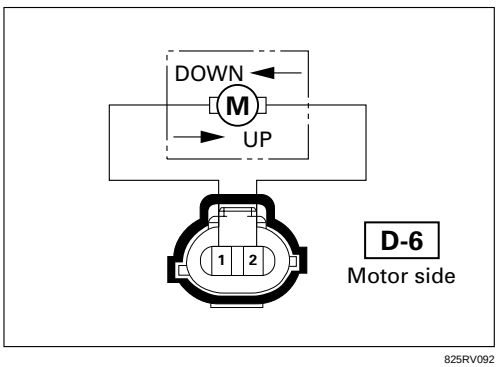

2. **Front Passenger's Power Window Motor Connector Circuit**

   Disconnect the switch connector, apply the battery voltage (12V) to the motor side connector terminals and check operation.

Connecting terminals		Operation direction
1	2	
⊕	⊖	DOWN
⊖	⊕	UP

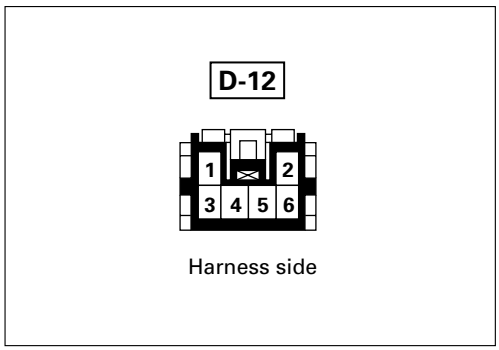

Rear Passenger's Power Window Motor-LH

1. **Rear Power Window Switch-LH Connector Circuit**

   Disconnect the motor connector, apply the battery voltage (12V) to the harness side connector terminals and check operation.

Connecting terminals		Operation direction
5 (L/R)	6 (BR/W)	
⊖	⊕	DOWN
⊕	⊖	UP

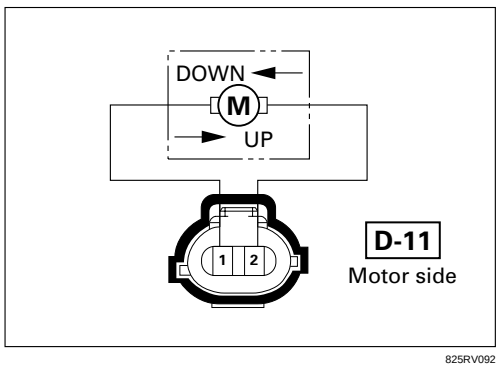

2. **Rear Power Window Motor-LH Connector Circuit**

   Disconnect the switch connector, apply the battery voltage (12V) to the motor side connector terminals and check operation.

Connecting terminals		Operation direction
1	2	
⊕	⊖	DOWN
⊖	⊕	UP

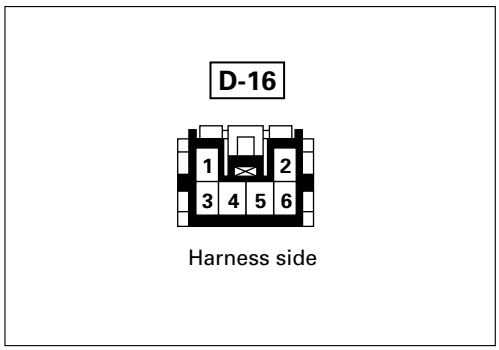

Rear Power Window Motor-RH

1. **Rear Power Window Switch-RH Connector Circuit**

   Disconnect the motor connector, apply the battery voltage (12V) to the harness side connector terminals and check operation.

Connecting terminals		Operation direction
5 (L/R)	6 (BR/W)	
⊖	⊕	DOWN
⊕	⊖	UP

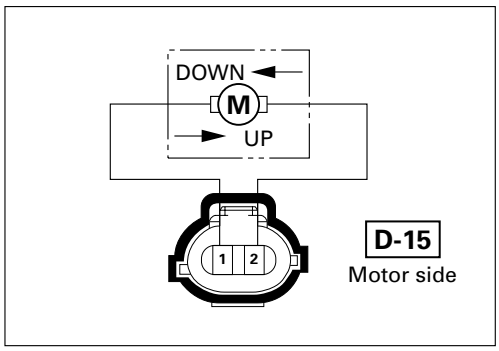

2. **Rear Power Window Motor-RH Connector Circuit**

   Disconnect the switch connector, apply the battery voltage (12V) to the motor side connector terminals and check operation.

Connecting terminals		Operation direction
1	2	
⊕	⊖	DOWN
⊖	⊕	UP

MEMO

AUDIO, CLOCK AND CIGARETTE LIGHTER

PARTS LOCATION (LHD)

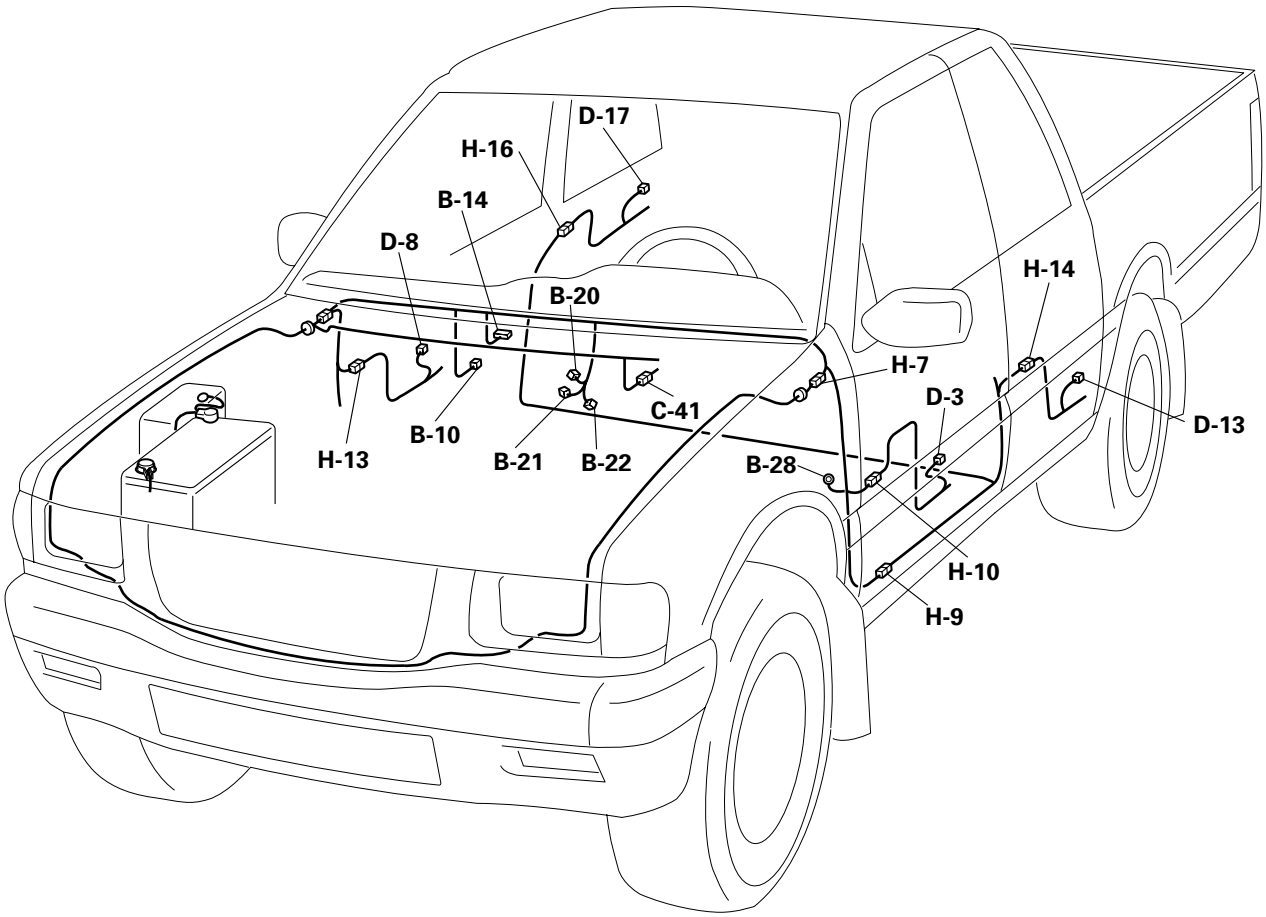

D08RVA54

PARTS LOCATION (RHD)

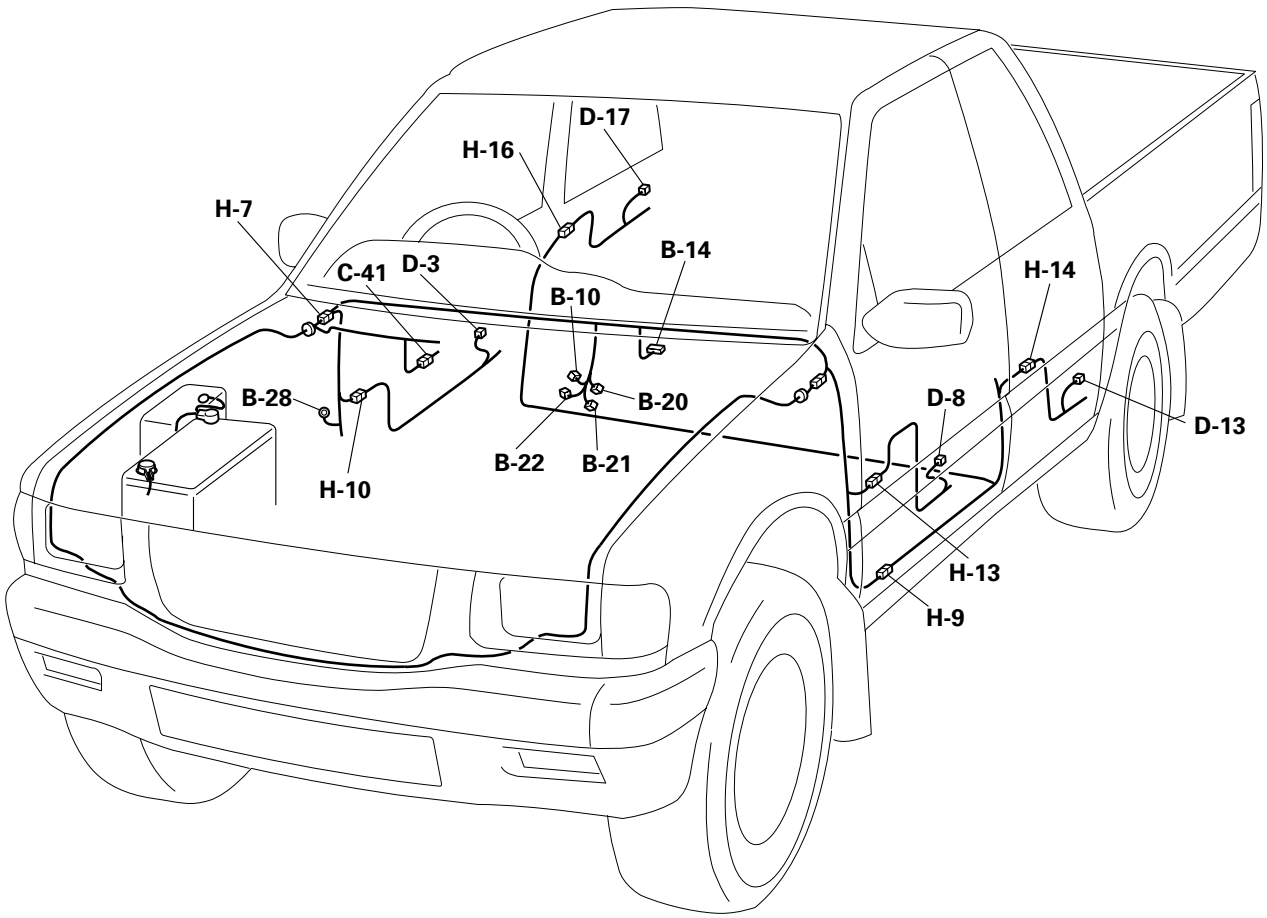

D08RVA52

CIRCUIT DIAGRAM (LHD)

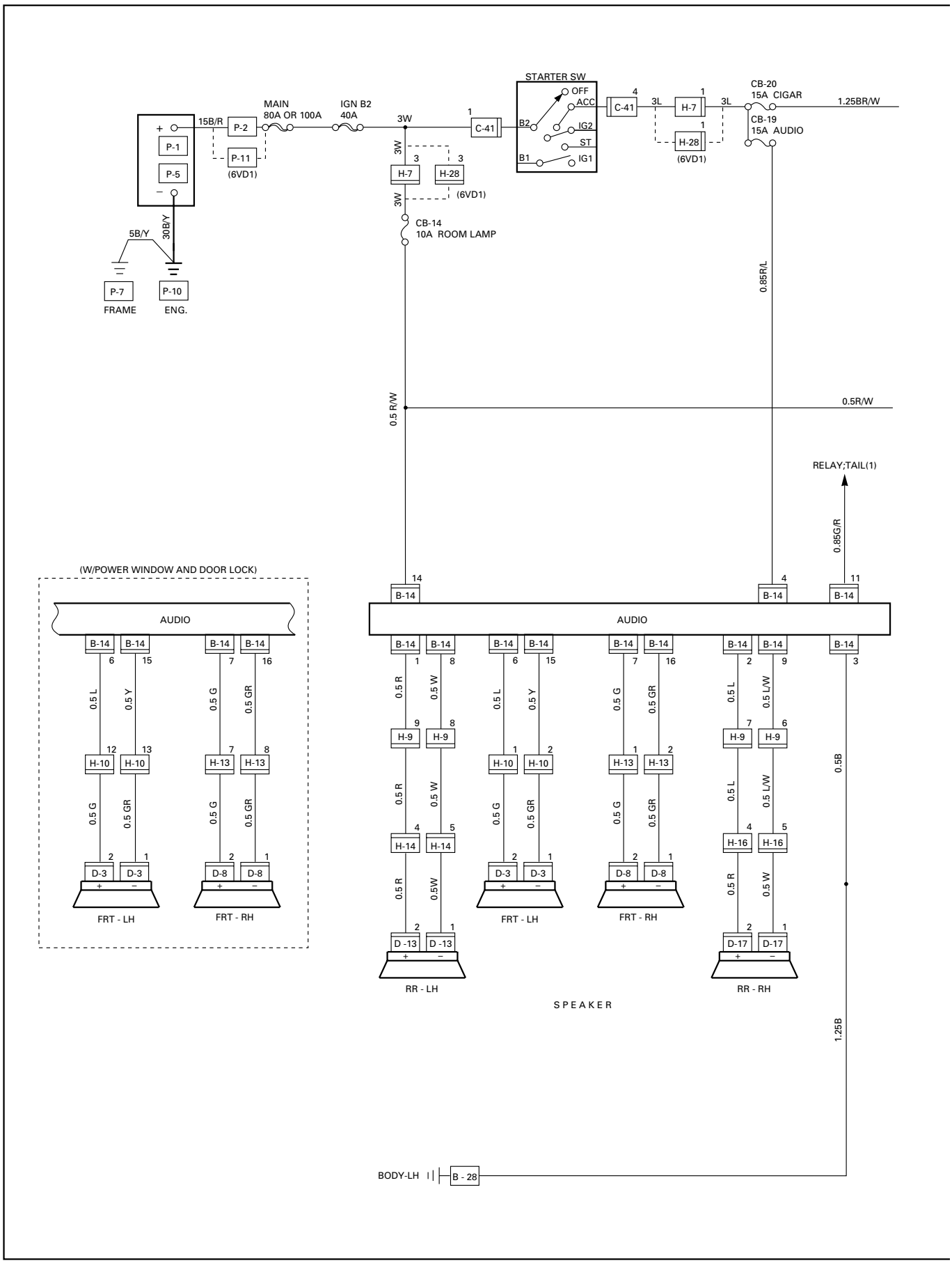

D08RW567

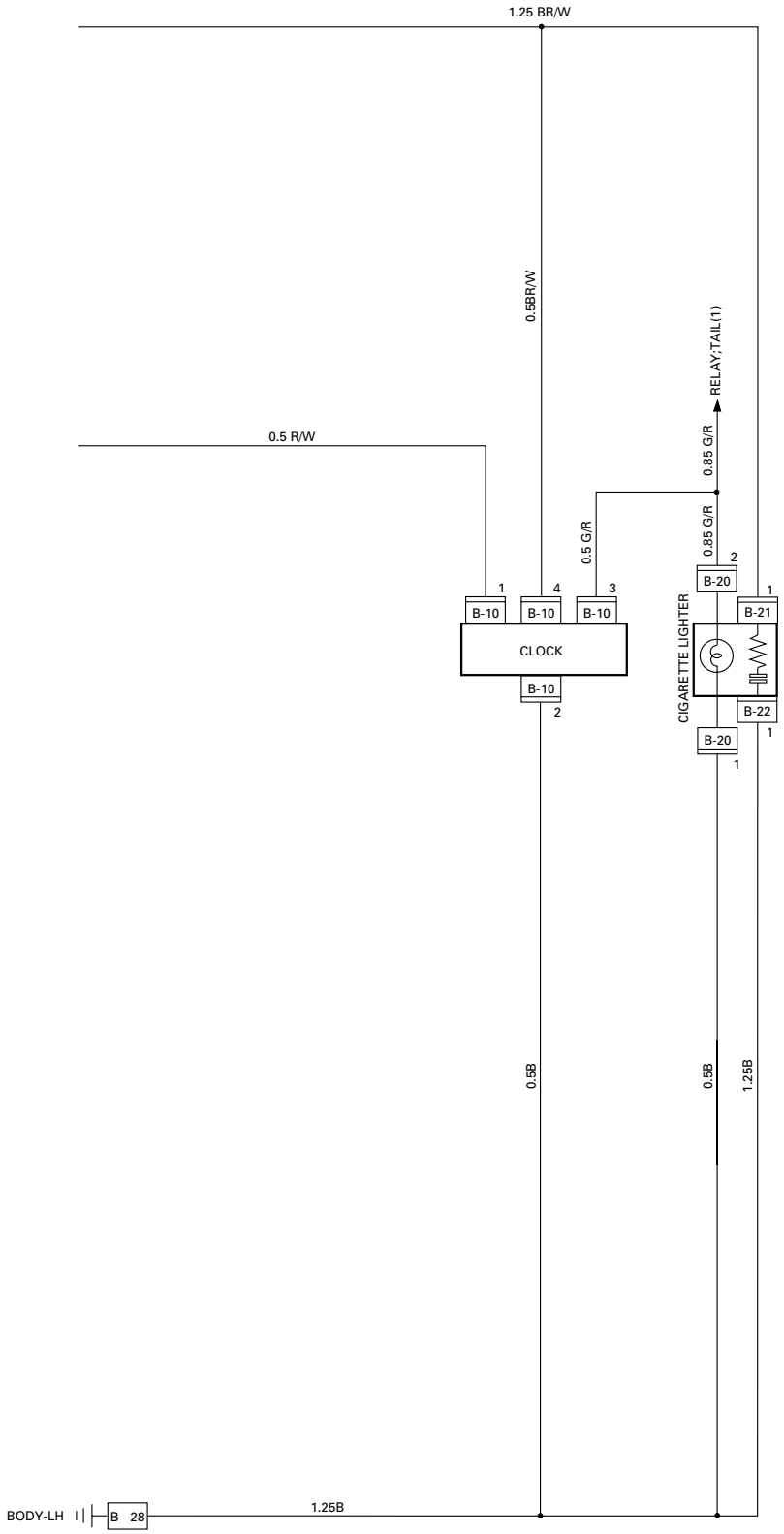
1.25 BR/W
0.5BR/W
RELAY;TAIL(1)
0.5 R/W
0.85 G/R
0.5 G/R
0.85 G/R
B-20
B-10
B-10
B-10
B-21
CLOCK
CIGARETTE LIGHTER
B-10
B-22
B-20
0.5B
0.5B
1.25B
BODY-LH
B - 28
1.25B

D08RV979

CIRCUIT DIAGRAM (RHD)

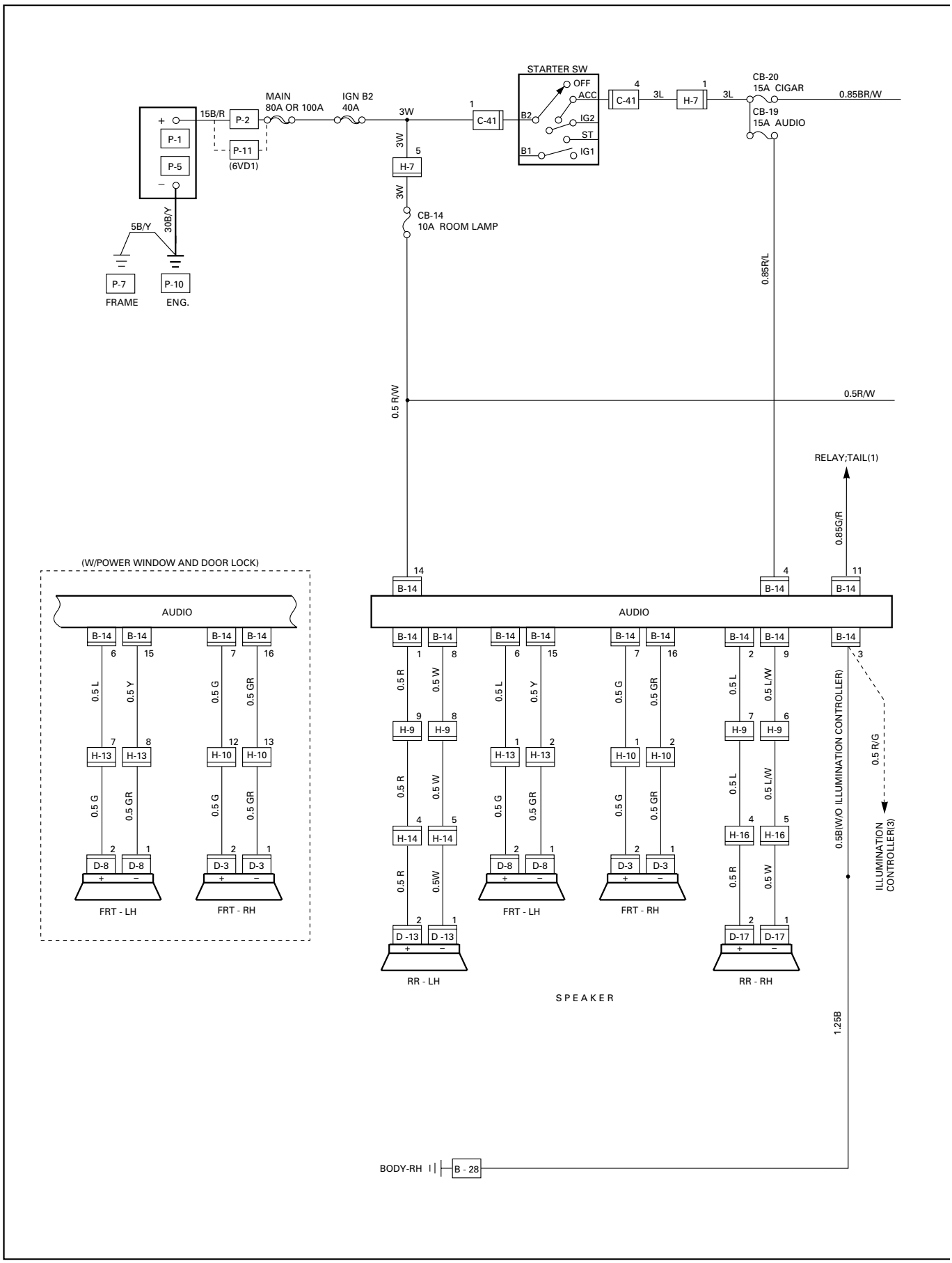

D08RW568

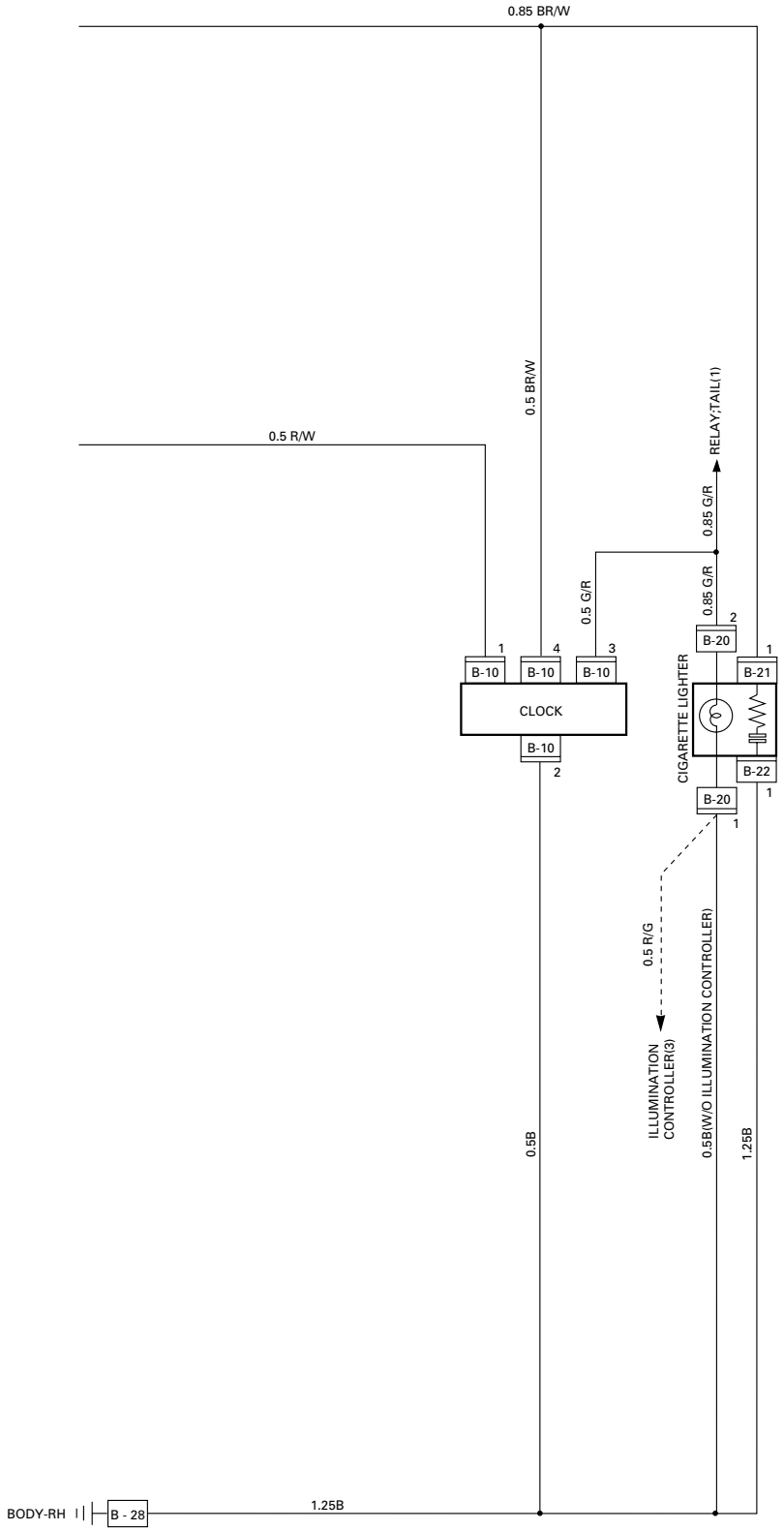
0.85 BR/W
0.5 BR/W
0.5 R/W
RELAY;TAIL(1)
0.85 G/R
0.85 G/R
0.5 G/R
B-10
B-10
B-10
B-10
CLOCK
B-20
B-21
B-22
B-20
CIGARETTE LIGHTER
0.5 R/G
ILLUMINATION CONTROLLER(3)
0.5B(W/O ILLUMINATION CONTROLLER)
0.5B
1.25B
BODY-RH
B - 28
1.25B

D08RV981

TROUBLE SHOOTING

CIGARETTE LIGHTER

1. Lighter does not pop out after being pushed in. It does not become hot.

Checkpoint		Trouble Cause	Countermeasure
Audio system (System should receive power)	NG	Poor Fuse No. CB-20 (15A, Fuse box) contact or blown	Reinstall or replace the fuse No. CB-20 (15A)
OK			
Lighter continuity between center part and outer area	NG	Open circuit or poor connector contact	Replace the lighter
OK			
Voltage between connector 1 B-21 and the ground at starter SW. is ACC position (Should be battery voltage present)	NG	Open circuit or poor connector contact	Repair open circuit or connector contact
OK			
Continuity between connector 1 B-22 and the ground	NG	Open circuit or poor connector contact	Repair open circuit or connector contact

2. Lighter pops out prematurely before becoming hot

Lighter and casing	NG	Deformed lighter or casing	Repair or replace the lighter and/or casing

3. Lighter becomes too hot

Lighter and casing	NG	Deformed lighter and casing	Repair or replace the lighter and/or casing

REMOVAL AND INSTALLATION

AUDIO

Refer to Section 9 “ACCESSORIES” for details.

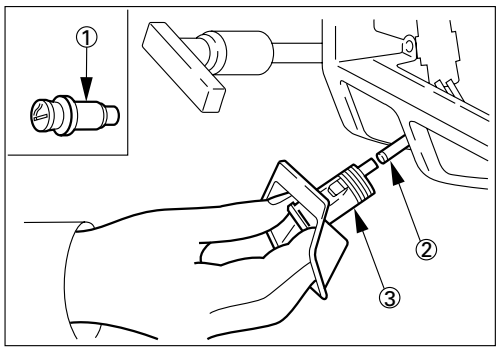

D08RV882

CIGARETTE LIGHTER

Removal

1. Remove the lighter ①.
2. Disconnect the connector ②.
3. Loosen the lighter holder ③ nut at the back side.
4. Remove the holder from the bezel.

Installation

Follow the removal procedure in the reverse order to install the lighter.

Pay close attention to the important points mentioned in the following paragraphs.

Connector

Be absolutely sure that the lighter connector is securely connected.

This will prevent a poor contact and an open circuit.

POWER DOOR MIRROR

PARTS LOCATION (LHD)

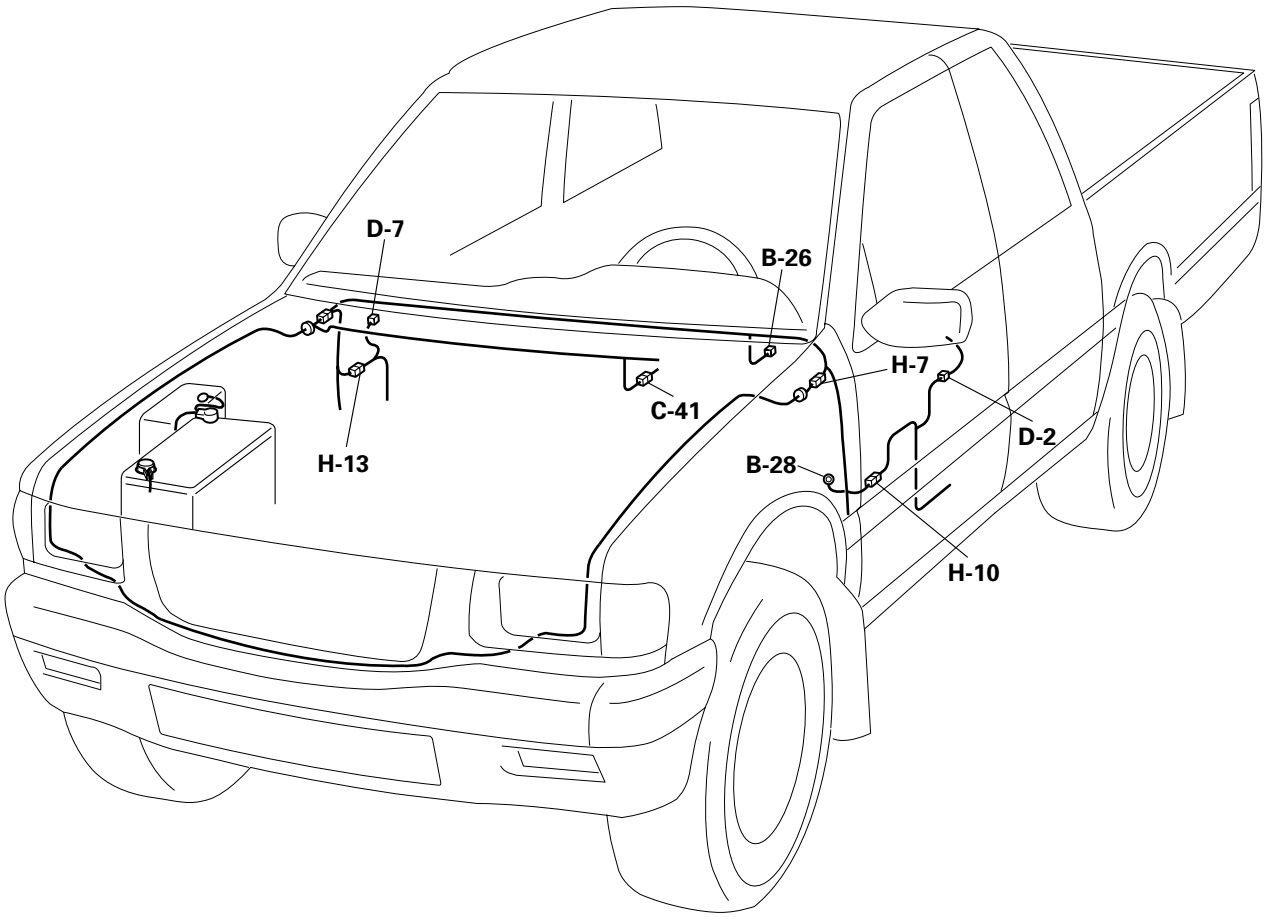

D08RVA51

PARTS LOCATION (RHD)

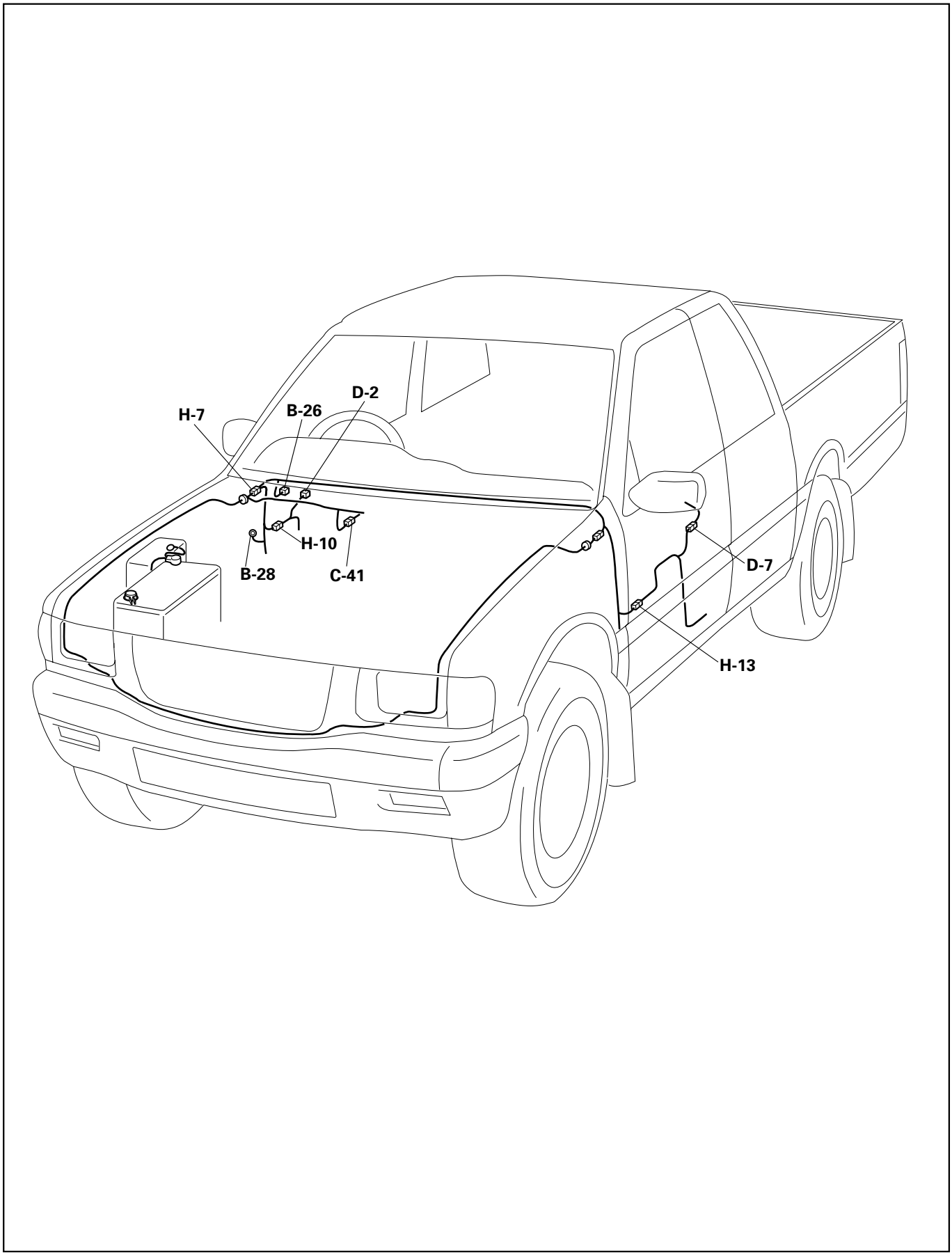

D08RVA49

CIRCUIT DIAGRAM (LHD)

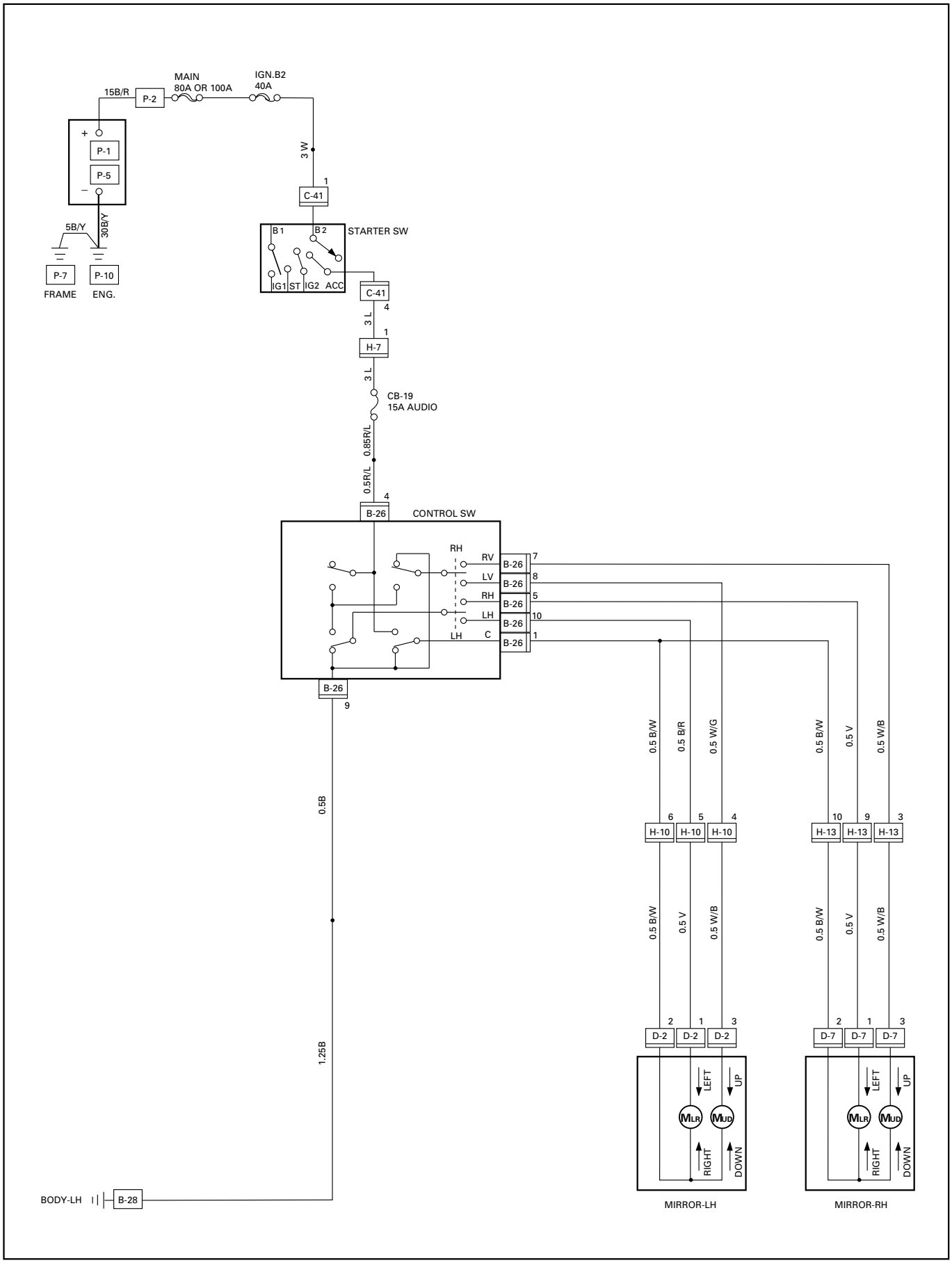

D08RV777

CIRCUIT DIAGRAM (RHD)

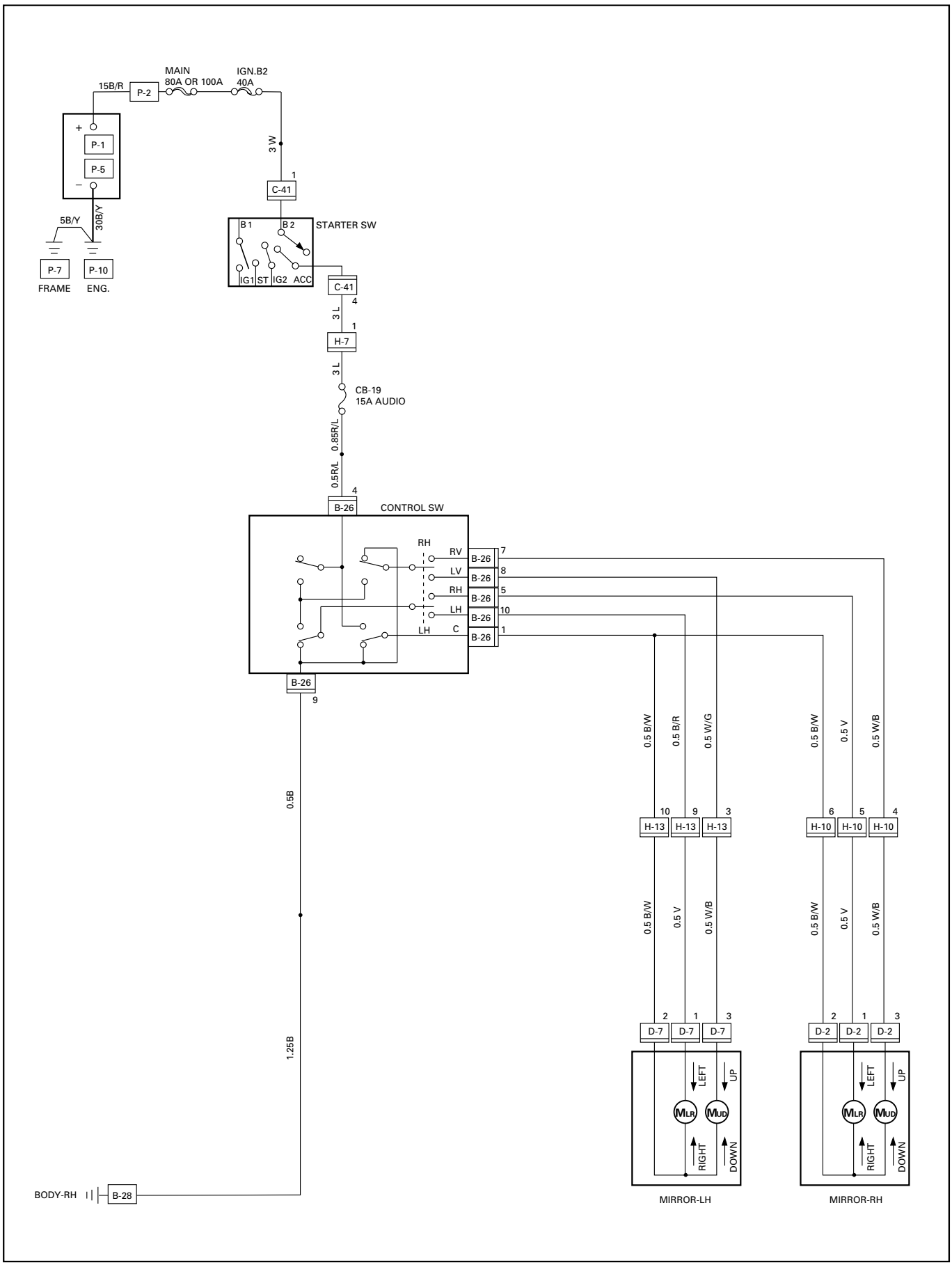

D08RV778

TROUBLE SHOOTING

QUICK CHART FOR CHECK POINTS

Check Points / Trouble Mode	Fuse	Door Mirror Control Switch	Door Mirror		Cable Harness
	CB-19 (15A)		LH	RH	
1. Mirrors on the both sides do not operate	○	○			○
2. Mirror on the left (or right) side does not operate		○	○	○	○
3. Mirrors on the both sides operate only in the vertical (or horizontal) direction		○			
4. Mirror on the left side operates only in the vertical (or horizontal) direction		○	○		○
5. Mirror on the right side operates only in the vertical (or horizontal) direction		○		○	○

TROUBLE SHOOTING

DOOR MIRROR CONTROL SWITCH

1. Mirrors on the both sides do not operate

Checkpoint		Trouble Cause	Countermeasure
Fuse No. CB-19 (15A, Fuse box)	NG	Poor fuse contact or blown	Reinstall or replace the fuse No. CB-19 (15A)
OK			
Grounding point (B-28)	NG	Poor grounding point contact	Repair grounding point (B-28) contact
OK			
Voltage between the door mirror control SW. harness side connector terminal 4 B-26 and the ground (Should be battery voltage present)	NG	Open circuit or poor connector contact	Repair an open circuit or a poor connection of the connectors between the fuse No. CB-19 (15A) and 4 B-26
OK			
Continuity between the door mirror control SW. harness side connector terminal 9 B-26 and B-28	NG	Open circuit or poor connector contact	Repair open circuit or connector contact
OK			
Door mirror control SW. function	NG	SW. malfunction	Replace the door mirror control SW.
OK			
Continuity between 1 B-26 and 10 H-13 (or 6 H-10)	NG	Open circuit or poor connector contact	Repair open circuit or connector contact

2. Mirror on the left (or right) side does not operate

Checkpoint		Trouble Cause	Countermeasure
Door mirror control SW. function	NG	SW. malfunction	Replace the door mirror control SW.
OK			
Mirror function on the left (or right) side	NG	Mirror malfunction on the left (or right) side	Repair or replace the door mirror
OK			
Continuity between [LHD] 1 B-26 and 2 D-2 (1 B-26 and 2 D-7) [RHD] 1 B-26 and 2 D-7 (1 B-26 and 2 D-2)	NG	Open circuit or poor connector contact	Repair open circuit or connector contact

3. Mirrors on the both sides operate only in the vertical (or horizontal) direction

Door mirror control SW. function	NG	SW. malfunction	Replace the door mirror control SW.

4. Mirror on th left side operates only in the vertical (or horizontal) direction

Door mirror control SW. function	NG	SW. malfunction	Replace the door mirror control SW.
OK			
Door mirror function	NG	Door mirror malfunction	Repair or replace the door mirror
OK			
Continuity between [LHD] 8 B-26 and 3 D-2 (10 B-26 and 1 D-2) [RHD] 8 B-26 and 3 D-7 (10 B-26 and 1 D-7)	NG	Open circuit or poor connector contact	Repair open circuit or connector contact

5. Mirror on the right side operates only in the vertical (or horizontal) direction

Checkpoint		Trouble Cause		Countermeasure
Door mirror control SW. function	NG	Door mirror control malfunction		Replace the door mirror control SW.
OK				
Door mirror function	NG	Door mirror malfunction		Repair or replace the door mirror
OK				
Continuity between [LHD] 7 B-26 and 3 D-7 (5 B-26 and 1 D-7) [RHD] 7 B-26 and 3 D-2 (5 B-26 and 1 D-2)	NG	Open circuit or poor connector contact		Repair open circuit or connector contact

REMOVAL AND INSTALLATION

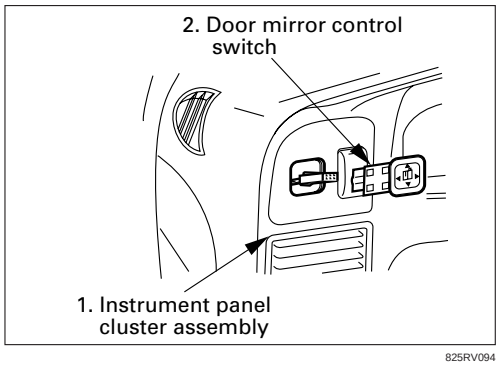

DOOR MIRROR CONTROL SWITCH

Removal

1. **Instrument Panel Cluster Assembly**
   - Refer to section 10 “BODY” for instrument panel cluster assembly removal steps.
2. **Door Mirror Control Switch**
   - Disconnect the switch connector.
   - To remove the switch, push the lock from the back side of the cluster assembly.

Installation

To install, follow the removal steps in the reverse order.

DOOR MIRROR

Removal and Installation

Refer to the DOOR MIRROR in section 10 “BODY”.

INSPECTION AND REPAIR

B-26

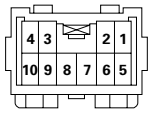

Switch side

Door Mirror Control Switch

1. **Switch Side Connector Circuit**

   Check continuity between the switch connector terminals while operating the door mirror control switch as shown in the following table.

Switch position \ Connector No.		4	9	1	8	10	7	5
Door mirror (RH)	△ (Up)	○	○	○			○	○
	▽ (Down)	○	○	○			○	
	◁ (Left)	○	○	○			○	○
	▷ (Right)	○	○	○				○
Door mirror (LH)	△ (Up)	○	○	○	○	○		
	▽ (Down)	○	○	○	○			
	◁ (Left)	○	○	○	○	○		
	▷ (Right)	○	○	○		○		

B-26

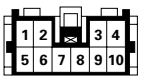

Harness side

2. **Harness Side Connector Circuit**

   Remove the connector No. B-26 of the mirror control switch and check voltage and continuity of the harness side connector.

   - When there is no continuity at the terminal No. 5, 7, 8 and 10, it is considered that the circuit with terminal No. 1 (B/W) is defective.

- When there is no continuity at either one of the circuit No. 5, 7, 8, or 10, the motor in the mirror of the circuit or the circuit itself is defective.

Terminal No.	Wire color	Connecting to	Check item	Connecting terminal	Check condition	Standard
1	B/W	LH mirror & RH mirror	Continuity	1-Ground	—	No continuity
4	R/L	Fuse CB-19 (15A)	Voltage	4-Ground	Starter SW "ACC" position	Approx. 12V
5	V	RH mirror-LH/RH	Continuity	5 – 1	—	Continuity
7	W/B	RH mirror-Up/Down		7 – 1	—	
8	W/G	LH mirror-Up/Down		8 – 1	—	
9	B	Ground		9-Ground	—	
10	B/R	LH mirror-LH/RH		10 – 1	—	

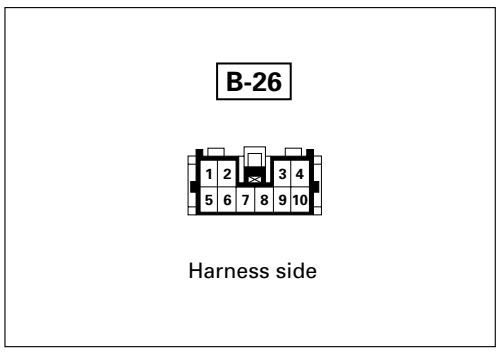

Door Mirror

1. **Door Mirror Control Switch Connector Circuit**

   Disconnect the switch connector (B-26), apply the battery voltage to the harness side connector terminals and check its function.

Mirror \ Connector No. / Terminal No.	B-26					Operating direction
	10	5	1	8	7	
Right		⊕	⊖			Left
		⊖	⊕			Right
			⊖		⊕	Up
			⊕		⊖	Down
Left	⊕		⊖			Left
	⊖		⊕			Right
			⊖	⊕		Up
			⊕	⊖		Down

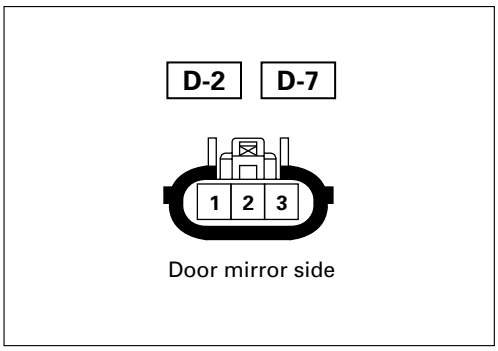

2. Door Mirror Connector Circuit

Disconnect the door mirror connector, apply the battery voltage to the door mirror side connector (D-2 and D-7) terminals and check its function.

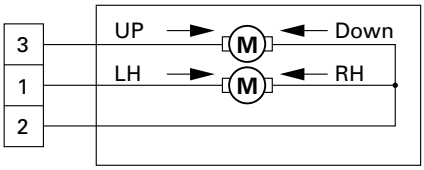

825RV093

Connector No. / Terminal No. / Operation	D-2	D-7	
	1	2	3
Up		⊖	⊕
Down		⊕	⊖
Left	⊕	⊖	
Right	⊖	⊕	

REAR DEFOGGER

PARTS LOCATION (LHD)

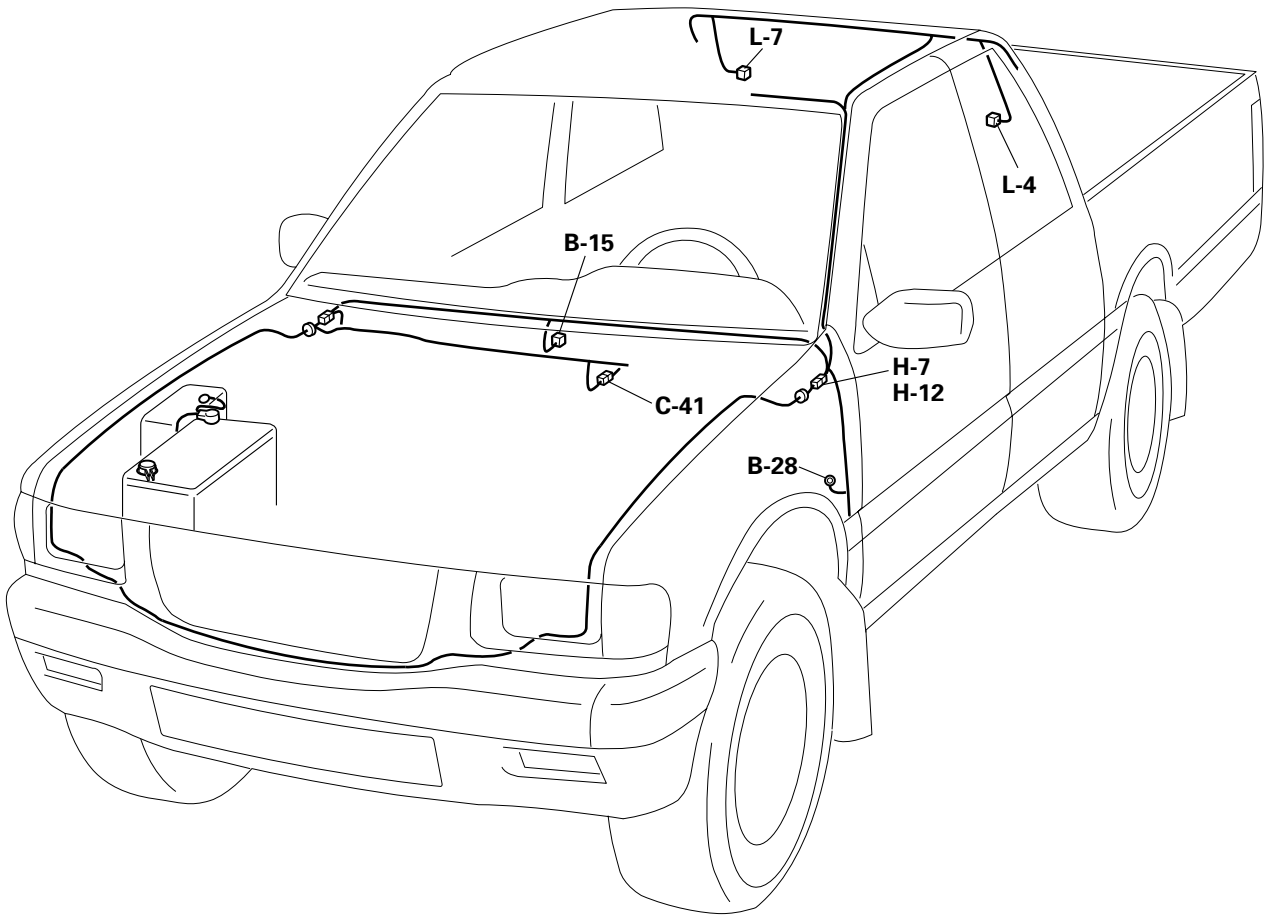

D08RVA46

PARTS LOCATION (RHD)

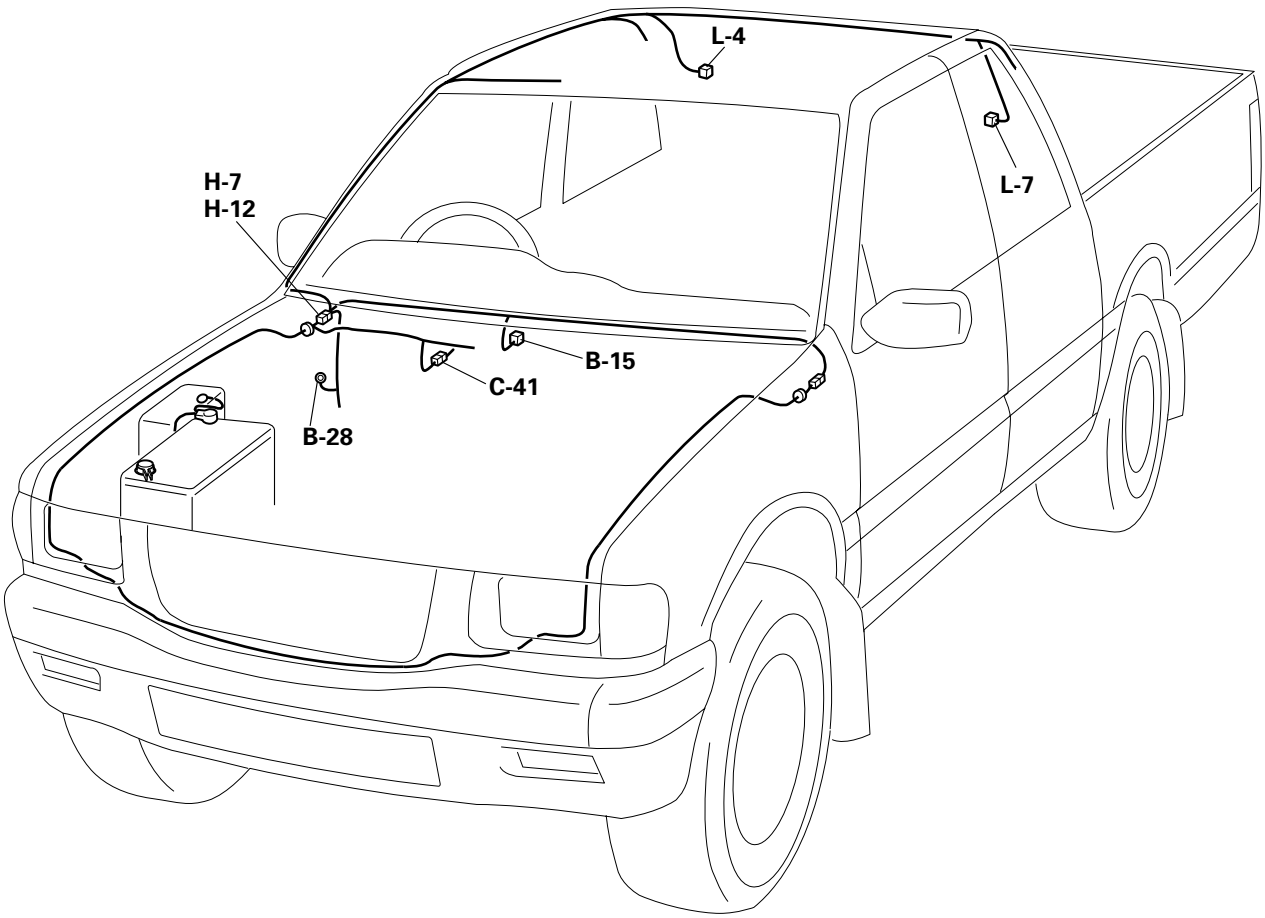

D08RVA47

CIRCUIT DIAGRAM (LHD)

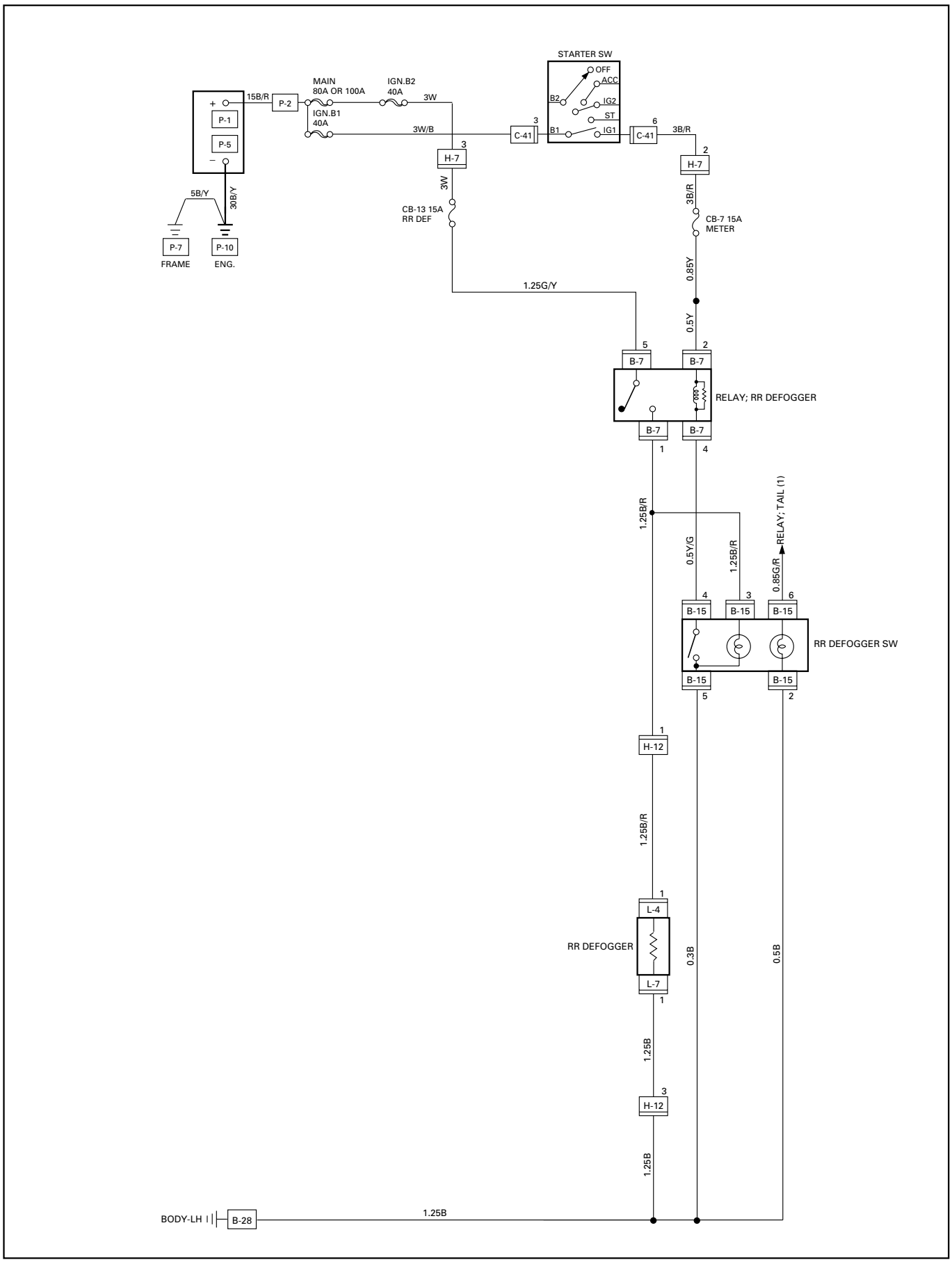

D08RV975

CIRCUIT DIAGRAM (RHD)

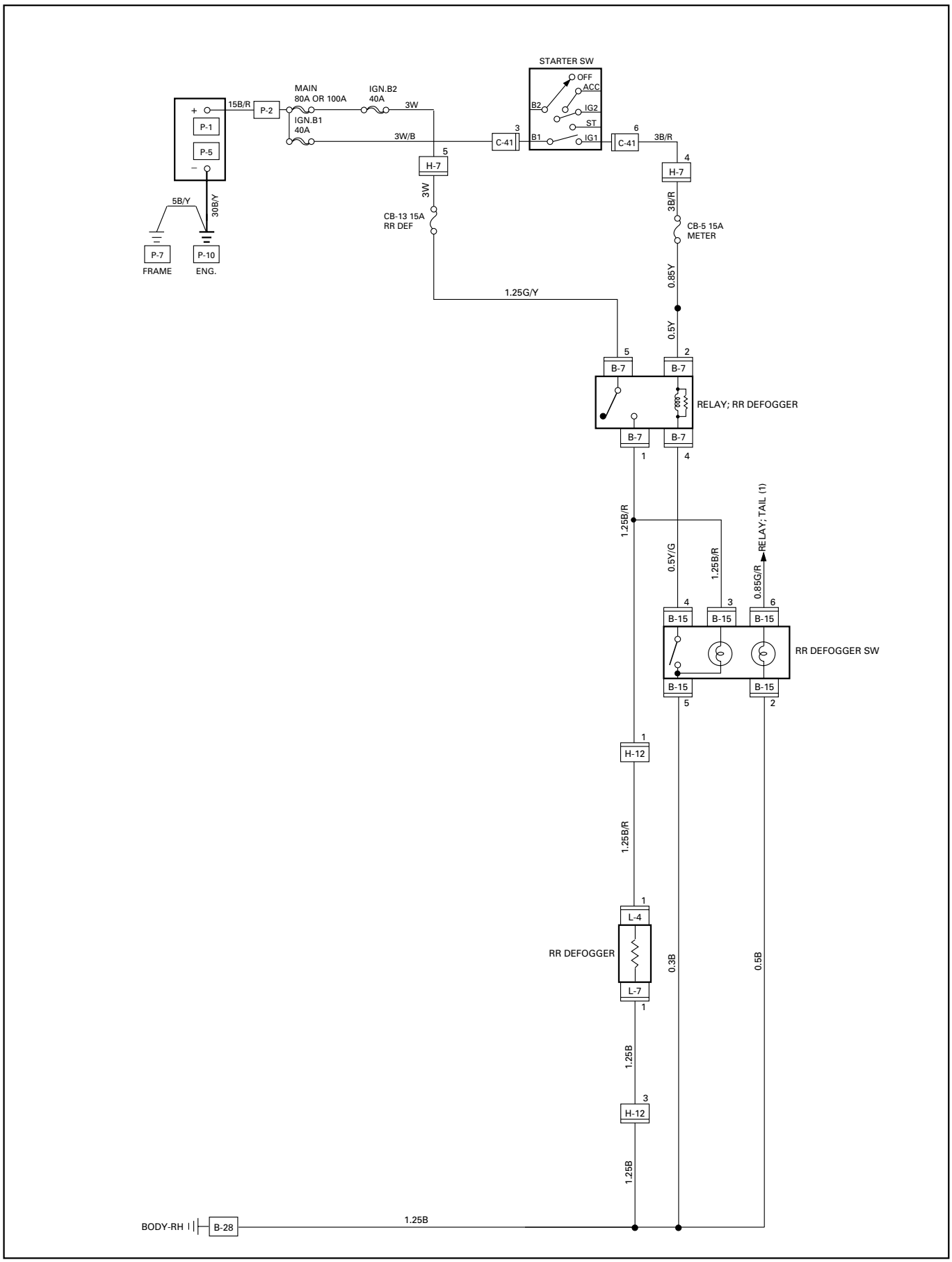

D08RV974

TROUBLE SHOOTING

Rear defogger inoperative

Checkpoint		Trouble Cause	Countermeasure
LHD: Fuse No. CB-7 (15A, Fuse box) RHD: Fuse No. CB-5 (15A, Fuse box)	NG	Poor fuse contact or blown	Reinstall or replace the fuse No. CB-7 (15A) (RHD: fuse No. CB-5 (15A))
OK			
Fuse No. CB-13 (15A, Fuse box)	NG	Poor fuse contact or blown	Reinstall or replace the fuse No. CB-13 (15A)
OK			
Rear defogger switch function	NG	Switch malfunction	Replace the rear defogger switch
OK			
Rear defogger relay function	NG	Relay malfunction	Replace the rear defogger relay
OK			
Grounding point (B-28)	NG	Poor grounding point contact	Repair grounding point (B-28) contact
OK			
Voltage between 1 L-4 - ground when the starter switch and the rear defogger switch are at on position (should be battery voltage present)	NG	Open circuit or poor connector contact	Repair open circuit or poor connector contact between fuse No. CB-7 (15A) (RHD: fuse No. CB-5 (15A)) and 2 B-7 , fuse No. CB-13 (15A) and 5 B-7 , 1 B-7 and 1 L-4 , 4 B-7 and 4 B-15 or 5 B-15 and B-28

Continued on the next page

Checkpoint		Trouble Cause		Countermeasure
Continued from the previous page				
OK				
Continuity between 1 L-7 and B-28	NG	Open circuit or poor connector contact	—	Repair open circuit or connector contact between 1 L-7 and B-28
OK				
Continuity between rear defogger terminals	NG	Broken heat wire of rear defogger	—	Repair heat wire

REMOVAL AND INSTALLATION

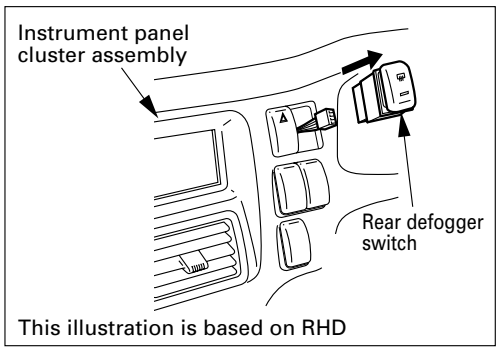

825RV095

REAR DEFOGGER SWITCH

Removal

1. **Instrument Panel Cluster Assembly**
   - Refer to Section 10 “BODY” for instrument panel cluster assembly removal steps.
2. **Rear Defogger Switch**
   - Disconnect the switch connector.
   - To remove the switch, push the lock from the back side of the cluster assembly.

Installation

Follow the removal procedure in the reverse order to install the rear defogger switch.

INSPECTION AND REPAIR

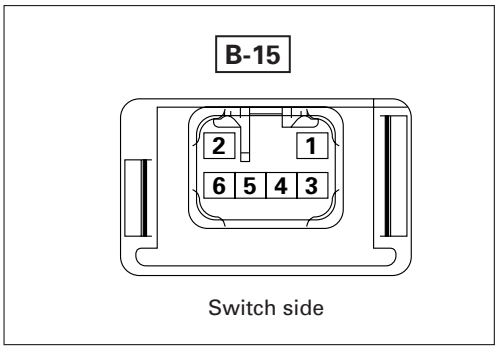

825RV095

REAR DEFOGGER SWITCH

Rear Defogger Switch Connections

Terminal No. / SW position	3	5	4	6	2
ON					
OFF					

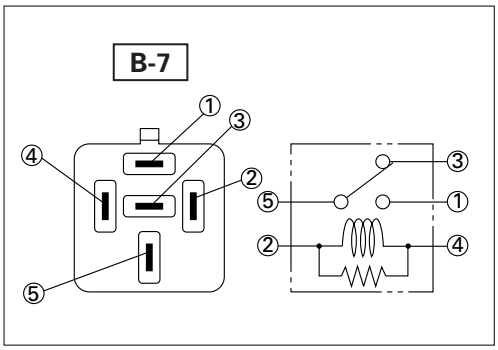

060RV005

REAR DEFOGGER RELAY

Check continuity between the relay terminals.

① - ⑤ . . . . . No continuity

(When battery voltage is applied between ② and ④)

① - ⑤ . . . . . Continuity

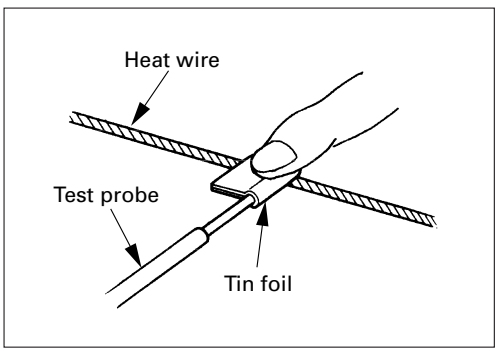

825RV102

INSPECTION OF REAR DEFOGGER HEAT WIRE

- Heat wires are printed on the inner side of glass. To clean, use a soft cloth and wipe horizontally along the wires.
- Never use glass cleaner or equivalent.
- When measuring voltage, wind a piece of tin foil around the tip of the negative probe and press the foil against the wire with your finger as shown.

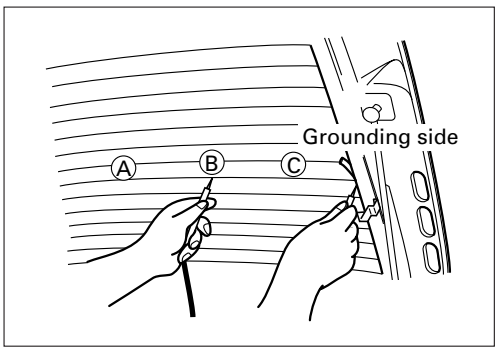

825RV103

(1) Turn the ignition switch on.

(2) Turn the defogger switch on.

(3) Measure the voltage between the three points on the heat wire and the (–) terminal with a voltmeter.

(4) Check that the voltage becomes smaller from Ⓐ to Ⓑ to Ⓒ.

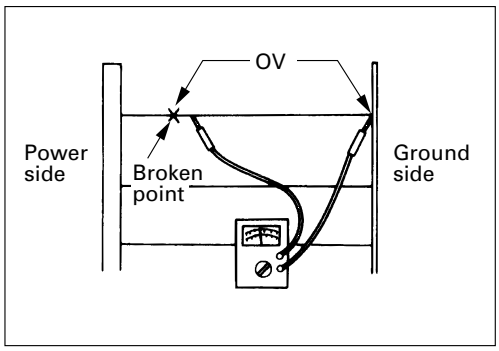

825RV101

(5) If there is a place where the voltage suddenly changes to 0V, there is a broken wire between there and the power side.

(6) Move the tester probe from the position where the voltage changes to 0V toward the power side and find where the voltage suddenly increases.

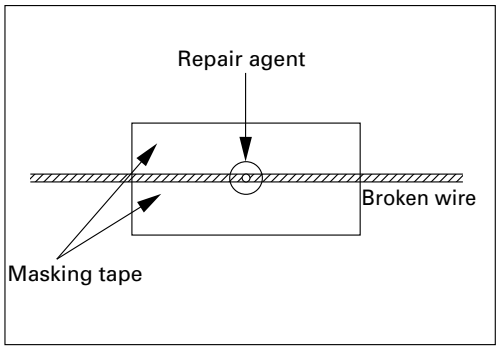

825RV099

REPAIR OF BROKEN HEAT WIRE

(1) Clean broken wire tips with white gasoline.

(2) Place masking tape along both sides of wire to be repaired.

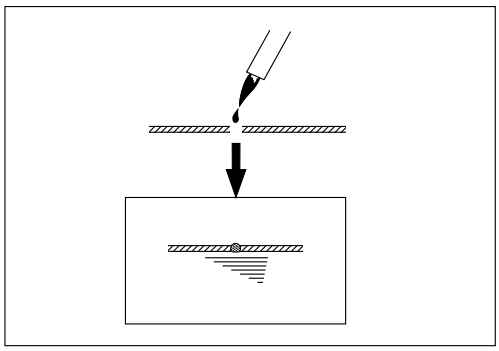

825RV100

(3) Thoroughly mix the repair agent (Dupont paste No. 4817 or equivalent).

(4) Using a fine tip brush, apply a small amount to the wire.

(5) After a couple of minutes, remove the masking tape.

(6) Allow to stand at least 24 hours.

RADIATOR LEVEL CONTROL WARNING SYSTEM

PARTS LOCATION (LHD ONLY)

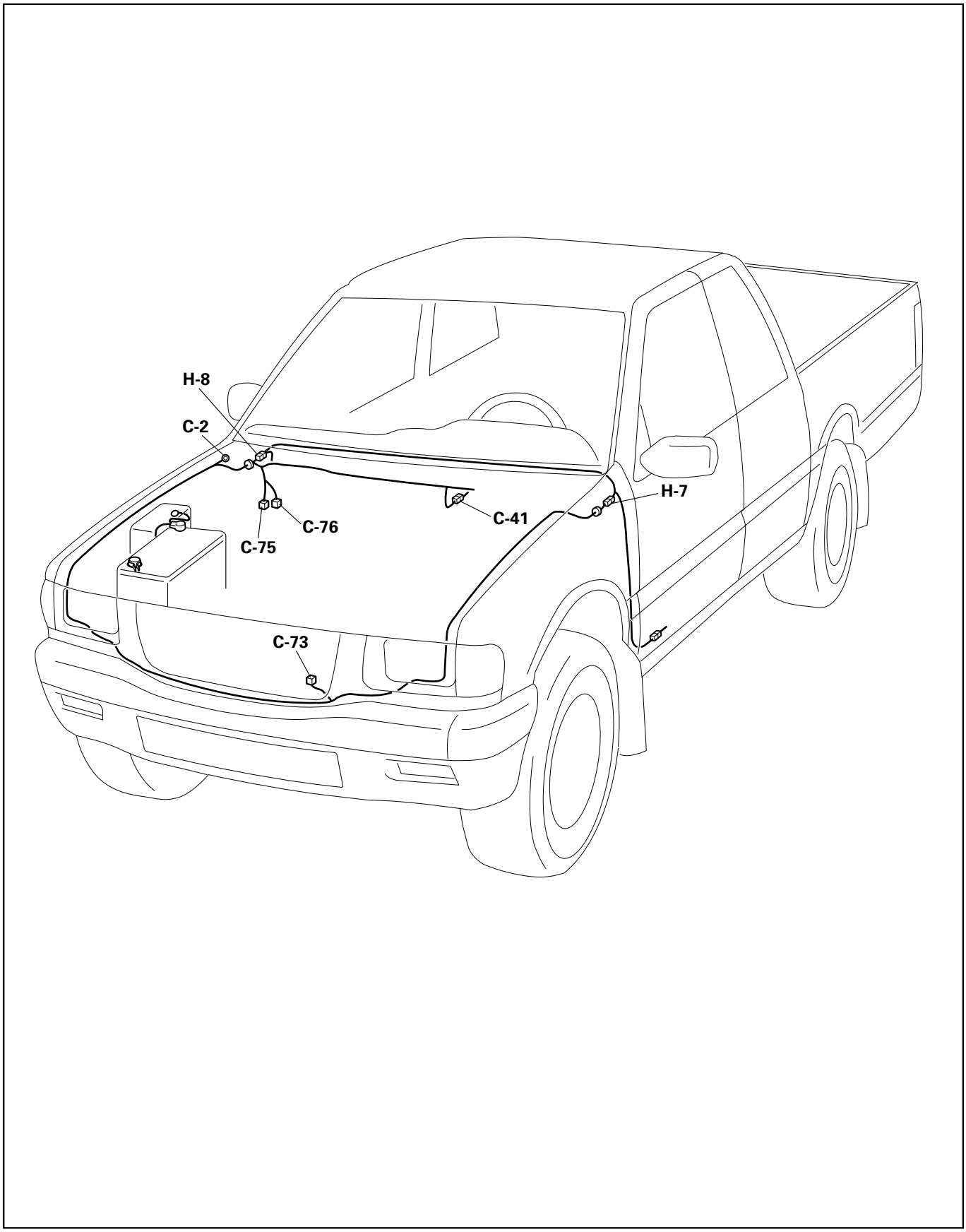

D08RVA44

CIRCUIT DIAGRAM

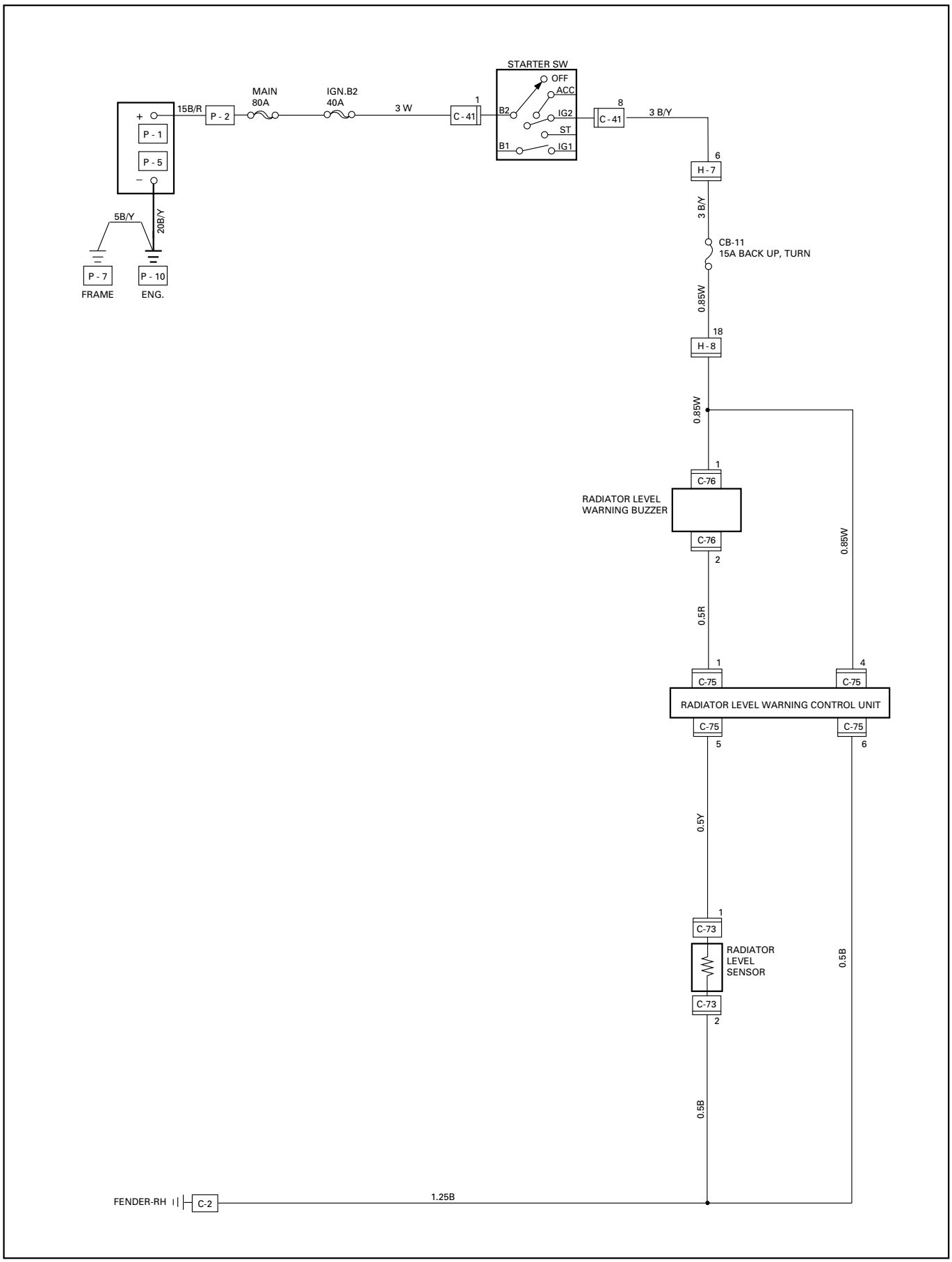

D08RV973

MEMO

CONNECTOR LIST

No.	Connector face	No.	Connector face
B-1	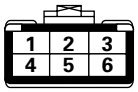	B-11	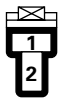 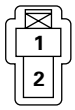
B-2	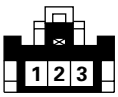	B-12	
B-3	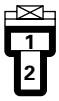 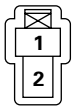	B-13	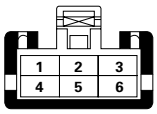
B-4	NOT USED	B-14	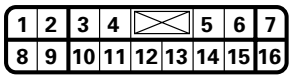
B-5		B-15	
B-6	NOT USED	B-16	
B-7		B-17	NOT USED
B-8	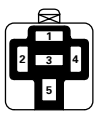	B-18	NOT USED
B-9	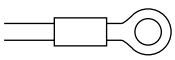	B-19	
B-10	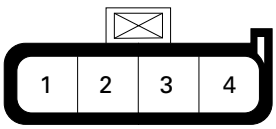	B-20	

No.	Connector face	No.	Connector face
B-21		B-31	—
B-22		B-32	NOT USED
B-23	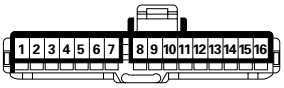	B-33	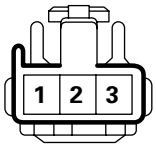
B-24	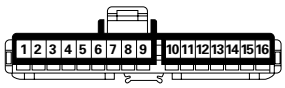	B-34	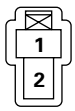
B-25	NOT USED	B-35	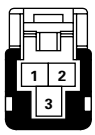
B-26	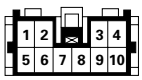 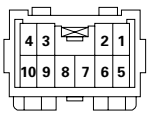	B-36	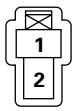
B-27	NOT USED	B-37	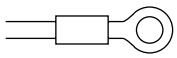
B-28	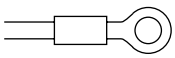		
B-29	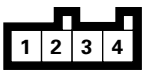		
B-30	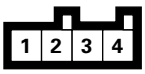		

No.	Connector face	No.	Connector face
C-1	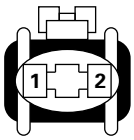	C-11	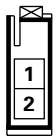
C-2	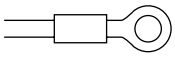	C-12	NOT USED
C-3	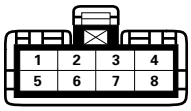	C-13	NOT USED
C-4	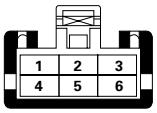	C-14	NOT USED
C-5		C-15	
C-6		C-16	NOT USED
C-7		C-17	
C-8	NOT USED	C-18	
C-9	NOT USED	C-19	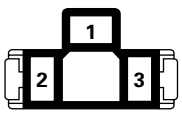
C-10	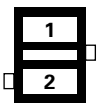	C-20	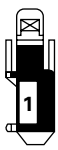

No.	Connector face	No.	Connector face
C-21	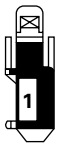	C-37	
C-22	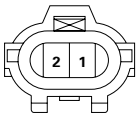 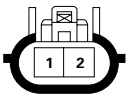	C-38	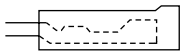
C-23	NOT USED	C-39 (LHD)	
C-24		C-39 (RHD)	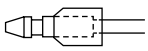
C-25	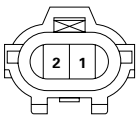	C-40	
C-26	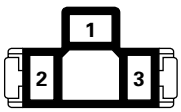	C-41	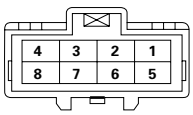 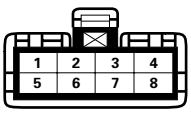
C-27		C-42	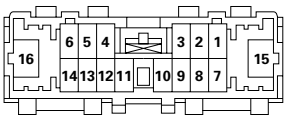 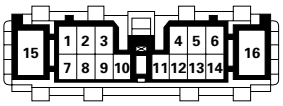
C-28 ~ C-34	NOT USED	C-43	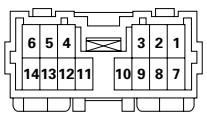 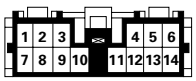
C-35	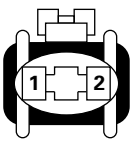	C-44	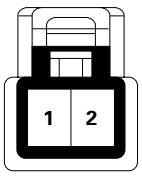
C-36	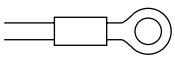	C-45	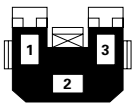

No.	Connector face	No.	Connector face
C-46	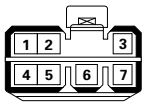	C-52	
C-47	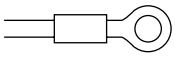 (GASOLINE)	C-53 ~ C-57	NOT USED
C-47	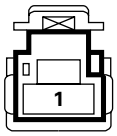 (DIESEL)	C-58	
C-48	(GASOLINE)	C-59	NOT USED
C-48	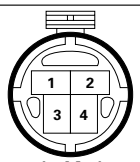 (4JA1)	C-60	
C-48	(4JA1 FOR SOUTH AFRICA)	C-60	(CHINA)
C-48	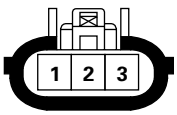 (4JB1)	C-61	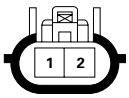
C-49	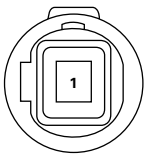	C-62	
C-50	NOT USED	C-63	NOT USED
C-51	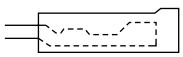 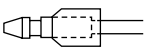	C-64	NOT USED

No.	Connector face	No.	Connector face
C-65	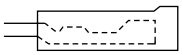	C-74	
C-66	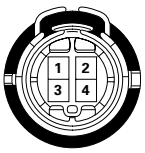	C-75	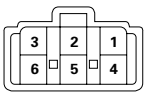
C-66	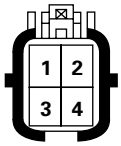 (CHINA) 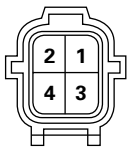	C-76	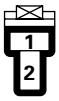
C-67	NOT USED	C-77	
C-68		C-78	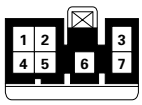
C-69	NOT USED	C-78	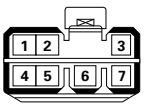 (4ZD1 WITH CATALYSIS CONTROL)
C-70	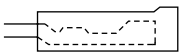	C-79	
C-71		C-80	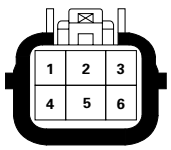 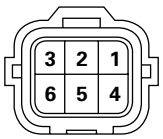
C-72		C-81	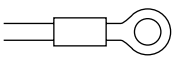
C-73		C-82	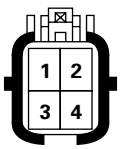 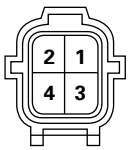

No.	Connector face	No.	Connector face
C-83	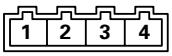	C-93	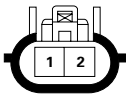
C-84	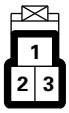	C-94	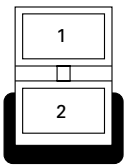
C-85	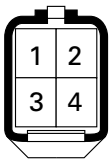 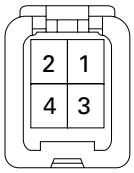	C-95	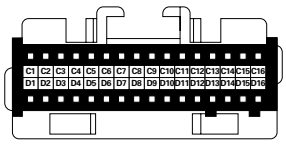
C-86		C-96	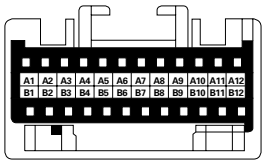
C-87		C-97	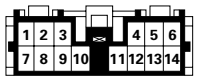
C-88	**NOT USED**	C-98	
C-89	**NOT USED**	C-99	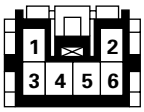
C-90	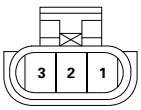	C-100	
C-91		C-101	
C-92		C-102	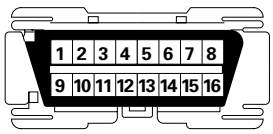

No.	Connector face	No.	Connector face
C-103			

No.	Connector face	No.	Connector face
D-1		D-11	
D-2		D-12	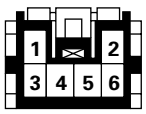
D-3	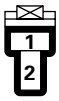	D-13	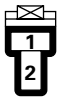
D-4		D-14	
D-5	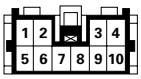	D-15	
D-6		D-16	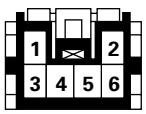
D-7		D-17	
D-8		D-18	
D-9	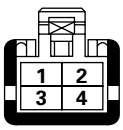		
D-10	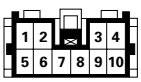		

No.	Connector face	No.	Connector face
E-1	(DIESEL)	E-10	
E-1	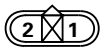 (GASOLINE WITH MPI)	E-11	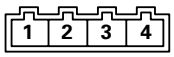
E-2	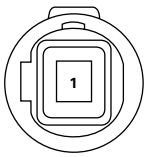	E-12	
E-3	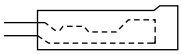 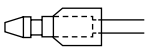	E-13	
E-4		E-14	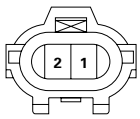
E-5	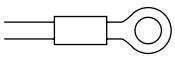	E-15	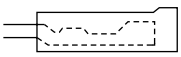 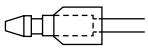
E-6		E-16	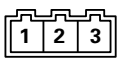
E-7		E-17	NOT USED
E-8		E-18	NOT USED
E-9		E-19	

No.	Connector face	No.	Connector face
E-20 ~ E-35	NOT USED	E-47	NOT USED
E-36		E-48	NOT USED
E-37		E-49	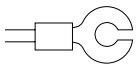
E-38 ~ E-40	NOT USED	E-50	
E-41	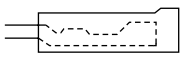	E-51	
E-42		E-52	
E-43		E-53	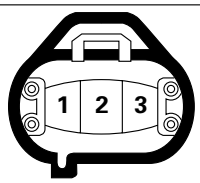
E-44		E-54	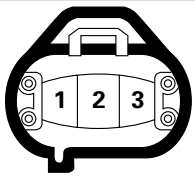
E-45		E-55	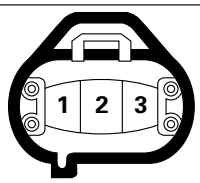
E-46		E-56	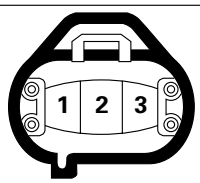

No.	Connector face	No.	Connector face
E-57	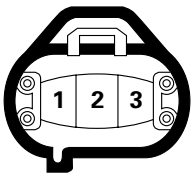	E-67	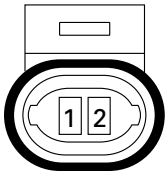
E-58	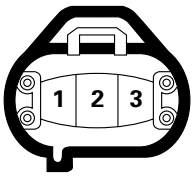	E-68	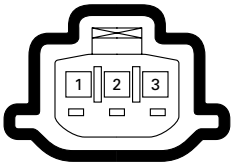
E-59	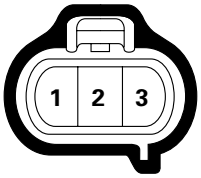	E-69	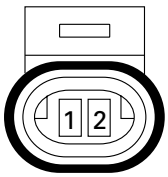
E-60	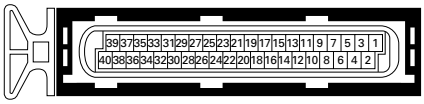	E-70	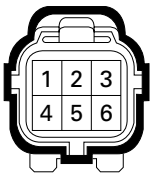
E-61	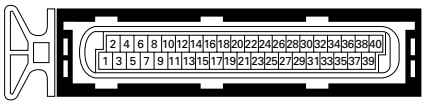	E-71	
E-62		E-72	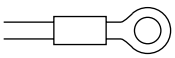
E-63	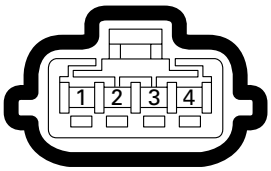	E-73	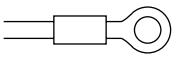
E-64		E-74	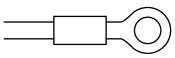
E-65			
E-66	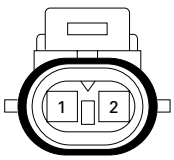		

No.	Connector face	No.	Connector face
F-1			
F-2			
F-3	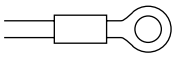		

No.	Connector face	No.	Connector face
H-1		H-8 (LHD)	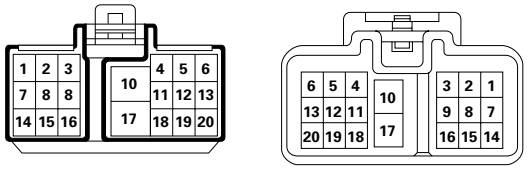
H-2		H-8 (RHD)	
H-3	**NOT USED**	H-9	
H-4	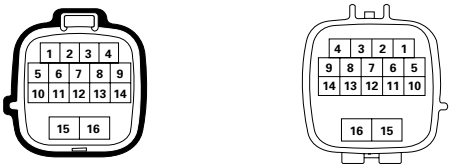	H-10	(WITHOUT POWER WINDOW AND POWER DOOR LOCK)
H-5	(4ZC1 AND 4ZD1)	H-10	(WITH POWER WINDOW AND POWER DOOR LOCK)
H-5	(4ZD1 FOR SAUDI ARABIA)	H-11	
H-5	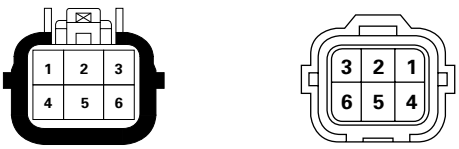 (4ZE1)	H-12	
H-6	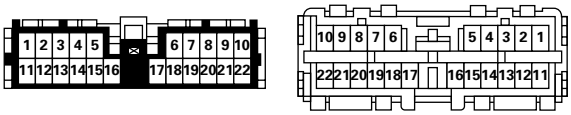	H-13	(WITHOUT POWER WINDOW AND POWER DOOR LOCK)
H-7 (LHD)		H-13	(WITH POWER WINDOW AND POWER DOOR LOCK)
H-7 (RHD)	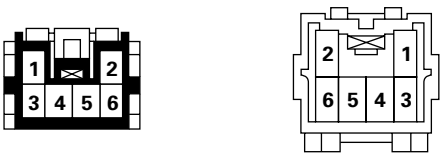	H-14	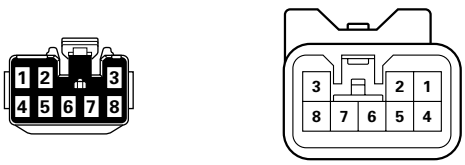

No.	Connector face	No.	Connector face
H-15		H-25	
H-16	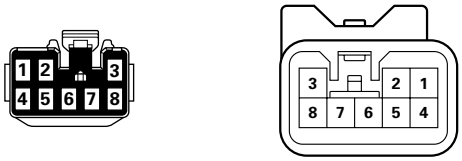	H-26	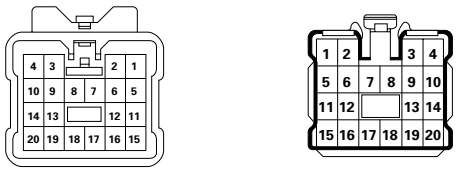
H-17	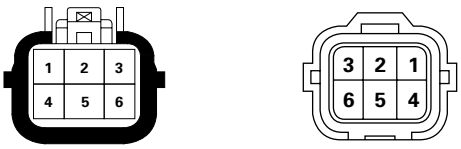	H-27	
H-18		H-28	
H-19	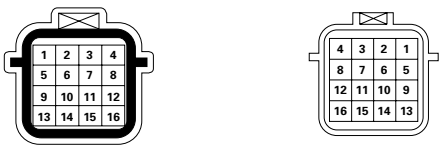	H-29	**NOT USED**
H-20	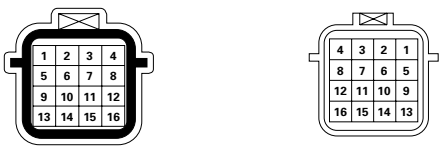	H-30	
H-21		H-31	
H-23	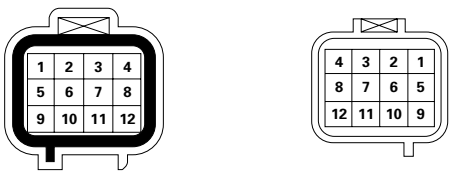	H-32	
H-23		H-33	
H-24		H-34	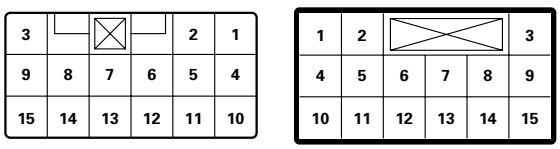

No.	Connector face	No.	Connector face
H-35	**NOT USED**		
H-36			
H-37	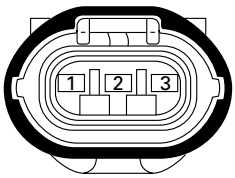		
H-38			

No.	Connector face	No.	Connector face
L-1			
L-2			
L-3			
L-4			
L-5			
L-6			
L-7			
L-8			
L-9			

No.	Connector face	No.	Connector face
M-1		M-11	
M-2		M-12	
M-3		M-13	
M-4		M-14	
M-5	NOT USED	M-15	
M-6	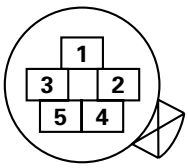	M-16	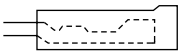
M-7	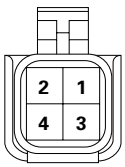	M-17	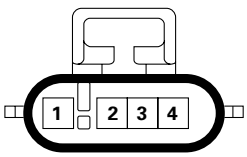
M-8		M-18 ~ M-24	NOT USED
M-9		M-25	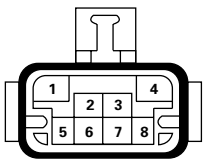
M-10	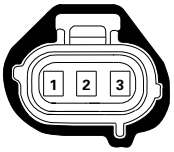		

No.	Connector face	No.	Connector face
P-1	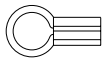	P-9	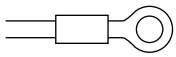
P-2	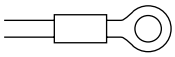	P-10	
P-3	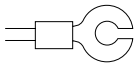 (DIESEL)	P-11	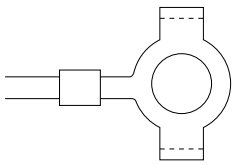
P-3	(GASOLINE)	P-12	
P-4	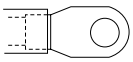 (DIESEL)		
P-4	(GASOLINE)		
P-5	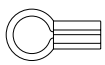		
P-6	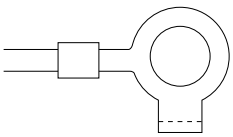		
P-7	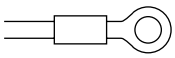		
P-8	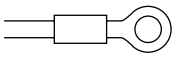		

No.	Connector face	No.	Connector face
R-1	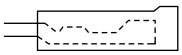		
R-2	NOT USED		
R-3	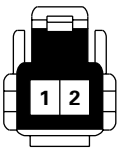		
R-4			
R-5	NOT USED		
R-6	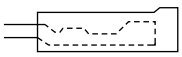		

No.	Connector face	No.	Connector face
T-1	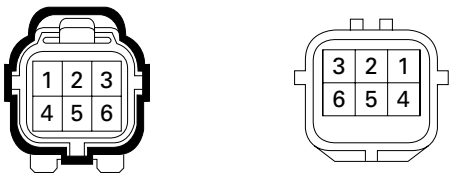		
T-2	NOT USED		
T-3			
T-4	NOT USED		
T-5	NOT USED		
T-6	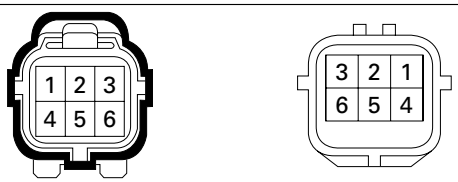		

No.	Connector face	No.	Connector face
X-1		X-11	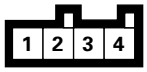
X-2		X-12	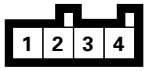
X-3		X-13	NOT USED
X-4		X-14	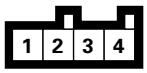
X-5		X-15	
X-6		X-16	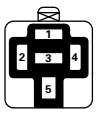
X-7	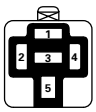	X-17	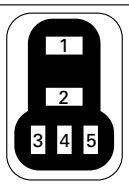
X-8		X-18	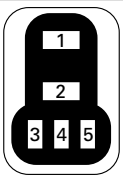
X-9		X-19	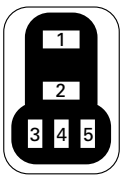
X-10	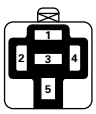	X-20	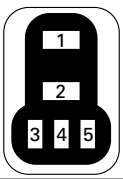

No.	Connector face	No.	Connector face
X-21	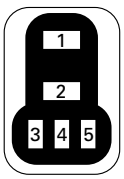		
X-22	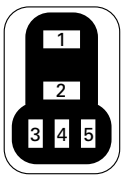		
X-23	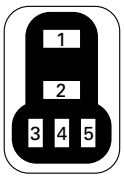		
X-24	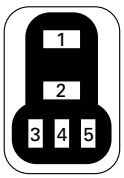		
X-25	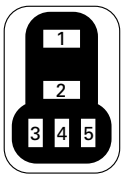		
X-26	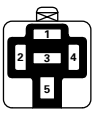		
X-27	**NOT USED**		
X-28	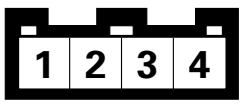		
X-29	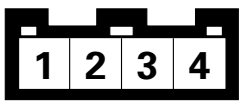		

No.TFELC-WE-781 PRINTED IN JAPAN