Owner's Manual
for Vehicle

Contents

A-Z

CarManuals2.com

Online Edition for Part-No. 01 41 0 156 854 - © 09/02 BMW AG

BMW recommends Castrol

CarManuals2.com

M3 convertible

Online Edition for Part-No. 01 41 0 156 854 - © 09/02 BMW AG

Thank you for deciding on a BMW M3 convertible.

Thorough familiarity with your vehicle will provide you with enhanced control and security when you drive it. Therefore, we have one request:

Read the information contained in this Owner's Manual before driving your new BMW M3 convertible for the first time. It contains important information on vehicle operation that will enable you to make full use of the advanced technical equipment of your BMW M3 convertible. In addition, you will receive information on vehicle maintenance to help ensure operating and traffic safety as well as the best possible value retention of your BMW.

For more detailed information refer to the Supplemental Manuals.

BMW M also makes decisive contributions toward greater safety in traffic through its BMW driver training.

This Owner's Manual should be considered a permanent part of this vehicle. It should stay with the vehicle when sold to provide the next owner with important operating, safety and maintenance information.

CarManuals2.com

We wish you an enjoyable driving experience.

BMW M

Online Edition for Part-No. 01 41 0 156 854 - © 09/02 BMW AG

Notes

About this Owner's Manual

We have made every effort to ensure that you are able to find what you need in this Owner's Manual as quickly as possible. The fastest way to find certain topics is by using the detailed index at the end. If you wish to gain an initial overview of your vehicle, you will find this in the first chapter.

Should you wish to sell your BMW at some time in the future, please remember to hand over this Owner's Manual to the new owner; it is an important part of the vehicle.

Should you have any further questions, your BMW center will be glad to assist at any time.

© 2002 BMW M GmbH
Munich, Germany
Reprinting, including excerpts, only with the written consent of BMW M GmbH, Munich.
Order No. 01 41 0 156 854
US English VIII/02
Printed in Germany
Printed on environmentally friendly paper – bleached without chlorine, suitable for recycling.

Symbols used

Indicates precautions that must be followed precisely in order to avoid the possibility of personal injury and serious damage to the vehicle.

Contains information that will assist you in gaining the optimum benefit from your vehicle and enable you to care more effectively for your vehicle.

Refers to measures that can be taken to help protect the environment.

◀ Marks the end of a specific item of information.

CarManuals2.com

* Indicates special equipment, country-specific equipment and optional extras.

Identifies systems or components which can be activated or adapted to suit an individual driver's requirements – Vehicle Memory, Key Memory. Refer to page 65. Activation and adjustments on some of these systems can be performed at your BMW center.◀

Your individual vehicle

On purchasing your BMW, you have decided in favor of a model with individualized equipment and features. This Owner's Manual will describe all of the equipment that the BMW M3 convertible has to offer you.

We hope you will understand that equipment and features are included that you might not have chosen for your vehicle. You can easily identify any differences with the aid of the asterisk * used to identify all optional equipment and accessories.

If your BMW features equipment that is not described in this Owner's Manual, such as a car radio or telephone, we have enclosed Supplementary Owner's Manuals. We ask you to read these manuals as well.

Online Edition for Part-No. 01 41 0 156 854 - © 09/02 BMW AG

Status at time of printing

BMW pursues a policy of continuous, ongoing development that is conceived to ensure that our vehicles continue to embody the highest quality and safety standards combined with advanced, state-of-the-art technology. For this reason, the features described in this Owner's Manual could differ from those on your vehicle. Nor can errors and omissions be entirely ruled out. You are therefore asked to appreciate that no claims can be recognized on the basis of the data, illustrations or descriptions in this Owner's Manual.

For your own safety

CarManuals2.com

Use unleaded gasoline only. Fuels containing up to and including 10% ethanol or other oxygenates with up to 2.8% oxygen by weight – that is, 15% MTBE or 3% methanol plus an equivalent amount of co-solvent – will not void the applicable warranties respecting defects in materials or workmanship. Field experience has indicated significant differences in fuel quality – volatility, composition, additives, etc. – among gasolines offered for sale in the United States and Canada. The use of poor quality fuels may result in driveability, starting and stalling problems especially under certain environmental conditions, such as high ambient temperature and high altitude. Should you encounter driveability problems which you suspect could be related to the fuel you are using, we recommend that you respond by switching to a recognized high-quality brand.
Failure to comply with these recommendations may result in unscheduled maintenance.
Obey pertinent safety rules when you are handling gasoline.◀

Important safety information!

For your own safety, use genuine parts and accessories approved by BMW. When you purchase accessories tested and approved by BMW and Original BMW Parts, you simultaneously acquire the assurance that they have been thoroughly tested by BMW to ensure optimum performance when installed on your vehicle.
BMW warrants these parts to be free from defects in material and workmanship.
BMW will not accept any liability for damages resulting from installation of parts and accessories not approved by BMW.
BMW cannot test every product made by other manufacturers to verify if it can be used on a BMW safely and without risk to either the vehicle, its operation, or its occupants.
Original BMW Parts, BMW Accessories and other products approved by BMW, together with professional advice on using these items, are available from all BMW centers.
Installation and operation of non-BMW approved accessories such as alarms, radios, amplifiers, radar detectors, wheels, suspension components, brake

dust shields, telephones – including operation of any portable cellular phone from within the vehicle without using an externally mounted antenna – or transceiver equipment, such as CB, walkie-talkie, ham radio or similar, may cause extensive damage to the vehicle, compromise its safety, interfere with the vehicle's electrical system or affect the validity of the BMW Limited Warranty. Contact your BMW center for additional information. Do not use key or remote control to lock doors or luggage compartment with anyone inside the vehicle. Refer to the Owner's Manual for more details. ◀

Maintenance, replacement, or repair of the emission control devices and systems may be performed by any automotive repair establishment or individual using any certified automotive part. ◀

Symbol on vehicle parts

Indicates that you should consult the relevant section of this Owner's Manual for information on a particular part or assembly.

Service and warranty

CarManuals2.com

This manual is supplemented by a Service and Warranty Information Booklet for US models or a Warranty and Service Guide Booklet for Canadian models.

We recommend that you read this publication thoroughly.

Your BMW is covered by the following warranties:

- ▷ New Vehicle Limited Warranty
- ▷ Rust Perforation Limited Warranty
- ▷ Federal Emissions System Defect Warranty
- ▷ Federal Emissions Performance Warranty
- ▷ California Emission Control System Limited Warranty.

Detailed information about these warranties is listed in the Service and Warranty Information Booklet for US models or in the Warranty and Service Guide Booklet for Canadian models.

Reporting safety defects

The following only applies to vehicles owned and operated in the US.

If you believe that your vehicle has a defect which could cause a crash or could cause injury or death, you should immediately inform the National Highway Traffic Safety Administration NHTSA in addition to notifying BMW of North America, LLC, P.O. Box 1227, Westwood, New Jersey 07675-1227, Telephone toll-free 1-800-831-1117.

If NHTSA receives similar complaints, it may open an investigation, and if it finds that a safety defect exists in a group of vehicles, it may order a recall and remedy campaign. However, NHTSA cannot become involved in individual problems between you, your dealer, or BMW of North America, LLC.

To contact NHTSA, you may either call the Auto Safety Hotline toll-free at 1-800-424-9393 or 366-0123 in the Washington, D.C. area, or write to: NHTSA, U.S. Department of Transportation, Washington, D.C. 20590. You can also obtain other information about motor vehicle safety from the Hotline.

CarManuals2.com

Contents

Notes

About this Owner's Manual 4
Symbols used 4
Your individual vehicle 4
Status at time of printing 5
For your own safety 5
Symbol on vehicle parts 6
Service and warranty 6
Reporting safety defects 6

Overview

Cockpit 14
Instrument cluster 16
Indicator and warning lamps 18
Steering wheel with multifunction buttons 22
Hazard warning triangle* 23
First-aid kit* 23
Refueling 24
Fuel specifications 25
Tire inflation pressure 25

Controls and features

Opening and closing:
Keys 30
Central locking system 30
Opening and closing – via the remote control 31
Opening and closing – via the door lock 33
Opening and closing – from the inside 34
Luggage compartment lid 35
Luggage compartment 37
Alarm system* 38
Electric power windows 40
Convertible top 41
Wind deflector* 46

To adjust:
Safe seating position 48
Seats 49
Power seat adjustment 49
Head restraints 50
Entering the rear 51
Safety belts 52
Seat and mirror memory 53
Seat heating* 54
Steering wheel 55
Mirrors 55

CarManuals2.com

Controls and features

Passenger safety systems:
Airbags 57
Transporting children safely 59
Rollover protection system 63
Vehicle Memory, Key Memory 65

Driving:
Ignition lock 66
Starting engine and driving off 67
Switching off the engine 69
Parking brake 69
Manual transmission 70
Sequential M gearbox SMG II* 71
Turn signal indicator/Headlamp flasher 76
Washer/wiper system/Rain sensor* 77
Cruise control 78

Everything under control:
Odometer 80
Tachometer 80
Temperature gauge 80
Fuel gauge 81
Engine coolant temperature gauge 81
Service interval display 82
Check Control 82
Clock 83
Computer 84

Technology for safety and driving convenience:
Park Distance Control (PDC)* 86
Dynamic Stability Control (DSC) 87
Flat Tire Monitor 88
M Engine dynamics control 91

Lamps:
Parking lamps/Low beams 92
Instrument lighting 93
High beams/Standing lamps 93
Fog lamps 94
Interior lamps 94
Reading lamps 94

Controlling the climate for pleasant driving:
Automatic climate control 96

Interior conveniences:
Glove compartment 101
Storage compartments 101
Cellular phone* 102
Ashtray, front* 102
Ashtray, rear* 103

Loading and transporting:
Ski bag* 104
Cargo loading 106
Roof-mounted luggage rack for the hardtop* 107

CarManuals2.com

Operation, maintenance

Special operating instructions:
Break-in procedures 110
Driving notes 111
Antilock Brake System (ABS) 111
Brake system 112
Hardtop* 113

Wheels and tires:
Tire inflation pressure 115
Tire condition 115
Tire replacement 116
Wheel and tire combinations 118
Winter tires 118
Snow chains* 119

In the engine compartment:
Hood 120
Engine compartment essentials 122
Washer fluids 124
Engine oil 124
Coolant 126
Brake fluid 127

Maintenance:
The BMW Maintenance System 128

Laws and regulations:
California Proposition 65 warning 130
OBD interface socket 130

Contents

Owner service procedures

Replacement procedures:
Onboard tool kit 134
Windshield wiper blades 134
Lamps and bulbs 135
Repairing a flat tire 139
Battery 143
Fuses 144

Giving and receiving assistance:
Jump-starting 145
Towing the vehicle 146

Technical data

Engine data 150
Dimensions 151
Weights 152
Capacities 153

Index

Everything from A to Z 156

CarManuals2.com

CarManuals2.com

CarManuals2.com

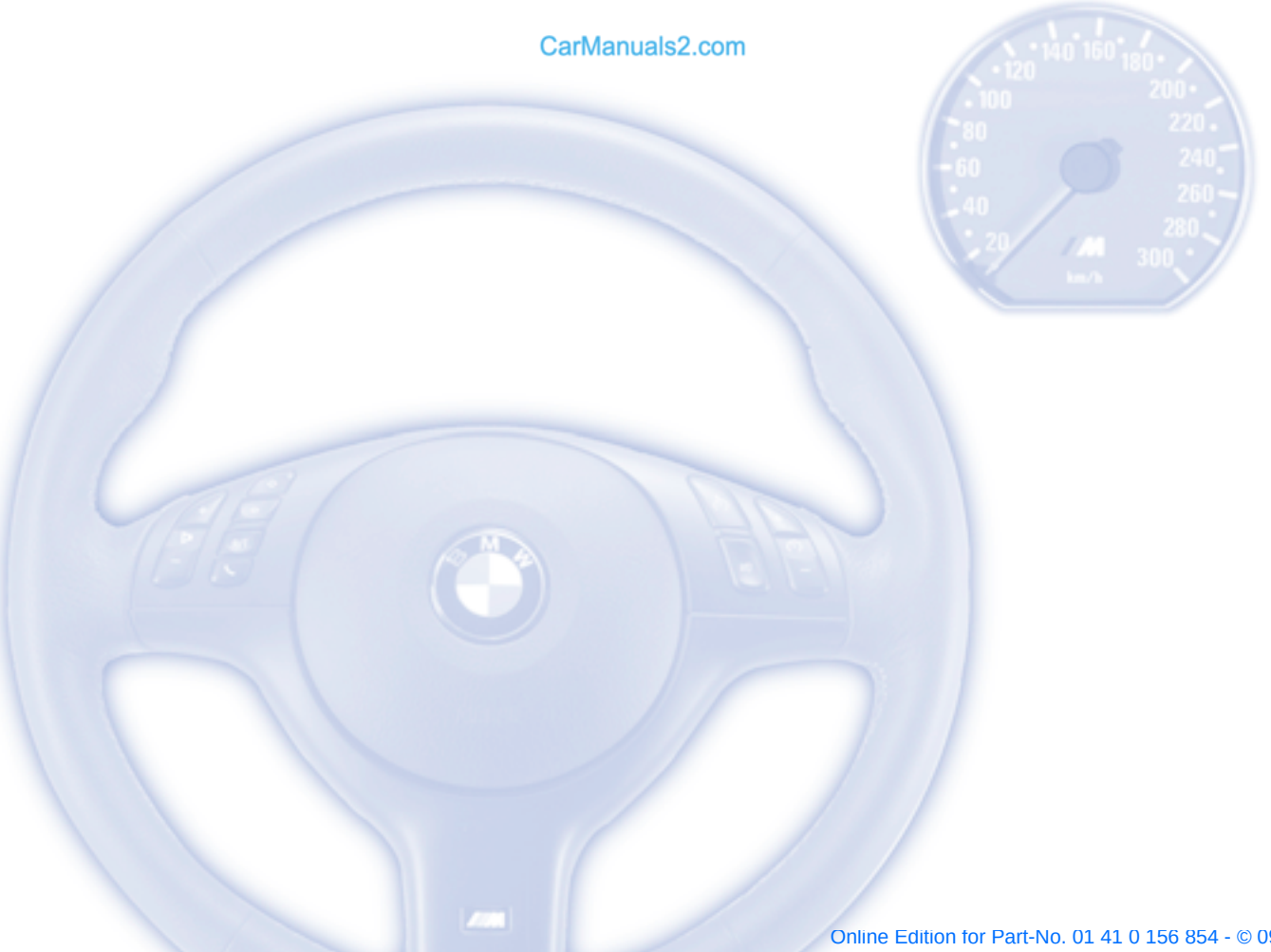

Online Edition for Part-No. 01 41 0 156 854 - © 09/02 BMW AG

CarManuals2.com

Overview

Controls and features

Operation, maintenance

Owner service procedures

Technical data

Index

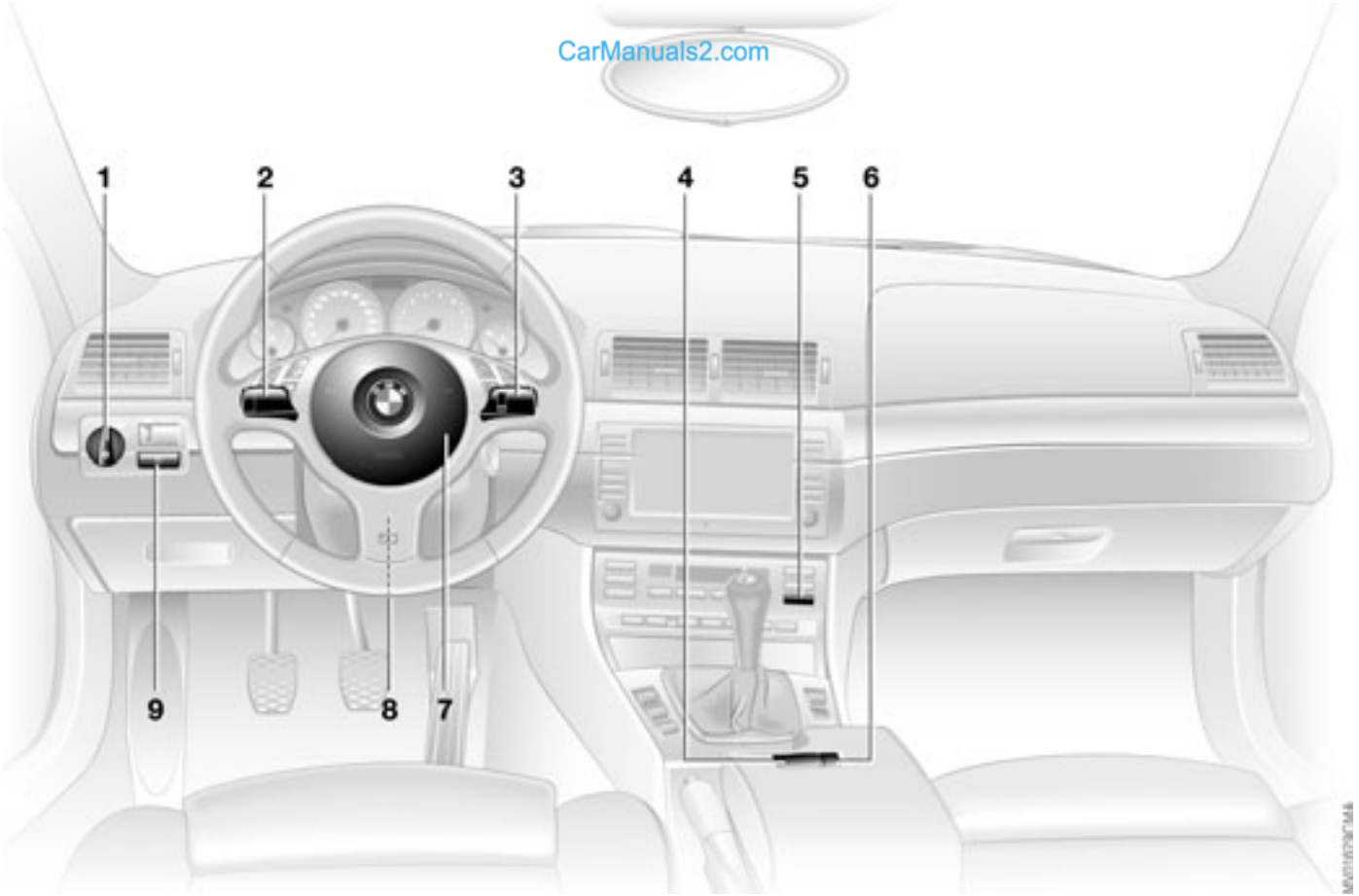

Online Edition for Part-No. 01 41 0 156 854 - © 09/02 BMW AG

Cockpit

1 Parking lamps/Low beams 92

2 ▷ Turn signal indicators 76
▷ Standing lamps 93
▷ High beams 93
▷ Headlamp flasher 76
▷ Computer 84

3 Washer/wiper system/Rain sensor 77

4 Hazard warning flashers

5 Rear window defroster 99

6 Central locking system 30

7 Horn: the entire surface

8 Steering wheel 55

9 Fog lamps 94

CarManuals2.com

CarManuals2.com

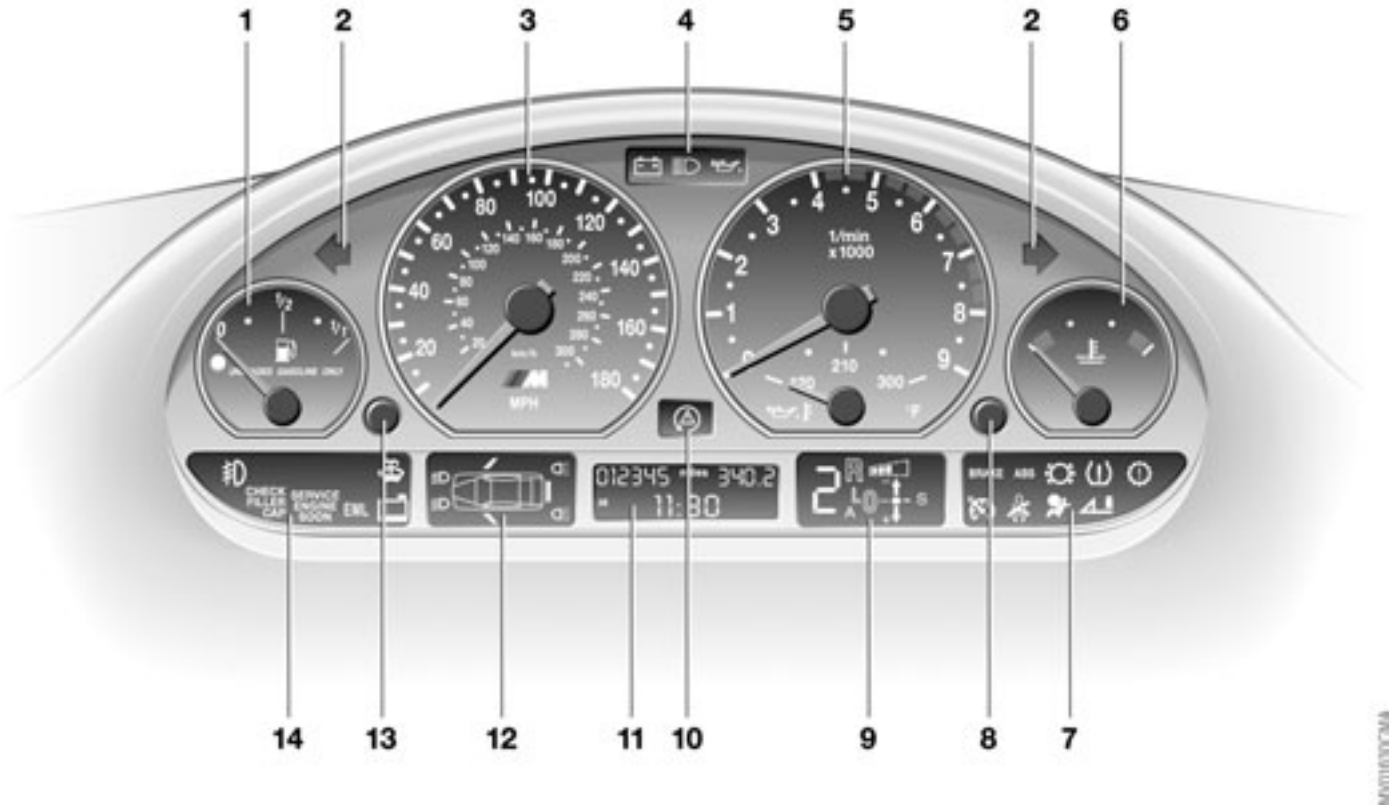

Online Edition for Part-No. 01 41 0 156 854 - © 09/02 BMW AG

Instrument cluster

1 Fuel gauge 81
2 Turn signal indicator 20
3 Speedometer
4 Indicator and warning lamps 18 to 21
5 Tachometer and engine oil temperature gauge 80
6 Engine coolant temperature gauge 81
7 Indicator and warning lamps 18 to 21
8 Clock reset
▷ Clock 83
▷ Unit of measure of outside temperature display 84
9 Display for sequential M gearbox SMG II 72
10 Indicator lamp for Dynamic Stability Control (DSC) 87
11 Display for
▷ Trip odometer 80
▷ Clock 83
▷ Service interval 82
▷ Computer 84
12 Check Control 82
13 Trip odometer, reset to zero 80
14 Indicator and warning lamps 18 to 21

CarManuals2.com

Technology that monitors itself

Indicator and warning lamps that are identified by ● are tested for proper functioning whenever the ignition key is turned. They each light up once for different periods of time.

If a fault should occur in one of these systems, the corresponding lamp does not go out after the engine is started or it lights up while the vehicle is moving. You will see how to react to this below.

Red: stop immediately

Battery charge current ●
The battery is no longer being charged. There is a malfunction of the alternator drive belt or in the charging circuit of the alternator. please contact the nearest BMW center.

If the drive belt is defective, stop and switch off the engine immediately to prevent overheating and serious engine damage. If the drive belt is defective, increased steering effort is also required.◀

Engine oil pressure ●
An alarm sounds at the same time. Stop vehicle immediately and switch off engine. Check the engine oil level and top up as required. If the oil level is correct, please contact the nearest BMW center.

CarManuals2.com

Do not continue driving, as the engine could sustain serious damage from inadequate lubrication.◀

Flat Tire Monitor ●
In addition, an acoustic signal is sounded: a tire failure has occurred. To come to an immediate stop, reduce speed, while avoiding any sudden, jerky braking or steering maneuvers.
For additional information: refer to page 88

Brake warning lamp ●
If the lamp comes on when the parking brake is not engaged: check the brake fluid level. Before driving further, be sure to comply with the instructions on pages 112 and 127.

Brake warning lamp for Canadian models.

Red: an important reminder

Brake warning lamp ●
Comes on when the parking brake is engaged – an additional acoustic signal sounds when starting off. For additional information: refer to page 69

Brake warning lamp for Canadian models.

Lock backrest/Please fasten safety belts ●
comes on together with an acoustic signal until the safety belts are fastened. Flashes when the backrest is not locked.
For additional information on locking the backrest, refer to page 51
For additional information on safety belts: refer to page 52

Airbags ●
Please have the system inspected at your BMW center.
For additional information: refer to page 57

Red and yellow: continue driving cautiously

The red brake warning lamp lights up together with the yellow indicator lamps for ABS ● and DSC:
The entire ABS, CBC and DSC control system has failed. Continue to drive; drive cautiously and defensively and avoid full brake applications. Please have the system checked by your BMW center as soon as possible.
For additional information: refer to pages 87, 111

Indicator and warning lamps CBC, ABS and DSC for Canadian models.

Orange: consult the nearest BMW center

Sequential M gearbox SMG II
If the indicator lamp fails to go out after the engine has been started, or if it comes on during normal driving: this indicates a malfunction in the system. Please consult the nearest BMW center.
Indicator lamp flashes: a system overload has occurred.
For additional information: refer to page 75

Yellow: check as soon as possible

Engine oil level
Comes on while driving and is accompanied by an alarm: the engine oil level has fallen to the absolute minimum; refill as soon as possible. Do not drive more than 30 miles/50 km before refilling.
For additional information: refer to page 124

Engine oil level
Comes on after the engine has been shut off and is accompanied by an alarm: add engine oil at your earliest opportunity such as when you stop to refuel
For additional information: refer to page 124

Brake pads ●
Have the brake pads checked.
For additional information: refer to page 112

Flat Tire Monitor ●
The Flat Tire Monitor has been deactivated, either at the button or in response to a system malfunction. In the event of a malfunction, have the system checked by your BMW center.
For additional information: refer to pages 25, 88

Dynamic Stability Control (DSC) ●
The indicator lamp flashes and an acoustic signal sounds: the system is active and governs drive and braking force.
If the indicator lamp fails to go out after the engine is started, or if it comes on during normal driving and stays on: DSC has been deactivated, either at the

CarManuals2.com

button or in response to a system malfunction. In the event of a malfunction, have the system checked by your nearest BMW center.
For additional information: refer to page 87

Dynamic Brake Control (DBC) ●
Malfunction in DBC system. Conventional braking efficiency is available and unrestricted.
Have the system checked and repaired at your BMW center as soon as possible.
For additional information: refer to page 88

Dynamic Brake Control (DBC) warning lamp for Canadian models.

Add washer fluid
The washer fluid is too low. Top off the fluid at the earliest opportunity.
For additional information: refer to page 124

SERVICE ENGINE SOON ●
If the indicator lamp comes on either continuously or intermittently, this indicates a fault in the emissions-related electronic systems.
Although the vehicle remains operational, you should have the systems checked by your BMW center at the earliest possible opportunity.
For additional information: refer to page 130

Service Engine Soon warning lamp for Canadian models.

Engine electronics ●
There is a fault in the electronic engine-management system.
You can continue to drive with reduced engine output or engine speed. Please have the system inspected at your BMW center.

CarManuals2.com

Add coolant
Coolant level too low, top up as soon as possible.
For additional information: refer to page 126

CHECK FILLER CAP ●
This indicator lamp comes on when the fuel filler cap is loose or missing.
Close the filler cap tightly: refer to page 24

Rollover protection system ●
The rollover protection system is deactivated due to a malfunction. Please have the system inspected immediately at your BMW center.
For additional information: refer to page 63

Green: for your information

Turn signal indicator
Flashes when turn signals are on. Rapid flashing: indicates a system malfunction.
For additional information: refer to page 76

Cruise control
Lights up when the cruise control is activated. Ready for operation via the steering wheel with multifunction buttons.
For additional information: refer to page 78

Front fog lamps
Lights up whenever the fog lamps are on.
For additional information: refer to page 94

Blue: for your information

High beams
Comes on when the high beams are on or the headlamp flasher is actuated.
For additional information: refer to pages 76, 93

CarManuals2.com

Steering wheel with multifunction buttons

These buttons let you operate the following functions quickly and without being distracted from traffic conditions:

▷ Selected radio functions
▷ The cruise control
▷ Several telephone* functions.

The controls are active only when the corresponding systems and accessories are switched on.◀

Press briefly:

Accept incoming call, start dialing, terminate call.

R/T

Switch between phone and radio, cassette, CD and MD.

Forward:

▷ Radio
Press briefly: station scan in FM band
Extended pressure: station search
▷ CD/MD
Press briefly: jump to next track
Extended pressure: search function in track
▷ Cassette
Press briefly: jump to next track or stop fast forward
Extended pressure: fast forward
▷ Phone
Scan personal phone book.

Rewind: same functions as forward.

Volume.

CarManuals2.com

Cruise control: select a stored setting.

Cruise control: store and accelerate + or decelerate and store –.

I/0

Cruise control: activate/interrupt/deactivate.

Hazard warning triangle*

The hazard warning triangle is stored ready to use in the luggage compartment lid inside the toolbox for the onboard tool kit.

To open the container, loosen the wing nut.

Always observe all legal regulations requiring a warning triangle to be carried in the vehicle.◀

CarManuals2.com

First-aid kit*

The first-aid kit is located under the front passenger's seat.

To open: pull the handle and fold the cover down.

To fasten: fold the cover up and press it until the tab engages.

Several of the items contained in the first-aid kit have a limited service life. For this reason, check the expiration dates of each of the items regularly, and replace any with passed dates. You can acquire replacements in any drugstore or pharmacy.
Always observe all legal regulations requiring a first-aid kit to be carried in the vehicle.◀

When handling fuels, comply with all of the applicable safety precautions posted at the service station. Never carry spare fuel containers in your vehicle. Whether empty or full, these containers can leak, cause an explosion, or lead to fire in the event of a collision.◀

CarManuals2.com

Fuel filler door

Always switch off the engine before refueling, as it is not possible to add fuel with the engine running, and attempts may also trigger the SERVICE ENGINE SOON lamp.◀

Press on the rear edge of the fuel filler door to open and close it.

If an electrical malfunction occurs, you can unlock the fuel filler door manually:

Pull the knob with the fuel pump symbol on the right trim panel of the luggage compartment.

Simple and environmentally friendly

Open the filler cap carefully to prevent fuel from spraying out. Fuel spray may cause injury.◀

Keep the filler cap in the bracket attached to the fuel filler door – see arrow.

When refueling, insert the filler nozzle completely into the filler pipe. Pulling the nozzle out of the pipe during refueling

▷ results in premature pump shutoff
▷ and will reduce the effect of the vapor recovery system on the pump.

The fuel tank is full when the filler nozzle shuts off the first time.

Online Edition for Part-No. 01 41 0 156 854 - © 09/02 BMW AG

Refueling

Close the fuel filler cap carefully after refueling until a click is heard. While closing, be sure not to squeeze the strap which is fastened to the cap. A loose or missing cap will activate the CHECK FILLER CAP lamp.◀

Fuel tank capacity

▷ Approx. 16.6 gal./63 liters, of which
▷ approx. 2.1 gal./8 liters are reserve capacity.

Do not drive to the last drop of fuel. This can prevent the engine from operating properly and result in damage.◀

CarManuals2.com

Fuel specifications

The engine uses lead-free gasoline only.

Required fuel:

▷ Premium Unleaded Gasoline, min. 91 AKI.
AKI = Anti Knock Index

Never use leaded fuel, as it would cause permanent and irreversible damage to the oxygen sensor and the catalytic converter.◀

Tire inflation pressure

The specified inflation pressures are provided on a sticker attached to the B-pillar and are visible with the driver's door open.

Checking tire pressures

All pressures are specified in the units usually used in your country – psi/kilo-pascal – for tires at ambient temperatures, also refer to the following tire inflation pressure table.

After correcting the tire inflation pressure, reinitialize the Flat Tire Monitor so that it can monitor the tire inflation pressure, refer to page 88.

Tire inflation pressure

Check the tire pressures on a regular basis – at least twice a month – and before every extended journey. Incorrect tire pressure can otherwise lead to driving instability, tire damage and accidents.◀

CarManuals2.com

Comply with tire approval specifications

The inflation pressures in the table apply to BMW-approved tire sizes and tire manufacturers. Your BMW center will be glad to supply this information. Higher pressures may be required for tires made by other manufacturers.

Your vehicle is equipped with tires which not only meet US standards, but also European standards. We recommend the exclusive use of BMW-approved tires.

Tire inflation pressure

BMW	Tires All pressure specifications in the table are indicated in psi/ kilopascal with cold tires – cold = ambient temperature			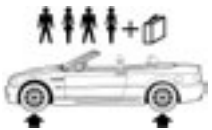	
	225/45 ZR 18	33/230	-	41/280	-
	255/40 ZR 18	-	35/240	-	48/330
M3 convertible	225/40 ZR 19	33/230	-	41/280	-
	255/35 ZR 19	-	35/240	-	48/330
	225/45 R 17 91 H M+S	33/230	38/260	36/250	46/320

CarManuals2.com

CarManuals2.com

Overview

Controls and features

Operation, maintenance

Owner service procedures

Technical data

Index

CarManuals2.com

The key set

1 Master keys with remote control unit – determine the functions of the Key Memory, refer to page 65.
You can mark the individual keys for subsequent identification by applying the colored decals that you received when accepting delivery of your vehicle

There is an extended-life battery in every master key with remote control that is charged automatically in the ignition lock as you drive.
For this reason, if you have a master key with remote control that is otherwise not used, use that key at least once every year while driving for an extended period to charge the battery.◀

2 Spare master key – for storage in a safe place, such as in your wallet. This key is not intended for constant use

3 Door and ignition key – the locks for the luggage compartment lid and the glove compartment cannot be operated with this key. This is useful for valet parking, for example

CarManuals2.com

Central locking system

The concept

The central locking system engages and releases the locks on the

▷ doors
▷ luggage compartment lid
▷ fuel filler door and
▷ glove compartment.

The central locking system is ready for operation whenever the driver's door is closed.

The central locking system can be operated

▷ from outside via the door lock and using the remote control
▷ from inside via the central locking system button.

If it is operated from inside, the fuel filler door will not be locked, refer to page 34.

Operating it from outside simultaneously activates the anti-theft system, which prevents the doors from being unlocked via the door lock buttons or the door release handles. The alarm system is also armed or disarmed.

The central locking system unlocks automatically in the event of an accident. In addition, the hazard warning flashers and interior lamps come on.

Online Edition for Part-No. 01 41 0 156 854 - © 09/02 BMW AG

The concept

The remote control gives you an exceptionally convenient method for unlocking and locking your vehicle. Furthermore, it provides two additional functions:

▷ Switch on the interior lamps, refer to page 32.
With this function you can also search for your vehicle – when parked in an underground garage, for instance

▷ Open the luggage compartment lid, refer to page 32.
The luggage compartment lid will open slightly, regardless of whether it was locked or unlocked.

The anti-theft system is also deactivated/activated simultaneously with the unlocking or locking of the vehicle, and the alarm system is disarmed/armed, and the interior lamps are switched on/off.

You can have a signal set to confirm that the vehicle's locks have engaged securely.◀

Master keys with remote control

Since passengers or animals remaining in the vehicle might be able to lock the doors from the inside, always take the vehicle's keys with you so that the vehicle can be opened again from the outside at any time.◀

If it is no longer possible to lock the vehicle via the remote control, the battery is discharged. Use this key while driving for an extended period in order to recharge the battery. Guard the remote control against unauthorized use by only surrendering the spare key or the door and ignition key, e.g. for valet parking.

CarManuals2.com

In the event of a system malfunction, please contact your BMW center. You can also obtain replacement keys there.◀

1 Unlock, disarm the alarm system
2 Lock and secure, arm alarm system, activate interior lamps, disarm tilt alarm sensor and interior motion sensor
3 Open luggage compartment, Panic mode – trigger alarm

To release

Press button to unlock the driver's door only.

Press the button twice in order to unlock the entire vehicle.◀

To lock and secure

Press button.

To switch on the interior lamps

After locking the vehicle, press button again.

To deactivate the tilt alarm* and interior motion sensors*

Press button a second time immediately after locking.

For additional information: page 39.

To open the luggage compartment

Press button.

The lid will open slightly, no matter whether it was locked or unlocked.

Before and after a trip, be sure that the luggage compartment lid has not been opened unintentionally.◀

Panic mode – trigger alarm

By pressing button for more than two seconds, the alarm can be sounded in the event of danger, if it is armed.

To switch off the alarm:

Press button.

External systems

Local systems or devices in the area may interference with remote control function.

CarManuals2.com

If this should occur, you can still open and close the vehicle using the master key in both the door and luggage compartment locks.

For US owners only

The transmitter and receiver units comply with part 15 of the FCC Federal Communications Commission regulations. Operation is governed by the following:

FCC ID:

▷ LX8EWS
▷ LX8FZVS
▷ LX8FZVE.

Compliance statement:

This device complies with part 15 of the FCC Rules. Operation is subject to the following two conditions:

▷ This device may not cause harmful interference, and
▷ this device must accept any interference received, including interference that may cause undesired operation.

Any unauthorized modifications to these devices could void the user's authority to operate the equipment.◀

Turning the key in the door lock once unlocks the driver's door, the fuel filler door and the glove compartment.

Turning the key a second time unlocks the passenger's door and the luggage compartment lid.

You can have a signal set to confirm that the vehicle's locks have engaged securely.◀

Convenience operation

With the door closed you can also operate the power windows and the convertible top with the door lock.

▷ To open: with the door closed after turning the key for the second time, hold the key in the Unlock position

▷ To fasten: with the door closed, hold the key in the Lock position.

CarManuals2.com

Whenever closing the windows or sliding/tilt sunroof you should always monitor their path and progress to ensure that no one is injured occur. Releasing the key stops the operation.◀

Manual operation

In the event of electrical malfunction

Turn the key all the way to the left or right to unlock/lock the driver's door.

Opening and closing – from the inside

With this button you operate the central locking system whenever the doors are closed. The doors and luggage compartment lid are unlocked or locked only. The anti-theft alarm system is not activated.

If only the driver's door was unlocked from the outside and you press the button, then, with the driver's door still open, the passenger's door, the luggage compartment lid, the fuel filler door and the glove compartment will unlock, too.
If the driver's door is closed, it will be locked.◀

If you desire, the central locking system can be activated automatically as soon as you begin to drive. You may also have this adjusted so that it is specific to keys.◀

To unlock and open the doors

▷ Either unlock the doors together with the button for the central locking system and then pull each of the release handles above the armrests or
▷ pull the release handle for each door twice: the first pull unlocks the door, and the second one opens it.

To lock

▷ Either use the central locking button to lock all doors at once
or
▷ press the individual door lock buttons down. As an added design feature to prevent the driver from being inadvertently locked out of the vehicle, the driver's door lock button will not engage as long as the door is open.

Since passengers or animals remaining in the vehicle might be able to lock the doors from the inside, always take the vehicle's keys with you so that the vehicle can be opened again from the outside at any time.◀

CarManuals2.com

The lock

Only the master keys fit in the lock for the luggage compartment lid, refer to page 30.

To secure separately

Lock the glove compartment using the master key.

The luggage compartment lid is locked and disconnected from the central locking system. If you surrender only the door and ignition key – refer to page 30 – this will prevent unauthorized access via the luggage compartment lid, which is an advantage for valet parking, for instance.

To open from the outside

Press the button in the handle recess – see arrow: the luggage compartment lid opens slightly.

CarManuals2.com

The luggage compartment is lighted when the luggage compartment lid is opened.

Manual operation

In the event of electrical malfunction

Turn the master key to the right as far as it will go, the luggage compartment lid will open slightly.

The luggage compartment lid is locked again as soon as you close the lid.

To open from the inside

If the luggage compartment lid has not been locked separately, you can open it with this button in the footwell on the driver's side when the vehicle is stationary.

Luggage compartment lid

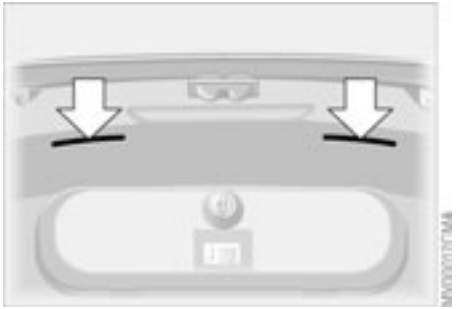

Nevertheless, should it be absolutely necessary to operate the vehicle with the luggage compartment lid open, with closed convertible top:

1. Close all windows
2. Greatly increase the quantity of air from the automatic climate control system, refer to page 98.

To close

The handle recesses – see arrows – in the interior trim panel of the luggage compartment lid make it easier to pull the lid down.

CarManuals2.com

To avoid injuries, be sure that the travel path of the luggage compartment lid is clear when it is closed, following the same precautions as with all closing procedures.◀

Operate the vehicle only when the luggage compartment lid is completely closed. Otherwise, exhaust fumes could penetrate the interior of the vehicle.◀

Emergency release

This lever releases the luggage compartment lid from the luggage compartment's interior.

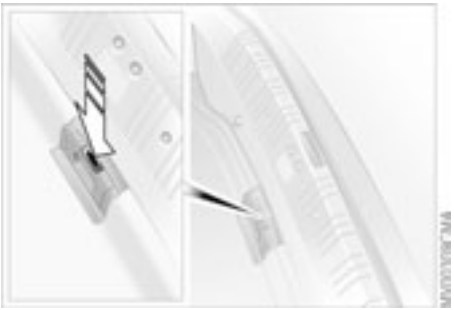

To fold up and secure the floor panel

1. Pull up at the handle and fold the panel up
2. Press the button – see arrow – to release the hanger from the handle
3. Hook the handle into the rubber seal of the drip rail – see arrow.

Carefully replace the hanger in its holder when lowering the floor panel back down.◀

The fittings at the corners of the luggage compartment provide you with a convenient means of attaching luggage nets* and flexible straps for securing luggage.

Refer also to Cargo loading on page 106.

Enlarging luggage compartment

With the convertible top closed, you can enlarge the luggage compartment. To do this, flip the handle outward and press it down and toward the front of the vehicle – see arrow. The convertible top compartment panel is now raised and secured.

To fold down the convertible top compartment panel

To open the convertible top, the convertible top compartment panel must be lowered. To do this, fold out the handle and pull opposite the direction of travel.

CarManuals2.com

When opening the convertible top, refer to page 41, make sure that the luggage compartment is set up for this, otherwise you may damage something.◀

Alarm system*

The concept

The vehicle alarm system responds:

▷ When a door, the hood or the luggage compartment lid are opened
▷ To movement inside the vehicle – interior motion sensor
▷ Altering the vehicle tilt, e.g. as would occur while attempting to steal the wheels or tow the vehicle – tilt alarm sensor system
▷ To interruption of battery voltage.

The system responds to unauthorized vehicle entry and attempted theft by simultaneously activating the following:

▷ Sounding an acoustic alarm for 30 seconds
▷ Activating the hazard warning flashers for approx. five minutes
▷ Flashing the high beams on and off in rhythm with the hazard warning flashers.

To arm and disarm the alarm system

When the vehicle is locked or unlocked by using a key or with the remote control, the alarm system is also simultaneously armed or disarmed.

CarManuals2.com

You can have a signal set as acknowledgment for both arming and disarming the alarm.◀

You can also open the luggage compartment lid when the system is armed by pressing the button of the remote control, refer to page 32. When it is closed, the lid is once again secured.

Indicator lamp displays

▷ The indicator lamp below the interior rearview mirror flashes continuously: the system is armed

▷ The indicator lamp flashes when it is armed: the door(s), the hood or luggage compartment lid are not completely closed. Even if you do not close the alerted area, the remaining areas are deadlocked, and the indicator lamp flashes continuously after ten seconds. However, the interior motion sensor is not activated

▷ If the indicator lamp goes out when the system is disarmed: no manipulation or attempted intrusions have been detected in the period since the system was armed

▷ If the indicator lamp flashes for ten seconds when the system is disarmed: an attempted entry has been detected in the period since the system was armed.

CarManuals2.com

Following triggering of an alarm, the indicator lamp will flash continuously.

Avoiding unintentional alarms

The tilt alarm sensor and interior motion sensor may be deactivated at the same time. You can do this to prevent a false alarm from being triggered in garages with elevator ramps, for instance, or when the vehicle is transported by train:

Lock the vehicle twice to arm the system. Press button on the remote control twice in succession or lock the vehicle twice with the key.

The indicator lamp lights up briefly and then flashes continuously. The tilt alarm sensor and the interior motion sensor are deactivated as long as the system is armed.

Interior motion sensor*

Deactivate the interior motion sensor – see Avoiding unintentional alarms – if persons or animals are left in the vehicle.

▷ The tilt and interior motion sensors are inadvertently switched off when convenience closing of the windows is interrupted within the first 10 seconds and then started again. If this happens, they must be disarmed and reactivated.◀

You can close the windows in the same manner by pulling the switch. The window on the passenger side and the rear windows to not close automatically.

The window on the passenger side closes automatically in ignition key position 2 only.◀

For convenience closing via the door lock, refer to page 33.

To open and close windows

When leaving the vehicle, always remove the ignition key from the lock and remember to close the doors to prevent children from operating the power windows and injuring themselves, etc.◀

CarManuals2.com

With the ignition key in position 1 or higher

- ▷ Press the switch until you feel resistance: the window continues to move as long as you continue to press the switch
- ▷ Press the switch briefly past the pressure point: the window moves automatically. Touching the switch again stops the opening cycle.

Operating all windows at once

With the ignition key in position 1 or higher

- ▷ Press the switch until you feel resistance: all of the windows will continue to lower as long as you continue to press the switch
- ▷ Press the switch briefly past the pressure point: all windows will move automatically. Pressing the switch again stops the opening cycle.

You can close the windows in the same manner by pulling the switch. The windows cannot be closed automatically using this switch.

For convenience closing via the door lock, refer to page 33.

After the ignition has been switched off

After the ignition has been switched off: You can still use the electric power windows for up to 15 minutes, as long as no one opens any of the doors.

CarManuals2.com

The completely automatically operated convertible top combines assured protection against the elements together with simple and easy handling.

So that you will get the most out of enjoying your convertible, here are a few tips:

▷ It is advisable to close the convertible top when the vehicle is being parked. The closed convertible top not only protects the passenger compartment from unforeseeable damage from the weather, it also provides a certain degree of theft protection. In addition, keep valuables only in the locked luggage compartment, even with the convertible top closed

▷ Never mount a roof-mounted luggage rack on the convertible top

▷ At temperatures below 14 °F/–10 °C do not operate the convertible top to prevent damage.

⚠ Never store the convertible top while it is wet to avoid permanent damage from moisture.◀

Driving with the opening or closing operation not completely ended can lead to damage and/or injuries.
Traffic laws applicable in your area take precedence when you operate the convertible top, otherwise you may be breaking the law.
Do not lay objects on the convertible top, since they would fall off when the convertible top is operated and cause damage or injuries.
Do not reach into the convertible top mechanism during opening and closing.
Keep children away from the moving parts of the convertible top during operation.◀

If possible, only operate the convertible top with the vehicle stopped, as otherwise the process may be interrupted.
If you set the convertible top in motion with the vehicle stationary and then have to start suddenly – for instance, at a traffic light – you can still complete the operation by driving as slowly as possible and again pressing and maintaining pressure on the button.
Before closing the convertible top, remove any objects from the windshield frame that could keep the convertible top from closing properly.◀

To close the electric power windows while driving, always be sure to first close either the rear windows, or all 4 windows at the same time, otherwise, at high speed, the windows may not close tightly.◀

CarManuals2.com

At higher speeds, the ensuing vacuum in the passenger compartment can cause the convertible top to begin fluttering. Increase the air supply via the ventilation controls so that a vacuum does not occur in the vehicle.◀

1 To close
2 To open

Locks and security systems

From ignition key position 1 or higher, with the vehicle stationary

If at all possible, only operate the convertible top if the engine is running. This saves unnecessary battery wear.

1. Read and comply with the preceding safety precautions
2. Before opening the convertible top, make sure that the convertible top compartment panel in the luggage compartment is lowered, refer to page 37
3. Make sure that the luggage compartment lid is closed

4. Press and hold the corresponding button for convertible top operation. The red indicator lamp will light up while the convertible top is in motion. It goes out as soon as the opening or closing operation has been completed.
   If the red indicator lamp flashes after the button is released, then the opening or closing operation is not yet completed. The sequence can be continued in the desired direction by pressing this button.
   If the yellow indicator lamp lights up continuously with the button pressed, then the convertible top compartment panel is raised and the convertible top cannot be moved, refer to step 2.

The automatic sequence will be interrupted immediately if you release the button that operates the top. The sequence can be continued in the desired direction by pressing this button.◀

During convertible top operation the rear window moves toward the passenger compartment. To prevent injuries, make sure that the closing path of the convertible top is unobstructed.◀

CarManuals2.com

When operating the convertible top, the windows will lower slightly when you press the button, and after the opening or closing operation has finished, they will go back up, if you keep holding the button down for more than 2 seconds after the indicator lamp has gone out.

The luggage compartment lid cannot be opened while the convertible top is in motion.

Do not close the side power windows using the buttons if the convertible top operation has been interrupted.◀

If the convertible top has been stored in the convertible top compartment for longer periods, e.g. during the winter months while the hardtop is being used, it may be necessary to manually support the first automatic closing operation: if the convertible top should halt right before the closing phase is completed, press against the front part of the convertible top frame from the outside to help the closing process along. Keep pressing the button while doing so until the top starts up again on its own.◀

Operate the convertible top manually in emergency situations only to avoid causing damage due to incorrect operation.◀

If the opening or closing operation is interrupted, the convertible top remains in the respective position for 15 minutes, and the sequence can be continued in the desired direction with the button. After that, the convertible top can be moved again and, if it is an emergency situation, you may have to help the top along manually. This can also be done in ignition key position 0. In certain cases, the luggage compartment lid cannot be opened if the opening or closing operation has been interrupted.◀

Convenience operation from the driver's door lock

Refer to page 33.

Closing manually in the event of an electrical malfunction

1 Emergency operation

2 Allen wrench

3 Recess

Only actuate the convertible top manually to close it, however never to open it, as the convertible top compartment lid cannot be locked and would open during driving.◀

Manual closing is best carried out with two persons from outside with the driver's door open and the driver's seat folded forward. No one is to be in the rear seat while you are doing this.◀

1. Remove the center piece between the rear seats. Take the trim off of the guide rod and flip it forward. Press down hard on the emergency lock 1 – see arrow. After a brief pause, the mechanisms for the convertible top compartment lid will be unlocked

If the mechanisms for the convertible top compartment lid do not unlock, then insert the Allen wrench 2 into the recess 3 and turn clockwise until the mechanisms unlock.◀

2. If the luggage compartment lid is closed, open the convertible top compartment lid up as far as the stop will allow

3. Grasp the convertible top by the lateral guide section – see arrow 1 – and the front convertible top frame – see arrow 2. Lift out the top and swing forward until you encounter a perceptible resistance at a stop. Position the rear convertible top frame vertically and close the convertible top compartment lid. Flip the rear convertible top frame downward

To avoid damaging the side trim, always fold the convertible top forward before folding the rear frame brace up into its vertical position.◀

CarManuals2.com

4. Lift out the cover panel that is in the center of the front convertible top frame
5. Put the Allen wrench 2 – refer to page 44 – into the hex slot – see arrow
6. Pull down on the front convertible top frame as far as possible. Close the convertible top further by turning the wrench in a clockwise direction; continue turning until the front convertible top frame is locked to the windshield frame. The rear convertible top frame will automatically be pressed down onto the convertible top compartment lid and, because of the tension, will close completely.

The closing operation must be completed, as otherwise damage and/or injuries may result.◀

Please consult your BMW center to have the defect corrected.◀

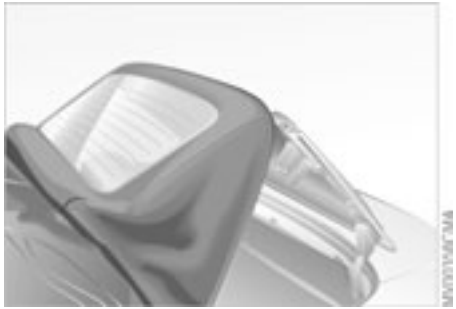

Position for cleaning

To be able to access the convertible top compartment, lean the rear frame of the convertible top against the cover of the convertible top compartment.

First, use the button for activating the convertible top to unlock the locks of the convertible top compartment. Refer to page 42.◀

For additional information on vehicle care, refer to the Caring for your vehicle brochure.◀

CarManuals2.com

Wind deflector*

With the convertible top open, the wind deflector keeps air movement in the passenger compartment to a minimum, thus providing you with a pleasant drive, even at higher speeds. The wind deflector comes in a protective sleeve, and because of its slim dimensions, can be easily stored in the luggage compartment.

Installation

1. Remove wind deflector from the protective sleeve

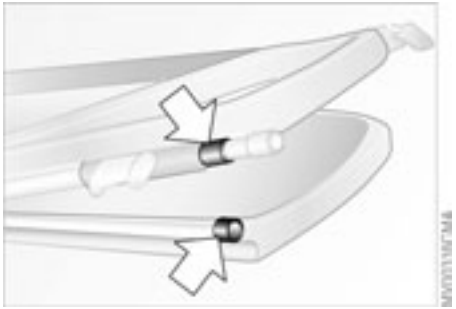

2. Flip out both sides and lock into place. It is essential for the two components marked in the illustration – see arrows – to mesh at this point

3. Hold the wind deflector so that the smaller half points toward the front and guide the mounting pin for the side piece into the proper opening
4. Pull back on the mounting pin for the other side piece by using a slide, so that the mounting pin can be guided into the opening provided
5. Unlock the convertible top compartment lid via the convertible top control button, refer to page 42, and open the convertible top compartment lid
6. Flip the back half of the wind deflector backward, so that the mounts are lying on the vehicle

CarManuals2.com

7. Close the convertible top compartment lid via the convertible top control button. The wind deflector is now attached so that it is theft-proof.

CarManuals2.com

Operate the convertible top compartment lid from above only in order to avoid any pinching.
With the wind deflector in place: never push the front seats all the way back to avoid damaging the wind deflector.◀

Removal

Follow the same procedure as when installing, just reverse the steps.

Safe seating position

For relaxed and fatigue-free driving you should select a sitting position that reflects your personal requirements. In combination with the safety belts and airbags, the correct seating position plays an important role in enhancing occupant safety in the event of an accident. To ensure that the vehicle's safety systems provide you with optimal protection, we request that you direct your careful attention to the following section.

For supplementary information on transporting children, refer to page 59.

Sitting safely with airbags

Always maintain an adequate distance between yourself and the airbags. Always hold the steering wheel by the rim to keep any chance of injury to hands or arms to an absolute minimum should the airbag be deployed. Never allow any objects, individuals or animals to obstruct the areas between passengers and airbags. Never use the front airbag's cover as a storage tray or support for objects of any kind. Never allow front passengers to rest their feet or legs on the airbag cover.◀

For airbag locations and additional information on airbags, refer to page 57.

CarManuals2.com

Sitting safely with safety belts

Never allow more than one person to wear a single safety belt. Never allow infants or small children to ride in a passenger's lap. Avoid twisting the belt while routing it firmly across the pelvis and shoulder, wear it as snugly against your body as possible. Do not allow the belt to rest against hard or fragile objects in your pockets. Do not route the belt across your neck, or run it across sharp edges. Be sure that the belt does not become caught or jammed. Avoid wearing bulky clothing and pull on the lap belt periodically to retension it over your shoulders. In the event of a frontal impact, a loose lap belt could slide over the hips, leading to abdominal injury. In addition, the safety belt's restraint effectiveness is reduced if the belt is worn loosely. Expectant mothers should always wear their safety belts, taking care to position the lap belt against the lower hips, where it will not exert pressure against the abdominal area.◀

For information on using the safety belts, refer to page 52.

When adjusting your seat, always observe the following precautions

Never try to adjust your seat while operating the vehicle. The seat could respond with an unexpected movement, and the ensuing loss of vehicle control could lead to an accident. Never ride with the backrest reclined to an extreme horizontal angle – important for front passengers to remember. Keep the backrest relatively upright to minimize the risk of sliding under the safety belt and sustaining injury in an accident.
With the wind deflector in place: never push the front seats all the way back to avoid damaging the wind deflector.◀

Adjusting the seats

▷ Power seat adjustment, refer to page 49
▷ Head restraint, refer to page 50
▷ Entering the rear, refer to page 51.

Power seat adjustment

Seat adjustment

1 Tilt angle
2 Forward/backward adjustment
3 Height
4 Backrest angle

You can manually adjust the thigh support.

CarManuals2.com

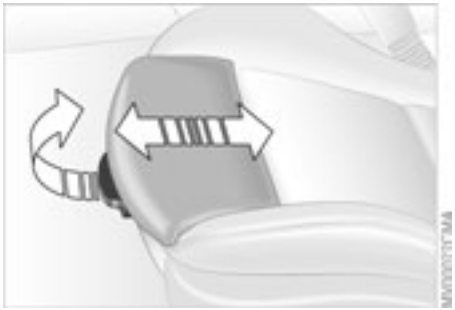

Thigh support

Pull the lever and adjust the position of the cushion for thigh support as desired.

Adjusting the lumbar support*

You can adjust the backrest's contour for additional support in the curvature of your spine's lumbar region.

The upper hips and spinal column receive supplementary support to help you maintain a relaxed, upright position.

▷ Press the front/rear of switch: increase/decrease curvature

▷ Press the upper/lower end of the switch: increase the upper/lower curvature.

Head restraints

CarManuals2.com

Front head restraints

1 Height

⚠ Head restraints reduce the risk of spinal injury in the event of an accident.
Adjust the head restraint.
When moving the head restraints up or down, do not grab on between the head restraint and the upper edge of the backrest to avoid the possibility of injury.◀

Tilt angle: position the head restraints manually in the preferred position.

Rear head restraints

The rear head restraints may only be lowered if there are no passengers in the rear seats. If you do so, you are in violation of the law. Raise the rear head restraints before taking on any passengers in the back.◀

To completely lower the rear head restraints:

1. Press the button – see arrow – and hold it down
2. Push the head restraint down from above.

Raising the rear head restraints

Raise the head restraints until you hear them click into place.

Do not remove the rear head restraints as this would damage them.◀

For further information, please consult your BMW center.

Do not use the rear head restraints as storage shelves. Always keep the travel path for the roll-over protection system free and clear. Under no circumstances should you put any kind of cover such as an antimacassar on the head restraints, refer also to the labeling on the head restraints.◀

CarManuals2.com

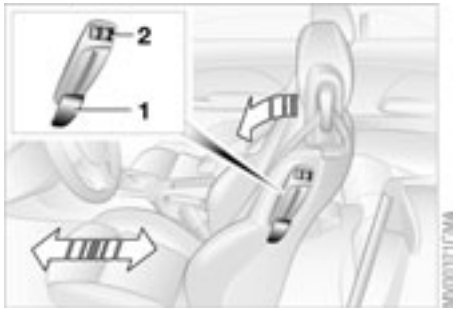

The Seat-integrated safety belt system (SGS) allows for easy access to the rear.

1. Lift the lever 1 up and tilt the backrest forward
2. Press and hold button 2 in driving direction until the seat moves to the desired position
3. After entering the rear, fold back and lock the backrest
4. Press button 2 opposite the direction of travel and hold. The seat moves back into its previous position. If the button 2 is released beforehand, the seat stops in the respective position.

The seat can be locked into position when it is tilted forward. This is particularly convenient when entering the vehicle on an incline, for example.

Entering the rear

Press against the backrest until you hear it snap into place. Lever 1 does not have to be released to fold the seat back.◀

⚠ Lock both backrests while driving, otherwise there is a danger of an unexpected movement causing an accident.◀

The indicator lamp in the instrument cluster flashes, when the backrest is not locked, refer to page 18.

Safety belts

Always wear your safety belt

Always fasten your safety belt before starting off. As supplemental restraint devices, the airbags are designed to enhance the effectiveness of the safety belts, and not to replace them.

▷ Before putting your safety belts on in the rear, take them out of the holder.◀

▷ Leave the rear safety belts in the holders if they are not needed, in order to avoid unwanted movement from the safety belts at high speeds.◀

To close

Make sure you hear the lock engage in the belt buckle.

CarManuals2.com

To release

1. Press the red button in the belt buckle
2. Hold the belt
3. Guide the belt back into its reel.

Adjusting safety belt height

The front safety belt automatically adjusts your body size via the setting of the head restraint height, refer to page 50.

⚠ If the safety belt system has been subjected to the stresses involved in an accident or otherwise damaged: have the entire safety belt mechanism replaced by your BMW center, including the safety belt tensioner. In addition, have your BMW center inspect the safety belt anchors. If a child-restraint system was in the vehicle during an accident, consult the manufacturer's instructions regarding replacement.◀

You can store and recall three different driver's seat and outside mirror positions.

The setting for the lumbar support is not stored in memory.◀

To store

1. Ignition key in position 1 or 2
2. Adjust your seat and outside mirrors to the desired position
3. Press the MEMORY button: the indicator lamp in the button lights up
4. Press memory button 1, 2 or 3, as desired. The indicator lamp goes out.

To select a stored setting

Do not select a memory position while the vehicle is moving. If you do so, there is a risk of accident from unexpected seat movement.◀

Driver's door open after unlocking or ignition key in position 1:

▷ Briefly press memory button 1, 2 or 3, as desired.
Movement stops immediately when one of the seat-adjustment or memory buttons is operated during the adjustment process.

With the driver's door closed and the ignition key either removed or in position 0 or 2:

▷ Press and hold the desired memory button – 1, 2 or 3 – until the adjustment process is completed.

If you press the MEMORY button accidentally: press the button again; the indicator lamp goes out.◀

Your BMW center can adjust your vehicle's systems in such a manner that your personalized settings are automatically set for the seat and exterior mirror positions when you unlock the vehicle with your personal remote control.◀

Before activating the programmed adjustment feature, ensure that the footwell behind the driver's seat is empty and unobstructed. If you fail to do so, any persons, animals or objects behind the seat could be injured or damaged by a rearward movement of the seat.◀

CarManuals2.com

You can deactivate this automatic feature by setting the mirror selection switch to the passenger side position.

Passenger-side exterior mirror tilt function

Automatic curb monitor*

1. Move mirror selector switch 1 to the driver's mirror position
2. When shifting into Reverse, or placing the selector lever in position R, the passenger-side mirror tilts downward. This brings the lower area adjacent to the vehicle – curbs, etc. – into the driver's field of vision while parking.

How far the passenger mirror tilts can be set individually for each ignition key.◀

Seat heating*

The seat cushion and backrest can be heated with the ignition key in position 2.

You can call up different heating modes by repeatedly pressing the buttons.

You can also switch the higher heating modes off directly:

Press the button and hold it slightly longer.

CarManuals2.com

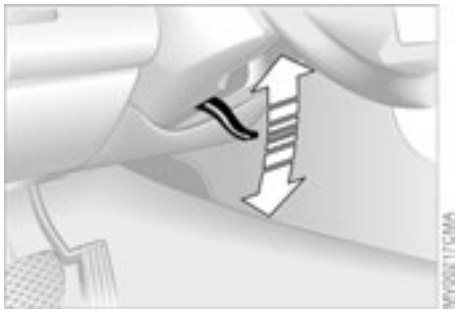

To adjust

Never attempt to adjust the steering wheel while driving the vehicle – it could respond with unexpected movement, posing a potential accident hazard.◀

1. Push the locking lever downward
2. Adjusting steering column reach and rake for your selected seating position
3. Pull the lever back up.

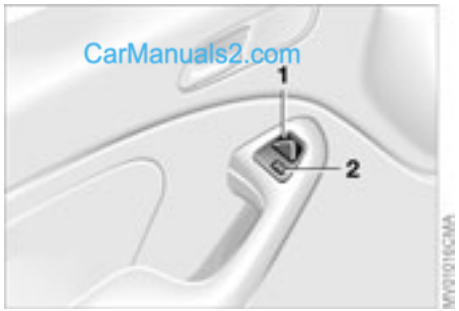

To adjust exterior mirrors

1 Switch for 4-way adjustment

2 Selection switch for changing between mirrors

To adjust manually

The mirrors can also be adjusted manually:

Press the edges of the lens.

To store the mirror setting, refer to Seat and mirror memory on page 53.

The passenger-side mirror features a convex lens. When estimating the distance between yourself and other traffic, bear in mind that the objects reflected in the mirror are closer than they appear. This means that estimations of the distance to following traffic should not be regarded as precise.◀

Electric defrosting

Both mirrors are heated automatically in ignition key position 2.

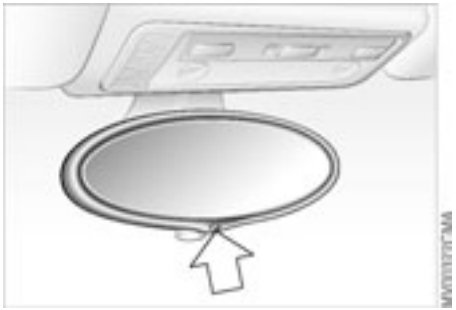

CarManuals2.com

Interior rearview mirror with automatic dimming feature

This mirror automatically dims through an infinitely variable range and switches automatically to its clear, undimmed mode whenever you engage reverse gear.

There are two photocells for automatic dimming. One photocell – see arrow – is positioned in the mirror's frame, while the other is slightly offset on the opposite side of the mirror.

For the mirror to function perfectly, keep the photocells clean and the area between the inside rearview mirror and the windshield free of any obstruction like stickers, etc.

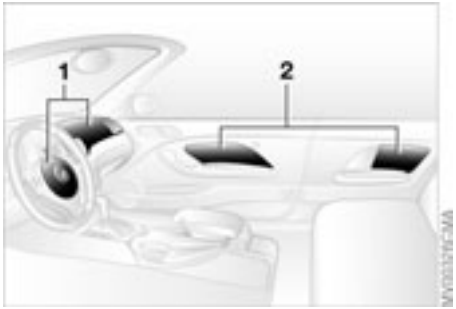

1 Front airbags on the driver and passenger sides
2 Side airbags on the driver and passenger sides – front and rear*

Protective effect

The front airbags protect the driver and passenger in the event of a head-on collision where the protection provided by the safety belt alone would not be adequate. The side airbags help provide protection in the event of a collision from the side. Each of the side airbags is designed to help support the seat occupant's upper body.

For information on the correct sitting position, refer to page 48.

The side airbags in the rear passenger area* of your vehicle may already have been deactivated either at the time of manufacture or by a BMW center. You may have them activated if you desire to do so. Please contact your BMW center for additional information.◀

CarManuals2.com

The airbags will not be triggered in the event of a minor accident, certain vehicle rollover situations or collisions from the rear.◀

Do not apply adhesive materials to the cover panels of the airbags, cover them or modify them in any other way. Do not attempt to remove the airbag restraint system from the vehicle. In the event of a malfunction, deactivation or triggered activation – as a response to an accident – of the airbag restraint system, consult your BMW center for inspection, repair or disassembly. Modifications may not be made on either the wiring or the individual components in the airbag system. This includes the upholstered covers on the steering wheel, the instrument panel, the side trim panels of the doors and front roof pillars and on the sides of the front headliner. Do not attempt to remove or dismantle the steering wheel. Unprofessional attempts to service the system could lead to failure in an emergency or undesired airbag activation, either of which could result in personal injury. Do not touch the individual components directly after the system has been triggered, as otherwise there is a danger of burns.◀

At all times, occupants should sit upright and be properly restrained – infants and small children in appropriate child-restraint systems; larger children and adults using the safety belts. Never let an occupant's head rest near or on a side airbag because the inflating airbag could cause a serious or fatal injury. Please note that the word Airbag imprinted on the door trim panel indicates the airbag's location.
Accident research shows that the safest place for children in an automobile is in the rear seat. However, a child sitting in the rear seat and not properly restrained may place his or her head on or near the side airbag, if so equipped. For example, a child – even though belted – may fall asleep with his or her head against the side airbag. It may be difficult for a driver to ensure that children in the rear seat will remain prop-

erly positioned at all times and not place their heads on or near the side airbag. Therefore, we recommend that the rear seat side airbags, if provided, be deactivated if you plan to transport children in the rear seat.
The rear seat side airbags may already have been deactivated, either at the time of manufacture or by a BMW center. Labels in the door opening should indicate the status of your rear-seat side airbags. If you are uncertain of their status, or wish to have the airbags activated or deactivated, please contact your BMW center.◀

Even when all these guidelines are observed, there is still a small residual risk of injuries to the face, hands and arms occurring from airbag deployment in isolated instances.

The ignition and inflation noise may provoke a mild temporary hearing loss in extremely sensitive individuals.

Airbag warning information is also provided on the sun visors.

CarManuals2.com

This is the right way a child should sit in a child-restraint when rear side airbags, see arrow, are provided.

This is the right way a larger child should sit wearing the seat belt when rear side airbags, see arrow, are provided.

Indicator lamp

The indicator lamp indicates the operational status of the airbag system when the ignition key is in position 1 or higher.

System operational:

▷ The indicator lamp comes on briefly when the ignition key is turned to position 1 or higher.

System malfunction:

▷ Indicator lamp does not come on or
▷ indicator lamp lights up continuously.

Online Edition for Part-No. 01 41 0 156 854 - © 09/02 BMW AG

If there is a system malfunction, there is a risk that the airbags will not be triggered within their normal response range, even if the level of impact would normally have triggered them.

Have your BMW center inspect the system immediately.

CarManuals2.com

Leave the rear safety belts in the holders if they are not needed to avoid unwanted movement from the safety belts at high speeds.◀

Commercially available child seats complying with the legal standard are designed to be secured with a seat belt or with the seat belt portion of a combination lap/shoulder belt. Improperly or inadequately installed restraint systems can increase the risk of injury to children. Always read and follow the instructions that come with the system.

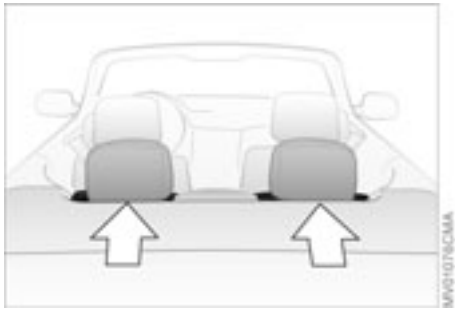

Child-restraint system with tether strap

If you use a child-restraint system with a tether strap, two additional tether anchorage points have been provided – refer to the arrows in the illustration.

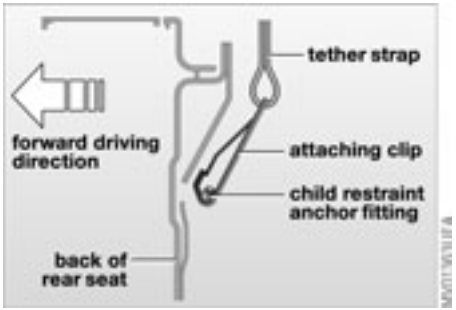

Depending on the location selected for seating in the rear passenger area, attach the tether strap to the corresponding anchorage point to secure the child-restraint system, as shown in the illustration.

1. Open the convertible top compartment lid, refer to page 41
2. Lift the headrest and pass the tether strap between the headrest and the seat back. It is recommended that you return the head restraint back to its lowest possible position
3. Adjust the tether strap according to the child-restraint manufacturer's instructions
4. Close the convertible top compartment panel.

It is recommended to cover the child-restraint attaching clip with a soft material to prevent damage to the stored soft top.

Should a hard top be installed, the fitting of child harness tether strap/s – if child seat is required – is necessary before installation of the hard top.◀

Before installing any child-restraint device or child seat, please read the following:
Never install a rearward-facing child-restraint system in the front passenger seat of this vehicle.
CarManuals2.com
Your vehicle is equipped with an airbag supplemental restraint system for the front passenger. Because the backrest on any rear-facing child-restraint system – of the kind designed for infants under 1 year and 20 lbs/9 kg – would be within the airbag's deployment range, you should never mount such a device in the front passenger seat, as the impact of the airbag against the child-restraint's backrest could lead to serious or fatal injuries.
If it is necessary for a child – not an infant – to ride in the front seat, certain precautions should be taken. First, move the passenger seat as far away from the instrument panel as possible. This important precaution is intended to maximize the distance between the airbag and the child. Older children

should be tightly secured with the safety belt after they have outgrown a booster seat that is appropriate for their age, height, and weight.
Younger children should be secured in an appropriate forward-facing child-restraint system that has first been properly secured with a safety belt.
Never install a rearward-facing child-restraint system in the front passenger seat.
We strongly urge you to carefully read and comply with the instructions for installation and use provided by the child-restraint's manufacturer whenever you use such a device.
Do not attempt to modify child-restraint systems. If you do this, the protection provided by these systems could be impaired.
Be sure that all occupants – of all ages – remain properly and securely restrained at all times.◀

All rear seating positions in your vehicle meet the recommendations of SAE J1819, an industry-recommended practice for securing child-restraint systems in motor vehicles.

Securing child-restraint system

All of the rear belt retractors and the front passenger's safety belt can be locked for mounting and securing child-restraint systems.

CarManuals2.com

A label with the appropriate instructions for this is located in the immediate vicinity of the buckle latch of each safety belt.

To lock the safety belt

Extract the entire length of the belt from the inertia reel mechanism. Allow the reel to retract the belt somewhat and engage the buckle, then tighten the belt against the child-restraint system. The retraction mechanism is now locked.

The belt cannot be extracted further. Always observe the installation instructions provided by the manufacturer of the child-restraint system.

To unlock the safety belt

Release the safety belt, remove the child seat and retract the safety belt to its end position on the belt retractor.

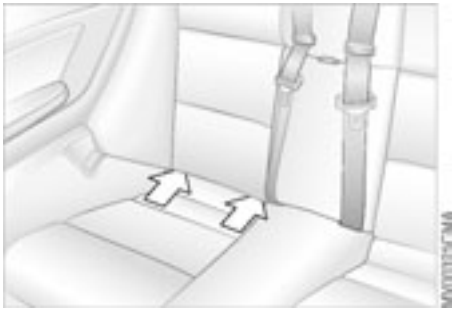

LATCH child-restraint mounting system

LATCH: Lower Anchors and Tether for CHildren

Canadian models only:

The LATCH anchorage points are identified by buttons.

The left and right rear seats are both equipped with a LATCH child-restraint mounting system.

The anchorage points for the LATCH child-restraint system installation are located behind the upholstery at the positions indicated by the arrows.

Carefully slide the brackets through the gaps in the upholstery at the indicated locations.

CarManuals2.com

Always follow all manufacturer's instructions and observe all safety precautions when installing the LATCH child-restraint mounting system.
Leave the rear safety belts in the holders if they are not needed to avoid unwanted movement from the safety belts at high speeds.◀

To prevent damage to the upholstery, you can purchase an insertion aid* from your BMW center.

Firmly press the insertion aid into the gap between the seat cushion and backrest, continuing until the two guides snap into place on the LATCH brackets in the seat.

The illustration is an example showing the anchorages for a LATCH child-restraint system on the right rear seat.

Rollover protection system

In the event of an accident or some other critical driving situation – extreme tilting in the longitudinal or transverse axis, loss of contact with the ground – the rollover protection system will be automatically activated. The protective bars located in the rear head restraints extend within fractions of a second.

In addition to the integrated rollover bar in the windshield frame, the rollover protection system affords all the vehicle occupants necessary headroom.

Always keep the travel path for the rollover protection system free and clear. Under no circumstances should you cover the head restraints. In the event of less serious accidents, the safety belt will protect you and, depending on the severity of the accident, so will the safety belt tensioner and the multi-stage airbag restraint system as well.◀

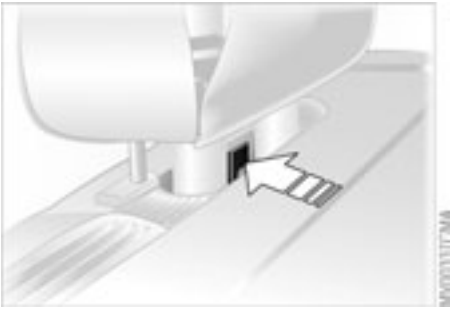

If, after being automatically triggered, the protective function is not needed, then the rollover protection system can be lowered back into place. No special tool is needed for this.

1. Using a screwdriver from the on-board tool kit, remove the cover panel; to do this, position the screwdriver under the notch – see arrow
2. Pull up on the lever toward the front of the vehicle – see arrow – and keep it in this position

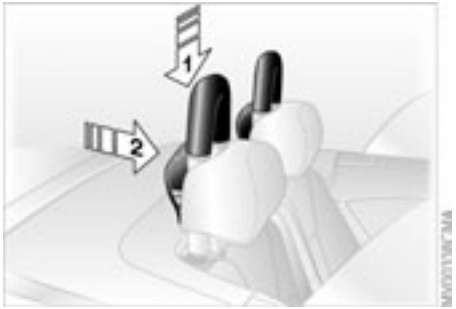

3. Keep pressing down on the protective bar from on top – see arrow 1 – until you hear it click into place
4. Put the cover panel back in place and press down firmly
5. Push the back panel of the head restraint closed – see arrow 2.

Do the same for the second protective bar. If you are not familiar with any of the procedures, consult your BMW center.

Have the rollover protection system checked out by your BMW center after it has been inadvertently triggered.

Do not move the convertible top under any circumstances if the rollover protection system has extended.
Do not use the rear head restraints as storage shelves.
Absolutely no modifications are to be made to any of the rollover protection system's individual components or any of its wiring.
Only your BMW center is to carry out any work on the rollover protection system.
Work done on the system that is carried out improperly could lead to failure in an emergency or accidental airbag activation.
Regarding having the system checked to ensure long-term operation: be scrupulous in adhering to the Service Interval Display for maintenance intervals.
Every two years at the latest, the rollover protection system must be inspected by a BMW center.◀

CarManuals2.com

How the system functions

You have probably frequently wished that you could configure individual functions of your vehicles to reflect your own personal requirements. In engineering your vehicle, BMW has provided for a number of options for personal adjustment that can be programmed into your vehicle at your BMW center.

The available configuration data fall into two categories, according to whether their primary orientation is the vehicle – Vehicle Memory – or the individual – Key Memory. You can have up to four different basic settings adjusted for four different persons. The only requirement is that each person uses his or her own remote control key.

When your vehicle is unlocked with the remote control, the vehicle recognizes the individual user by means of a data exchange with the key, and makes adjustments accordingly.

In order for you to distinguish between different keys, colored decals are supplied together with the keys.

What the system can do

Your BMW center can provide you with details on the possibilities that the Vehicle and Key Memory systems offer.

Examples for Vehicle Memory:

- ▷ Various signals that can serve as acknowledgment for locking and unlocking the vehicle, refer to page 31
- ▷ Activates/deactivates the Follow me home lamps function, refer to page 92
- ▷ Activates/deactivates daytime driving lamps, refer to page 92
- ▷ Sets the units of measure for displaying time, outside temperature, distance traveled and fuel consumption in the instrument cluster.
- ▷ Indicates via an acoustic tone that PDC has been activated, refer to page 86
- ▷ Switches on rear window defroster automatically, refer to page 99
- ▷ After giving an ice warning, the display returns to the previous setting, refer to page 84.

Examples for Key Memory:

- ▷ Locks the vehicle automatically after you start off, refer to page 34
- ▷ Automatically moves the seat and outside mirror into position for the programmed driver when unlocking the vehicle, refer to page 53
- ▷ Automatic tilting of the passenger-side mirror, refer to page 54
- ▷ After the engine is started, calls up the last selected driving program for each shifting mode, refer to page 74.

You will see this symbol throughout the Owner's Manual. It is to remind you at appropriate places of the settings that available to you.◀

CarManuals2.com

Ignition lock

CarManuals2.com

Ignition key positions

0 Steering locked

1 Steering unlocked

2 Ignition switched on

3 Starting engine

Steering locked

The key can be inserted or removed in this position only.

After removing the key, turn the steering wheel slightly to the left or right until the lock engages.

If the key is not removed, an acoustic signal is sounded after the driver's door has been opened.

Once the ignition has been switched off, ignition key in position 0 or removed, the radio functions are still available for approx. 20 minutes. Turn the radio back on to use it.

Steering unlocked

You will find that it is often easier to turn the ignition key from position 0 to position 1 when you move the steering wheel slightly to help disengage the lock.

Individual electrical accessories are ready for operation.

Do not allow the engine to warm up by leaving it running while the vehicle remains stationary. Instead, drive off immediately at a moderate engine speed.◀

Do not allow the engine to run in enclosed spaces. Otherwise, breathing the exhaust fumes can lead to unconsciousness and death. The exhaust gases contain carbon monoxide, an odorless and colorless, but highly toxic gas. Do not leave the vehicle unattended with the engine running. An unattended vehicle with a running engine represents a safety hazard.◀

If the engine does not start on the first attempt, such as when it is very hot or cold:

▷ Press the accelerator pedal halfway down while engaging the starter.

Cold starts at very low temperatures below about 5 °F/–15 °C and at high altitudes above 3,300 ft/1,000 m:

▷ On the first start attempt, it may be necessary to engage the starter for a longer period, but no longer than 20 seconds.

Extended starting attempts, characterized by excessively frequent or long periods with the starter engaged, can damage the catalytic converter.◀

When driving, standing at idle, and parking the vehicle, take care to avoid contact between the hot exhaust system and flammable materials – grass, hay, leaves, etc. Such contact could lead to a fire, resulting in serious personal injury and property damage.◀

Manual transmission

1. Engage the parking brake
2. Gearshift lever in idling position
3. Press the clutch pedal at low temperatures
4. Start the engine. Do not press the accelerator pedal. Do not actuate the starter for too short a time. Do not turn it for more than approx. 20 seconds. Release the ignition key immediately when the engine starts.

Sequential M gearbox SMG II

1. Depress footbrake
2. Move selector lever into position 0
3. Start the engine. Do not actuate the starter for too short a time. Do not turn it for more than approx. 20 seconds. Release the ignition key immediately when the engine starts
4. Engage a driving position
5. Release footbrake and slowly depress accelerator pedal.

With the engine running, the gear indicator in the SMG display flashes to indicate that a driving position is engaged with the driver's door open or if the hood is not closed properly, refer to page 72.
If none of the pedals is actuated, then the gearbox is automatically taken out of gear after approx. 4 seconds. Then the desired direction of travel must be selected again with the selector lever in position 0. Driving off is not possible with the hood open.◀

Before exiting the vehicle with the engine running, move the selector lever into position 0 and apply the parking brake.
Never leave the vehicle unattended with the engine running. An unattended vehicle with a running engine represents a safety hazard.◀

CarManuals2.com

Engine idle speed is controlled by the engine computer system. Increased speeds at start-up are normal and should decrease as the engine warms up. If engine speed does not decrease, service is required.

To prevent the battery from discharging, always deactivate electrical devices that are not in use. Switch the ignition off when the vehicle is not being driven.

CarManuals2.com

Switching off the engine

You should never remove the ignition key when the vehicle is in motion, as the steering lock could engage.
When you leave the vehicle, always remove the ignition key and engage the steering lock.◀

Always engage the parking brake when parking on downhill roads. Engaging a gear may not sufficiently secure the vehicle against rolling.◀

Manual transmission

Turn the ignition key to position 1 or 0.

Sequential M gearbox SMG II

If you turn the ignition key to position 1 or 0 with the selector lever in the forward or reverse position, a gear automatically remains engaged.

If you turn the ignition key to position 1 or 0 with the selector lever in position 0, a warning tone and the flashing gear indicator in the SMG display remind you that the vehicle is not secured against rolling.

The warning stops after approx. ten seconds. If you move the selector lever into a forward or reverse position during this time, a gear is automatically engaged.

CarManuals2.com

Parking brake

The parking brake is designed primarily to prevent the vehicle from rolling when it is parked. It operates against the rear wheels.

To engage

The detent engages automatically, and the indicator lamp in the instrument cluster comes on when the ignition key is in position 2, refer to page 18.

To release

Pull up slightly on the lever, press the button – see arrow – and lower the lever.

Parking brake

If exceptional circumstances make it necessary to engage the parking brake while the vehicle is in motion, do not pull it with excessive pressure. Keep your thumb pressed against the release button while carefully pulling the lever up.
Excessive pressure can lead to overbraking and loss of traction – fishtailing – at the rear axle.
The brake lamps do not come on when the parking brake is engaged.
Always engage the parking brake when parking on downhill roads. Engaging a gear may not sufficiently secure the vehicle against rolling.◀

To avoid corrosion and one-sided braking, apply the parking brake lightly from time to time when coasting to a standstill – at a traffic signal, for example – provided that it is safe to do so.◀

Manual transmission

CarManuals2.com

When shifting gears in the fifth/sixth gear plane, be sure to press the gearshift lever to the right in order to prevent inadvertent selection of a gear in the third/fourth gear plane.
Do not hold the vehicle in place on slopes by slipping or "riding" the clutch. Use the parking brake instead. Riding the clutch causes the clutch assembly to wear out sooner.◀

Reverse

Select only when the vehicle is stationary. Press the shift lever to the left to overcome the resistance.

As you do this, the backup lamps will light up automatically when the ignition key is in position 2.

The concept

The sequential M gearbox SMG II is an automated manual gearbox with which clutching and shifting is assumed by an electro-hydraulic system.

The SMG II is operated via two shift paddles on the steering wheel and the selector lever in the center console.

It offers the following functions:

- ▷ Sequential and automated shifting mode
- ▷ Ability to choose between different driving programs, Drivelogic
- ▷ Gradient assistance, refer to page 74
- ▷ Upshift display and shift lights, refer to page 75
- ▷ RPM matching on downshifts
- ▷ Driving dependent functions:
  The respective driving situation, e.g. cornering, mountain driving or braking, is detected by sensors and taken into account for shifting, e.g. to achieve optimum gear selection during deceleration and subsequent acceleration
- ▷ Slip recognition at the rear axle for increasing driving stability, e.g. during downshifting on slippery road surfaces
- ▷ Operating safety through protection against misshifting.

Under normal operating conditions, fuel consumption is lowest when driving in the first driving program of the automated shifting mode.

CarManuals2.com

Selector lever position

R: Reverse position

0: Position 0 (Neutral)

Forward position with one-touch mode:

- ▷ S: sequential mode
- ▷ A: automated mode
- ▷ +: upshifting in sequential mode
- ▷ –: downshifting in sequential mode.

The SMG II is ready for operation from ignition key position two or higher.

For your safety, it is only possible to engage a driving position with the vehicle stopped approx. 2 seconds after engaging position 0 with the footbrake depressed – Shiftlock function.

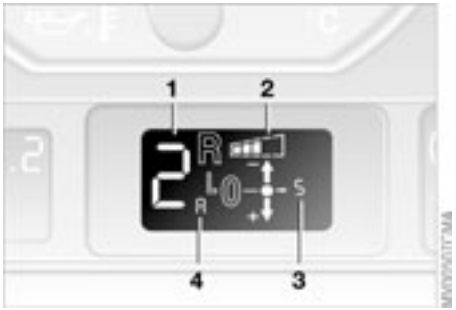

Display in instrument cluster

The selector lever position, currently engaged gear and selected driving program are displayed in the instrument cluster.

1 Engaged gear

2 Selected driving program, corresponds to the number of illuminated fields, refer to page 74

3 Tapping the selector lever to the right switches over into the displayed shift mode

4 "A" indicates an activated automated shift mode

R – Reverse position

Only engage with the vehicle stopped or at low speed, e.g. for rocking free in deep snow.

An intermittent signal tone indicates that the reverse position has been engaged.◀

0 – Position 0 (Neutral)

Always engage before starting the engine.

If the driving situation requires, e.g. when downshifting on slippery roads, the SMG II automatically disengages and reengages the clutch, i.e. it is not necessary to manually engage position 0.

CarManuals2.com

S – Sequential mode

In the sequential mode all forward gears are to be shifted by the driver.

Changeover from automated to sequential mode:

▷ Tap the selector lever to the right toward S or

▷ Change gears with the selector lever or the shift paddles on the steering wheel.

You do not need to reduce the throttle for shifting.

Shifting gears with shift paddles on steering wheel:

▷ To upshift, briefly pull the right paddle +

▷ To downshift, briefly pull the left paddle –.

Shift paddles with various widths matched to the shape of your hand are available from your BMW center.◀

Shifting gears with selector lever:

▷ To upshift, pull the selector lever backward +

▷ To downshift, push the selector lever forward toward –.

No automatic upshifting is carried out in the sequential mode.

You accelerate from higher gears, e.g. during passing, by manually downshifting.

In the following situations the SMG II helps you think in the sequential mode:

▷ Upshifts and downshifts are only executed when the new gear will provide a suitable combination of vehicle and engine speed, i.e., downshifts that would cause the engine to overrev will not be executed

▷ During a stop the gearbox is automatically downshifted into the first gear so that, e.g. before a traffic light, it is only necessary to accelerate to continue driving

▷ When the speed is reduced, the gearbox is automatically downshifted shortly before a gear-dependent minimum speed is reached without you taking any action.

CarManuals2.com

A – Automated mode

Each time the engine is started, the automated mode is activated as soon as you move the selector lever into the forward driving position.

In the automated mode all forward gears are automatically shifted.

Changeover from sequential to automated mode: tap the selector lever to the right toward A. Watch the display in the instrument cluster, refer to page 72.

For rapid acceleration, e.g. during passing, depress the accelerator pedal completely – kickdown. The gearbox now downshifts in dependence on the selected driving program.

Even in the automated mode, you can help specify the shifting point: if a gear-dependent minimum speed is exceeded, you can upshift by slowly reducing pressure on the accelerator pedal. In the process, the respective driving situation is detected by sensors and taken into account.

Drivelogic

Drivelogic makes various driving programs available to you.

Press the Drivelogic repeatedly until the desired driving program is shown in the SMG display of the instrument cluster, refer to page 72.

In the automated mode you can select from five driving programs ranging from convenience mode/winter operation to sporty and highly dynamic.

In the first automated driving program, starting off takes place in second gear, which is advisable under winter road conditions with ice and snow.

In the sequential mode you can choose from six driving programs ranging from balanced, dynamic driving – 1 – to sporty, puristic driving – 6. The sporty, puristic driving program can only be activated with the Dynamic Stability Control (DSC) deactivated, refer to page 87.

To maintain vehicle stability, always drive with the DSC activated on whenever possible.◀

Following each change between the sequential and the automated mode, the last driving program selected in the respective mode is active. Exception: instead of the last selected sequential driving program 6, program 5 is activated only after the engine has been started again.

CarManuals2.com

Your vehicle is set so that when the engine is started, the last selected driving program saved in your key is activated for each shifting mode.◀

Gradient assistance

The gradient assistance enables starting off on grades with virtually no rollback. It can be activated in the sequential and automated mode with the vehicle stopped and can be used for both forward and reverse driving.

The vehicle may roll slightly before it is held by the gradient assistance after releasing the footbrake. Two seconds after the footbrake is released, the vehicle begins to roll, as it is no longer held with the gradient assistance.◀

1. Depress footbrake with vehicle stopped
2. Activate the gradient assistance by pulling the left paddle for at least 0.5 seconds. An increase in the engine speed indicates that the gradient assistance is activated

Briefly pulling the left paddle again deactivates the gradient assistance again.◀

3. Release the footbrake and start off within two seconds.

The gradient assistance must be reactivated before each use.

Indicator lamp

The transmission indicator lamp in the instrument cluster goes out after the engine is started.

▷ If it does not go out, or if it lights up during driving, a fault has occurred. The available functions may be limited under certain circumstances. Drive carefully and with the Dynamic Stability Control (DSC) activated. Have the system checked by the nearest BMW center

▷ If the indicator lamp flashes while driving, the system is overloaded. Avoid high loads until the indicator lamp goes out again permanently.

Shift lights

To achieve the best possible vehicle acceleration with a sporty driving style in the sequential mode, shift lights in the instrument cluster indicate the optimum shifting point shortly before the maximum engine speed is reached.

1. When the maximum engine speed is approached, yellow indicator fields, shift lights, in the tachometer light up consecutively to indicate the approaching upshift time
2. Shift at the latest when the last indicator field lights up red.

Tire replacement, snow chains

Following a tire or wheel change and after mounting or removing snow chains, the slip recognition of the SMG II must become familiar with the changed condition.

Reinitialize the system afterwards:

1. Move the selector lever into position 0 on a straight stretch of road at a speed of over 20 mph / 30 km/h
2. Pull both shift paddles for approx. two seconds.

If you do not carry out the initialization, the system automatically learns the changed condition gradually during driving. This can become apparent due to brief opening and closing of the clutch.

CarManuals2.com

Turn signal indicator/Headlamp flasher

CarManuals2.com

1 High beams – blue indicator lamp
2 Headlamp flasher – blue indicator lamp
3 Turn signal indicator – green indicator accompanied by periodic clicking sound from the relay

To signal briefly

Press the lever up to but not beyond the resistance point. It then returns to the center position when released.

If the flashing indicator lamp and the clicking from the relay are both faster than normal, one of the turn signal indicators has failed.◀

0 Wipers retracted

1 Intermittent operation or rain sensor

2 Normal wiper speed

3 Fast wiper speed

4 Brief wipe

5 Rotary dial for control of the wipe interval or the sensitivity of the rain sensor

Intermittent mode

Not on vehicles with rain sensor.

You can set the wipe interval at four stages with rotary dial 5. In addition, the wipe interval is varied automatically depending on road speed.

Rain sensor

CarManuals2.com

The rain sensor is positioned on the windshield, directly behind the interior rearview mirror.

To activate the rain sensor:

▷ With the ignition key in position 1 or higher, move the lever to position 1. The wipers travel once across the windshield, regardless of the weather

▷ You can leave the lever permanently in position 1. It is then only necessary to activate the rain sensor when the ignition key is in position 1 or higher. Activate by briefly turning rotary dial 5.

To adjust the sensitivity of the rain sensor: turn rotary dial 5.

To deactivate the rain sensor: put lever in position 0.

⚠ Turn the rain sensor off in automatic car washes. Failure to do so could result in damage caused by undesired wiper activation.◀

Normal wiper speed

When the vehicle is stationary, the wipers switch automatically to intermittent wipe – not on vehicles with rain sensor.

Fast wiper speed

When the vehicle is stationary, the wipers operate at normal speed – not on vehicles with rain sensor.

Washer/wiper system/Rain sensor*

0 Wipers retracted

1 Clean windshield and headlamps

Clean windshield and headlamps*

Do not use the washers if there is any danger that the fluid will freeze on the windshield, as your vision could be obscured. Always use a windshield washer antifreeze in cold weather. Refer to page 124.
Do not use the washers when the reservoir is empty. This could cause damage to the washer pump.◀

The system sprays washer fluid against the windshield and activates the wipers for a brief period.

When the vehicle's lighting system is switched on, the headlamps will also be cleaned at reasonable intervals.

Windshield washer nozzles

The windshield washer jets are warmed automatically when the ignition key is in position 2.

CarManuals2.com

Cruise control

Starting at about 20 mph / 30 km/h, you can maintain and store any vehicle speed that you specify.

The cruise control is operational whenever the engine is running and the system has been activated.

To activate the system

With the ignition key in position 2 or higher:

Press the button. The indicator lamp in the instrument cluster comes on, refer to page 20. You can now use the cruise control.

Do not use cruise control on twisting roads, when high traffic density prevents driving at a constant speed, or when the road surface is slick – snow, rain, ice – or loose – rocks or gravel, sand.◀

To deactivate the system

Press button as often as you need to until the indicator lamp in the instrument cluster goes out.

Online Edition for Part-No. 01 41 0 156 854 - © 09/02 BMW AG

Cruise control is also deactivated when the ignition key is in position 0.

The speed stored in memory is deleted.

To store and maintain speed or to accelerate

Press button "+" briefly:

The system stores and maintains the current vehicle speed. Every time you tap the button, the speed increases by 0.6 mph / 1 km/h.

Press and hold button "+":

The vehicle accelerates without pressure on the accelerator pedal. When you release the button, the system stores and maintains the current speed.

If on a downhill gradient the engine braking effect is not sufficient, the controlled speed can be exceeded. Speed can drop on uphill grades if the engine output is insufficient.◀

To decelerate

Press button "–" briefly:

When cruise control is active, every tap of the button reduces the speed by approx. 0.6 mph / 1 km/h.

Press and hold button "–":

With the cruise control active, the system automatically reduces the throttle opening to slow the vehicle. When you release the button, the system stores and maintains the current speed.

To interrupt the cruise control

CarManuals2.com

Each time zou activate the system, press the button. The indicator lamp stays on. You can use the cruise control again whenever you want by calling up the speed that was stored last.

In addition, cruise control is interrupted automatically:

- ▷ If the brakes are applied
- ▷ When pressing down the clutch pedal
- ▷ If you exceed or fall below the programmed speed for an extended period – by depressing the accelerator, for example
- ▷ Sequential M gearbox SMG II, refer to page 71: when shifting in the sequential mode.

To recall the stored setting

Press button:

The vehicle accelerates to and maintains the last speed stored.

Odometer

1 Odometer

2 Trip odometer

Odometer

You can activate the displays shown in the illustration with the ignition key in position 0 by pressing the left button, see arrow, in the instrument cluster.

Trip odometer

To reset the trip odometer to zero, press the left button – see arrow – with the ignition key in position 1 or higher.

Tachometer

CarManuals2.com

Variable pre-warning zone

The yellow pre-warning zone displays current permissible engine speeds, depending on the engine temperature. As the engine temperature climbs, some of the sectors for this pre-warning zones will go out one after the other.

Avoid engine speeds in the early warning zone if possible.

Never allow the engine to operate with the needle in the red overspeed zone of the gauge.

To protect the engine, the fuel supply is interrupted when you approach this sector.

Temperature gauge

The general operating temperature lies between 175 °F/80 °C and 250 °F/120 °C. During high-performance driving, do not exceed a maximum value of 300 °F/150 °C.

Online Edition for Part-No. 01 41 0 156 854 - © 09/02 BMW AG

Fuel gauge

Once the indicator lamp stays on continuously, there are still approx. 2 gallons/8 liters of fuel in the fuel tank.

Fuel tank capacity approx. 16.6 gal./ 63 liters.

If the tilt of the vehicle varies – when you are driving in mountainous areas, for example – the needle may fluctuate slightly.

⚠ Fill the fuel tank before it is completely empty. Driving to the last drop of fuel can prevent the engine from operating properly and result in damage.◀

When you switch on the ignition, the indicator lamp lights up briefly as an operation check.

Engine coolant temperature gauge

Blue

The engine is still cold. Drive at moderate engine and vehicle speeds.

Red

When you switch on the ignition, the warning lamp comes on briefly as an operation check.

If the lamp comes on while operating the vehicle: the engine has overheated. Switch off the engine immediately and allow it to cool down.

To check the coolant level, refer to page 126.

Between the blue and red zones

Normal operating range. The needle may rise as far as the edge of the red sector during normal operation.

CarManuals2.com

Service interval display

A flashing message and a "–" in front of the number mean that the service interval has already been exceeded by the distance shown on the display. Please contact your BMW center for an appointment.

Remaining distance to next service

The displays shown in the illustration appear for a few seconds when the ignition key is in position 1 or higher or after the engine is started.

The next service due appears with the message OIL SERVICE or INSPECTION, together with the distance remaining in miles – in kilometers in Canada – before the next scheduled service.

The computer bases its calculations of the remaining distance on the preceding driving style.

Check Control

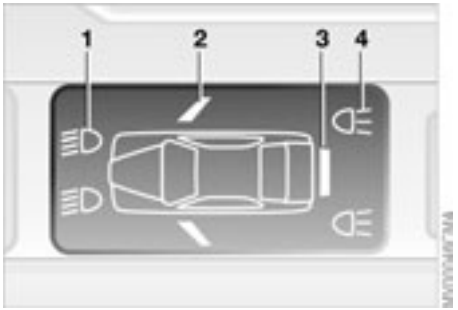

Display

When the ignition key is in position 2 or higher, the following information or conditions are displayed until the cause has been corrected:

1 Inspect the low-beam and high-beam headlamps, as well as the parking lamps

2 Door open

3 Luggage compartment lid open

4 Check brake and tail lamps

When you open the driver's door after completing a journey, an acoustic warning signal will sound if you have forgotten to turn off the headlamps.

CarManuals2.com

Clock

If you wish to have a permanent time display, you can make this adjustment in the car radio* display, refer to the Owner's Manual for Radio.

You can set the time of day, and the display for the car radio, as follows.

To adjust

When the ignition key is in position 1 or higher, the time of day appears in the display.

To set ahead: turn the right button to the right.

To set back: turn the right button to the left.

The adjustment speed will increase the longer you continue to hold the right button.

To change the display mode: press the right button briefly.

Every time you press the knob, the clock display alternates between the 12-hour and 24-hour mode.

In ignition key position 0: the time is displayed for a few seconds after you press the left button, refer to Odometer on page 80.

CarManuals2.com

After giving an ice warning, the display returns to the previous setting.◀

The ice warning does not alter the fact that surface ice can form at temperatures above 37.5 °F/+3 °C, on bridges or shaded road surfaces, for instance.◀

Mode selection

With the ignition key in position 1 and higher, you can use the button in the turn signal lever to retrieve information from the computer for display in the instrument cluster. Each time you press the button briefly in the direction of the steering column, a new function is called up in the display.

The displays appear in the following order:

Time of day, outside temperature, average fuel consumption, cruising range, average vehicle speed.

When the ignition key is in position 1 or higher, the last active setting is displayed.

Outside temperature

You can change the units of measure – °C/°F – for the outside temperature display by pressing the right-hand reset button in the instrument cluster while the temperature display is active. The units of measure – °C/°F – in the temperature display of the automatic climate control change automatically, refer to page 96.

Ice warning

If the outside temperature drops to about 37.5 °F/+3 °C, then the computer will automatically switch to a display of the outside temperature. In addition, a signal sounds as a warning and the display flashes for a brief period.

Online Edition for Part-No. 01 41 0 156 854 - © 09/02 BMW AG

Average fuel consumption

If you continue to press and hold the button on the turn signal lever, the average fuel consumption being displayed is recalculated from that point.

If you wish, you can have the average fuel consumption displayed in a different unit of measure.◀

Range

The computer bases its calculations of the cruising range on the preceding driving style and on the remaining fuel in the tank.

It is important that you refuel when the cruising range falls below approx. 35 miles/50 kilometers. Otherwise, the engine cannot be guaranteed to operate properly and damage may result.◀

CarManuals2.com

Average speed

If you continue to hold the button on the turn signal lever, the average fuel consumption being displayed for that speed is recalculated from that point in time.

Any time spent when the vehicle is stationary and the engine is shut off is ignored for the calculation.

The concept

PDC assists you when you back into a parking space. Acoustic signals alert you to the momentary distance to an object behind your vehicle. To do this, four ultrasonic sensors in the rear bumper measure the distance to the nearest object. The range for the sensors located at both rear corners ends approx. 2 ft/60 cm behind the bumpers. The range for the two middle sensors is slightly less than 5 ft/1.50 m.

PDC is a parking aid that can identify objects if they are approached slowly, as is generally the case when parking. Avoid driving towards objects rapidly; due to underlying physical principles, the system may otherwise alert you too late for you to take evasive steps.◀

The system is activated automatically about one second after you engage reverse with the ignition key in position 2.

Let this short period elapse before driving backwards.◀

PDC is deactivated when you shift back out of Reverse.

You can have a signal set to confirm that the PDC has been activated.◀

CarManuals2.com

Acoustic signals

The distance to the nearest object is indicated by a tone sounding at various intervals. As the distance between vehicle and object decreases, the intervals between the tones become shorter. A continuous tone indicates the presence of an object less than 1 ft/30 cm away.

The warning signal is canceled after approx. three seconds if the distance to the object remains constant during this time – if you are moving parallel to a wall, for instance.

System malfunctions will be indicated by a continuous high-pitched tone when the system is activated the first time. Please have your BMW center resolve the problem.

PDC does not remove the driver's personal responsibility for evaluating the distance between the vehicle and any objects. Even when sensors are involved, there is a blind spot in which objects cannot be detected. This applies especially in those cases where the system approaches the physical limits of ultrasonic measurement, as occurs with tow bars and trailer couplings, and in the vicinity of thin or wedge-shaped objects. Moreover, low objects that have already been detected – such as a curb edge – can disappear out of the detection range of the sensors before a continuous tone sounds.
Loud sources of sound from outside or inside the vehicle could drown out the PDC signal tone.◀

Keep the sensors clean and free of ice or snow in order to ensure that they will continue to operate effectively.
Do not apply high pressure spray to the sensors for a prolonged period of time. Always maintain a distance of more than 4 in/10 cm.◀

Online Edition for Part-No. 01 41 0 156 854 - © 09/02 BMW AG

The concept

DSC maintains vehicle stability, even in critical driving situations.

The system optimizes vehicle stability during acceleration and when starting from a full stop, as well as optimizing traction. In addition, it recognizes unstable vehicle conditions, such as understeering or oversteering, and, within physically feasible limits, helps keeping the vehicle on a steady course by reducing the engine speed and brake applications to the individual wheels.

The system starts up automatically each time you start the engine.

The laws of physics cannot be repealed, even with DSC. The results of driving irresponsibly rest with the driver. We therefore urge you to avoid using the additional safety margin of the system as an excuse for taking risks. Do not make any modifications to the DSC system. Allow only authorized technicians to perform service procedures on the DSC.
At first, you may need some time to become accustomed to this system's intervention. However, it guarantees optimum drive force and at the same time, the best possible vehicle stability.◀

Indicator lamp

The indicator lamp in the instrument cluster will go out shortly after the ignition has been switched on, refer to page 19.

▷ Indicator lamp flashes: the system is active and is controlling the drive torque based on driving conditions
▷ If the indicator lamp fails to go out after the engine has been started, or if it comes on during normal driving and stays on: the system has been deactivated via the button or is defective. You can continue to drive the vehicle normally, but without DSC. Please consult your BMW center for repairs.

CarManuals2.com

To deactivate the system

Press the button; the indicator lamp comes on and stays on.

The vehicle does not execute the stability-enhancement and traction-control functions when DSC is deactivated.

We recommend that you deactivate the system for increased traction:

▷ When rocking the vehicle or starting off in deep snow or on loose surfaces
▷ When driving with snow chains
▷ When driving on snow-covered grades, in deep snow, or on a snow-covered surface that has been packed down from being driven on.

To maintain vehicle stability, always drive with the system switched on whenever possible.◀

To reactivate the system

Press the button again; the indicator lamp goes out.

CarManuals2.com

Dynamic Brake Control (DBC)

DBC is an integral component of the DSC system.

If you apply the brakes rapidly, this system automatically generates maximum braking force boost and thus helps to achieve the shortest possible braking distance in panic braking situations. All of the benefits of the ABS system are exploited under these circumstances.

Do not reduce the pressure on the brake pedal for the duration of the brake application. When the brake pedal is released, the DBC is deactivated.

Flat Tire Monitor

The concept

As you drive, the Flat Tire Monitor keeps track of pressure levels in all four tires. The system detects whenever the inflation pressure in a tire drops off significantly.

Controlling the tire pressure is based on monitoring the rpm that the tires have relative to each other. A flat tire is detected and reported because the rpm suddenly deviate drastically from one another.

Online Edition for Part-No. 01 41 0 156 854 - © 09/02 BMW AG

CarManuals2.com

4. After a few minutes, the Flat Tire Monitor will accept the current inflation pressure as the value to be measured against, and from that point on can detect and report a flat tire.

Initializing the system

Initializing is necessary to familiarize the system with the correct inflation pressures.

Repeat this process after any changes in tire inflation pressure, tire rotation or replacement.

1. Check the tire inflation pressures in all the tires, comparing them with the inflation pressure table, refer to page 25, and adjust them if necessary
2. Turn the ignition key to position 2
3. Press button as long as you need to until the indicator lamp in the instrument cluster lights up. After a little while, the indicator lamp will go out by itself

To activate/deactivate the system

The system is automatically activated in ignition key position 2 and consequently is on whenever the vehicle is operated.

To deactivate the system: tap the button, the indicator lamp will light up yellow.

To activate the system: tap the button again; the indicator lamp goes out.

Deactivate the system when snow chains are mounted, since false warnings and undetected losses in pressure are possible under these kinds of conditions.

Flat tire

The red warning lamp in the instrument cluster lights up to warn of pressure loss and tire failure. In addition, an acoustic signal is sounded. To come to an immediate stop, reduce speed, while avoiding any sudden, jerky braking or steering maneuvers.

Fix the flat tire using the M Mobility system, refer to page 139.

To reset the indicator lamp: the red indicator lamp has to be switched off manually after putting on a new wheel. At this point, hold the Flat Tire Monitor button down until the indicator lamp goes out. Reinitialize the system afterward.

The Flat Tire Monitor cannot provide you with advance warning of sudden and severe tire damage caused by external factors.
Another factor which the Flat Tire Monitor does not recognize is the balanced and very gradual pressure loss that takes place in all tires over an extended period of time.◀

Check tire inflation pressures on a regular basis, correcting them as necessary, refer to page 25.
Under certain circumstances, there may be false warnings or a delayed detection of losses in pressure when driving on snow-covered or slippery road surfaces.
Performance-oriented driving – slip at the drive wheels and high levels of lateral acceleration – can also delay the appearance of status reports in the Flat Tire Monitor's display panel.◀

System malfunctions

As long as there is still a malfunction, the indicator lamp in the instrument cluster will stay lit up yellow.

Please contact your BMW center for additional information.

CarManuals2.com

The system – Sport mode – will cause the engine to respond more spontaneously to any motion of the accelerator pedal.

Activating/deactivating Sport mode

Activating: with the ignition key in position 2, press the SPORT button. The indicator lamp will come on.

⚠ Each time you activate the system, the vehicle may gain speed without any additional pressure on the accelerator pedal.◀

Deactivating: press the SPORT button again; the indicator lamp will go out.

The Sport mode is deactivated every time the engine is started.

CarManuals2.com

Parking lamps

The front, rear and side vehicle lighting is switched on. You can use this to signal the position of the vehicle when it is parked. For lighting on one side for parking as an additional feature, refer to page 93.

Low beams

When you switch the ignition off with the low-beam headlamps on, only the parking lamps will remain on.

Follow me home lamps

When you activate the headlamp flasher after parking the vehicle and switching off the lights, the low beams will come on for a brief period.

You can also have this function deactivated.◀

LIGHTS ON warning

Whenever you open the driver's door after having turned the ignition key to position 0, you will hear an acoustic signal for a few seconds to remind you that the lamps have not been switched off.

Daytime driving lamps*

If you desire, the light switch can be left in the low-beam position: when the ignition is switched off, the external lighting is also switched off.

Observe the legal regulations regarding the use of daytime driving lamps.

When required, switch on the parking lamps as usual as described under Parking lamps.

You can have the activation settings for the daytime driving lamps programmed on your vehicle.◀

Automatic headlamp control*

When the switch is in this position, the system automatically responds to changes in ambient light – in tunnels, at dusk, etc. – and to rain and snow by switching the low beams on or off.

The vehicle's external lamps remain on constantly when you switch on the front fog lamps after the headlamps have come on automatically.◀

Automatic headlamp control cannot serve as a substitute for your personal judgement in determining when the lamps should be switched on. For example, the sensors are not able to detect fog. In such situations switch on the lamp manually, as otherwise a safety hazard will result.◀

You can have the sensitivity of your vehicle's automatic headlamp control adjusted.◀

CarManuals2.com

Instrument lighting

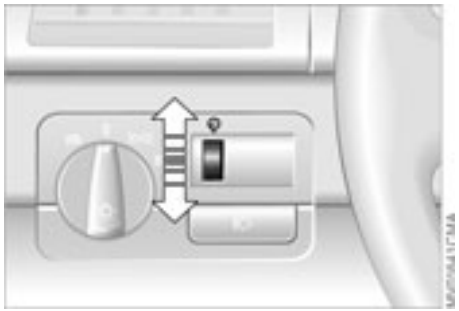

Turn the rotary dial to control the lighting when the parking or low beam lamps are on.

High beams/Standing lamps

1 High beams – blue indicator lamp
2 Headlamp flasher – blue indicator lamp
3 Standing lamps

Standing lamps, left or right

As an additional feature, you can illuminate your vehicle on either side for parking, if you wish to do so:

With the ignition key in position 0, push the lever in the appropriate direction. The lever engages in the turn signal position.

CarManuals2.com

Fog lamps

Front fog lamps

The green indicator lamp in the instrument cluster lights up to indicate that the front fog lamps are on.

If the automatic headlamp control is on, the low beams will come on automatically whenever you activate the front fog lamps.◀

Interior lamps

The interior lamps operate automatically.

To switch the interior lamps on and off manually

Press the button briefly.

If you want the interior lamps to remain off all the time, press and hold the button for approx. three seconds.

Press the button briefly to revert to normal operation.

Reading lamps

Front reading lamps

Switch on and off with the button adjacent to each lamp.

CarManuals2.com

CarManuals2.com

Rear reading lamps

With the hardtop reading lamps are also located in the rear, refer to page 113. Switch on and off with the button adjacent to each lamp.

In order to prevent battery discharge, all of the lamps in the vehicle are automatically switched off approx. 15 minutes after you turn the ignition key to position 0.◀

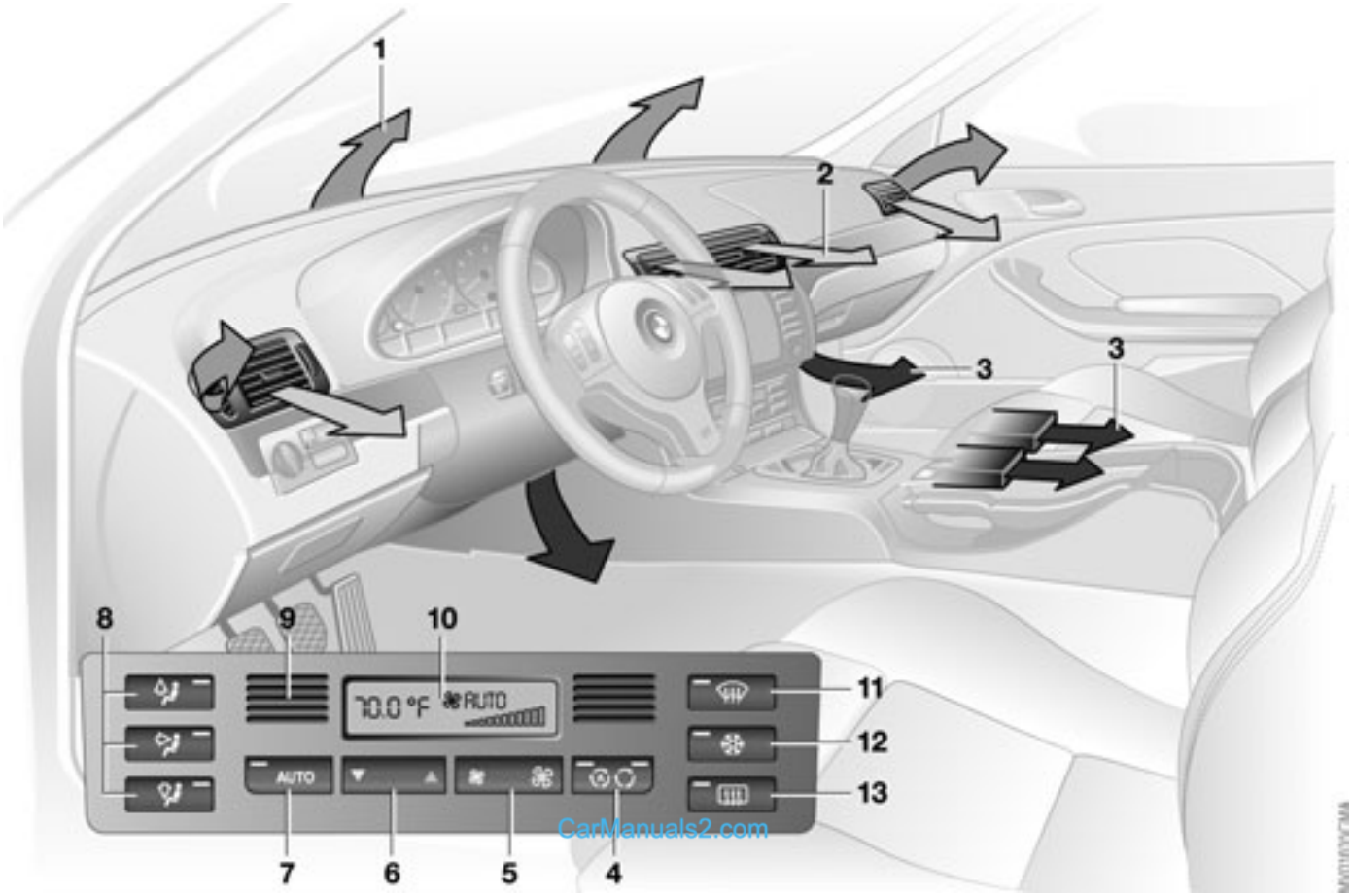
1
2
3
3
8
9
10
70.0 °F
AUTO
11
12
13
AUTO
7
6
5
4
CarManuals2.com

Automatic climate control

1 Air onto the windshield and the side windows
2 Air for the upper body area 99
3 Air to the footwell
4 Outside air/Automatic recirculated-air control (AUC)/Recirculated air 99
5 Air supply/Blower 98
6 Temperature 98
7 Automatic air distribution and supply 98
8 Individual air distribution 98
9 Interior temperature sensor – please keep clear and unobstructed
10 Display for temperature and air supply 98
11 To defrost windows and remove condensation 98
12 Air conditioning 98
13 Rear window defroster 99

CarManuals2.com

Tips for pleasant driving

Use the automatic mode – switch on with AUTO button 7. Select the desired interior temperature.

Detailed setting options are described for you in the following sections.

You can make the settings of your vehicle in such a manner that, when you unlock the vehicle with the remote control of your personal key, your own personalized setting for the automatic climate control is initiated.◀

Automatic air distribution and supply

The AUTO program adjusts the air distribution and the air supply for you and in addition adapts the temperature to external influences – summer, winter – to meet preferences you can specify.

Individual air distribution

You can cancel the AUTO program by selecting specific distribution patterns to suit your own individual requirements. While the AUTO program is then deactivated, the automatic airflow control remains in operation. Air flows onto the windows, toward the upper body, and into the footwell. You can reactivate the automatic air supply by pressing the AUTO button.

Temperature

The interior temperature that appears in the display panel is a general figure intended for reference purposes. We recommend 72 °F /+22 °C as a comfortable setting, even if the air conditioning is on. When you start the vehicle, the system ensures that the selected temperature is reached as quickly as possible. It then maintains this temperature, regardless of the season.

To select the units of measure °C/°F of the display, refer to page 84.

Air supply/Blower

By pressing the left or right half of the button, you can vary the air supply. This deactivates the automatic air supply – the AUTO display disappears from the panel. Nevertheless, the automatic air distribution remains unchanged. You can reactivate the automatic air supply by pressing the AUTO button.

When the lowest blower speed is set and you press the left half of the button, all of the displays are canceled: the blower, heating and air conditioner are switched off, and the air supply is stopped. You can reactivate the system by pressing any button for the automatic climate control.

To defrost windows and remove condensation

This program quickly removes ice and condensation from the windshield and the side windows.

Air conditioning

The air is cooled and dehumidified and – depending on the temperature setting – rewarmed.

Depending on the weather, the windshield may fog over briefly when the engine is started. Air conditioning helps prevent the windows from fogging up.

Condensation forms during operation of the air conditioning system, which then exits under the vehicle. Traces of condensed water of this kind are thus normal.◀

CarManuals2.com

Outside air/Automatic recirculated-air control (AUC)/ Recirculated air

You can respond to unpleasant external odors or pollutants by temporarily stopping the flow of outside air. The system then recirculates the air currently within the vehicle.

By repeatedly pressing the button, you can select one of three different operating modes.

- ▷ Indicator lamps off: outside air always flowing into the vehicle
- ▷ Left-hand indicator lamp on – automatic mode: the system detects pollutants in the outside air and responds by deactivating the outside airflow as required. The system then recirculates the air currently within the vehicle.
  Depending on air quality requirements, the system automatically switches between outside air supply and recirculation of the air already within the vehicle
- ▷ Right-hand indicator lamp on: the flow of outside air is permanently blocked. The system recirculates the air already within the vehicle.

If the windows fog over in the recirculated-air mode, switch the recirculated-air mode off and increase the air supply as required.◀

Rear window defroster

With the convertible top closed or with the hardtop* mounted, press the button. The indicator lamp remains on. The rear window defroster switches off automatically.

You can have your vehicle programmed in such a way that the rear window defroster switches on automatically. This occurs within 5 minutes after starting the engine when outside temperatures are below approx. 39 °F /+4 °C.◀

CarManuals2.com

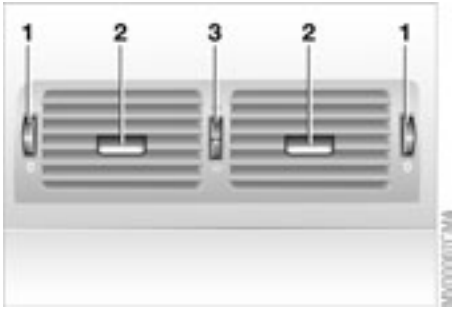

Draft-free ventilation

You can adjust the blower controls for the upper body area to obtain the optimum airflow rates and directions for your personal requirements:

1. Rotary dials for opening and closing the vents at any setting desired
2. Lever for adjusting airflow direction
3. With the rotary dial you can adjust the temperature of the outgoing air:
   - ▷ Turn toward blue – colder
   - ▷ Turn toward red – warmer

Microfilter, activated-charcoal filter

The built-in microfilter removes dust and pollen from the incoming air. The activated-charcoal filter provides additional protection by filtering gaseous pollutants from the outside air. Your BMW center will replace the combined filter as a standard part of your scheduled maintenance. A substantial reduction in airflow indicates that the filter needs to be replaced early.

CarManuals2.com

Glove compartment

If – for example for valet parking – you turn over only your door and ignition key, refer to page 30, then access to the glove compartment and the luggage compartment is not possible.◀

To open

Pull the handle. The glove compartment will light up.

To close

Fold up cover.

To prevent injury in the event of an accident, close the glove compartment immediately after use.◀

To lock

Lock with one of the master keys. A master key can also be used for unlocking.

CarManuals2.com

Front center armrest

To open: press the button and lift upward – see arrow.

Other compartments and nets

You will find additional storage areas in the doors and in the center console above the ashtray. Storage nets are located on the backrests of the front seats.

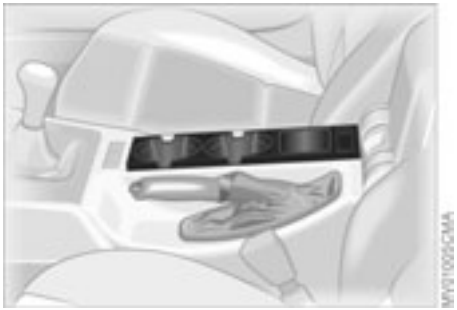

Beverage holder, coin box

A coin box and two beverage holders are provided in the center console.

Cellular phone*

Hands-free system

In vehicles equipped with telephone preparation* or with the communications package*, the cover for the hands-free microphone is located above the interior rearview mirror on the driver side.

For further information on the cellular phone, refer to the separate Owner's Manual.

CarManuals2.com

Ashtray, front*

To empty

Press on the edge of the open cover – see arrow: you can now pull the ashtray upward for removal.

Extinguishing cigarettes

Tap off the ash and gently press the tip into the funnel.

Cigarette lighter

⚠ Hold or touch the hot cigarette lighter by the knob only. Holding or touching it in other areas could result in burns.
The cigarette lighter remains operational when the ignition key has been removed. For this reason, children should never be left in the vehicle unattended.◀

Online Edition for Part-No. 01 41 0 156 854 - © 09/02 BMW AG

Ashtray, front*

Press lighter 1 in. As soon as the lighter jumps back out, it can be removed.

Cigarette lighter socket

It can be used for attaching power supplies for flashlights, car vacuum cleaners and other similar appliances up to a rating of approx. 200 watts at 12 volts. Avoid damaging the socket due to inserting plugs of different shapes or sizes.

Ashtray, rear*

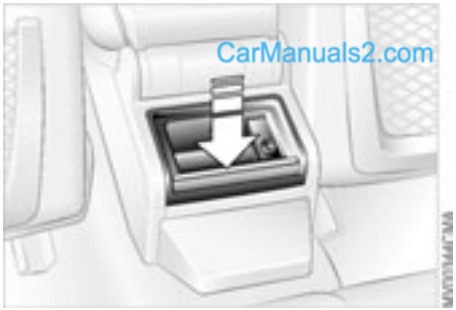

To empty

Press on the edge of the raised cover in the opening direction – see arrow. You can now pull the ashtray upward for removal.

Online Edition for Part-No. 01 41 0 156 854 - © 09/02 BMW AG

Ski bag*

The ski bag allows the safe and clean transport of up to 3 pairs of standard skis or up to two snowboards.

The length of the ski bag and the additional space provided in the luggage compartment make it possible to carry skis up to 6 ft 10 in / 2.10 m long. Because of the tapered shape of the bag, only two pairs of skis longer than 6 ft 10 in / 2.10 m can be carried.

CarManuals2.com

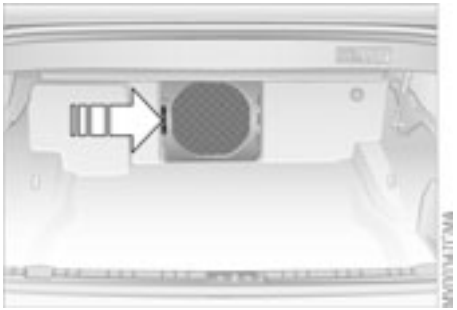

Loading

1. Release the safety belts from their holders
2. Press lever downward – see arrow – and remove the center piece by pulling it forward
3. Extend the ski bag between the front seats. The zipper provides convenient access to stored items. It may be opened to allow the ski bag to dry
4. Press the release button in the luggage compartment – see arrow

Online Edition for Part-No. 01 41 0 156 854 - © 09/02 BMW AG

5. Secure the cover panel with the magnetic retainer on the rear wall and pull out the ski bag.

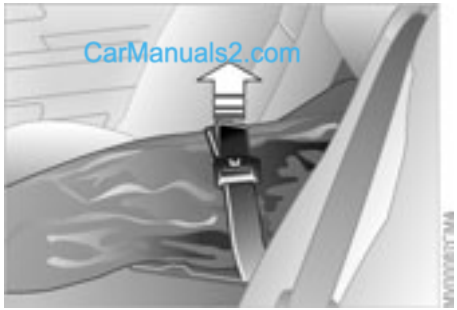

Securing cargo

Secure skis and any other objects stored in the bag by tightening the retaining strap at the buckle.◀

Please be sure that the skis are clean before loading them into the bag. Be careful to avoid damage from sharp edges.◀

Storing the ski bag

To store the ski bag, perform the above steps in reverse sequence.

When reattaching the center piece, guide both bars into the guide and press the center piece back into place. Secure the safety belts in their holders again.◀

Online Edition for Part-No. 01 41 0 156 854 - © 09/02 BMW AG

Always position and secure the load correctly. If you do not, it can endanger the passengers during braking or evasive maneuvers.
Do not exceed the approved gross weight or the approved maximum axle loads, refer to page 152. Otherwise the vehicle's operating safety is no longer assured and you are in violation of the law
Do not stow heavy or hard objects in the passenger compartment without first securing them. Otherwise they would be thrown around during braking and evasive maneuvers and endanger the occupants.◀

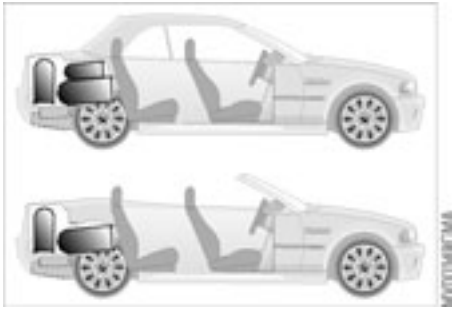

Stowing cargo

▷ Load heavy cargo as far forward as possible – directly behind the backrests or the luggage compartment partition – and as low as possible
▷ Cover sharp edges and corners.

You can enlarge the luggage compartment when the convertible top is closed, refer to page 37. To do this you have to fold the convertible top compartment panel up.
We recommend that you always fold the convertible top compartment panel down as soon as you have removed your cargo from the luggage compartment. This way, you can be sure that you can always operate you convertible top at any time.
Conversely, when the convertible top is closed, raise the convertible top compartment panel before stowing your cargo in the luggage compartment to avoid any damage to the convertible top compartment or your load.◀

CarManuals2.com

Securing the cargo in the luggage compartment

▷ For small, light items, use the rubber-lined non-skid side of the floor mat or secure with a luggage compartment net* or elastic straps, refer to page 37

▷ For large, heavy pieces, see your BMW center for load-securing devices*. Lashing fittings located in the luggage compartment can be used for fastening the load-securing devices.

Comply with the information enclosed with the load-securing devices.

Roof-mounted luggage rack for the hardtop*

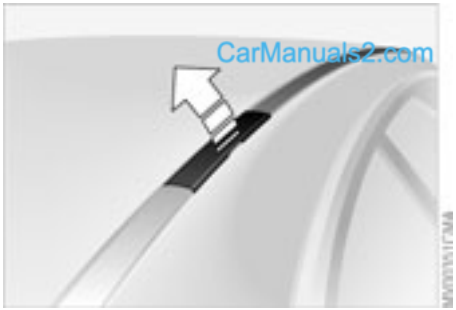

A special roof-rack system is available as an optional extra for your BMW. Please observe the precautions included with the installation instructions.

Anchorages

Access to the mounting points:

To fold up the cover – see arrow – please use the tool which is provided with the luggage system.

Loading and driving notes

Because roof racks raise the center of gravity of the vehicle when loaded, they exercise a major effect on its handling and steering response.

When loading, be sure to remember not to exceed the approved roof weight or the approved gross vehicle weight or the axle loads. You will find the specifications under Technical data on page 152.

Make sure that the load is not too bulky, and attempt to distribute it evenly. Always load the heaviest pieces first so that they are at the bottom. Make sure that no objects get in the way when the luggage compartment lid is opening or closing.

Secure the roof-mounted luggage correctly and safely to prevent it from shifting or being lost during driving.

Drive smoothly and avoid sudden acceleration or braking. Do not corner at high speeds.

CarManuals2.com

Overview

Controls and features

Operation, maintenance

Owner service procedures

Technical data

Index

CarManuals2.com

Break-in procedures

To ensure that your vehicle provides maximum economy throughout a long service life, we request that you observe the following suggestions.

CarManuals2.com

Because of its engineering design, the BMW M3 convertible is an especially high-quality vehicle. It is in your best interest to follow the break-in tips very closely. Doing this, you will create the basis for a long, optimum service life.◀

Engine and differential

▷ Up to 1,250 miles/2,000 km: drive at varying engine and road speeds, but do not exceed the following engine or road speeds:
5,500 rpm or 105 mph/170 km/h.

Obey your local and state maximum speed limits.

Do not depress the accelerator pedal to the full-throttle position.

Vehicles with SMG II, refer to page 71: refrain from using driving program 6 in the sequential mode during the break-in period.

▷ Following the break-in inspection at 1,250 miles/2,000 km, you can gradually increase engine or road speeds.

Follow the same break-in procedure if either the engine or the differential should have to be replaced in the future.

Tires

Due to technical factors associated with their manufacture, tires do not achieve their full traction potential until an initial break-in period has elapsed. Thus drive with extra care during the initial 200 miles/300 km.

Obey your local and state maximum speed limits.

When the vehicle is operated on wet or slushy roads, a wedge of water may form between the tire and the road surface. This phenomenon is referred to as hydroplaning, and can lead to partial or complete loss of traction, vehicle control and braking effectiveness. Reduce your speed on wet roads.◀

Brake system

Approx. 300 miles/500 km must elapse before the brake pads and rotors achieve the optimal pad-surface and wear patterns required for trouble-free operation and long service life later on.

To break in the separate parking brake drums, apply the parking brake lightly when coasting to a standstill – at a traffic signal, for instance – use caution to avoid posing a danger to other road users.

To avoid corrosion, repeat this procedure from time to time.

The brake lamps do not come on when the parking brake is set. Vacuum for the brake system servo unit on your BMW is available only when the engine is running. When you move the vehicle with the engine off – when towing, for example – substantially higher levels of pedal force will be required to brake the vehicle.◀

Clutch

The clutch will also begin to function optimally after about 300 miles/500 km. Drive cautiously during this break-in period and do not press the clutch or shift at high engine speeds.

Brakes: do not rest your foot on the brake pedal while driving. Even light but consistent pedal pressure can lead to high temperatures, brake wear and possibly even brake failure.
Hydroplaning: when driving on wet or slushy roads, reduce road speed. If you do not, a wedge of water can form between tires and road surface. This phenomenon is referred to as hydroplaning, and can lead to partial or complete loss of traction, vehicle control and braking effectiveness.
Driving through water: do not drive through water on the road if it is deeper than 1 ft/30 cm, and then only at walking speed. Otherwise, the vehicle's engine, the electrical systems and the transmission may be damaged.◀

The concept

The Antilock Brake System (ABS) keeps the wheels from locking during braking, thereby enhancing active driving safety.

Braking with ABS

If you are in a situation that requires full braking, you will exploit the full benefits of the ABS system if you apply maximum pedal pressure, panic stop. Since the vehicle maintains steering responsiveness, you can avoid possible obstacles with a minimum of steering effort, despite the full brake application.

Pulsation at the brake pedal combines with sounds from the hydraulic circuits to indicate to the driver that ABS is in its active mode.

Cornering Brake Control (CBC)

CBC is an advanced engineering design of the ABS. When braking while cornering at high speed or braking during high lateral acceleration, or when braking during a lane change, vehicle stability is improved and steering response is enhanced.

CarManuals2.com

Brake fluid level

Low brake fluid level in the reservoir combined with longer than usual pedal travel may indicate a defect in one of the brake system's hydraulic circuits.

Proceed to the nearest BMW center. Higher brake application pressure may be necessary when stopping, and the vehicle may exhibit a slight tendency to pull to one side. Brake distances may even be longer. Please remember to adapt your driving style accordingly.◀

Disc brakes

When the vehicle is driven only occasionally, during extended periods when the vehicle is not used at all, and in operating conditions where brake applications are less frequent, there is an increased tendency for corrosion of the rotors and accumulation of contamination on the brake pads. This occurs because the minimal pressure that must be exerted by the pads to clean the rotors by brake applications is not reached.

Corrosion on brake rotors is signaled by a running or pulsation during braking; even extended subsequent braking will not cure this phenomenon.

It is a good idea to periodically dry the brakes with a gentle application when driving in rain and on wet roads. Watch traffic conditions to ensure that this maneuver does not endanger other road users. The heat generated in this process helps dry the pads and rotors to ensure that your brake system will respond with undiminished efficiency when you need it.

Extended or steep mountain descents should be driven in the gear in which only minimal periodic brake applications are required. This helps avoid placing excessive loads on the brake system. Stay within the allowable rpm range. For additional information, refer to page 80.

CarManuals2.com

Do not coast with the clutch depressed or with the gearshift lever in idle. Do not coast with the engine switched off. If you do so the engine provides no braking effect and there is no power assist for braking or steering when the engine is not running.◀

Brake pads

For your own safety: use only brake pads which BMW has approved for your specific vehicle model. BMW cannot evaluate non-approved brake pads to determine if they are suitable for use, and therefore cannot ensure the operating safety of the vehicle if they are installed.◀

It is not necessary to remove the fabric top even in the winter, when the hardtop is generally in constant use. But you can also remove it at any time with no problem. Before the fabric top is stored in the convertible top compartment, it must be absolutely dry in order to avoid water spot and mildew from forming.

The hardtop offers reading lamps and clothing hooks that can be used just by pressing. In addition, a roof-rack assembly is possible. In this regard, please contact your BMW center.

When suspending articles of clothing from the hooks, be sure that they will not obstruct the driver's vision. Do not hang heavy objects on the hooks. If you do so, they could cause personal injury during braking or evasive maneuvers.◀

Two people are required for installation or removal. Work with extreme caution in order to avoid paint damage and damage to the body or hardtop.

To facilitate hardtop installation or removal, you can obtain a specially designed hardtop lift* or hardtop rack* at your BMW center.

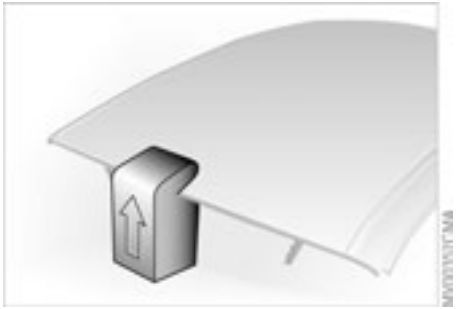

Storage

Storing the hardtop on the floor: slide the styrofoam block that came with the hardtop forward to its center. The arrow on top of the styrofoam block has to be pointing upward when you are doing this.◀

CarManuals2.com

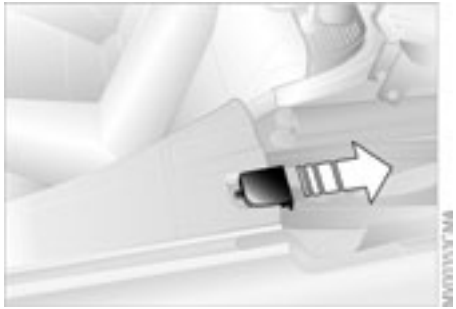

Installation

1. Lower the side windows completely and flip the sun visors down. If necessary, remove the antenna rod to avoid any damage
2. Open the convertible top compartment lid slightly by pressing the button for the convertible top operation, refer to page 42
3. Remove the trim pieces on both sides by pulling them off toward the back – see arrow – and reclose the convertible top compartment lid

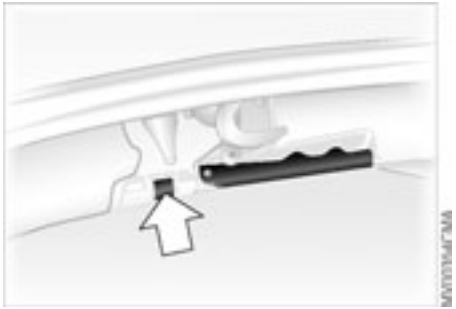

4. Raise the two front locking levers on the hardtop. Press on the buttons to do so – see arrow. The levers will release slightly. Raise the levers as far as the stop will allow
5. Before installing, first flip the cover panels that are located underneath the left and right interior lamps down. To do this, press on the slight bump on the cover panel. There is a holder in the cover panel to securely store the trim pieces that have been removed – see arrow 1
6. Open the red release lever as far as the stop will allow – see arrow 2
7. Position the hardtop onto the supports with the help of a second person. Be sure to put the mountings exactly into the proper brackets

CarManuals2.com

Lift the hardtop carefully. Be extremely careful not to shift the seals. Seals that have been shifted out of place or actually pulled out cause leaks.◀

8. In the back, close the red locking levers by turning to the inside as far as the stop located behind the trim will allow. Flip the cover panels back into place
9. To lock the hardtop in the front, keep pressing on the front locking levers until you hear it engage.

Removal

Follow the same procedure as when installing, just reverse the steps.

Tire inflation pressure

Information for your safety

The factory-approved tires are matched to your vehicle and have been selected to provide optimum safety and driving comfort when used properly.

It is not merely the tire's service life, but also driving comfort and – above all else – driving safety that depend on the condition of the tires and the maintenance of the specified tire pressure.

Incorrect tire inflation pressure is a frequent cause of tire damage. It also significantly influences the road-holding ability of your BMW. Check tire inflation pressures on a regular basis, refer to page 25, at least every two weeks and before beginning a longer trip. Incorrect tire pressure can otherwise lead to driving instability, tire damage and accidents.◀

Tire condition

Tire tread – tire damage

Inspect your tires frequently for tread wear, signs of damage and for foreign objects lodged in the tread. Check the tread depth.

CarManuals2.com

Tread depth should not be allowed to go below 1/8 in / 3 mm, even though the legally specified minimum tread depth is only 1/16 in / 1.6 mm.

Below 1/8 in / 3 mm tread depth, there is a great risk of hydroplaning, even at relatively moderate speeds and with only small amounts of water on the road. Tread wear indicators in the tread-groove base – see arrow – are distributed around the wheel circumference and are labeled on the tire sidewall with TWI – Tread Wear Indicator. At a tread depth of 1/16 in / 1.6 mm, the indicators signal that the legally permissible wear limit has been reached.

Do not drive on a deflated – flat – tire. A flat tire greatly impairs steering and braking response, and can lead to complete loss of control over the vehicle.
Avoid overloading the vehicle so that the permitted load on the tires is not exceeded. Overloading can lead to overheating and internal tire damage. You could have a blowout as a result. Unusual vibrations encountered during normal vehicle operation can indicate tire failure or some other vehicle defect. This type of problem can be caused by contact with curbs, etc. This is also true for irregularities in the vehicle's handling characteristics, such as a pronounced tendency to pull to the left or right. Should this occur, respond by immediately reducing your speed. Pro-

ceed carefully to the nearest BMW center or professional tire center, or have the vehicle towed in to have it, its wheels or its tires inspected.
Tire damage, up to and including blowouts, can endanger the lives of both the vehicle occupants and other road users◀

CarManuals2.com

Tire replacement

DOT quality grades

▷ Treadwear
▷ Traction AA A B C
▷ Temperature A B C

All passenger car tires must conform to Federal Safety Requirements in addition to these grades.◀

Tread wear

The treadwear grade is a comparative rating based on the wear rate of the tire when tested under controlled conditions on a specified government test course.

For example, a tire graded 150 would wear one and one-half – 1 $^1/_2$ – times as well on the government course as a tire graded 100. The relative performance of tires depends upon the actual conditions of their use, however, and may depart significantly from the norm due to variations in driving habits, service practices and differences in road characteristics and climate.

Traction

The traction grades, from highest to lowest, are AA, A, B and C.

Those grades represent the tire's ability to stop on wet pavement as measured under controlled conditions on specified government test surfaces of asphalt and concrete. A tire marked C may have poor traction performance.

The traction grade assigned to this tire is based on straight-ahead braking traction tests, and does not include acceleration, cornering, hydroplaning, or peak traction characteristics.◀

Temperature

The temperature grades are A – the highest – B and C, representing the tire's resistance to the generation of heat and its ability to dissipate heat when tested under controlled conditions on a specified indoor laboratory test wheel.

Sustained high temperature can cause the material of the tire to degenerate and reduce tire life, and excessive temperature can lead to sudden tire failure. The grade C corresponds to a level of performance which all passenger car tires must meet under the Federal Motor Vehicle Safety Standard No. 109.

Online Edition for Part-No. 01 41 0 156 854 - © 09/02 BMW AG

Grades B and A represent higher levels of performance on the laboratory test wheel than the minimum required by law.

CarManuals2.com

The temperature grade for this tire is established for a tire that is properly inflated and not overloaded. Excessive speed, under-inflation, or excessive loading, either separately or in combination, can cause heat buildup and possible tire failure.◀

Uniform Tire Quality Grading

Quality grades can be found where applicable on the tire sidewall between tread shoulder and maximum section width. For example:

Treadwear 200 Traction AA

Temperature A

Tire age

The date on which the tire was manufactured is indicated by the code on the sidewall:

DOT ... 3502 indicates that the tire was manufactured in week 35 of the year 2002.

BMW recommends the replacement of all tires when the tires are no more than 6 years old, even if a tire life of 10 years is possible.

Following wheel/tire changes

Following wheel and/or tire changes you will need to reinitialize both the Flat Tire Monitor and the sequential M gearbox SMG II, refer to pages 75, 89.

Wheel and tire combinations

The right choice

BMW recommends using only wheels and tires that have been approved by BMW for use on your particular model. Although other wheels and tires may theoretically have the same dimensions, variations in factors such as manufacturing tolerances can result in contact between tire and bodywork, ultimately leading to serious accidents. If non-approved wheels and tires are used, BMW cannot evaluate their suitability, and therefore cannot be held liable for driving safety.◀

BMW tests certain tire brands for each tire size, classifies them as road-safe and approves them. Consult your BMW center for more information. Observe any country-specific regulations, e.g. on making a corresponding entry in the vehicle documents.

CarManuals2.com

The correct wheel and tire combination affects different systems such as ABS, DSC, Flat Tire Monitor. The function of these systems is impaired if improper wheel and tire combinations are used.
Therefore, only use tires of the same brand and same tread configuration on the vehicle and, for example following a tire failure, restore the approved wheel and tire combination as soon as possible.◀

The use of rims and lug bolts that do not meet the specifications of the original factory-installed equipment will affect the safe operation of your vehicle and may cause an accident and personal injury.
Never mix tires of different design, such as steel-belted radials with radial bias-belted or bias-ply tires, etc. Mixing tire types will adversely affect roadholding and can lead to loss of vehicle control.◀

Storage

Store wheels and tires in a cool, dry place, protecting them against light whenever possible. Protect the tires against contact with oil, grease and fuel.

Winter tires

Choosing the right tire

BMW recommends winter tires – M+S tires – for operation under inclement winter driving conditions. While all-season tires – M+S designation – provide better winter traction than the corresponding summer tires, they generally do not achieve the performance of winter tires.

In the interest of safe tracking and steering response, install radial tires made by the same manufacturer and with the same tread configuration on all four wheels if you elect to mount winter tires.

When mounting winter wheels, observe the different recesses of the front and rear wheels, as otherwise damage may result.◀

Winter tires

Do not exceed specified maximum speeds

Never exceed the maximum speed for which the winter tires are rated.
Unprofessional attempts by laymen to service tires can lead to damage and accidents.
Have this work performed by skilled professionals only. Your BMW center will be glad to assist you with both their expertise and the proper equipment for your vehicle.◀

Tire condition, tire pressure

At tread depth below approx. 3/16 in / 4 mm, their performance under winter driving conditions deteriorates noticeably. Worn tires should therefore be replaced for safety considerations.

Comply with the specified tire inflation pressures – and be sure to have the wheel and tire assembly balanced every time you change a tire or wheel.

Snow chains*

Only certain snow chains have been tested by BMW and determined and approved as roadworthy. Consult your BMW center for more information.
BMW recommends using only these approved fine-link snow chains. Use them in pairs on winter tires, but only on both rear wheels.

CarManuals2.com

Comply with all manufacturer's safety precautions when mounting the chains. Do not exceed a speed of 30 mph / 50 km/h with snow chains.

After mounting or removing snow chains, always reinitialize the sequential M gearbox SMG II, refer to page 89.

It is not possible to mount snow chains on tires with 18- and 19-inch wheels.
Deactivate the Flat Tire Monitor when using snow chains. Malfunction warnings and undetected losses in pressure are a possibility when driving with snow chains.
For additional information, refer to page 88.◀

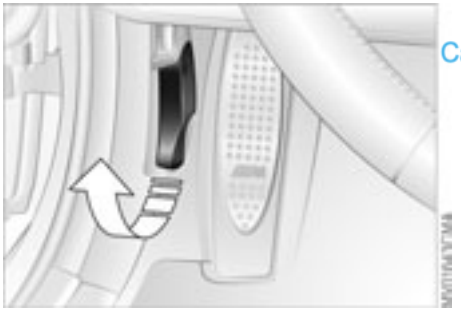

CarManuals2.com

To release

Pull the lever located under the left-hand side of the instrument panel.

Do not attempt to service your vehicle if you do not have the required technical background. Failure to work in an informed, professional manner when servicing components and materials constitutes a safety hazard for vehicle occupants and other road users. If you are not familiar with the guidelines, please have the operations performed by your BMW center.◀

To open

Pull the release handle and open the hood.

It is not possible to drive off using SMG II when the hood is open.◀

To close

Pull the hood downwards and allow the hood to fall from a minimum height of 1 ft/30 cm so that it audibly engages. Check for proper locking by pulling on the hood at the left and right above the headlamps.

To avoid injuries, be sure that the travel path of the hood is clear when it is closed, following the same safety precautions used in all closing procedures.
If you notice while driving that the hood is not completely closed, stop immediately and close it securely.◀

Online Edition for Part-No. 01 41 0 156 854 - © 09/02 BMW AG

CarManuals2.com

Engine compartment essentials

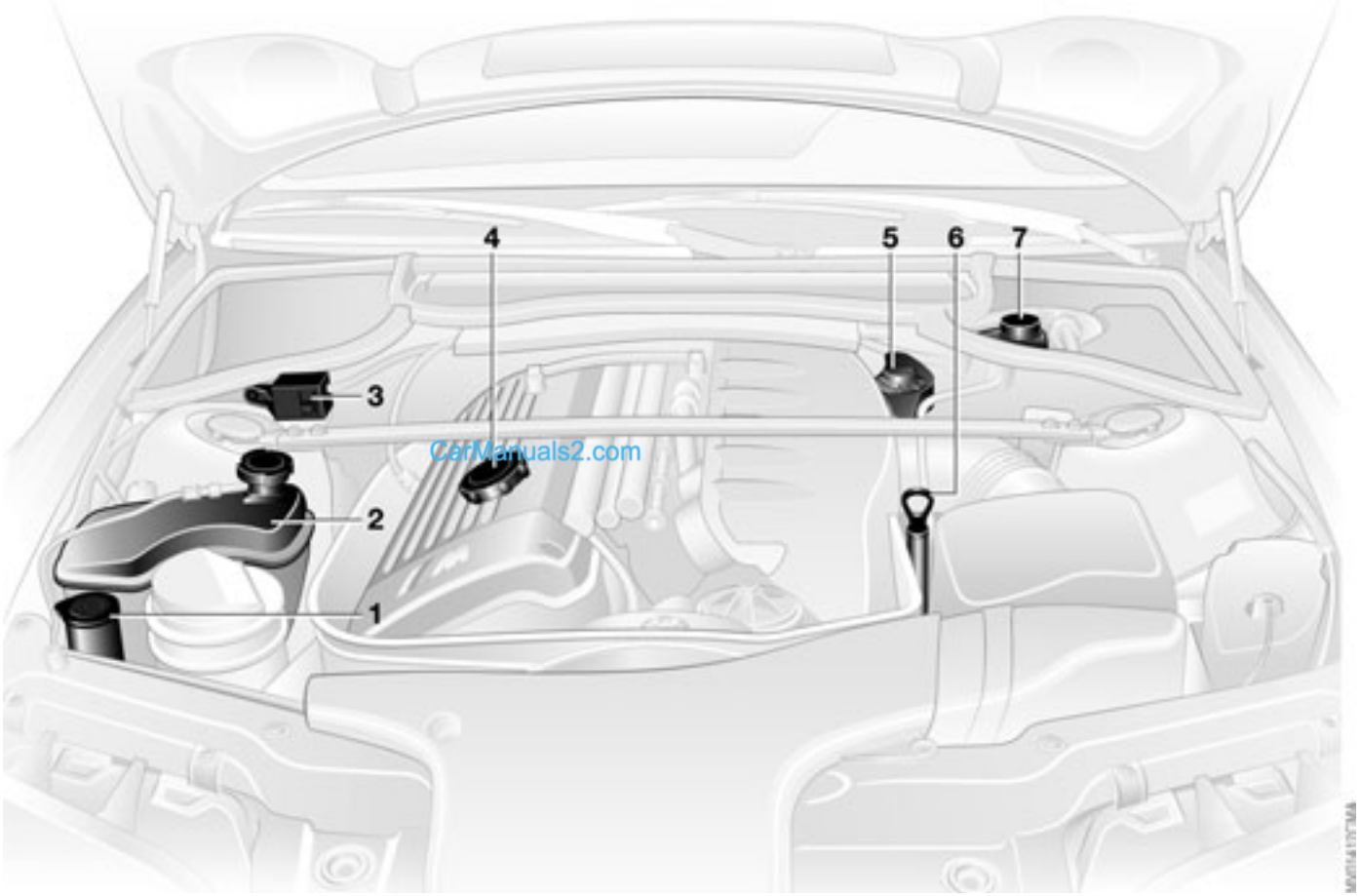

Online Edition for Part-No. 01 41 0 156 854 - © 09/02 BMW AG

Engine compartment essentials

1 Filler neck for windshield and head-lamp washer cleaning system 124

CarManuals2.com

2 Coolant expansion tank 126

3 Positive terminal connection for jump-starting – positive terminal 145

4 Engine oil filler neck 125

5 Expansion tank for SMG hydraulic unit – checking and possible refilling by your BMW center 71

6 Engine oil dipstick 124

7 Filler neck for brake fluid 127

Washer fluids

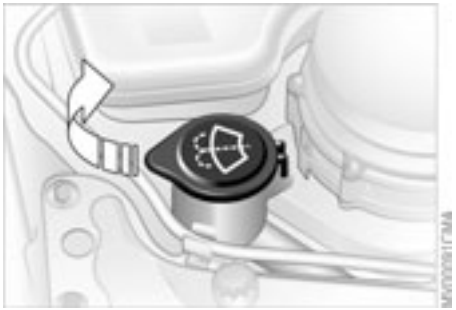

Headlamp* and windshield washer system

Capacity approx.
5.6 US quarts/5.3 liters.

Fill with water and – if required – with a washer antifreeze additive according to manufacturer's recommendations.

We recommend that you mix the washer fluid before adding it to the reservoir.◀

Antifreeze agents for the washer fluid are highly flammable. For this reason, keep them away from sources of flame and store them only in their closed original containers, inaccessible to children. Comply with the instructions on the containers.◀

Engine oil

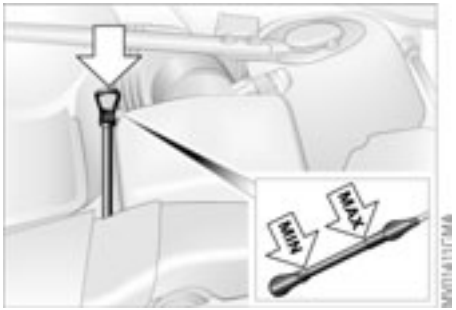

Checking the oil level

1. Park the vehicle on a level surface
2. Switch the engine off after it has reached normal operating temperature
3. After approx. 5 minutes, pull the dipstick out and wipe it off with a clean lint-free cloth, paper towel, or similar material
4. Carefully push the dipstick all the way into the guide tube and pull it out again
5. The oil level should be between the two marks on the dipstick.

As with fuel economy, oil consumption is directly influenced by your driving style and vehicle operating conditions.

The oil volume between the two marks on the dipstick corresponds to approx. 1.4 US quarts/1.3 liter.

CarManuals2.com

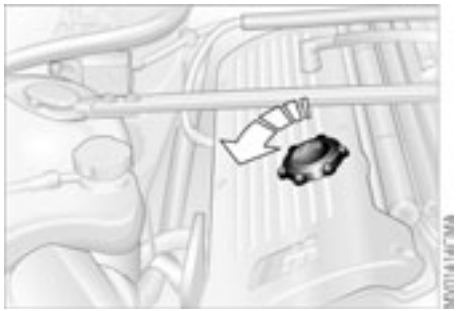

Adding engine oil

While you should wait until the level has dropped to just above the lower mark before adding oil, you should never allow the oil level to fall below this mark.

Do not fill beyond the upper mark on the dipstick. Excess oil will damage the engine.

Before checking the engine oil level after topping up, restart the engine and allow it to run to obtain a correct display. Then proceed as described under Checking the oil level.

BMW engines are designed to operate without oil additives; the use of additives could lead to damage in some cases. This also applies to the manual transmission, the differential, and the power steering system.◀

Recommendation: have the oil changed by your BMW center only.

Continuous exposure to used oil has caused cancer in laboratory testing. For this reason, thoroughly wash any areas of skin that come into contact with oil using soap and water. Always store oils, grease and similar materials so that they are inaccessible to children. Comply with warning labels and information on containers.◀

Comply with the applicable environmental laws regulating the disposal of used oil.◀

Specified engine oils

The quality of the engine oil is extremely important for the function and life of an engine. Based on extensive testing, BMW has approved only certain grades of engine oil.

CarManuals2.com

Use only oils approved for your vehicle model.

Ask your BMW center for details concerning oils that have been approved. You can also call BMW of North America toll-free at 1-800-831-1117 or visit this website: www.bmwusa.com to obtain this information.◀

Alternative oil types

If a High Performance Synthetic Oil approved by BMW should be unavailable, you may use small volumes of other synthetic oils for topping up between oil changes. The following data must appear on the packaging:

▷ Viscosity
preferred: SAE 10W-60
alternative: SAE 5W-40 or SAE 10W40

▷ Specifications
preferred: API SJ/CF
alternative: API SJ – also SK, SL, S etc.

Low ambient temperatures

The oils used by BMW at the factory for your vehicle model can be used at virtually any ambient temperature.

However, if the vehicle is exposed to temperatures below –4 °F /–20 °C for extended periods, please have your BMW center recommend a suitable oil.

Coolant

Do not add coolant to the cooling system when the engine is hot. If you attempt to do so, escaping coolant can cause burns.
Antifreeze and anti-corrosion agents are hazardous to health. You should always store them in their closed original containers and in a location inaccessible to children. Antifreeze and anti-corrosion agents are inflammable. For this reason, do not spill them on hot engine parts. They could ignite and cause burns. Comply with the instructions on the containers.◀

Check the coolant level and add coolant

Check the coolant level when the engine is cold, approx. 68 °F/+20 °C.

1. Open the cap for the expansion tank by turning it slightly counterclockwise to allow accumulated pressure to escape. Then open
2. The coolant level is correct when the upper end of the red float is at least even with the upper edge of the filler neck – refer to the arrow in the illustration – but no more than 3/4 in/ 2 cm above it – that is, up to the second mark on the float. Refer also to the schematic diagram next to the filler neck

CarManuals2.com

Coolant

3. If necessary, add coolant. If the coolant is low, slowly add coolant until the correct level is reached – do not overfill.

Comply with the applicable environmental laws regulating the disposal of antifreeze agents with corrosion inhibitor.◀

Brake fluid

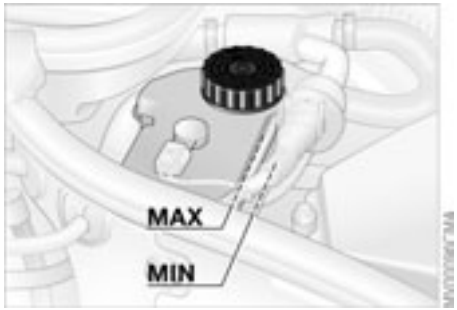

Indicator lamp

BRAKE The brake warning lamp comes on when the parking brake is not engaged: brake fluid level too low, refer to page 18.

Brake warning lamp for Canadian models.

Adding brake fluid

For adding brake fluid or for determining and correcting the cause of brake fluid loss, consult your BMW center. Your BMW center is familiar with the specifications for factory-approved brake fluids – DOT 4.

Due to loss in brake fluid, pedal travel can lengthen and braking efficiency may be reduced. Refer to the information on page 112.

CarManuals2.com

Brake fluid is hygroscopic, that is, it absorbs moisture from the air over time.
In order to ensure the safety and reliability of the brake system, have the brake fluid changed every two years by a BMW center. Refer also to the Service and Warranty Information Booklet for US models or the Warranty and Service Guide Booklet for Canadian models.
Brake fluid is toxic and damages the vehicle's paint. You should always store it in its closed original container and in a location inaccessible to children.
Do not spill the brake fluid and do not fill the brake fluid reservoir beyond the MAX mark. The brake fluid could ignite upon contact with hot engine parts and cause serious burns.◀

Comply with the applicable environmental laws regulating the disposal of brake fluid.◀

Online Edition for Part-No. 01 41 0 156 854 - © 09/02 BMW AG

The BMW Maintenance System has been designed as a reliable means of providing maximum driving and operating safety – and as cost-effectively for you as possible. Please keep in mind that regular maintenance is not only necessary for the safety of your vehicle, but also plays a significant role in maintaining the resale value of the vehicle.

Service interval display

While conventional systems rely on distance traveled alone to determine when service is due, the BMW Maintenance System has for years taken the actual conditions under which the vehicle operates into consideration, because miles can be traveled in many different ways:

For example, 62,000 miles/100,000 km short-distance driving are not equal to the same 62,000 miles/100,000 km of long-distance travel.

The BMW Maintenance System includes the Engine Oil Service and Inspections I and II.

Have a break-in inspection performed at 1,250 miles/2,000 km regardless of the service interval indicated on the display.◀

Determining the maintenance intervals according to the actual loads on the vehicle covers every kind of operating situation. Minimal-use drivers – who drive significantly fewer than 6,200 miles/10,000 km annually – should have the engine oil changed at least every 2 years since oil deteriorates over time, regardless of use.

Service and Warranty Information Booklet for US models/Warranty and Service Guide Booklet for Canadian models

For additional information on required maintenance intervals and procedures, please refer to the Service and Warranty Information Booklet for US models, or the Warranty and Service Guide Booklet for Canadian models.

As a precaution against corrosion, it is advisable to have the body checked for damage from rocks or gravel at the same time, depending upon operating conditions.

Have your BMW center perform maintenance and repair.
Be sure that all maintenance work is recorded in the Service and Warranty Information Booklet for US models, or in the Warranty and Service Guide Booklet for Canadian models. These entries are your verification for the regular maintenance of your vehicle and are required for the performance of warranty repairs.◀

CarManuals2.com

Care

You can find everything you need to know on this topic by consulting the separate Caring for your vehicle brochure.

CarManuals2.com

California Proposition 65 warning

California laws require us to state the following warning:

CarManuals2.com

Engine exhaust, some of its constituents, and certain vehicle components contain or emit chemicals known to the State of California to cause cancer and birth defects and reproductive harm. In addition, certain fluids contained in vehicles and certain products of component wear contain or emit chemicals known to the State of California to cause cancer and birth defects or other reproductive harm. Battery posts, terminals and related accessories contain lead and lead compounds. Wash your hands after handling.
Used engine oil contains chemicals that have caused cancer in laboratory animals. Always protect your skin by washing thoroughly with soap and water.◀

OBD interface socket

The Onboard Diagnostic (OBD) interface socket is located on the left of the driver's side at the bottom of the instrument panel and under a cover. The cover has the letters OBD on it.

The purpose of the OBD system is to assure proper emission-control system operation for the vehicle's lifetime by monitoring emission-related components and systems for deterioration and malfunction.

An illuminated indicator informs you of the need for service, not that you need to stop the vehicle. However, the systems should be checked by your BMW center at the earliest possible opportunity.

Online Edition for Part-No. 01 41 0 156 854 - © 09/02 BMW AG

OBD interface socket

If the indicator blinks or flashes, this indicates a high level of engine misfire. Reduce speed and contact your nearest BMW center immediately. Severe engine misfiring for even a short period of time can seriously damage emission-control system components, especially the catalytic converter.

CarManuals2.com

Service Engine Soon warning lamp for Canadian models.

If the fuel filler cap is not on tight enough, the OBD system can detect leaking vapor and the indicator will light up. If the fuel filler cap is then tightened, the indicator will usually go out after a short period of time.◀

CarManuals2.com

CarManuals2.com

Overview

Controls and features

Operation, maintenance

Owner service procedures

Technical data

Index

Onboard tool kit

The onboard tool kit is located in the luggage compartment lid.

To open, loosen the wing nut. For storage place of towing eyelet, refer to page 146.

Windshield wiper blades

1. Switch off the engine
2. Fold the wiper arm completely out from the windshield
3. Position the wiper blade at an angle and pull the release spring – see arrow
4. Fold the wiper blade down and unhook it toward the windshield
5. Pull the wiper blade past the wiper arm toward the top
6. Insert a new wiper blade and apply pressure until you hear it engage.

CarManuals2.com

The lamps and bulbs make essential contributions to the safety of your vehicle. Therefore, comply fully with the following instructions during bulb replacement. If you are not familiar with any of the procedures, consult your BMW center.

Do not touch the glass portion of a new bulb with your bare hands since even small amounts of impurities burn in to the surface and reduce the service life of the bulb. Use a clean cloth, paper napkin, or a similar material, or hold the bulb by its metallic base.◀

A replacement bulb set is available from your BMW center.

Before working on the electrical system, switch off the electrical accessory you are working on or disconnect the cable from the negative terminal of the battery. Failure to observe this precaution could result in short circuits.
To prevent injuries and damage when changing a bulb, be sure to comply with any instructions provided by the bulb manufacturer.◀

Low beams and high beams

▷ Low beams: H7 bulb, 55 watts
▷ High beams: H7 bulb, 55 watts

The H7 bulb is pressurized. Therefore, wear safety glasses and protective gloves. Failure to comply with this precaution could lead to injury if the bulb is damaged.◀

Please contact a BMW center in case of a malfunction.

Parking lamps

5 watt bulb

Please contact a BMW center in case of a malfunction.

Carmanuals2.com

When cleaning the headlamps, please follow the instructions in the Caring for your vehicle brochure.

Xenon lamps*

The service life of these bulbs is very long and the probability of a failure is very low, provided that they are not switched on and off an unusual number of times. If one of these bulbs should nevertheless fail, it is possible to continue driving with great caution using the fog lamps, provided traffic laws in your area do not prohibit this.

Because of the extremely high voltages involved, any work on the xenon lighting system, including bulb-changing, should be carried out by technically-qualified personnel only. Otherwise, there is a risk of fatal injury.◀

Front turn signal indicators

21 watt bulb

1. Extend a screwdriver through the upper opening loosen the screw and remove it
2. Remove lamp by pulling it out toward the front
3. Applying light pressure, turn the bulb to the left. Remove and exchange the bulb
4. Insert the 2 pins on the lamp into the guides on the vehicle
5. Slide in the lamp and screw the bulb in place through the upper opening.

Side turn signal indicators

5 watt bulb

1. Use finger pressure against the rear end of the lamp – see arrow – to press it forward for removal
2. Apply gentle pressure to the bulb while turning it to the left to remove.

CarManuals2.com

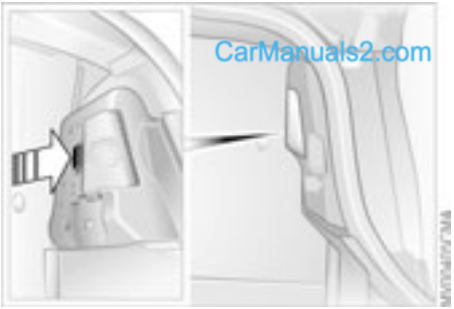

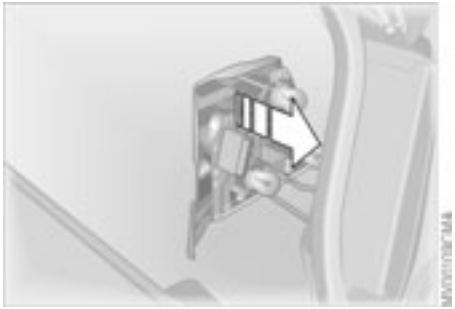

Tail lamps

1 Turn signal indicator

2 Backup lamp

3 Tail lamp

4 Tail lamp/brake lamp

Tail lamp 4: 21/4 watt bulb

Remaining bulbs: 21 watt

The illustration shows the right-hand luggage compartment opening.

Bulbs in the fender:

All of the bulbs are integrated in a central bulb holder.

1. Release the bulb holder – see arrow
2. Take out the bulb holder
3. Unplug the power supply receptacle. Set the bulb holder aside, on the luggage compartment floor, for example
4. Applying light pressure, turn the bulb to the left. Remove and exchange the bulb
5. Plug in the power supply receptacle
6. Reattach the bulb holder until you hear it snap into place – see arrow.

Online Edition for Part-No. 01 41 0 156 854 - © 09/02 BMW AG

CarManuals2.com

Bulbs in the luggage compartment lid

1. Using a screwdriver, loosen the clip
2. Fold the trim panel down – see arrow 1. Disengage the bulb holder – see arrow 2 – and remove it
3. Applying light pressure, turn the bulb to the left. Remove and exchange the bulb
4. Press the bulb holder into position until you hear it engage
5. Reinstall the trim with the clip.

Center high-mount brake lamp

LED strip in luggage compartment lid.

Please contact a BMW center in case of a malfunction.

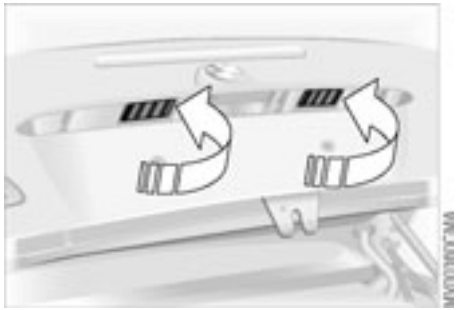

License plate lamps

5 watt bulb

1. Place a screwdriver in the slot and press toward the left – see arrow – to release the lens
2. Replace the bulb.

Precautions in case of a flat tire: Stop the vehicle as far as possible from passing traffic; switch on the hazard warning flashers.
Turn the steering wheel to the straight-ahead position and engage the steering lock. Shift into 1st or reverse and engage the parking brake.
All passengers should be outside the vehicle and well away from your immediate working area – behind a guardrail, for instance.
If necessary, set up your warning triangle or portable hazard warning lamp on the roadside at an appropriate distance from the rear of the vehicle. Comply with all safety guidelines and regulations.◀

M Mobility system

You will find an M Mobility system in your BMW M3 convertible for repairing flat tires. With this system you can apply a sealing liquid to the inside of the tire that seals off the damaged point and then continue driving.

The M Mobility system makes transporting a spare wheel superfluous, thereby reducing the amount of weight you have to carry around.

CarManuals2.com

Using the M Mobility system

To repair a flat tire using the M Mobility system, proceed as follows:

▷ Preparing the M Mobility system for use, refer to the next column
▷ This is part of the M Mobility system, refer to page 140
▷ Filling with sealant, refer to page 141
▷ Distributing sealant, refer to page 141
▷ Inflating tire to correct pressure, refer to page 142.

Please keep in mind that the fluids bottle in the system's sealant container has to be changed every 3 years by your BMW center, if the unit has not been used.◀

Preparing the M Mobility system for use

The M Mobility system is located in the luggage compartment under the floor panel:

1. Lift the floor panel
2. Loosen the M Mobility system from its storage location.

Before you use the M Mobility system, read the warnings and danger notices on the device carefully.◀

If possible, leave the foreign object in the tire.

Pull off the sticker 5, refer to the second column on the right, for the speed limit and apply it to the steering wheel.

CarManuals2.com

This is part of the M Mobility system

1 On/Off switch

2 Connection hose with manometer for connecting the compressor with the sealant container or to connect the compressor to the wheel

3 Manometer for indicating the tire pressure

4 Connector hose from the sealant container to the wheel

5 Sticker with speed limit

6 Plug and cable for the cigarette lighter socket

7 Protective gloves, not shown

CarManuals2.com

Filling with sealant

1. Take off the round cover and take out hose 4. Unscrew the valve dust cap from the defective wheel and screw the hose to the valve. Keep the dust cap in a safe place
2. Flip open the cover and pull out the enclosed protective gloves. Take out hose 2 with the manometer and screw it to the terminal for the sealant container as shown in the illustration
3. Make sure that the system has been switched off, position 0.
   Take out plug 6 and insert it into the cigarette lighter socket in the passenger compartment, refer to page 103
4. Make sure that the screw on the rear of the pressure gauge 3 is tightened down. Turn on the M Mobility system, position I, refer to illustration, and allow minutes to elapse, to let the sealant flow in. It does not matter afterward, what the tire's inflation pressure is
5. Turn the system off.
   Disconnect the connector hose from the sealant container and the wheel valve. Stow the M Mobility system in the luggage compartment.

Distributing the sealant

Right afterward, drive at least 1 1/4 miles/2 km, so that the liquid sealant distributes evenly throughout the inside of the tire.

Do not exceed a maximum speed of 40 mph / 60 km/h. If possible, keep the vehicle speed above 10 mph / 20 km/h.
Stop in a suitable spot.◀

Inflating tire to correct pressure

1. Take out the hose with the pressure gauge and screw it onto the valve. Take the plug out and plug it into the cigarette lighter socket in the passenger compartment
2. Reset the air pressure to 29 psi/200 kilopascal, and:
   - ▷ Increase tire pressure: switch on the M Mobility System, position I. Switch off the unit briefly to check the current tire pressure
   - ▷ Decrease tire pressure: turn the screw on the back of the manometer, a valve located there will open

Even if the tire fails to hold the pressure, you should still carry out Step 3 before proceeding to drive the vehicle again, refer to Distributing the sealant for more information. Then repeat Steps 1 through 3.
The use of the M Mobility system may be ineffective if the damaged area in the tire is larger than approx. 3/16 in / 4 mm. Please consult the nearest BMW center if the tire cannot be temporarily repaired with the M Mobility system.◀

3. Unscrew the hose from the valve and stow the M Mobility system in the luggage compartment. Screw the dust cap onto the valve again.

Do not exceed the maximum speed limit described below, otherwise it could lead to accidents.◀

When you start driving again, do not exceed the permissible maximum speed of 45 mph / 80 km/h.

CarManuals2.com

Repairing a flat tire

You will find corresponding instructions for using the M Mobility system on the device. Replace the defective tire as soon as possible and have the new wheel balanced. Reinitialize the Flat Tire Monitor, and refer to page 89 for further information. Have the M Mobility system refilled. Contact your BMW center for this.◀

Protect valve stems against dirt using screw-on dust caps. Dirty valve stems frequently lead to slow pressure loss.

Battery

Battery posts, terminals, and related accessories contain lead and lead compounds. Wash hands after handling.◀

Maintenance

The battery is completely maintenance-free. That means that the original battery acid will normally last for the service life of the battery under moderate climate conditions.

Please consult your BMW center whenever you have any questions concerning the battery. Since the battery is absolutely maintenance-free, the following statements are for your information only.◀

CarManuals2.com

Never disconnect the battery when the engine is running; the ensuing voltage surge would seriously damage the vehicle's onboard electronic systems.◀

Charging the battery

Charge the battery in the vehicle only when the engine is not running. Use the connections provided in the engine compartment. For information on the connections, see Jump-starting, page 145.

Return used batteries to a recycling point or your BMW center. Maintain the battery in an upright position for transport and storage. Secure the battery against tilting in transit.◀

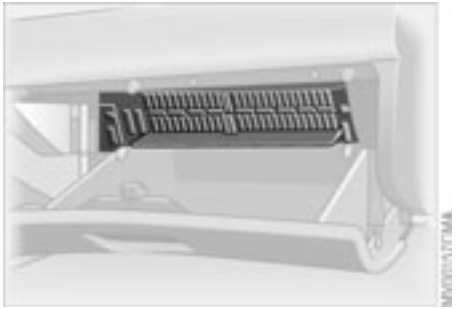

CarManuals2.com

You will find the fuses and information on their respective allocation in the glove compartment behind a panel with two snap clips.

Do not attempt to repair a blown fuse or replace it with a fuse having a different color or amperage rating. To do this could cause a fire in the vehicle resulting from a circuit overload.◀

Jump-starting

When your battery is discharged, you can use two jumper cables to start your vehicle with power from the battery in a second vehicle. You can also use the same method to help start another vehicle. Use only jumper cables with fully insulated handles on the terminal clamps.

Do not touch high-voltage wiring and cables on a running engine. Contact with components carrying high voltage can be harmful or fatal. Carefully observe the following instructions to avoid personal injury and/or damage to one or both vehicles.◀

1. The battery in the support vehicle must be rated at 12 volts. This information is provided on the battery label
2. Stop the engine of the support vehicle and switch off all electrical components in both vehicles – except for the hazard warning flashers of the support vehicle
3. Make absolutely certain that there is no contact between the bodywork of the two vehicles – short circuit hazard

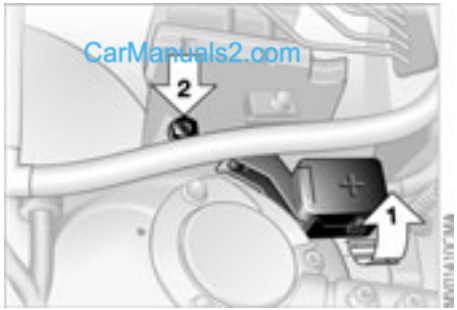

4. The auxiliary jump-starting terminal located in your BMW's engine compartment acts as the positive battery terminal. The cover of this auxiliary terminal is marked with a + sign. Remove by pulling the tab, see arrow 1. Start by connecting the jumper cable from the positive terminal of the discharged battery to the positive terminal of the support battery
5. Then connect the negative terminals with the other jumper cable. Attach the cable to either the support vehicle's negative battery terminal or to a suitable ground on its engine or bodywork. Then connect the other end to the negative battery terminal or a suitable ground on the vehicle being started. Your BMW is equipped with a special nut for this purpose – see arrow 2

Always adhere to this sequence when connecting jumper cables; failure to observe this procedure can lead to sparks at the battery terminals and pose an injury hazard.◀

6. Start the engine of the support vehicle and let it run for several minutes at a slightly elevated engine idle speed
7. Start the engine of the other vehicle as usual. If the first start attempt is not successful, wait a few minutes before another attempt in order to allow the discharged battery to recharge
8. Allow the engines to run for several minutes before disconnecting the jumper cables
9. Then disconnect the jumper cables in the opposite order.

Have the battery recharged at your BMW center as required.

Do not use spray starter fluids to start the engine.◀

Online Edition for Part-No. 01 41 0 156 854 - © 09/02 BMW AG

Towing eyelet

The towing eyelet, which can be unscrewed, is in the luggage compartment under the floor mat and must remain in the vehicle. This eyelet is designed for installation in the tow sockets located at the front and rear of the vehicle. It is intended for towing on paved road surfaces only.

The towing eyelet should not be used to pull a vehicle out of deep snow, mud, sand, etc.

Comply with all applicable towing laws and regulations at all times.

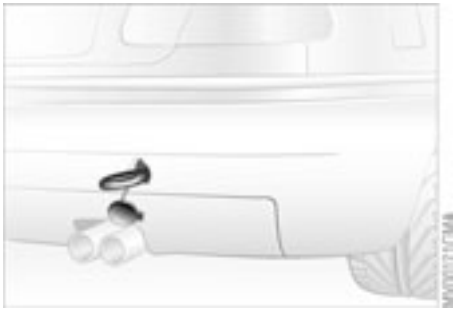

Access to tow sockets

Front:

Press out the cover panel with a screwdriver at the top of the recess.

Rear:

Press out the cover panel with a screwdriver at the top of the recess.

Make sure the towing eyelet is firmly screwed all the way in, otherwise the thread could be damaged. Only use the towing eyelet provided in the vehicle to avoid damage.
Do not tow the vehicle by any components of the running gear, or lash them down in any way. If you do, the components could be damaged, possibly leading to accidents.◀

Keep the vehicles in line and avoid towing at an offset angle. Ensure that the tow rope connecting the two vehicles is tight, with no slack, before starting off.◀

CarManuals2.com

Use only a nylon towing strap to tow the vehicle, since the inherent resilience of this material helps protect both vehicles from sudden jerking movements.

The towed vehicle should always be the lighter of the two vehicles. If this is not the case, it will not be possible to control vehicle handling.◀

Tow-starting

For instructions on jump-starting, refer to page 145.

Never attempt to use your vehicle to push another vehicle, since damage to the energy-absorbing bumpers could result.

Towing a vehicle

1. Gearshift lever in Neutral
2. Towing speed:
   Max. 45 mph / 70 km/h
3. Towing distance:
   Max. 95 miles/150 km
4. Leave the ignition key at position 1 to ensure that the brake lamps, turn signal indicators, horn and windshield wipers remain operative, and to prevent the steering lock detent from engaging
5. Switch on the hazard-warning system – observe applicable legal regulations.

Find some means of identifying the vehicle in tow, for instance, place a sign or warning triangle in the rear window.

Make sure that the ignition key remains in position 1 even when the electrical system has failed to prevent the steering lock from engaging. The steering and brakes are without power-assist when the engine is off. This means that increased effort is required for steering and braking.◀

Vehicle with sequential M gearbox SMG II:

To push or tow, engage selector lever in position 0.

Never work on the vehicle with a driving position engaged.◀

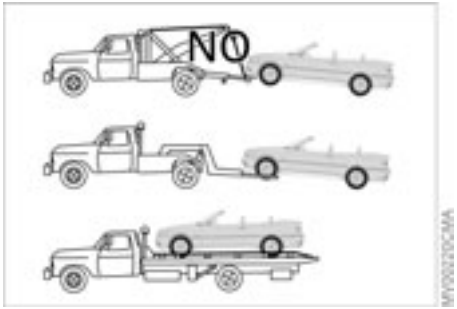

Towing with a commercial tow truck

▷ Do not tow with sling-type equipment
▷ Use wheel lift or flatbed equipment
▷ Please comply with applicable state towing laws.

Never allow passengers to ride in a towed vehicle for any reason. Never attach tie-down hooks, chains, straps, or tow hooks to tie rods, control arms, or any other part of the vehicle suspension, as severe damage to these components will occur, possibly leading to accidents.◀

CarManuals2.com

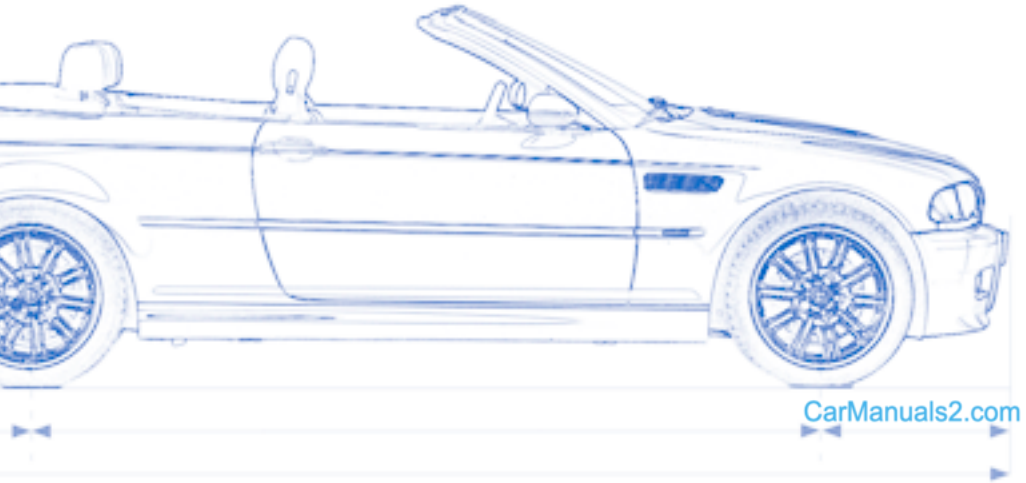

Online Edition for Part-No. 01 41 0 156 854 - © 09/02 BMW AG

Overview

Controls and features

Operation, maintenance

Owner service procedures

Technical data

Index

CarManuals2.com

Engine data

Displacement Number of cylinders	cu in/cm³	198.1/3,246 6
Max. power output at engine speed	hp/kW rpm	333/248 7,900
Maximum torque at engine speed	lb ft/Nm rpm	262/355 4,900
Compression ratio	ε	11.5
Stroke Bore	in/mm in/mm	3.58/91 3.43/87
Fuel-injection system		Digital electronic engine-management system

CarManuals2.com

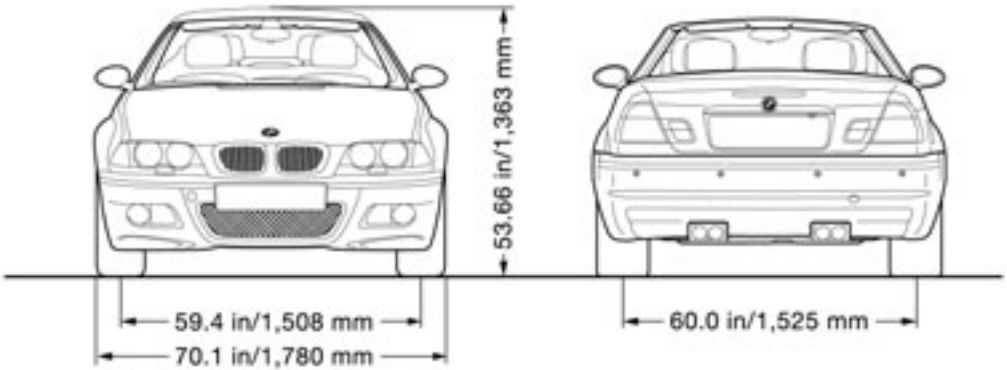

CarManuals2.com

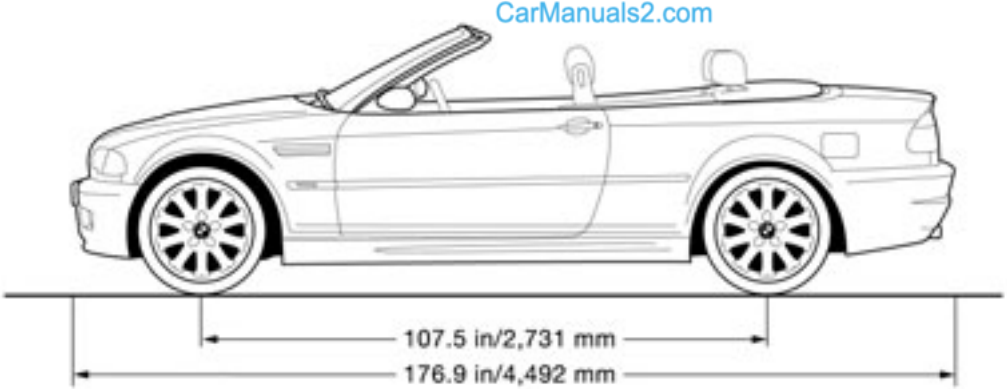

Minimum turning circle dia.: 36.1 feet/11.0 m.

Online Edition for Part-No. 01 41 0 156 854 - © 09/02 BMW AG

Weights

Curb weight	lbs/kg	3,782/1,715
Approved gross vehicle weight	lbs/kg	4,630/2,100
Approved front axle load	lbs/kg	2,183/990
Approved rear axle load	lbs/kg	2,579/1,170
Permissible roof load for the hardtop	lbs/kg	165/75
Luggage compartment capacity with the convertible top compartment raised	cu ft/l	9.2/260 10.6/300

Approved axle loads and approved gross vehicle weight may not be exceeded.

CarManuals2.com

			Notes
Fuel tank Reserve	gal./liters gal./liters	approx. 16.6/63 approx. 2.1/8	Fuel specification: page 25
Windshield washer system/ Headlamp cleaning system	quarts/liters	approx. 5.6/5.3	For details: page 124
Cooling system including heater circuit	quarts/liters	approx. 9.8/9.3	For details: page 126
Engine with oil filter change	quarts/liters	approx. 5.8/5.5	For details: page 125
Manual transmission	quarts/liters	approx. 1.9/1.8	Oil change during running-in check and during each inspection II
Differential	quarts/liters	approx. 1.2/1.1	Oil change during running-in check and during each inspection II

CarManuals2.com

CarManuals2.com

CarManuals2.com

Overview

Controls and features

Operation, maintenance

Owner service procedures

Technical data

Index

Everything from A to Z

A
ABS Antilock Brake System
indicator lamp 19
Accessories 5
Activated-charcoal filter 100
Adding brake fluid 122, 127
Air conditioning 98
Air distribution, automatic 98
Air distribution, individual 98
Air nozzles 96
Air outlets 96
Air pressure 115
checking 25
Air supply 98
Air supply vents
recirculated-air mode 99
Airbags 57
warning lamp 18
Alarm system 38
avoiding false alarm 39
indicator lamp 39
interior motion sensor 38
tilt alarm sensor 38
Antifreeze 126
Antilock Brake System
(ABS) 111
indicator lamp 19
Anti-theft system 30, 38
Armrest 101
Ashtray
front 102
rear 103
AUC Automatic recirculated-air control 99
Automatic car wash, refer to the Caring for your vehicle brochure
Automatic climate control 96
Automatic cruise control 78
Automatic dimming, interior rearview mirror 56
Automatic headlamp control 92
Automatic recirculated-air control (AUC) 99
Auxiliary terminal for jump-starting 122, 145
Average fuel consumption 85
Average speed 85
Avoiding unintentional alarms 39
Axle loads 152

B
Backrests
unlocking 51
Backup lamps 70
replacing bulb 137
Battery 143
charge 143
charge current 18
charge current lamp 18
Belts 52
Beverage holder 102
Blower 98
BMW Maintenance System 128
Bore 150
Bottle holder, see Beverage holder 102
Brake fluid level 112
warning lamp 18, 127
Brake hydraulic system
warning lamp 18
Brake lamps
replacing bulb 137
Brake pads 112
Brake system
brake fluid level, warning lamp 18
brake pads, indicator lamp 19
Brakes
malfunctions 112
parking brake 69
Braking
driving notes 111
Break-in procedures 110
Bulb replacement 135

C
California Proposition 65 warning 130
Can holder, see Beverage holder 102
Capacities 153
Car care, refer to the Caring for your vehicle brochure
Car vacuum cleaner, connecting 103
Car wash, refer to the Caring for your vehicle brochure
Care, refer to the Caring for your vehicle brochure
Cargo loading 106
Caring for headlamp covers, refer to the Caring for your vehicle brochure 135
CBC Cornering Brake Control 111
indicator lamp 19
Cellular phone 102
Center armrest 101
Center high-mount brake lamp 138
Central locking system 30
button 34
Check Control 82
CHECK FILLER CAP
indicator lamp 19
Checking coolant level 126
Checking oil level 124
Child seat 59
Child-restraint systems 59
Cigarette lighter 102
Clean windshield 78

CarManuals2.com

Cleaning position, convertible top 45
Cleaning windshield 78
Clock 83
refer also to the radio or onboard computer Owner's Manual
Cockpit 14
Code, tires 118
Coin box 102
Compression ratio 150
Computer 84
Condensation, removing from windows 98
Configure personal settings Vehicle Memory, Key Memory 65
Consumption
display 81
fuel 85
Convertible top
cleaning position 45
electrical malfunction 44
emergency operation 44
opening and closing 42
Convertible top operation
fully automatic convertible top 41
Coolant 122, 126, 153
indicator lamp 19
Cooling system 153
Copyright 4
Cornering Brake Control (CBC) 111
Cruise control 78
indicator lamp 20
Cup holder, see Beverage holder 102
Curb weight 152
Cushion height 151

D

Data
dimensions 151
engine 150
weights 152
Daytime driving lamps 92
DBC Dynamic Brake Control 88
warning lamp 19
Defrost position 98
Defrosting rear window 99
Defrosting windows 98
Digital clock 83
Dimensions 151
Dipstick, engine oil 124
Disc brakes 112
Displacement 150
Display lighting 93
Displays 16
Distance warning 86
Door key 30
Door lock buttons 34
Doors
emergency operation 33
manual operation 33
remote control 31
unlocking and locking 31, 33
Drivelogic 74
Driving notes
braking 111
disc brakes 112
general 111
hydroplaning 111
DSC Dynamic Stability Control 87
indicator lamp 19
Dynamic Brake Control (DBC) 88
Dynamic Stability Control (DSC) 87
indicator lamp 19

E

Electric malfunction
doors 33
Electric power windows 40
Electrical accessories, failure 144
Electrical malfunction
convertible top 44
fuel filler door 24
Emergency operation
doors 33
fuel filler door 24
Emergency release
luggage compartment lid 36
Engine
displacement 150
output 150
starting 67
switching off 69
torque 150
Engine compartment 122
Engine coolant 153
refilling 126
temperature gauge 81
Engine data 150
Engine electronics
warning lamp 19
Engine oil
adding 122, 124
capacity 153
consumption 124
dipstick 124
quality 125
types 125
viscosity 125
Engine oil level
check 122
indicator lamp 19
warning lamp 18

CarManuals2.com

Engine oil pressure
warning lamp 18
Engine speed 150
Entering the rear 51
Exterior mirrors 55
Eyelet, towing 146

F
False alarm, avoiding 39
Fault displays 82
First-aid kit 23
Flat tire 115
repairing 139
Flat Tire Monitor 88
indicator lamp 18, 19
Fog lamps 94
Fold down convertible top
compartment panel 37
Follow me home lamps 92
Footbrake 112
Footbrake, refer to Driving
notes 111
Footwell lamps 94
Front airbags 57
Front fog lamps 94
indicator lamp 20
Front seat adjustment 49
Frost protection,
radiator 126
Fuel 25
Fuel consumption 85
display 81
Fuel filler door 24
release following an elec-
trical malfunction 24
Fuel gauge 81
Fuel specifications 25
Fuel tank capacity 153
Fuel tank display 81
Fuel tank gauge 81
Fuel-injection system 150
Fully automatic convertible
top 41
operation 41
Fuses 144
replacing 144

G
Gasoline 25
Gasoline gauge 81
Gearbox, sequential 71
Gearshift lever 70
Glove compartment 101
Grills 96
Gross vehicle weight 152

H
Hands-free system 102
Hardtop 113
Hazard warning flashers 14
Hazard warning triangle 23
Head restraints 50
Headlamp 92
Headlamp cleaning system
122, 124, 153
Headlamp control 92
Headlamp flasher 76, 93
Heated mirror 55
Heated seats 54
Heavy loads 106
High beams 76, 93
indicator lamps 21
Holder for beverages 102
Hood release 120
Horn 14
Hydroplaning 111, 115

I
Ice warning 84
Ignition key 30
positions 66
Ignition lock 66
Imprint 4
Indicator lamps 18
Individual settings, Vehicle
Memory, Key Memory 65
Inflation pressure 25, 115
INSPECTION 82
Instrument cluster 16
Instrument lighting 93
Instrument panel 14, 16
Interface socket for onboard
diagnostics (OBD) 130
Interior lamps 32, 94
remote control 32
Interior motion sensor 38
remote control 32
switching off 32, 39
Interior rearview mirror
automatic dimming
feature 56
Interior temperature
adjusting 98
Intermittent mode 77

J
Jump-starting 145

K
Key Memory 65
Keys 30

L
Lamp replacement 135
Lamps
daytime driving lamps 92
fog lamps 94
footwell lamps 94
headlamp flasher 76, 93
high beams 93
instrument lighting 93
interior lamps 94
low beams 92
parking lamps 92
reading lamps 94
standing lamps 93
Lashing fittings 107

CarManuals2.com

LATCH child-restraint mounting system 62
Leather care, refer to the Caring for your vehicle brochure
Length 151
License plate lamp
replacing bulb 139
Light switch 92
Lighter 102
Lighting, see lamps
LIGHTS ON warning 92
Load-securing devices 106
Lock, steering wheel 66
Low beams 92
bulb replacement 135
Luggage compartment 35, 37
capacity 152
floor panel 37
increase volume 37
Luggage compartment lid 35
emergency release 36
manual operation 35
opening from the inside 35
remote control 32
securing separately 35
Luggage compartment lighting 35
Luggage rack 107
Lumbar support 50

M
M Engine dynamics control 91
M Mobility system 139
M+S tires 118
Maintenance 82, 128
Malfunction displays 82
Manual operation
convertible top 44
Manual transmission 70
Master keys 30
with remote control 30
Memory 53, 65
Microfilter 100
Microphone 102
Mirror defrosting 55
Mirror memory 53
Mirrors 55
automatic curb monitor 54
inside rearview 56
outside 55
Mobility system 139
Modifications, technical 5
Mounting the roof rack 113
Multifunction switch 76

N
Navigation system, refer to Owner's Manual for Onboard Computer
Neckrest 50

O
OBD interface socket 130
Odometer 80
Oil
additives 125
capacity 153
quality 125
viscosity 125
Oil change interval, see Service and Warranty Information Booklet for US models / Warranty and Service Guide Booklet for Canadian models
Oil filter change 153
Oil level
checking 124
indicator lamp 19
warning lamp 18
Oil pressure
warning lamp 18
OIL SERVICE 82
Oil types 125
Onboard computer, refer to the Owner's Manual for Onboard Computer
Onboard tool kit 134
Opening and closing
from inside 34
via remote control 31
via the door lock 33
Operating elements 14
Outlets, ventilation 96
Outside temperature display 84

P
Paintwork care, refer to the Caring for your vehicle brochure
Panic mode, trigger alarm 32
Park Distance Control (PDC) 86
Parking aid 86
Parking brake 69
Parking lamps 92
PDC Park Distance Control 86
Pollen 100
Power output 150
Power seat 49
Pressure, tires 25, 115

R
Radiator 153
Radio navigation, refer to Owner's Manual for Radio 85
Radio, refer to the Owner's Manual for Radio
Rain sensor 77
Range 85

CarManuals2.com

Reading lamps
front 94
rear 95
Rear lamps 137
Rear window defroster 99
Rear-entry assist 51
Rearview mirror 55
Recirculated-air mode 99
Refueling 24
Remote control 31
Remote key 30
Replacement key 30, 31
Reporting safety defects 6
Reserve indicator lamp 81
Restraint system 59
Reverse 70
Rims 118
Rollover protection system 63
indicator lamp 19
lowering 63
Roof load capacity 152
Roof-mounted luggage rack 107

S

Safe seating position 48
Safety belts 52
seat-integrated belt system (SGS) 51
Seat
rear-entry assist 51
Seat adjustment 48, 49
lumbar support 49, 50
power seats 49
Seat heating 54
Seat memory 53
Securing cargo 106
Securing child-restraint system 61
Securing devices 107
Sequential M gearbox SMG II 71
indicator lamp 19, 75
Service and Warranty Information Booklet 128
SERVICE ENGINE SOON warning lamp 19
Service interval display 82, 128
Set clock 83
Side airbags 57
Side turn signals
bulb replacement 136
Size 151
Ski bag 104
SMG gearbox 71
Snow chains 119
Socket 103
Spare key 30
Speedometer 16
Sport mode 91
Standing lamps 93
bulb replacement 135
Starting problems 67
Starting the engine 67
Steering wheel lock 66
Steering wheel with multi-function buttons 22
Steering wheel, adjusting 55
Storage compartments 101
Stroke 150
Summer tires 118
Surface ice warning 84
Switching off the engine 69
Symbols used 4

T

Tachometer 16, 80
Tail lamp assembly
replacing bulb 137
Tail lamps 137
replacing bulb 137
Tank capacity 153
Technical data 150
Technical modifications 5
Telephone hookup 102
Telephone, refer to the separate Owner's Manual
Temperature adjustment 98
Temperature display
engine coolant 81
ice warning 84
interior temperature 98
outside temperature 84
Temperature gauge 80
Temperature layering 99
Thigh support area, adjusting 49
Third brake lamp 138
Tilt alarm
deactivate 32, 39
Tilt alarm sensor
remote control 32
Time 83
Tire code 118
Tire damage 115
Tire inflation pressure 25, 115
checking 25
Tire pressure monitor (TPM) 88
Tire replacement 116
Tire tread 115
Tools 134
Torque 150
Towing eyelet 146
Towing the vehicle 146
Track 151
Transmission 70
Transporting children safely 59
Tread depth, tires 115
Tread wear indicator 115
Trip odometer 80
Trunk, see Luggage compartment 35, 152

CarManuals2.com

Trunk lid, see Luggage compartment lid 35
Turn signal indicator 76
indicator lamps 20
replacing bulb 136
Turning circle 151

U
Uniform Tire Quality Grading 117
Upholstery care, refer to the Caring for your vehicle brochure
Used batteries 143

V
Vacuum cleaner, connecting 103
Variable pre-warning zone 80
Vehicle
break-in procedures 110
starting 67
switching off 69
Vehicle battery 143
Vehicle Memory 65
Vehicle weight 152
Ventilation 96
draft-free 99
Viscosity 125

W
Warning lamp Please fasten safety belts 18
Warning lamps 18
Warning messages 82
Warranty and Service Guide Booklet 128
Warranty, refer also to separate booklet 6
Washer fluid
adding 124, 153
indicator lamp 19
Washer/wiper system 77
Washing vehicle, refer to the Caring for your vehicle brochure
Water on roadways
deep water 111
Wear indicator for tires 115
Weights 152
Wheelbase 151
Wheels and tires 118
Wheelslip control, see DSC 87
Width 151
Wind deflector 46
Window condensation, removing 98
Windows
convenience operation 33
defrosting 98
Windshield washer reservoir
filling 124, 153
Windshield wiper blades, replacing 134
Windshield wipers 77
Winter tires 118
Wiper blades, replacing 134
Work in the engine compartment 120

X
Xenon lamps 135

CarManuals2.com

CarManuals2.com

CarManuals2.com

CarManuals2.com

Refueling

BMW recommends Castrol

To ensure that you always have convenient access to all essential information when you stop for fuel, we recommend that you take the time to fill out the adjoining chart by entering the data that apply to your vehicle. Consult the index for individual specifications.

CarManuals2.com

Fuel

Designation	

Please enter your preferred fuel here.

Engine oil

Quality	

The oil quantity between the two marks on the dipstick is approx.
1.4 US quarts/1.3 liters.

Tire inflation pressure

	Summer tires		Winter tires	
	front	rear	front	rear
Up to 2 persons				
4 persons plus luggage				

More about BMW

bmwusa.com

The Ultimate
Driving Machine

01 41 0 156 854 ue

CarManuals2.com

Online Edition for Part-No. 01 41 0 156 854 - © 09/02 BMW AG