BRAKE SYSTEM

SECTION BR

CONTENTS

PRECAUTIONS 4
Supplemental Restraint System (SRS) "AIR BAG" and "SEAT BELT PRE-TENSIONER" 4
Precautions for Brake System 4
Precautions When Working On ABS 5
Precautions for Brake Control 5
Diagnosis Precaution 6
CAN SYSTEM 6
Precaution for Harness Repair 6
CAN SYSTEM 6
Wiring Diagrams and Trouble Diagnosis 7
PREPARATION 8
Commercial Service Tools 8
NOISE, VIBRATION AND HARSHNESS (NVH) TROUBLESHOOTING 9
NVH Troubleshooting Chart 9
ON-VEHICLE SERVICE 10
Checking Brake Fluid Level 10
Checking Brake Line 10
Changing Brake Fluid 10
Brake Burnishing Procedure 10
Bleeding Brake System 11
BRAKE HYDRAULIC LINE 12
Hydraulic Circuit 12
Removal 12
Inspection 12
Installation 13
BRAKE PEDAL AND BRACKET 14
Removal and Installation 14
Inspection 14
Adjustment 14
MASTER CYLINDER 16
Removal 16
Disassembly 16
Inspection 17
Assembly 17
Installation 18
BRAKE BOOSTER 19
On-vehicle Service 19
OPERATING CHECK 19
AIRTIGHT CHECK 19
Removal 19
Inspection 19
OUTPUT ROD LENGTH CHECK 19
Installation 20
VACUUM HOSE 21
Removal and Installation 21
Inspection 22
HOSES AND CONNECTORS 22
CHECK VALVE 22
VACUUM PUMP 23
Removal 23
Installation 24
Inspection 24
Component 25
Disassembly 25
Assembly 25
FRONT DISC BRAKE 27
Component 27
Pad Replacement 27
Removal 28
Disassembly 28
Inspection 28
CALIPER 28
ROTOR 29
Assembly 30
Installation 30
REAR DISC BRAKE (CAM & STRUT TYPE) 31
Component 31
Pad Replacement 31
Removal 33
Disassembly 33
Inspection 34
CALIPER 34
ROTOR 35
Assembly 35
Installation 38
REAR DISC BRAKE (BALL & RAMP TYPE) 39

CONTENTS (Cont'd)

Component 39
Pad Replacement 39
Removal 41
Disassembly 41
Inspection 41
CALIPER 41
ROTOR 42
Installation 42
PARKING BRAKE CONTROL 43
Components 43
Removal and Installation 43
Inspection 43
Adjustment 44

ABS

DESCRIPTION 45
Purpose 45
ABS (Anti-Lock Brake System) Operation 45
ABS Hydraulic Circuit 45
System Components 46
System Description 46
SENSOR 46
CONTROL UNIT 46
ABS ACTUATOR AND ELECTRIC UNIT 46
Component Parts and Harness Connector Location 48
Schematic 49
Wiring Diagram - ABS - 50
CAN COMMUNICATION 53
System Description 53
CAN Communication Unit 53
TYPE 1 54
TYPE 2/TYPE 3 56
TYPE 4 58
TYPE 5/TYPE 6 60
ON BOARD DIAGNOSTIC SYSTEM DESCRIPTION 61
Trouble Diagnosis Chart by Symptom 61
CHECK ITEMS LIST 61
ABS actuator and electric unit Input/Output Signal Standard 61
SPECIFICATIONS DEFINED BY CONSULT-II 61
CONSULT-II Functions 62
CONSULT-II FUNCTION APPLICATION TABLE 62
SELF-DIAGNOSIS 63
DATA MONITOR 66
ACTIVE TEST 67
TROUBLE DIAGNOSIS - BASIC INSPECTION 70
ABS Actuator and Electric Unit 70
Basic Inspection 1 Brake Fluid Level and Leakage Inspection 70
Basic Inspection 2 Inspection for Loose Power Supply Terminal 70
Basic Inspection 3 ABS Warning Lamp Inspection 71
TROUBLE DIAGNOSES FOR SELF-DIAGNOSTIC ITEMS 72
Wheel Sensor System 72
CAN Communication Lines 73
ABS Warning Lamp Does Not Illuminate. (ABS Warning Lamp Does Not Come on When the Ignition Switch is Turned ON.) 73
ABS Warning Lamp Illuminates with Ignition ON, but Does Not Illuminates Off After a Few Seconds. (ABS Warning Lamp has been Illuminated.) 74
TROUBLE DIAGNOSES FOR SYMPTOMS 75
1. ABS Works Frequently 75
2. Unexpected Pedal Action 75
3. Longer Stopping Distance 76
4. ABS Does Not Work 77
5. Pedal Vibration and Noise 77
REMOVAL AND INSTALLATION 79
Wheel Sensors 79
ABS Actuator and Electric Unit 80
REMOVAL 80
INSTALLATION 80
Sensor Rotor 81
REMOVAL 81
INSTALLATION 81

ESP/TCS/ABS

ON-VEHICLE SERVICE 82
Adjustment of Steering Angle Sensor Neutral Position 82
SYSTEM DESCRIPTION 84
System Diagram 84
System Component Parts 85
ESP Function 85
TCS Function 86
ABS Function 86
EBD Function 86
Fail-safe Function 87
ESP/TCS SYSTEM 87
ABS, EBD SYSTEM 87
Hydraulic Circuit Diagram 88
CAN COMMUNICATION 89
System Description 89
CAN Communication Unit 89
TYPE 1 90
TYPE 2/TYPE 3 92
TYPE 4 94
TYPE 5/TYPE 6 96
TROUBLE DIAGNOSIS 97

CONTENTS (Cont'd)

How to Perform Trouble Diagnosis for Quick and Accurate Repair 97
INTRODUCTION 97
DIAGNOSIS FLOWCHART 98
ASKING COMPLAINTS 99
EXAMPLE OF DIAGNOSIS SHEET 99
Component Parts Location 100
Schematic 101
Wiring Diagram - ESP/TCS/ABS - 102
Control Unit Input/Output Signal Standard 107
REFERENCE VALUE FROM CONSULT-II 107
CONSULT-II Functions 110
CONSULT-II FUNCTION APPLICATION TABLE (MAIN ITEMS) 110
CONSULT-II BASIC OPERATION PROCEDURE 111
SELF-DIAGNOSIS 112
DATA MONITOR 115
ACTIVE TEST 118
For Fast and Accurate Diagnosis 120
PRECAUTIONS FOR DIAGNOSIS 120
Basic Inspection 122
BASIC INSPECTION 1 BRAKE FLUID LEVEL, LEAKS, AND BRAKE PADS 122
BASIC INSPECTION 2 POWER SYSTEM TERMINAL LOOSENESS AND BATTERY INSPECTION 122
BASIC INSPECTION 3 ABS WARNING LAMP, ESP OFF INDICATOR LAMP, SLIP INDICATOR LAMP INSPECTION 122
Inspection 1 Wheel Sensor System 123
Inspection 2 Engine System 126
Inspection 3 ESP/TCS/ABS Control Unit System 127
Inspection 4 Pressure Sensor System 127
Inspection 5 Steering Angle Sensor System 129
Inspection 6 Yaw Rate/Side G sensor System 130
Inspection 7 Solenoid and ESP Change-over Valve System 132
Inspection 8 Actuator Motor, Motor Relay, and Circuit 134
Inspection 9 ABS Actuator and Electric Unit (Control Unit) Power Supply and Ground Circuit 136
Inspection 10 Stop Lamp Switch System 138
Inspection 11 Brake Fluid Level Sensor System 139
Inspection 12 When "ST ANG SEN SIGNAL" Appears on Self-diagnostic Results Display 140
Inspection 13 CAN Communication System 140
Inspection 14 When "ESTM VEH SPD SIG" Appears on Self-diagnostic Results Display 142
Inspection 15 ESP OFF Indicator Lamp Does Not Illuminate. 142
Component Inspection 142
ESP OFF SWITCH 142
Symptom 1 Excessive ABS Function Operation Frequency 143
Symptom 2 Unexpected Pedal Reaction 143
Symptom 3 The Braking Distance Is Long 144
Symptom 4 ABS Function Does Not Operate 145
Symptom 5 Pedal Vibration or ABS Operation Sound Occurs 145
Symptom 6 Vehicle Jerks During ESP/TCS/ABS Control 147
WHEEL SENSORS 149
Removal and Installation 149
REMOVAL 149
INSTALLATION 149
SENSOR ROTOR 150
Removal and Installation 150
REMOVAL 150
INSTALLATION 150
ACTUATOR AND ELECTRIC UNIT (ASSEMBLY) 151
Removal and Installation 151
G SENSOR 152
Removal and Installation 152
REMOVAL 152
INSTALLATION 152
STEERING ANGLE SENSOR 153
Removal and Installation 153

SERVICE DATA AND SPECIFICATIONS (SDS) 154
General Specifications 154
Disc Brake 154
Brake Pedal 154
Parking Brake 154

Supplemental Restraint System (SRS) "AIR BAG" and "SEAT BELT PRE-TENSIONER"

NLBR0081

The Supplemental Restraint System such as "AIR BAG" and "SEAT BELT PRE-TENSIONER" used along with a seat belt, helps to reduce the risk or severity of injury to the driver and front passenger for certain types of collision. The SRS system composition which is available to NISSAN MODEL V10 is as follows (The composition varies according to the destination and optional equipment.):

- For a frontal collision
  The Supplemental Restraint System consists of driver air bag module (located in the center of the steering wheel), front passenger air bag module (located on the instrument panel on passenger side), front seat belt pre-tensioners, a diagnosis sensor unit, warning lamp, wiring harness and spiral cable.
- For a side collision
  The Supplemental Restraint System consists of front side air bag module (located in the outer side of front seat), side air bag (satellite) sensor, diagnosis sensor unit (one of components of air bags for a frontal collision), wiring harness, warning lamp (one of components of air bags for a frontal collision).

Information necessary to service the system safely is included in the **RS section** of this Service Manual.

WARNING:

- **To avoid rendering the SRS inoperative, which could increase the risk of personal injury or death in the event of a collision which would result in air bag inflation, all maintenance should be performed by an authorized NISSAN dealer.**
- **Improper maintenance, including incorrect removal and installation of the SRS, can lead to personal injury caused by unintentional activation of the system. For removal of Spiral Cable and Air Bag Module, see the RS section.**
- **Do not use electrical test equipment on any circuit related to the SRS unless instructed to in this Service Manual. Spiral cable and wiring harnesses covered with yellow insulation tape either just before the harness connectors or for the complete harness are related to the SRS.**

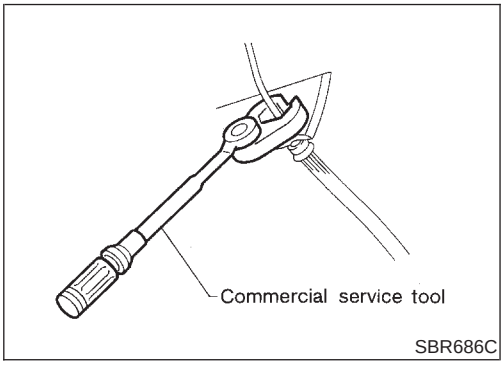

Precautions for Brake System

NLBR0002

- **Recommended fluid is brake fluid "DOT 3" or "DOT 4".**
- **Never reuse drained brake fluid.**
- **Be careful not to splash brake fluid on painted areas.**
- **To clean or wash all parts of master cylinder, disc brake caliper and wheel cylinder, use clean brake fluid.**
- **Never use mineral oils such as gasoline or kerosene. They will ruin rubber parts of the hydraulic system.**
- **Use flare nut wrench when removing and installing brake tube.**
- **Always torque brake lines when installing.**
- **Burnish the brake contact surfaces after refinishing or replacing rotors, after replacing pads, or if a soft pedal occurs at very low mileage.**
  Refer to "Brake Burnishing Procedure", "ON-VEHICLE SERVICE", BR-10.

WARNING:

- **Clean brake pads with a waste cloth, then wipe with a dust collector.**

Precautions When Working On ABS

NLBR0149

- **Use recommended tyres in combination with ABS.**
- **Please fit tyres or studded tyres, etc. with the same size.**
- **If different sizes of tyres, or tyres other than the ones recommended for use with the ABS, are fitted, stopping distance will increase and control and stability could deteriorate.**
- **When changing brake pads, please use Nissan genuine parts.**
- **When fitting radios etc, do not position the radio itself, antenna, or antenna cables within an area of about 100 mm (3.94 in) of the control unit.**
- **When doing any work that requires electro-welding, first remove the control unit.**
- **Please take care when taking a power supply for the audio, lamps etc., not to take this from any ABS-related harness. (Please refer to the electrical wiring diagrams for ABS-related harnesses)**
- **Before working, turn ignition switch OFF and disconnect electrical connectors of ABS actuator and electric unit (control unit) or battery cables.**

Precautions for Brake Control

NLBR0157

- During ABS operation, brake pedal lightly vibrates and a mechanical noise may be heard. This is normal.
- Just after starting vehicle after ignition switch ON, brake pedal may vibrate or motor operating noise may be heard from engine room. This is a normal status of operation check.
- Stopping distance may be longer than that of vehicles without ABS when vehicle drives on rough, gravel, or snow-covered (fresh, deep snow) roads.
- When an error is indicated by ABS or another warning lamp, collect all necessary information from customer (what symptoms are present under what conditions) and check for simple causes before starting diagnostic servicing. Besides electrical system inspection, check brake booster operation, brake fluid level, and fluid leaks.
- If tire size and type are used in an improper combination, or brake pads are not Genuine NISSAN parts, stopping distance or steering stability may deteriorate.
- If there is a radio, antenna, or antenna lead-in wire (including wiring) near control module, ABS function may have a malfunction or error.
- If aftermarket parts (car stereo, CD player, etc.) have been installed, check for incidents such as harness pinches, open circuits, and improper wiring.
- If the following components are replaced with non-genuine components or converted, the ESP OFF indicator lamp and SLIP indicator lamp may turn on or the ESP system may not operate properly. Components related to suspension (Shock Absorber, Strut, Spring, Bush, etc.), Tires, wheels (exclude specified size), components related to brake (Pad, Rotor, Caliper, etc.), Components related to engine (Muffler, ECM, etc.), Components related to body reinforcement (Roll bar, Tower bar, etc.).
- Driving in the condition of breakage or excessive wear of the suspension, tires or components related to the brakes may

cause the ESP OFF indicator lamp and the SLIP indicator lamp to turn on, and the ESP system may not operate properly.

- When the TCS or ESP is activated by sudden acceleration or sudden turn, some noise may occur. The noise is a result of the normal operation of the TCS and ESP.
- When driving on roads which have extreme slopes (such as mountainous roads) or high banks (such as sharp carves on a freeway), the ESP may not operate normally, or the ESP warning lamp and the SLIP indicator lamp may turn on. However, this is not a problem if normal operation can be resumed after restarting the engine.
- Sudden turns (such as spin turns, acceleration turns), drifting, etc. When ESP function is OFF (ESP SW ON) may cause the yaw rate/side G sensor system indicate a malfunction. However this is not a malfunction if normal operation can be resumed after restarting the engine.

Diagnosis Precaution

NLBR0158

CAN SYSTEM

NLBR0158S01

- Do not apply voltage of 7.0V or higher to terminal to be measured.
- Maximum open terminal voltage of tester in use shall be 7.0V or lower.
- Before checking harnesses, turn ignition switch to OFF and disconnect battery negative cable.

Precaution for Harness Repair

NLBR0159

CAN SYSTEM

NLBR0159S01

- Area to be repaired shall be soldered, and wrapped with a tape [Be sure that fraying of twisted wire shall be within 110 mm (4.33 in)].

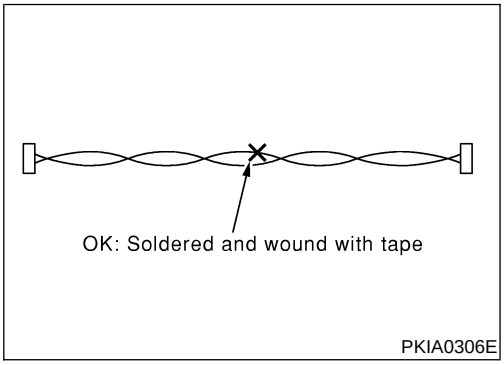

- Do not make a bypass connection to repaired area. (If it is done, branch part will be removed and characteristics of twisted wire will be lost.)

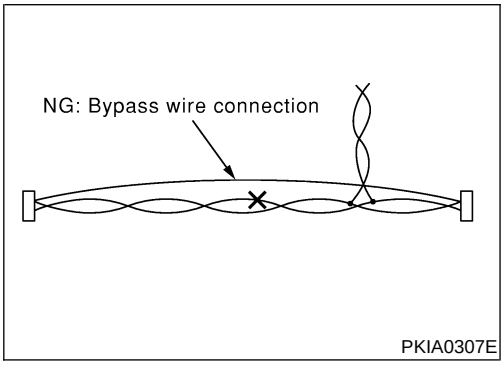

Wiring Diagrams and Trouble Diagnosis

NLBR0003

When you read wiring diagrams, refer to the following:

- GI-11, “HOW TO READ WIRING DIAGRAMS”
- EL-12, “POWER SUPPLY ROUTING”

When you perform trouble diagnosis, refer to the following:

- GI-32, “HOW TO FOLLOW TEST GROUPS IN TROUBLE DIAGNOSIS”
- GI-21, “HOW TO PERFORM EFFICIENT DIAGNOSES FOR AN ELECTRICAL INCIDENT”

Commercial Service Tools

NLBR0004

Tool name	Description	
1 Flare nut crowfoot 2 Torque wrench	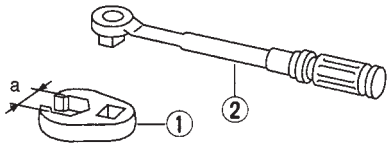 NT360	Removing and installing each brake piping **a: 10 mm (0.39 in)/12 mm (0.47 in)**
Brake fluid pressure gauge	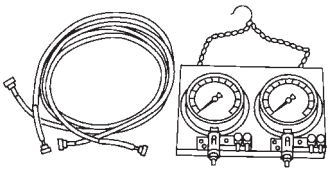 NT151	Measuring brake fluid pressure

NVH Troubleshooting Chart

NLBR0005S01

Use the table below to help you find the cause of the symptom. If necessary, repair or replace these parts.

Reference page			BR-27, 31	BR-27, 31	BR-27, 31	—	—	BR-29, 35	—	—	—	BR-29, 35	NVH in AX section	NVH in AX, SU section	NVH in AX section	NVH in AX section	NVH in ST section
SUSPECTED PARTS (Possible cause)			Pads - damaged	Pads - uneven wear	Shims damaged	Rotor imbalance	Rotor damage	Rotor runout	Rotor deformation	Rotor deflection	Rotor rust	Rotor thickness variation	DRIVE SHAFT	AXLE AND SUSPENSION	TIRES	ROAD WHEEL	STEERING
Symptom	BRAKE	Noise	X	X	X								X	X	X	X	X
		Shake				X							X	X	X	X	X
		Shimmy, Judder				X	X	X	X	X	X	X		X	X	X	X

X: Applicable

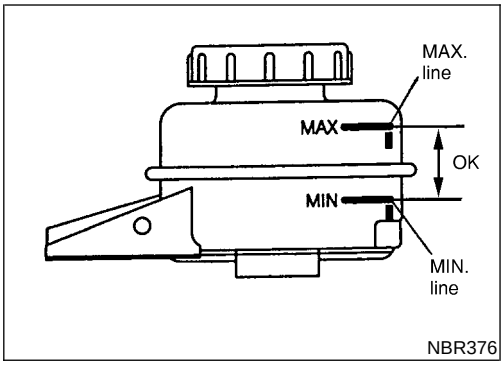

NBR376

Checking Brake Fluid Level

NLBR0006

- Check fluid level in reservoir tank. It should be between Max and Min lines on reservoir tank.
- If fluid level is extremely low, check brake system for leaks.
- Release parking brake lever and see if brake warning lamp goes off. If not, check brake system for leaks.

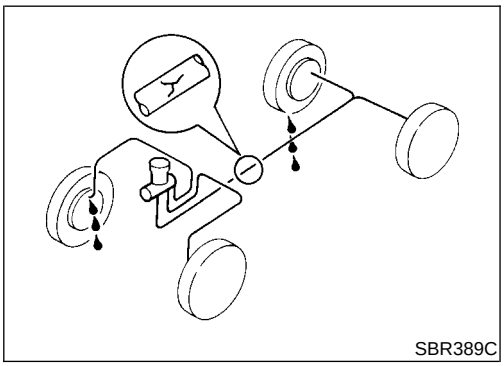
SBR389C

Checking Brake Line

NLBR0007

CAUTION:

If leakage occurs around joints, retighten or, if necessary, replace damaged parts.

1. Check brake lines (tubes and hoses) for cracks, deterioration or other damage. Replace any damaged parts.
2. Check for oil leakage by fully depressing brake pedal while engine is running.

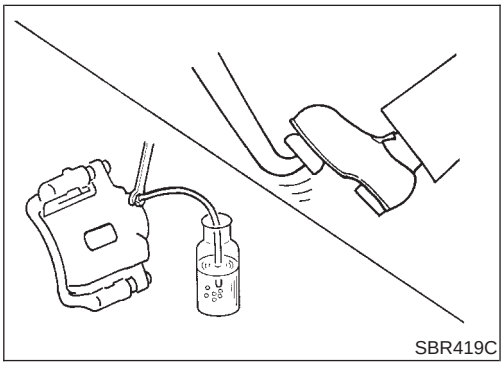
SBR419C

Changing Brake Fluid

NLBR0008

CAUTION:

- **Refill with new brake fluid “DOT 3” or “DOT 4”.**
- **Always keep fluid level higher than minimum line on reservoir tank.**
- **Never reuse drained brake fluid.**
- **Be careful not to splash brake fluid on painted areas; it may cause paint damage. If brake fluid is splashed on painted areas, wash it away with water immediately.**

1. Clean inside of reservoir tank, and refill with new brake fluid.
2. Connect a vinyl tube to each air bleeder valve.
3. Drain brake fluid from each air bleeder valve by depressing brake pedal while keeping reservoir level higher than minimum line by adding new brake fluid.
4. Repeat until new brake fluid comes out of each air bleeder valve.
   Use same procedure as in bleeding hydraulic system to refill brake fluid. Refer to “Bleeding Brake System”, BR-11 and “Air Bleeding Procedure”, CL-10.

Brake Burnishing Procedure

NLBR0036

Burnish the brake contact surfaces according to the following procedure after refinishing or replacing rotors, after replacing pads, or if a soft pedal occurs at very low mileage.

CAUTION:

Only perform this procedure under safe road and traffic conditions. Use extreme caution.

1. Drive the vehicle on a straight smooth road at 50 km/h (31 MPH).
2. Use medium brake pedal/foot effort to bring the vehicle to a complete stop from 50 km/h (31 MPH). Adjust brake pedal/foot

pressure such that vehicle stopping time equals 3 to 5 seconds.

3. To cool the brake system, drive the vehicle at 50 km/h (31 MPH) for 1 minute without stopping.
4. Repeat steps 1 to 3, 10 times or more to complete the burnishing procedure.

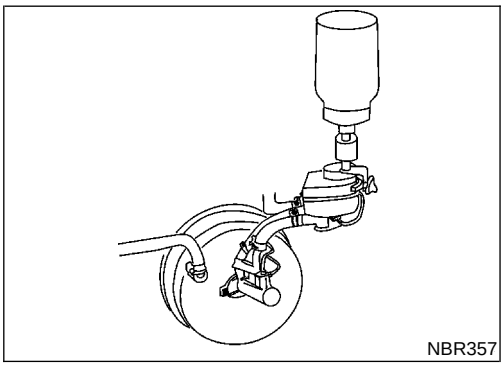
NBR357

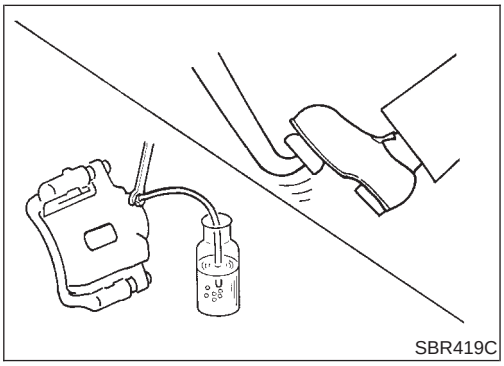
SBR419C

Bleeding Brake System

NLBR0009

CAUTION:

- **Carefully monitor brake fluid level at master cylinder during bleeding operation.**
- **Fill reservoir with new brake fluid "DOT 3" or "DOT 4". Make sure it is full at all times while bleeding air out of system.**
- **Place a container under master cylinder to avoid spillage of brake fluid.**
- **For models with ABS, turn ignition switch OFF and disconnect ABS actuator connectors or battery ground cable.**
- Bleed air in the following order.
  Right rear brake → Left front brake → Left rear brake → Right front brake

1. Connect a transparent vinyl tube to air bleeder valve.
2. Fully depress brake pedal several times.
3. With brake pedal depressed, open air bleeder valve to release air.
4. Close air bleeder valve.
5. Release brake pedal slowly.
6. Repeat steps 2. through 5. until clear brake fluid comes out of air bleeder valve.

Hydraulic Circuit

NLBR0010

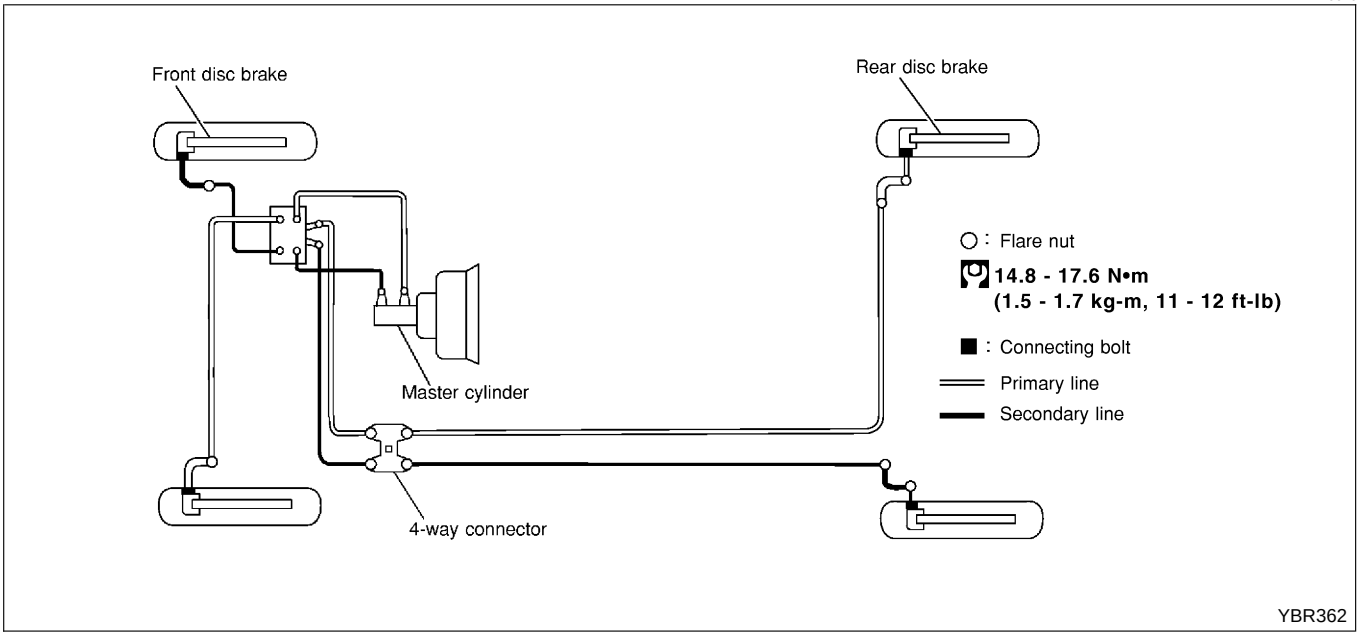

Removal

NLBR0011

CAUTION:

- **Be careful not to splash brake fluid on painted areas; it may cause paint damage. If brake fluid is splashed on painted areas, wash it away with water immediately.**
- **All hoses must be free from excessive bending, twisting and pulling.**
- **For ball & ramp type rear caliper, care should be taken as not to let air enter the cylinder body.**

1. Remove flare nut connecting brake tube and hose, then withdraw lock spring.
2. Cover openings to prevent entrance of air and dirt whenever disconnecting brake line.

Inspection

NLBR0012

Check brake lines (tubes and hoses) for cracks, deterioration or other damage. Replace any damaged parts.

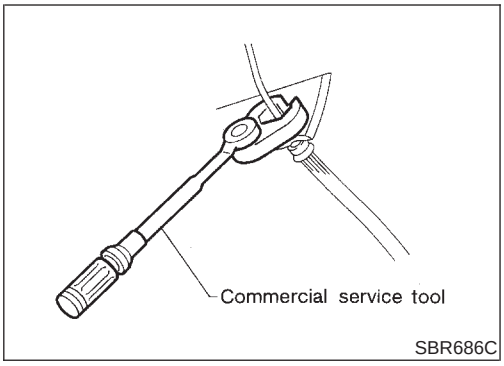

Installation

NLBR0013

CAUTION:

- **Refill with new brake fluid “DOT 3” or “DOT 4”.**
- **Never reuse drained brake fluid.**

1. Tighten all flare nuts and connecting bolts.

   Specification:

   Flare nut

   14.8 - 17.6 N·m (1.5 - 1.7 kg-m, 11 - 12 ft-lb)

   Connecting bolt

   17 - 20 N·m (1.7 - 2.0 kg-m, 12 - 14 ft-lb)
2. Refill until new brake fluid comes out of each air bleeder valve.
3. Bleed air. Refer to “Bleeding Brake System”, BR-11, and “Air Bleeding Procedure”, CL-10.

Removal and Installation

NLBR0015

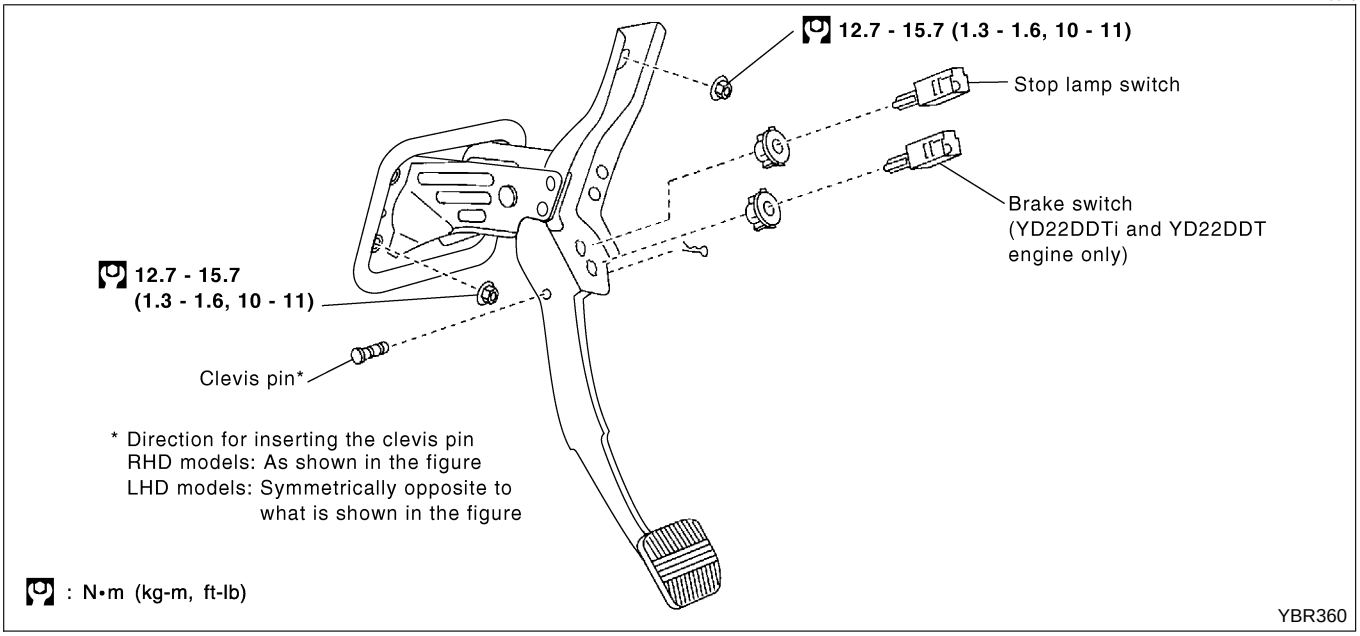

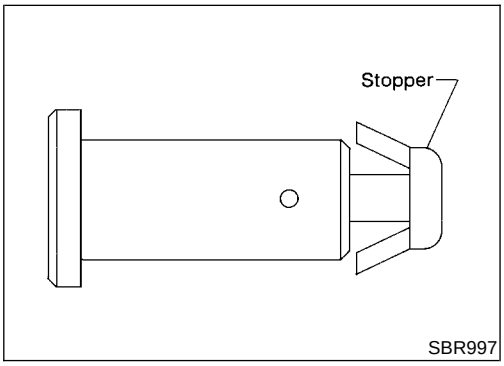

Inspection

NLBR0016

Check brake pedal for following items.

- Brake pedal bend
- Clevis pin deformation
- Crack of any welded portion
- Crack or deformation of clevis pin stopper

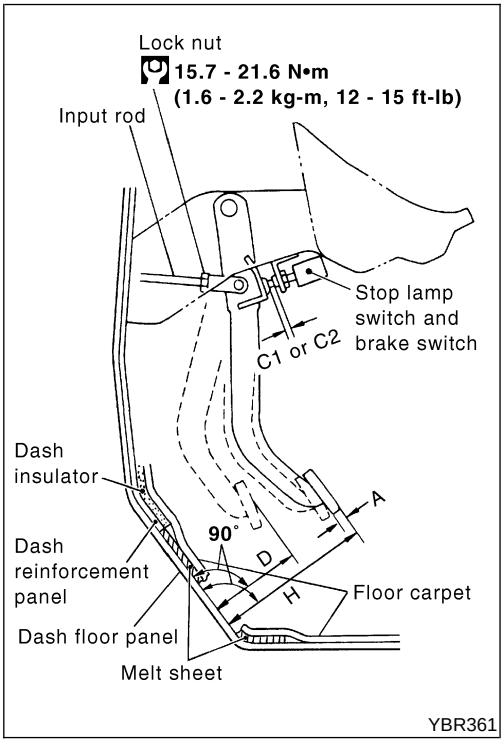

Adjustment

NLBR0017

Check brake pedal free height from metal panel. Adjust if necessary.

H: Free height

Refer to SDS, BR-154.

C_1, C_2: Clearance between pedal stopper and threaded end of stop lamp switch and brake switch.

0.75 - 2.00 mm (0.0295 - 0.0787 in)

D: Depressed height

LHD/RHD (M/T): 60 -70 (2.36 - 2.76 in)

Under force of 490 N (50 kg, 110 lb) with engine running.

A: Pedal free play at pedal pad

1.0 - 3.0 mm (0.039 - 0.118 in)

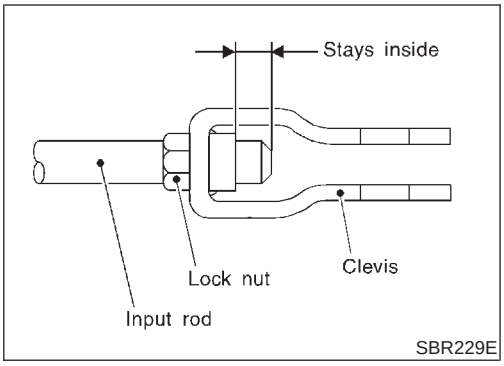

1. Loosen lock nut and adjust pedal free height by turning brake booster input rod. Then tighten lock nut.
2. Check pedal free play.
   Make sure that stop lamps go off when pedal is released.
3. Check brake pedal's depressed height while engine is running. If lower than specification, check brake system for leaks, accumulation of air or any damage to components (master cylinder, wheel cylinder, etc.), then make necessary repairs.

Removal

NLBR0117

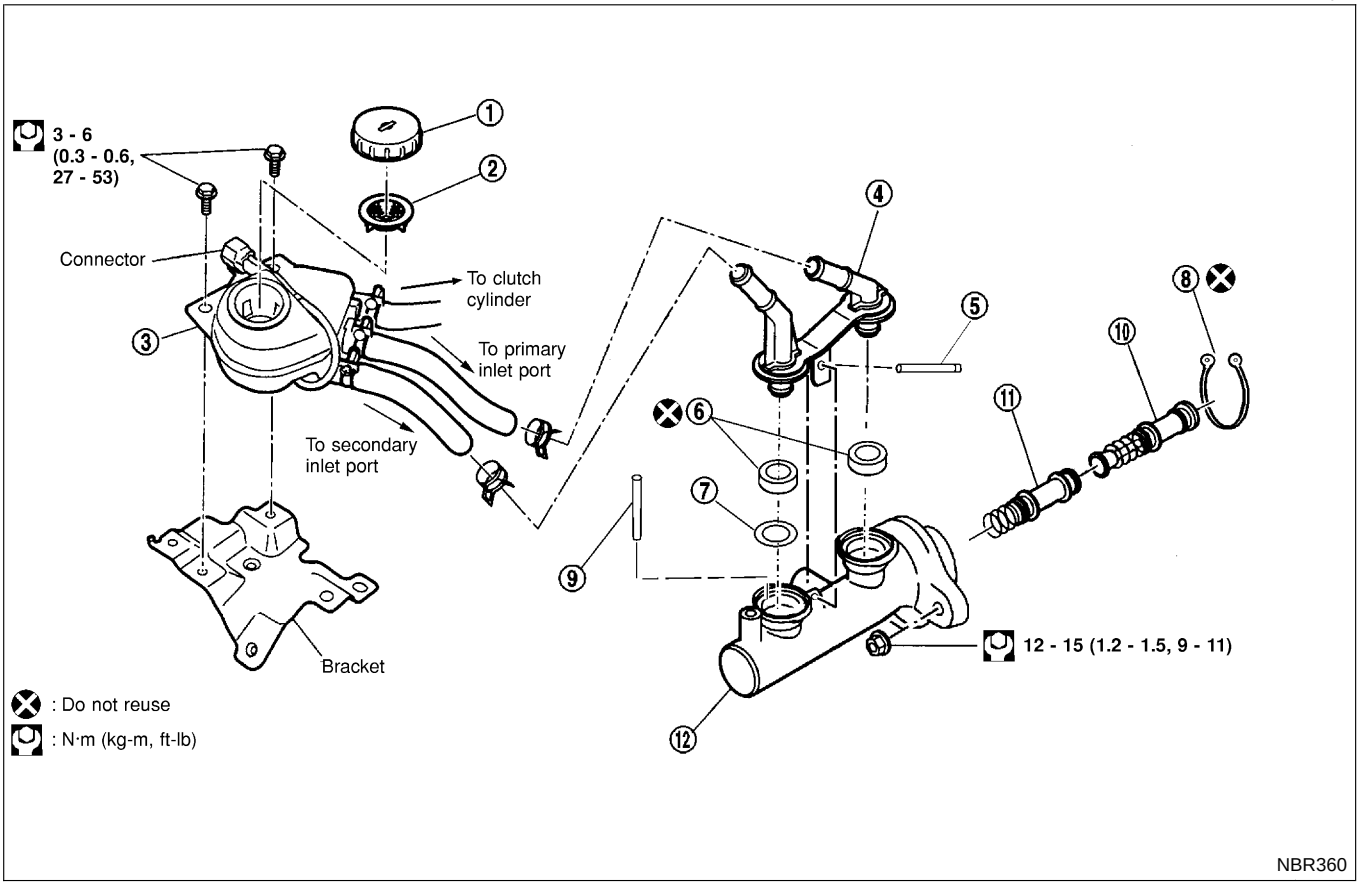

1. Reservoir cap
2. Filter
3. Reservoir tank
4. Adapter
5. Elastic pin
6. Seal
7. Washer
8. Circlip
9. Piston stopper pin
10. Primary piston assembly
11. Secondary piston assembly
12. Cylinder body

CAUTION:
Be careful not to splash brake fluid on painted areas; it may cause paint damage. If brake fluid is splashed on painted areas, wash it away with water immediately.

1. Connect a vinyl tube to air bleeder valve.
2. Drain brake fluid from each front caliper air bleeder valve, depressing brake pedal to empty fluid from master cylinder.
3. Remove brake pipe flare nuts.
4. Disconnect hoses from adapter.
5. Remove master cylinder mounting nuts.

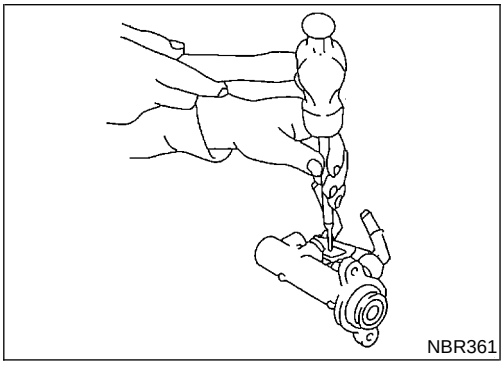

Disassembly

NLBR0118

1. Drive out elastic pin from cylinder body.
2. Remove adapter, washer and seals.

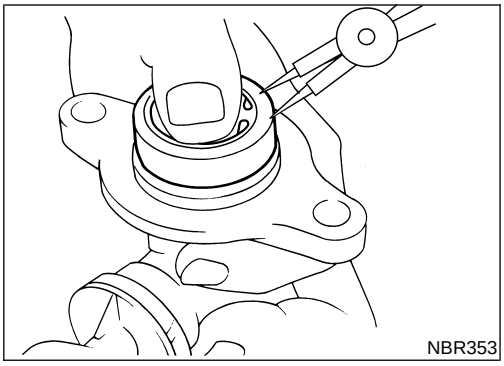
NBR353

3. Remove the circlip with suitable pliers while piston is pushed into cylinder.

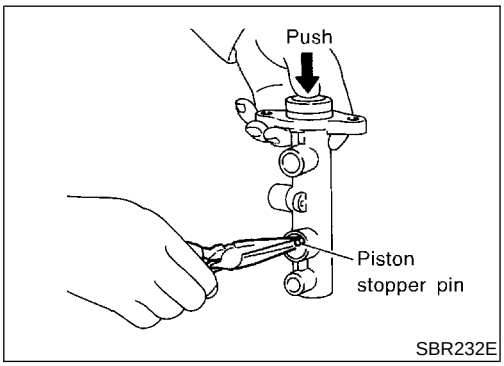

SBR232E

4. Remove piston stopper pin while piston is pushed into cylinder.
5. Remove piston assemblies.
   If it is difficult to remove secondary piston assembly, gradually apply compressed air through fluid outlet.

Inspection

NLBR0119

Check for the following items.
Replace any part if damaged.
Master cylinder:

- Pin holes or scratches on inner wall.

Piston:

- Deformation or scratches on piston cups.

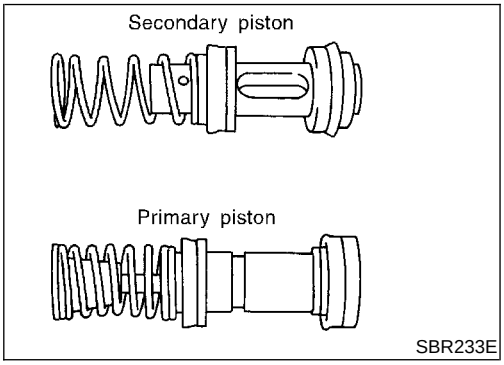

SBR233E

Assembly

NLBR0120

1. Insert secondary piston assembly. Then insert primary piston assembly.
   - **Pay attention to alignment of secondary piston slit with valve stopper mounting hole of cylinder body.**

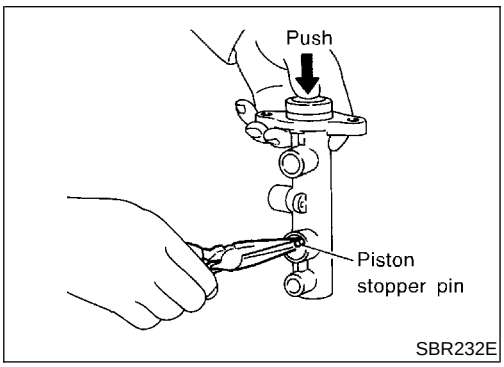

SBR232E

2. Install piston stopper pin while piston is pushed into cylinder. Then secure the primary and secondary piston assemblies with new circlip.
3. Insert washer and push reservoir seals and adapter into cylinder body.
4. Install elastic pin.

Installation

NLBR0121

CAUTION:

- **Refill with new brake fluid “DOT 3” or “DOT 4”.**
- **Never reuse drained brake fluid.**

1. Place master cylinder onto brake booster and secure mounting nuts lightly.
2. Torque mounting nuts.
   : 13 - 15 N·m (1.3 - 1.5 kg-m, 9 - 11 ft-lb)

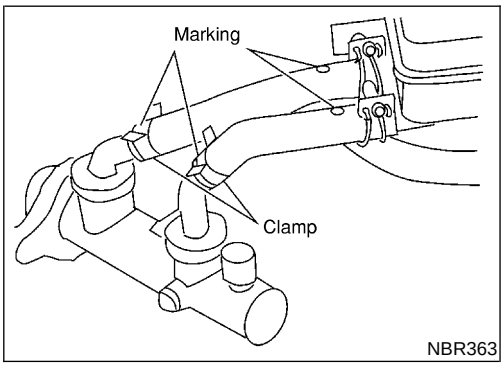

3. Check hoses for damage. If the hoses show cracks or damage, replace the hose.
4. Insert the dot (coloured) mark hoses to the primary - and secondary inlet ports adapter. Then secure it with clamps.

Hose marking

Booster model	M215T	S255
Primary-inlet port	White dot	Blue dot
Secondary-inlet port	Yellow dot	Green dot

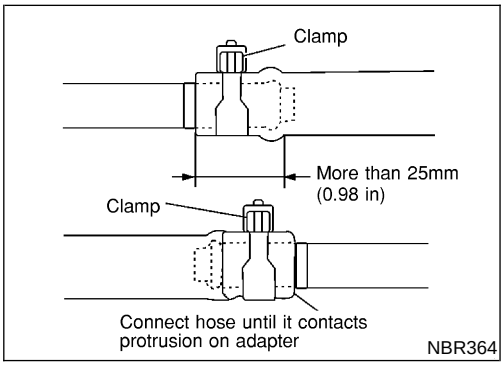

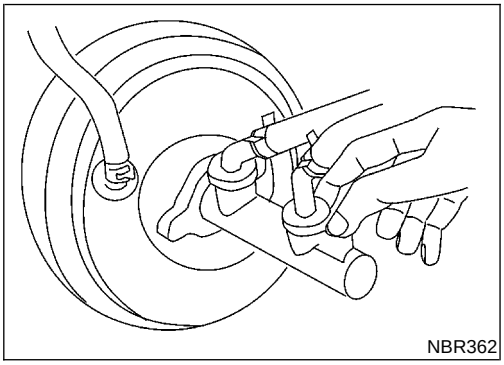

5. Fill up reservoir tank with new brake fluid.
6. Plug all ports on master cylinder with fingers to prevent air suction while releasing brake pedal.
7. Have driver depress brake pedal slowly several times until no air comes out of master cylinder.
8. Fit brake lines to master cylinder.
9. Tighten flare nuts.
   : 15 - 18 N·m (1.5 - 1.8 kg-m, 11 - 13 ft-lb)
10. Bleed air procedure from brake and clutch system. Refer to “Bleeding Brake System”, BR-11 and “Air Bleeding Procedure”, CL-10.

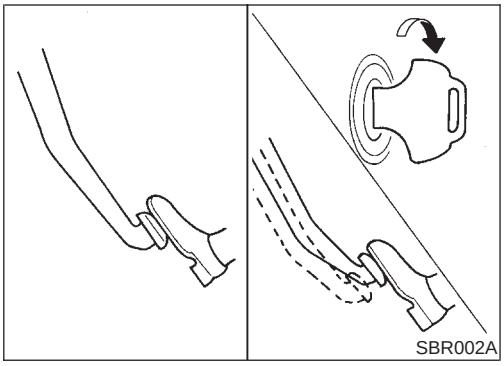
SBR002A

On-vehicle Service

NLBR0023

OPERATING CHECK

NLBR0023S01

1. Stop engine and depress brake pedal several times. Check that pedal stroke does not change.
2. Depress brake pedal, then start engine. If pedal goes down slightly, operation is normal.

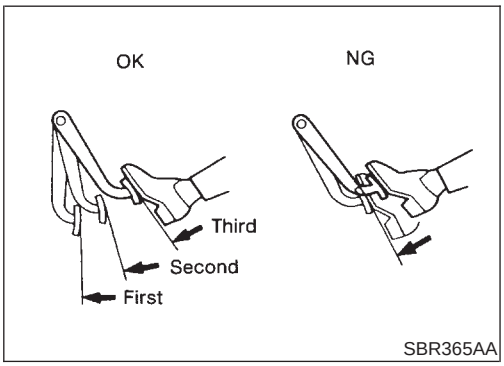

SBR365AA

AIRTIGHT CHECK

NLBR0023S02

1. Start engine, and stop it after one or two minutes. Depress brake pedal several times slowly. The pedal should go further down at the first time, and then it should gradually rise thereafter.
2. Depress brake pedal while engine is running, and stop engine with pedal depressed. The pedal stroke should not change after holding pedal down for **30 seconds.**

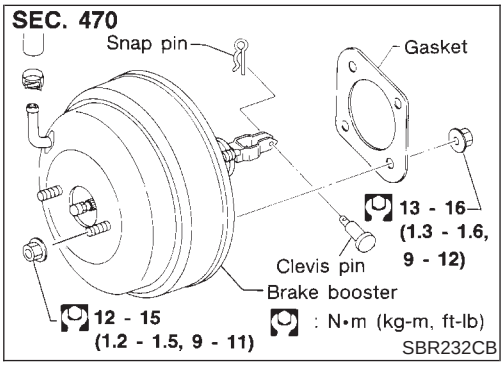

SBR232CB

Removal

NLBR0024

CAUTION:

- **Be careful not to splash brake fluid on painted areas; it may cause paint damage. If brake fluid is splashed on painted areas, wash it away with water immediately.**
- **Be careful not to deform or bend brake pipes, during booster removal.**

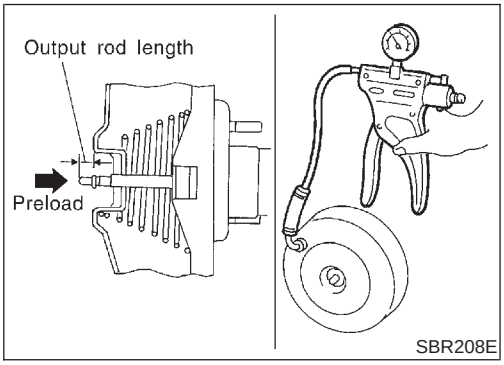

SBR208E

Inspection

NLBR0025

OUTPUT ROD LENGTH CHECK

NLBR0025S01

1. Apply vacuum of −66.7 kPa (−667 mbar, −500 mmHg, −19.69 inHg) to brake booster with a handy vacuum pump.
2. Add preload of 19.6 N (2 kg, 4.4 lb) to output rod.
3. Check output rod length.

   Specified length:

   Without ESP

   10.275 - 10.525 mm (0.4045 - 0.4144 in)

   With ESP

   4.9 - 5.1 mm (0.193 - 0.201 in)

Installation

NLBR0026

CAUTION:

- **Be careful not to deform or bend brake pipes, during booster installation.**
- **Replace clevis pin if damaged.**
- **Refill with new brake fluid “DOT 3” or “DOT 4”.**
- **Never reuse drained brake fluid.**
- **Take care not to damage brake booster mounting bolt thread during installation. Due to the acute angle of installation, the threads can be damaged with the dash panel.**

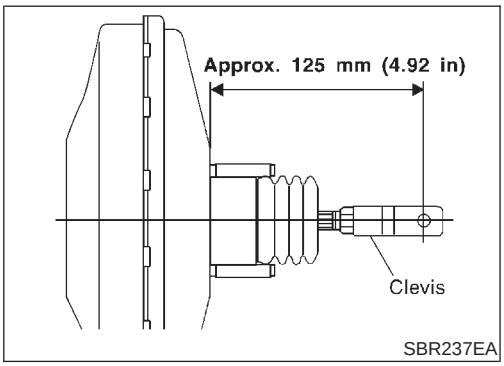

1. Before fitting booster, temporarily adjust clevis to dimension shown.
2. Fit booster, then secure mounting nuts (brake pedal bracket to master cylinder) lightly.
3. Connect brake pedal and booster input rod with clevis pin.
4. Secure mounting nuts.

   Specification:

   13 - 16 N·m (1.3 - 1.6 kg-m, 9 - 12 ft-lb)
5. Install master cylinder. Refer to “Installation” in “MASTER CYLINDER”, BR-18.
6. Bleed air. Refer to “Bleeding Brake System”, BR-11 and “Air Bleeding Procedure”, CL-10.

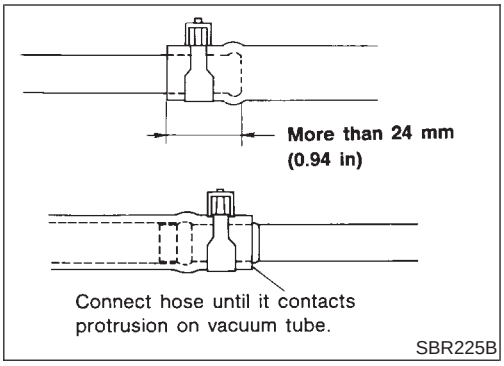

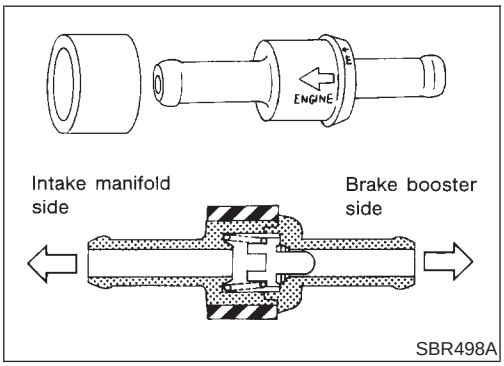

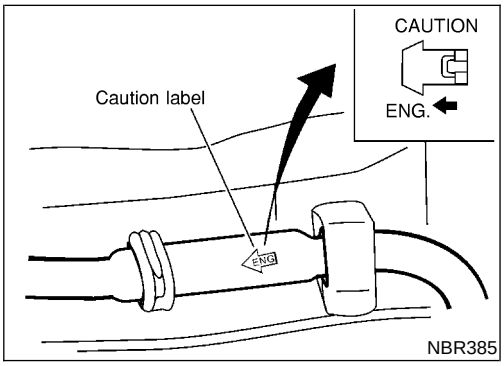

Removal and Installation

NLBR0027

CAUTION:

When installing vacuum hoses, pay attention to the following points.

- **Do not apply any oil or lubricants to vacuum hose and check valve.**
- **Insert vacuum tube into vacuum hose as shown.**
- **Install check valve, paying attention to its direction.**

Inspection

=NLBR0028

HOSES AND CONNECTORS

NLBR0028S01

Check vacuum lines, connections and check valve for airtightness, improper attachment chafing and deterioration.

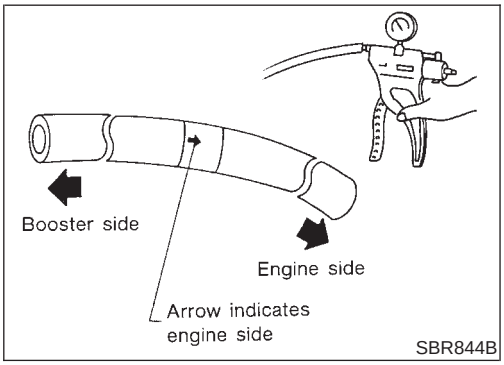

SBR844B

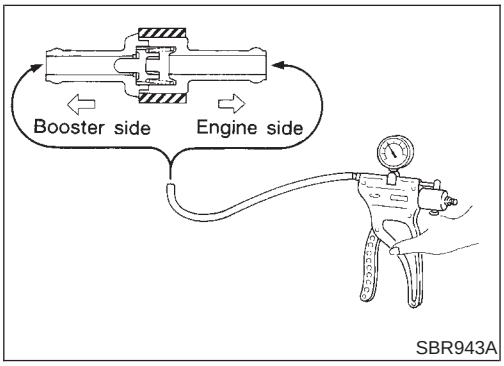

SBR943A

CHECK VALVE

NLBR0028S02

Check vacuum with a vacuum pump.

Connect to booster side	Vacuum should exist.
Connect to engine side	Vacuum should not exist.

Removal

NLBR0123

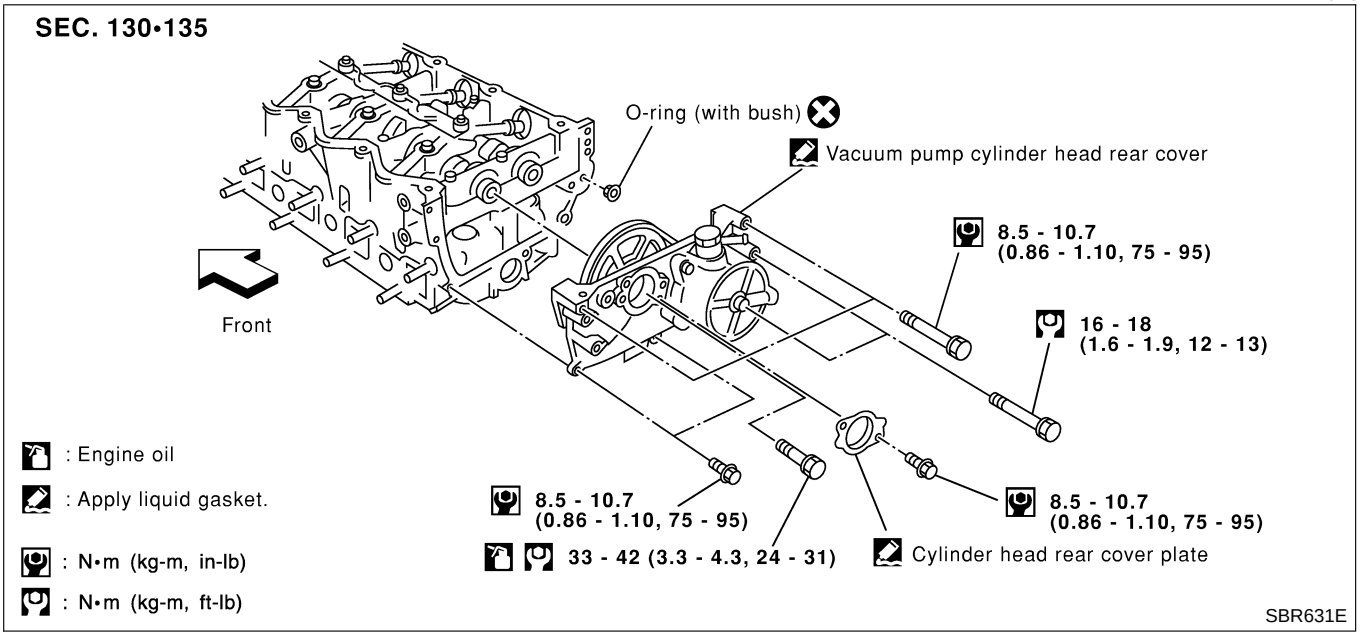

1. Remove parts shown below.
- Air duct, air cleaner case (upper)
- Engine cover
- Rocker cover
- Exhaust manifold cover
- EGR tube
2. Disconnect vacuum hose from vacuum pump.
3. Remove cylinder head rear cover plate.
- Use a tool such as seal cutter (SST) to remove.
4. Loosen and remove rear cam sprocket installation bolts.
- Camshaft should not be attached. Using engine inner resistance, loosen installation bolts.

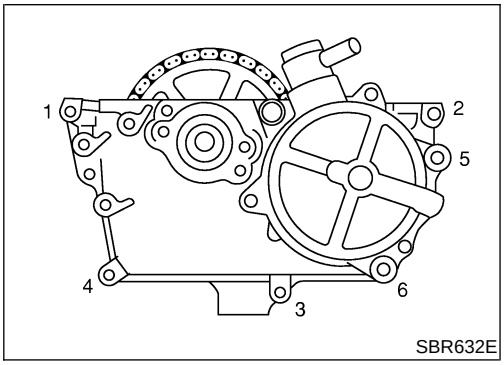

5. Remove vacuum pump and cylinder head rear cover assembly.
- Remove and install vacuum pump, sprocket, drive chain, and chain guide as an assembly.
- Loosen mounting bolts in the reverse order of the numbers shown in the figure to the left.
- Remove only bolts that are shown in the figure. (Be especially careful not to remove M6 bolts on the vacuum pump.)
- Use a tool such as a seal cutter (SST).

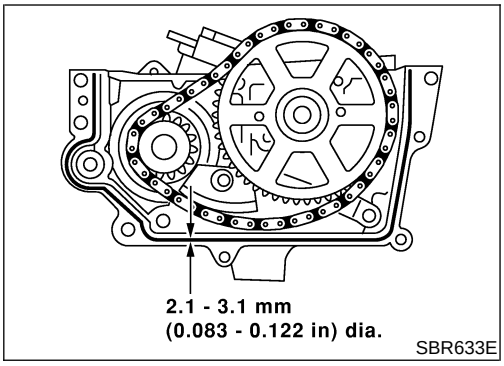

Installation

NLBR0124

1. Assemble vacuum pump and cylinder head rear cover assembly, referring to “Component” in the next page.
2. Install vacuum pump and cylinder head rear cover assembly to cylinder head.

a. Apply ThreeBond 1207C (KP510 00150) without breaks to the location shown in the figure to the left.

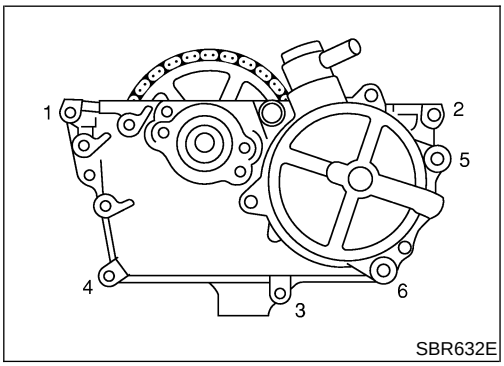

b. Tighten the mounting bolts in the numerical order shown by the figure to the left.

3. Install rear cam sprocket installation bolts.
4. Remove sprocket retaining two M6 bolts.

- M6 bolts will be used for installation.

5. Tighten rear cam sprocket installation bolts.

- Camshaft should not be fixed. Using engine inner resistance, tighten installation bolts.

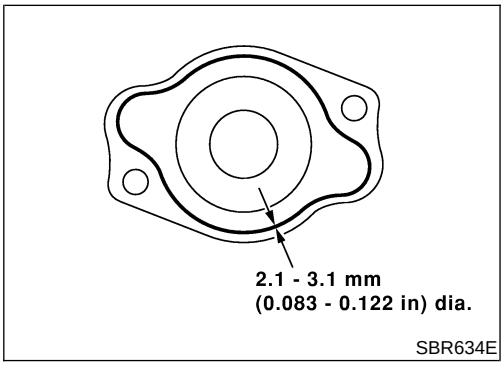

6. Install cylinder head rear cover plate.

- Apply ThreeBond 1207C (KP510 00150) without breaks to the location shown by the figure to the left.

7. Install parts in the reverse order of removal.

CAUTION:

If the engine is started with vacuum pump released (vacuum hose disconnected), it causes increase of blowby gas amount, and engine damage may result. When starting the engine, be sure to close vacuum circuit.

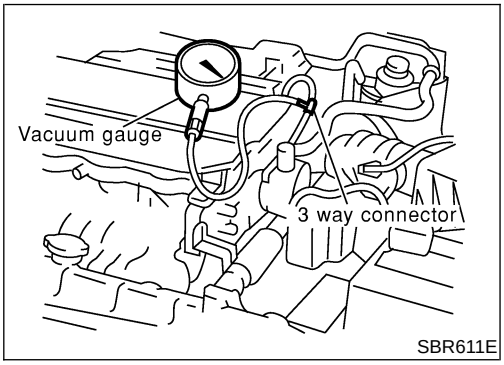

Inspection

NLBR0125

- Remove vacuum hose. Then, connect vacuum gauge with three-way connector.
- Install three-way connector to the area where vacuum pump negative pressure can be directly measured. (The figure shown an example.)
- Start the engine, then measure negative pressure.

  Standard: −86.6 to −101.3 kPa (−866 to −1,013 mbar, −650 to −760 mmHg, −25.59 to −29.92 inHg)

- If it is not within standard, inspect for suction of air in the middle of route and measure it again.
- If it is still not within standard value, replace the vacuum pump.

Component

NLBR0126

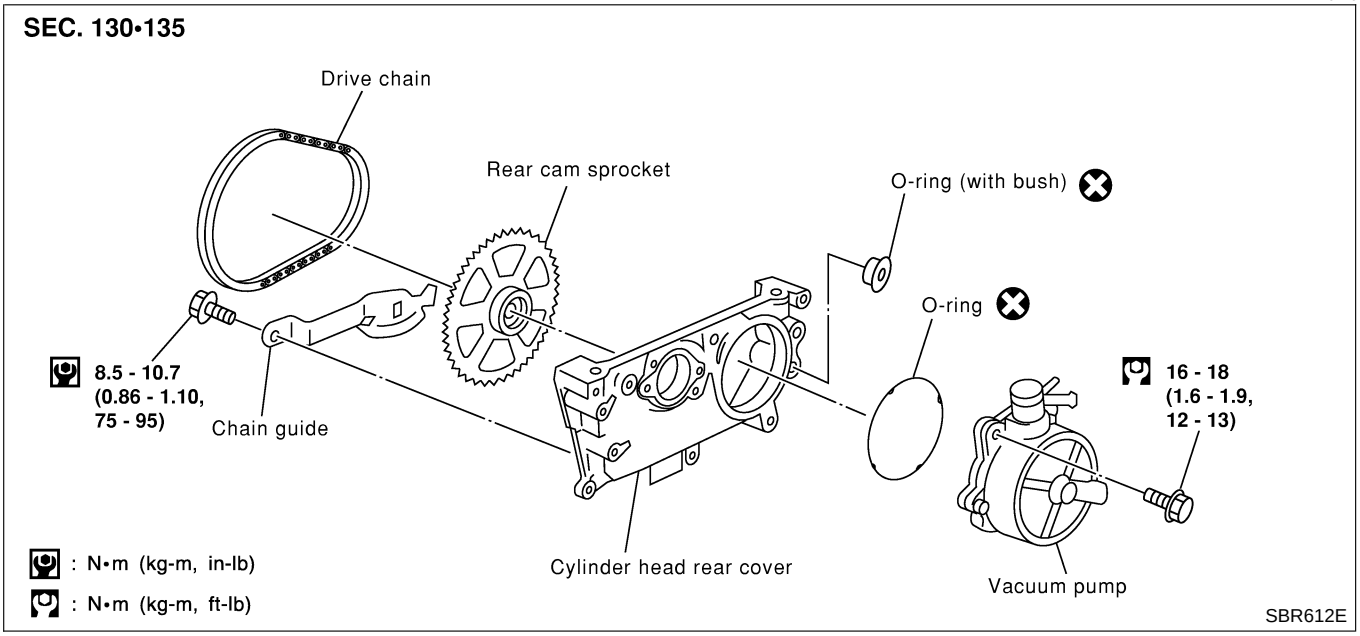

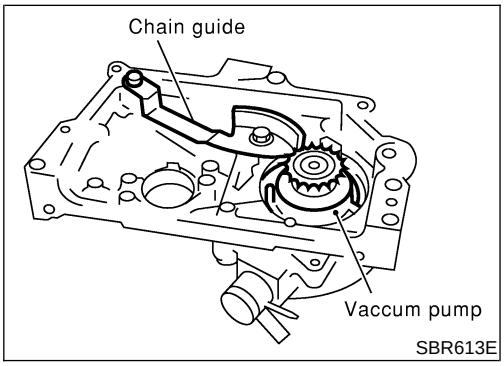

Disassembly

NLBR0136

Disassemble the components, referring to the “Component”, then remove vacuum pump.

CAUTION:

Do not disassemble vacuum pump. (Do not loosen three M6 bolts.)

Assembly

NLBR0127

Install all parts to cylinder head rear cover as follows.

1. Install vacuum pump.
2. Install chain guide temporarily.

- Adjust the chain guide position by the method explained in step 5.

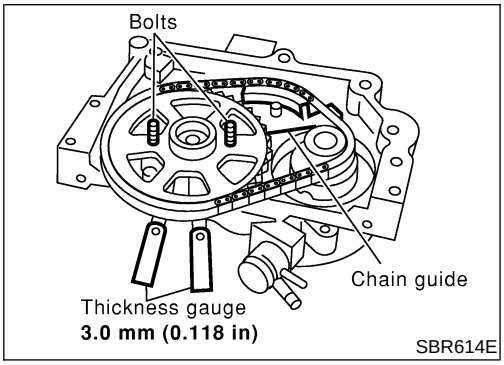

3. Install rear cam sprocket.

- Installation direction of sprocket is not specified.
- Insert 2 thickness gauges [3.0 mm (0.118 in)] between cover and rear cam sprocket (shown in the figure). Insert 2 bolts [M6, thread length: 35 - 40 mm (1.38 - 1.57 in)] into sprocket to retain it to cover.
- Use thickness gauges [3.0 mm (0.118 in)] for chain alignment between vacuum pump sprocket and cam sprocket.

4. Attach drive chain to rear cam sprocket and vacuum pump sprocket.
5. Tighten chain guide installation bolt while pressing chain guide

lightly [approximately 9.8 N (1.0 kg, 2.2 lb)].

6. Remove thickness gauges (2).

- Leave sprocket retaining bolts (M6) until installation.

Component

NLBR0030

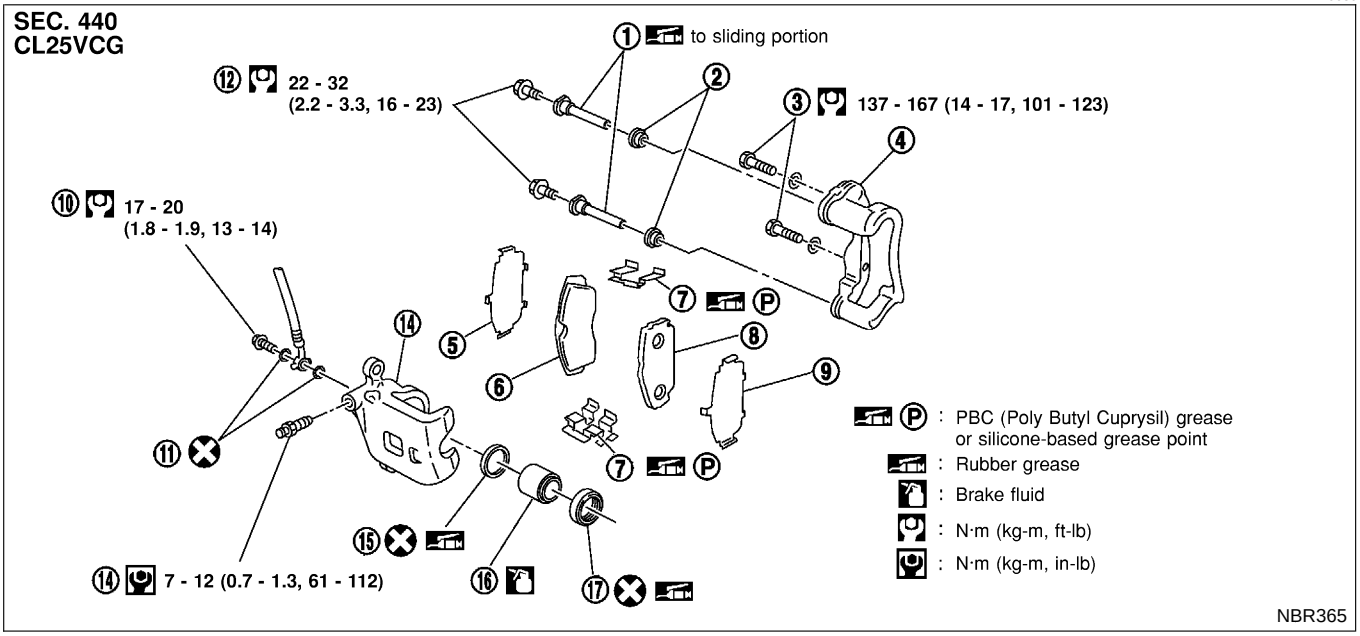

1. Main pin
2. Pin boot
3. Torque member fixing bolt
4. Torque member
5. Inner shim
6. Inner pad
7. Pad retainer
8. Outer pad
9. Outer shim
10. Connecting bolt
11. Copper washer
12. Main pin bolt
13. Bleed valve
14. Cylinder body
15. Piston seal
16. Piston
17. Piston boot

Pad Replacement

NLBR0029

WARNING:

Clean brake pads with a vacuum dust collector to minimize the hazard of airborne particles or other materials.

CAUTION:

- **When cylinder body is open, do not depress brake pedal because piston will pop out.**
- **Be careful not to damage piston boot or get oil on rotor. Always replace shims when replacing pads.**
- **If shims are rusted or show peeling of the rubber coat, replace them with new shims.**
- **It is not necessary to remove connecting bolt except for disassembly or replacement of caliper assembly. In this case, suspend cylinder body with wire so as not to stretch brake hose.**
- **Burnish the brake contact surfaces after refinishing or replacing rotors, after replacing pads, or if a soft pedal occurs at very low mileage.**
  Refer to "Brake Burnishing Procedure", "ON-VEHICLE SERVICE", BR-10.

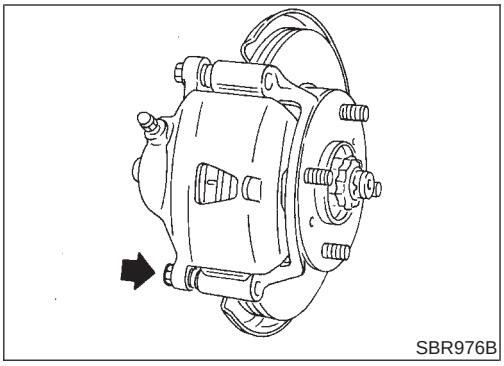
SBR976B

1. Remove master cylinder reservoir cap.
2. Remove pin bolt.
3. Open cylinder body upward. Then remove pad with retainers, inner and outer shims.

   Standard pad thickness:
   11 mm (0.43 in)
   Pad wear limit:
   2.0 mm (0.079 in)

   Carefully monitor brake fluid level because brake fluid will return to reservoir when pushing back piston.

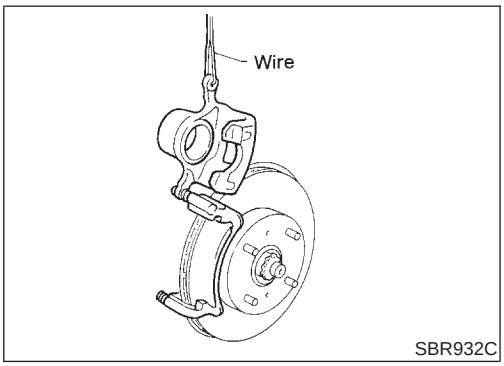

SBR932C

Removal

NLBR0031

WARNING:
Clean brake pads with a vacuum dust collector to minimize the hazard of airborne particles or other materials.

Remove torque member fixing bolts and connecting bolt.
It is not necessary to remove connecting bolt except for disassembly or replacement of caliper assembly. In this case, suspend caliper assembly with wire so as not to stretch brake hose.

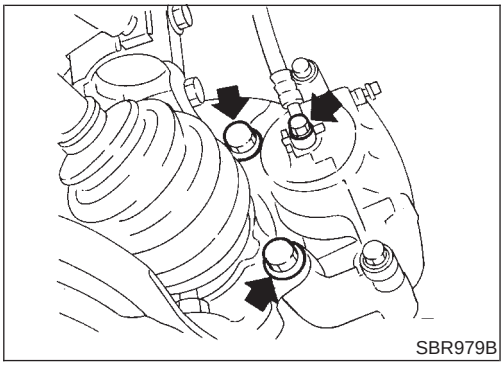
SBR979B

Disassembly

NLBR0032

WARNING:
Do not place your fingers in front of piston.

CAUTION:
Do not scratch or score cylinder wall.

1. Push out piston with piston boot with compressed air.
2. Remove piston seal with a suitable tool.

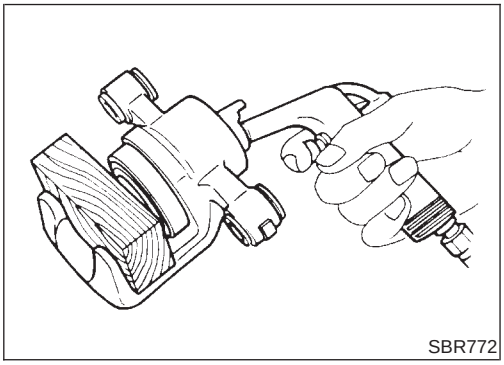
SBR772

Inspection

NLBR0033

CALIPER

NLBR0033S01

Cylinder Body

NLBR0033S0101

- Check inside surface of cylinder for score, rust, wear, damage or presence of foreign materials. If any of the above conditions are observed, replace cylinder body.
- Minor damage from rust or foreign materials may be eliminated by polishing surface with a fine emery paper. Replace cylinder body if necessary.

CAUTION:
Use brake fluid to clean. Never use mineral oil.

Piston

NLBR0033S0102

CAUTION:
Piston sliding surface is plated. Do not polish with emery paper even if rust or foreign materials are stuck to sliding surface.

Check piston for score, rust, wear, damage or presence of foreign materials. Replace if any of the above conditions are observed.

Slide Pin, Pin Bolt and Pin Boot

NLBR0033S0103

Check for wear, cracks or other damage. Replace if any of the above conditions are observed.

ROTOR

NLBR0033S02

Rubbing Surface

NLBR0033S0201

Check rotor for roughness, cracks or chips.

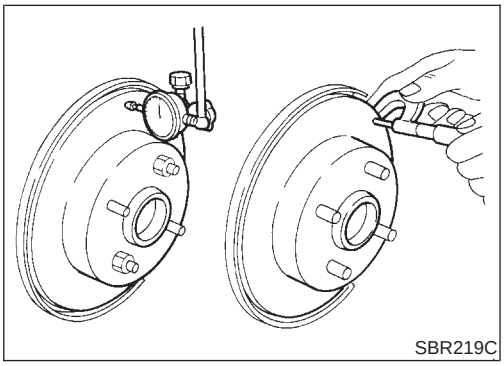
SBR219C

Runout

NLBR0033S0202

1. Secure rotor to wheel hub with at least two nuts (M12 x 1.25).
2. Check runout using a dial indicator.
   Make sure that wheel bearing axial end play is within the specifications before measuring. Refer to AX section ("Front Wheel Bearing", "ON-VEHICLE SERVICE").
   Maximum runout:
   0.08 mm (0.0031 in)
3. If the runout is out of specification, find minimum runout position as follows:

a. Remove nuts and rotor from wheel hub.
b. Shift the rotor one hole and secure rotor to wheel hub with nuts.
c. Measure runout.
d. Repeat steps a. to c. so that minimum runout position can be found.

4. If the runout is still out of specification, turn rotor with on-car brake lathe ("MAD, DL-8700", "AMMCO 700 and 705" or equivalent).

Thickness

NLBR0033S0203

Thickness variation (At least 8 positions):
Maximum 0.02 mm (0.0008 in)

If thickness variation exceeds the specification, turn rotor with on-car brake lathe.

Rotor repair limit:
26.0 mm (1.024 in)

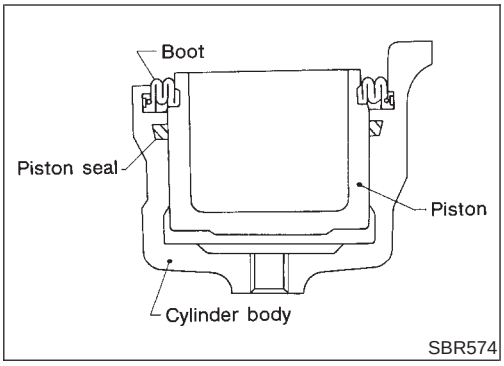

Assembly

NLBR0034

1. Insert piston seal into groove on cylinder body.
2. With piston boot fitted to piston, insert piston boot into groove on cylinder body and install piston.
3. Properly secure piston boot.

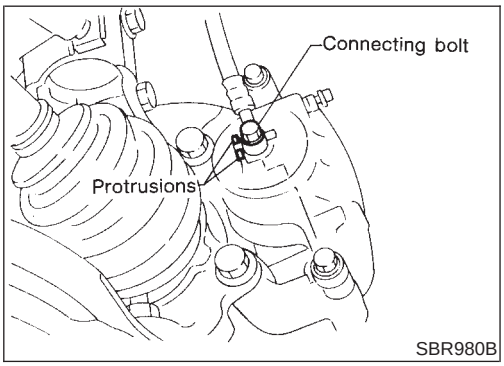

Installation

NLBR0035

CAUTION:

- **Refill with new brake fluid “DOT 3” or “DOT 4”.**
- **Never reuse drained brake fluid.**

1. Install brake hose to caliper securely.
2. Install all parts and secure all bolts.
3. Bleed air. Refer to “Bleeding Brake System”, BR-11.

Component

NLBR0038

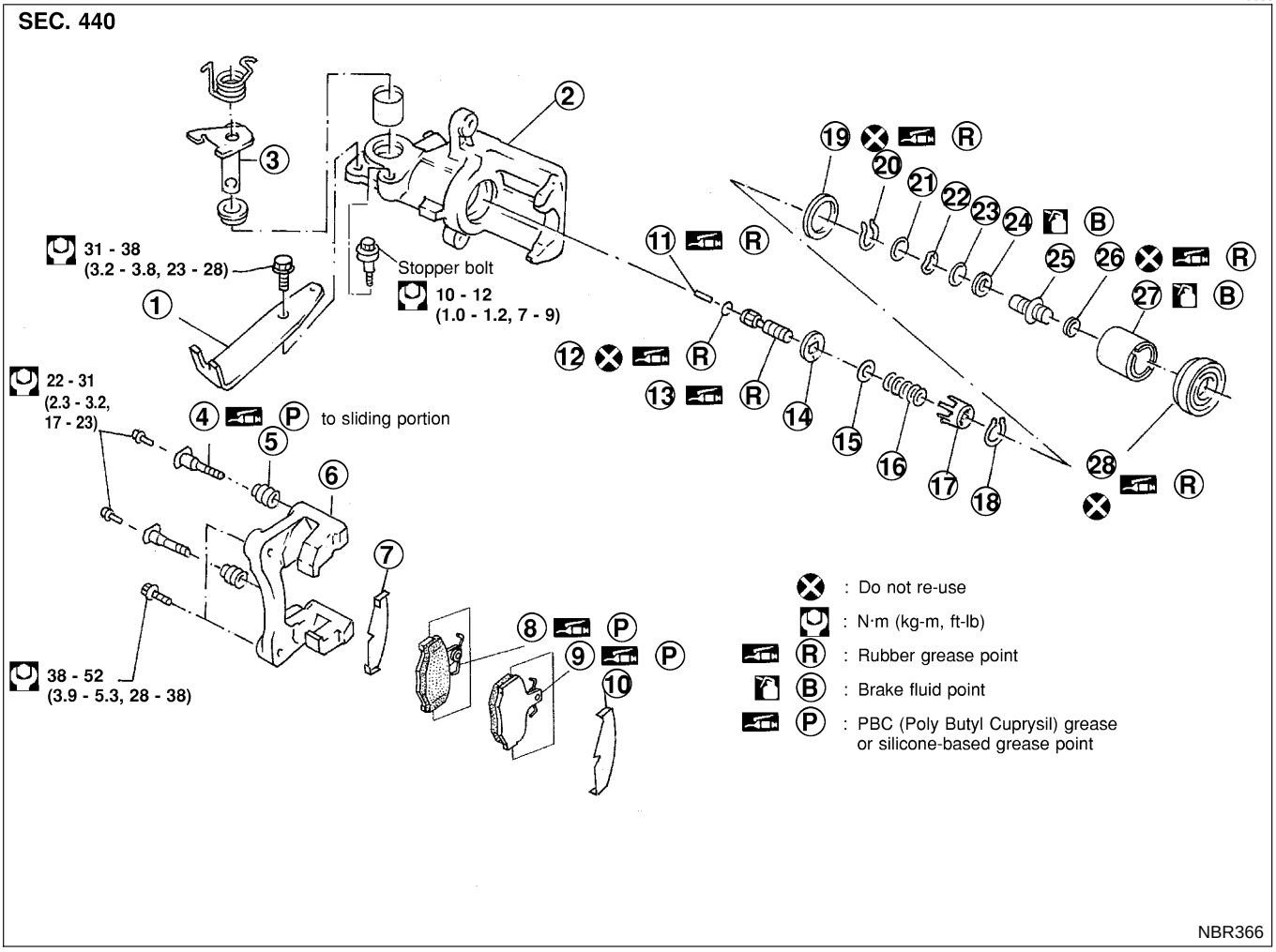

1. Cable guide
2. Cylinder
3. Toggle lever
4. Pin
5. Pin boot
6. Torque member
7. Inner shim
8. Inner pad
9. Outer pad
10. Outer shim
11. Strut
12. O-ring
13. Push rod
14. Key plate
15. Retaining washer
16. Spring
17. Spring cover
18. Snap ring B
19. Piston seal
20. Snap ring A
21. Washer
22. Wave washer
23. Washer
24. Bearing
25. Adjuster
26. Cup
27. Piston
28. Piston boot
29. Sleeve

Pad Replacement

NLBR0037

WARNING:

Clean brake pads with a vacuum dust collector to minimize the hazard of airborne particles or other materials.

CAUTION:

- **When cylinder body is open, do not depress brake pedal because piston will pop out.**
- **Be careful not to damage piston boot or get oil on rotor. Always replace shims in replacing pads.**
- **If shims are rusted or show peeling of rubber coat, replace them with new shims.**

- **It is not necessary to remove connecting bolt except for disassembly or replacement of caliper assembly. In this case, suspend cylinder body with wire so as not to stretch brake hose.**
- **Burnish the brake contact surfaces after refinishing or replacing rotors, after replacing pads, or if a soft pedal occurs at very low mileage.**
  Refer to "Brake Burnishing Procedure", "ON-VEHICLE SERVICE", BR-10.

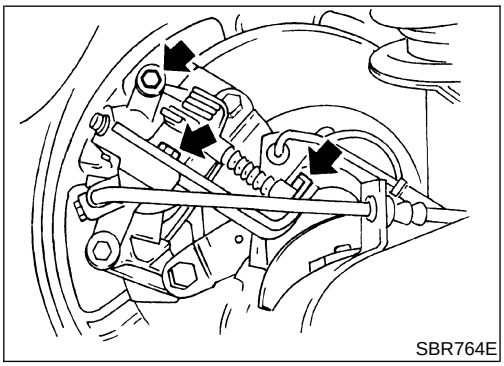
SBR764E

1. Remove master cylinder reservoir cap.
2. Remove brake cable mounting bolt and lock spring.
3. Release parking brake control lever, then disconnect cable from the caliper.
4. Remove upper pin bolt.
5. Open cylinder body downward. Then remove pads inner and outer shims.

   Standard pad thickness:
   9.3 mm (0.366 in)
   Pad wear limit:
   2.0 mm (0.079 in)

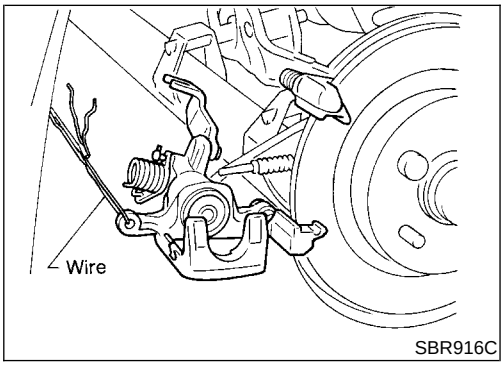

SBR916C

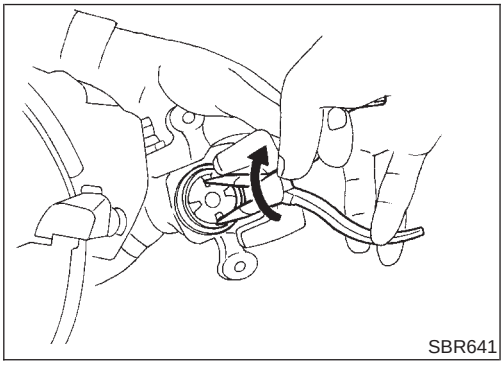
SBR641

6. When installing new pads, push piston into cylinder body by gently turning piston clockwise, as shown.
   Carefully monitor brake fluid level because brake fluid will return to reservoir when pushing back piston.

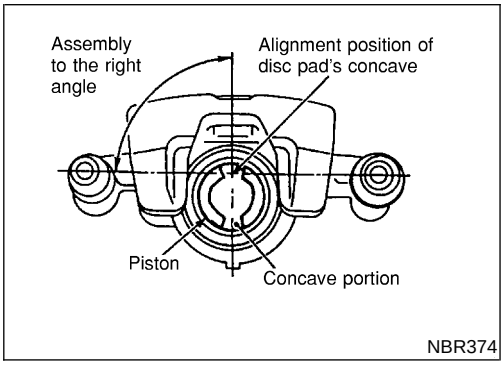

NBR374

7. Adjust the piston to the right angle as shown in the figure.

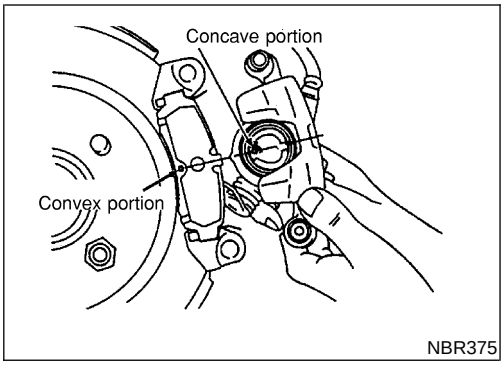

NBR375

8. As shown in the figure, align the piston's concave to the pad's convex, then install the cylinder body to the torque member.
9. Install brake cable, brake cable mounting bolt, lock spring and master cylinder reservoir cap.

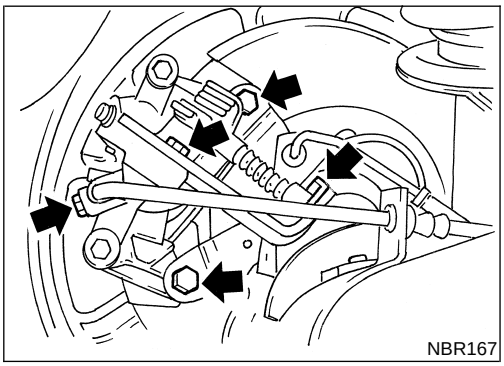
NBR167

Removal

NLBR0039

WARNING:

Clean brake pads with a vacuum dust collector to minimize the hazard of airborne particles or other materials.

1. Remove brake cable mounting bolt and lock spring.
2. Release parking brake control lever, then disconnect cable from the caliper.
3. Remove torque member fixing bolts and connecting bolt.

It is not necessary to remove connecting bolt except for disassembly or replacement of caliper assembly. In this case, suspend caliper assembly with wire so as not to stretch brake hose.

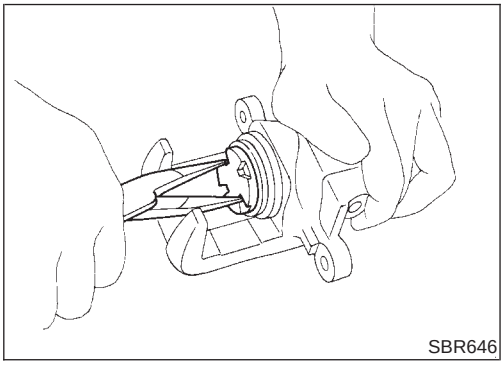
SBR646

Disassembly

NLBR0040

1. Remove piston by turning it counterclockwise with long nose pliers or suitable tool.

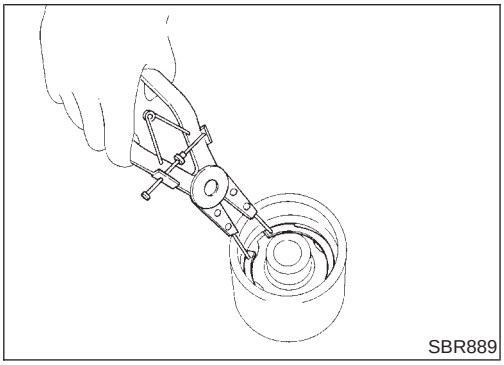
SBR889

2. Pry off snap ring A from piston with suitable pliers and remove adjusting nut.

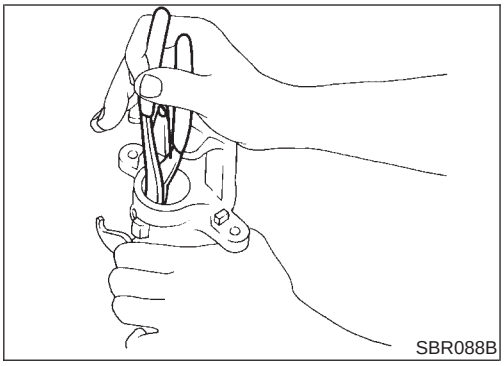

3. Disassemble cylinder body.
a. Pry off snap ring B with suitable pliers, then remove spring cover, spring and seat.
b. Remove washer, key plate, push rod, O-ring and strut.

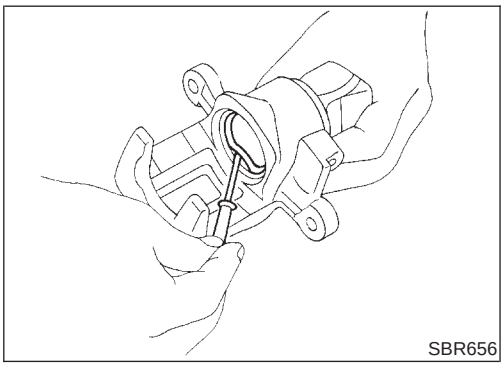

c. Remove piston seal.
Be careful not to damage cylinder body.

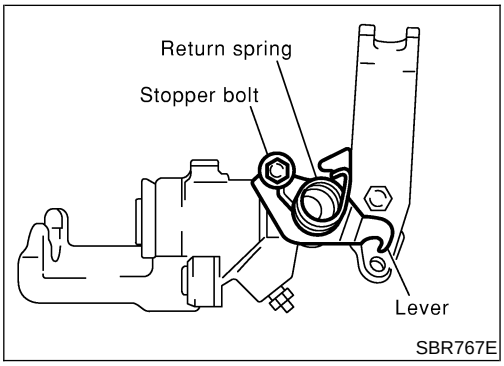

4. Remove return spring, toggle lever and cable guide.

Inspection

NLBR0041

CALIPER

NLBR0041S01

CAUTION:
Use brake fluid to clean cylinder. Never use mineral oil.

Cylinder Body

NLBR0041S0101

- Check inside surface of cylinder for score, rust, wear, damage or presence of foreign materials. If any of the above conditions are observed, replace cylinder body.
- Minor damage from rust or foreign materials may be eliminated by polishing surface with a fine emery paper.
  Replace cylinder body if necessary.

Torque Member

NLBR0041S0102

Check for wear, cracks or other damage. Replace if necessary.

Piston

NLBR0041S0103

CAUTION:
Piston sliding surface is plated. Do not polish with emery paper even if rust or foreign matter is stuck to sliding surface.

Check piston for score, rust, wear, damage or presence of foreign materials.
Replace if any of the above conditions are observed.

Pin and Pin Boot

NLBR0041S0104

Check for wear, cracks or other damage.
Replace if any of the above conditions are observed.

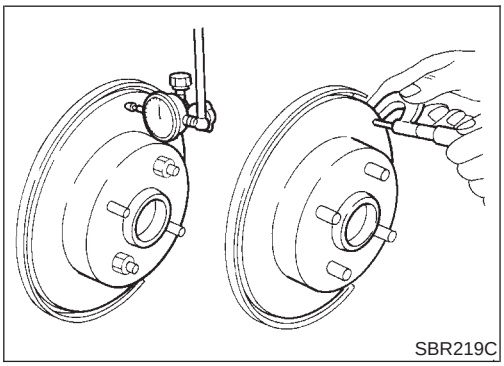

ROTOR

NLBR0041S02

Rubbing Surface

NLBR0041S0201

Check rotor for roughness, cracks or chips.

Runout

NLBR0041S0202

1. Secure rotor to wheel hub with two nuts (M12 x 1.25).
2. Check runout using a dial indicator.

Make sure that axial end play is within the specifications before measuring. Refer to AX section ("REAR WHEEL BEARING", "On-vehicle Service").

3. Change relative positions of rotor and wheel hub so that runout is minimized.

Maximum runout:
0.07 mm (0.0028 in)

Thickness

NLBR0041S0203

Rotor repair limit:
Standard thickness
10 mm (0.39 in)
Minimum thickness
9 mm (0.35 in)
Thickness variation (At least 8 portions)
Maximum 0.02 mm (0.0008 in)

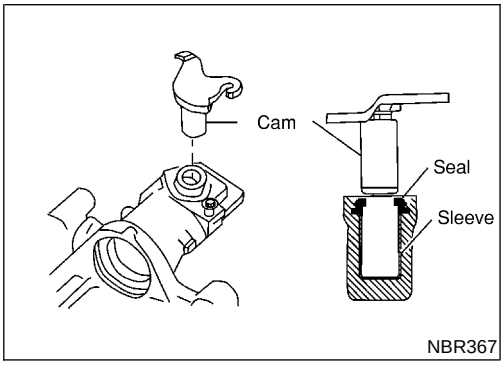

Assembly

NLBR0042

1. Insert cam with depression facing towards open end of cylinder.

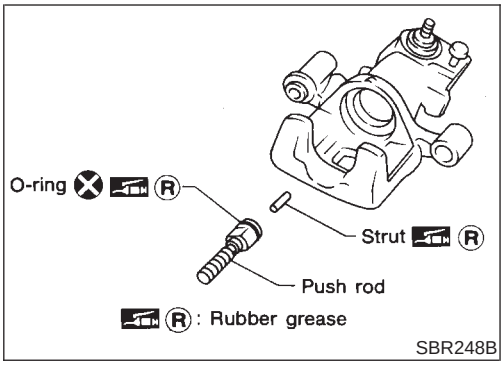

2. Generously apply rubber grease to strut and push rod to make insertion easy.

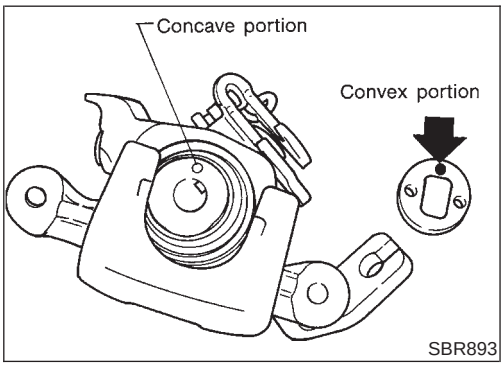

3. Fit push rod into square hole in key plate. Also match convex portion of key plate with concave portion of cylinder.

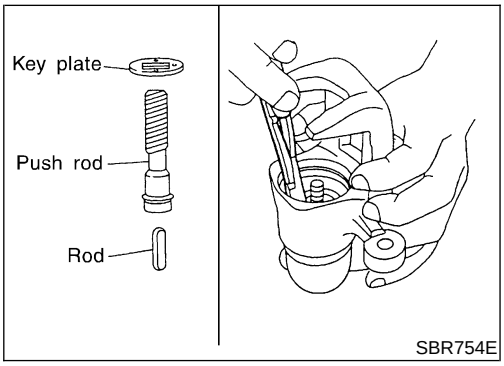

4. Install rod, push rod and key plate.

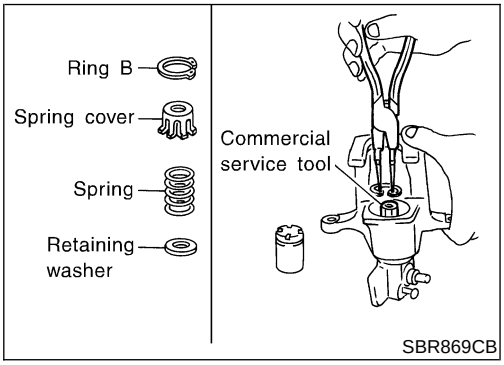

5. Install seat, spring, spring cover and snap ring B with suitable press and drift.

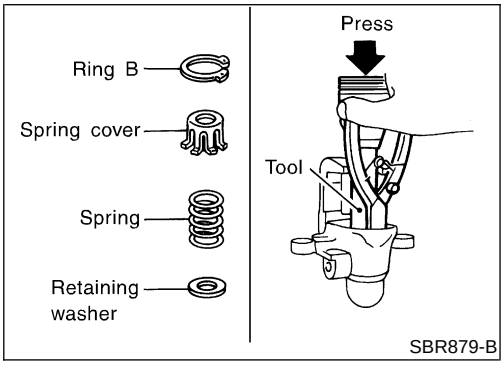

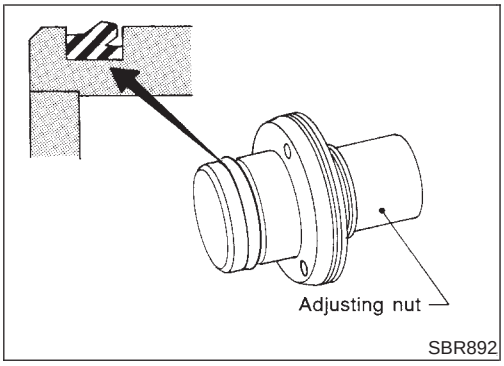

6. Install cup in the specified direction.

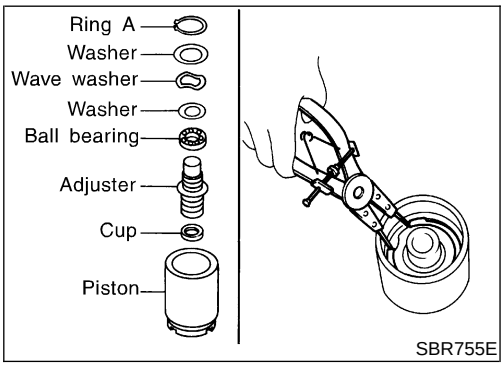

7. Install adjuster, bearing, washers and snap ring A with a suitable tool.

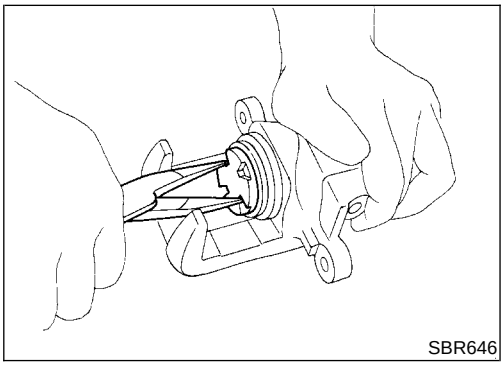

8. Insert piston seal into groove on cylinder body.
9. With piston boot fitted to piston, insert piston boot into groove on cylinder body and fit piston by turning it clockwise with long nose pliers, or suitable tool.

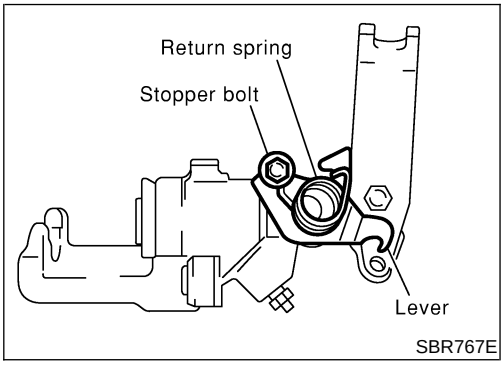

10. Fit toggle lever, return spring and cable guide.

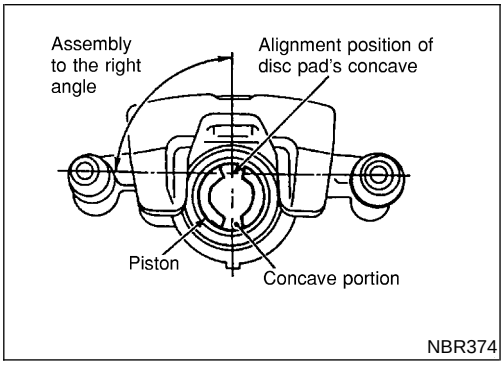

11. Adjust the piston to the right angle as shown in the figure.

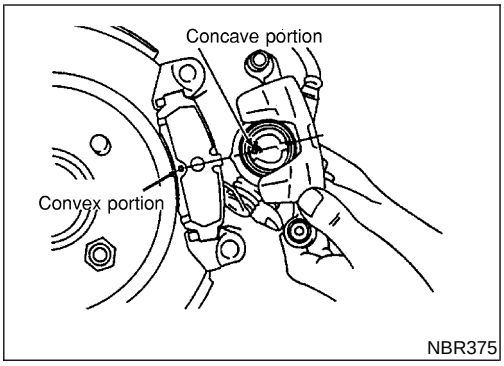

Installation

NLBR0043

CAUTION:

- **Refill with new brake fluid “DOT 3” or “DOT 4”.**
- **Never reuse drained brake fluid.**

1. Install caliper assembly.
   - As shown in the figure, align the piston’s concave to the pad’s convex, then install the cylinder body to the torque member.
2. Install brake hose to caliper securely.
3. Install all parts and secure all bolts.
4. Bleed air. Refer to “Bleeding Brake System”, BR-11 and “Air Bleeding Procedure”, CL-10.

Component

NLBR0150

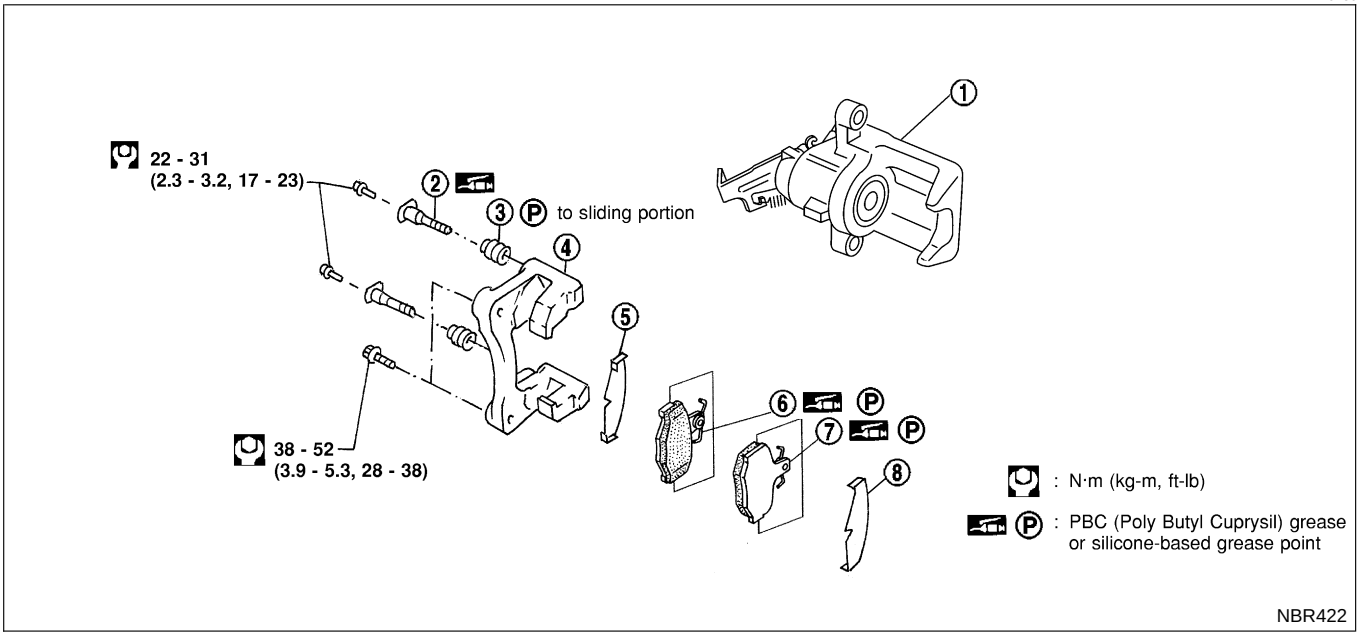

1. Cylinder body
2. Pin
3. Pin boot
4. Torque member
5. Inner shim
6. Inner pad
7. Outer pad
8. Outer shim

NOTE:
The cylinder body cannot be disassembled.

Pad Replacement

NLBR0151

WARNING:
Clean brake pads with a vacuum dust collector to minimize the hazard of airborne particles or other materials.

CAUTION:

- **When cylinder body is open, do not depress brake pedal because piston will pop out.**
- **Be careful not to damage piston boot or get oil on rotor. Always replace shims in replacing pads.**
- **If shims are rusted or show peeling of rubber coat, replace them with new shims.**
- **It is not necessary to remove connecting bolt except for replacement of caliper assembly. In this case, suspend cylinder body with wire so as not to stretch brake hose.**
- **Burnish the brake contact surfaces after refinishing or replacing rotors, after replacing pads, or if a soft pedal occurs at very low mileage.**
  Refer to "Brake Burnishing Procedure", "ON-VEHICLE SERVICE", BR-10.

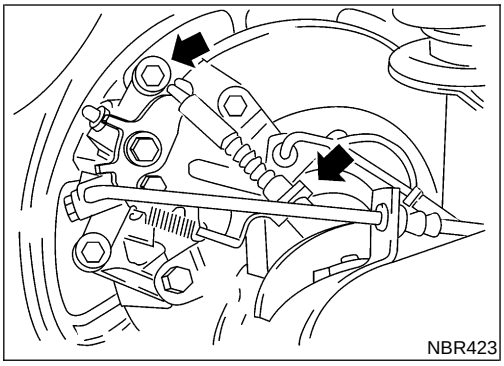

1. Remove master cylinder reservoir cap.
2. Remove brake cable lock spring.
3. Release parking brake control lever, then disconnect cable from the caliper.
4. Remove upper pin bolt.

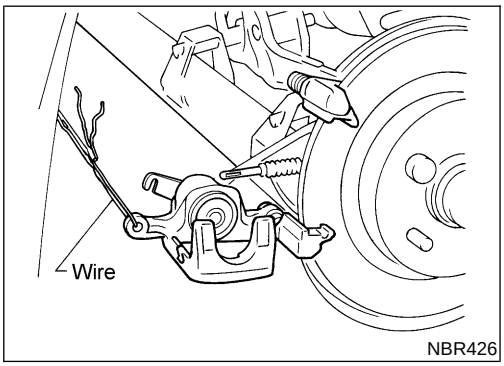

5. Open cylinder body downward. Then remove pads inner and outer shims.

   Standard pad thickness:
   9.3 mm (0.366 in)
   Pad wear limit:
   2.0 mm (0.079 in)

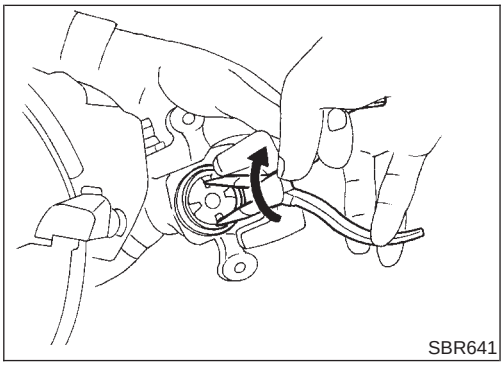

6. When installing new pads, push piston into cylinder body by gently turning piston clockwise, as shown.
   Carefully monitor brake fluid level because brake fluid will return to reservoir when pushing back piston.

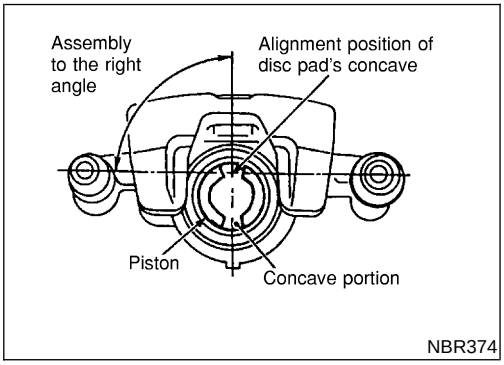

7. Adjust the piston to the right angle as shown in the figure.

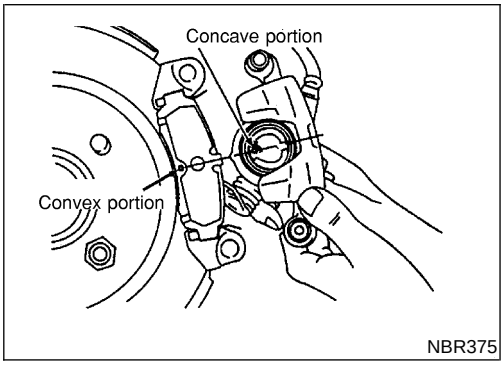

8. As shown in the figure, align the piston's concave to the pad's convex, then install the cylinder body to the torque member.
9. Install brake cable, brake cable mounting bolt, lock spring and master cylinder reservoir cap.

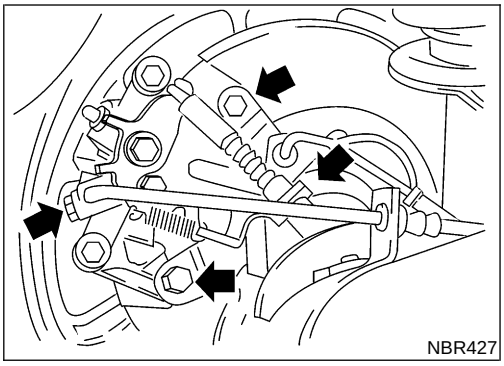

Removal

NLBR0152

WARNING:

Clean brake pads with a vacuum dust collector to minimize the hazard of airborne particles or other materials.

1. Remove brake cable lock spring.
2. Release parking brake control lever, then disconnect cable from the caliper.
3. Remove torque member fixing bolts and connecting bolt.
4. Remove brake hose connecting bolt.
5. Plug off the brake hose and cylinder body to prevent air entering the system.

CAUTION:

Care should be taken as not to let:

- **Air enter the cylinder body and brake hose.**
- **Brake fluid spill from the cylinder body and brake hose.**

Disassembly

NLBR0153

Remove pin bolts and pins.

NOTE:

Cylinder body cannot be disassembled.

Inspection

NLBR0154

CALIPER

NLBR0154S01

CAUTION:

Do not drain any brake fluid from cylinder body. Cylinder body can not be disassembled.

Cylinder Body

NLBR0154S0101

Check cylinder body for score, rust, wear, damage or presence of foreign materials. If any of the above conditions are observed, replace cylinder body.

Torque Member

NLBR0154S0102

Check for wear, cracks or other damage. Replace if necessary.

Pin and Pin Boot

NLBR0154S0104

Check for wear, cracks or other damage.
Replace if any of the above conditions are observed.

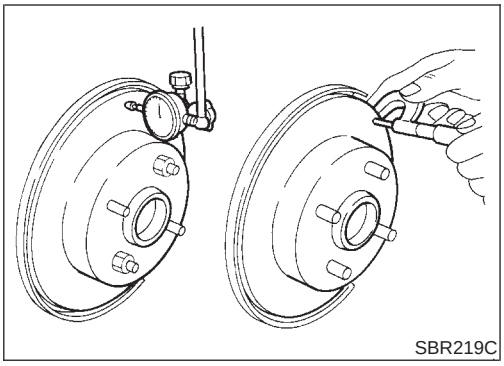
SBR219C

ROTOR

NLBR0154S02

Rubbing Surface

NLBR0154S0201

Check rotor for roughness, cracks or chips.

Runout

NLBR0154S0202

1. Secure rotor to wheel hub with two nuts (M12 x 1.25).
2. Check runout using a dial indicator.

Make sure that axial end play is within the specifications before measuring. Refer to AX section ("REAR WHEEL BEARING", "On-vehicle Service").

3. Change relative positions of rotor and wheel hub so that runout is minimized.

Maximum runout:
0.07 mm (0.0028 in)

Thickness

NLBR0154S0203

Rotor repair limit:
Standard thickness
10 mm (0.39 in)
Minimum thickness
9 mm (0.35 in)
Thickness variation (At least 8 portions)
Maximum 0.02 mm (0.0008 in)

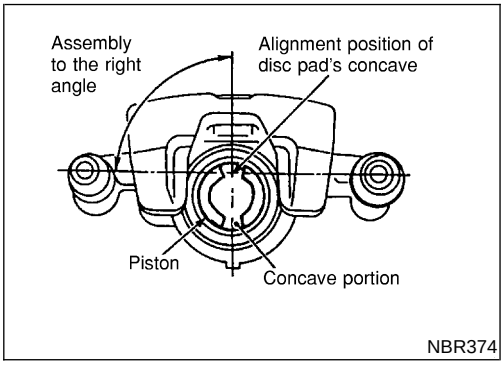

NBR374

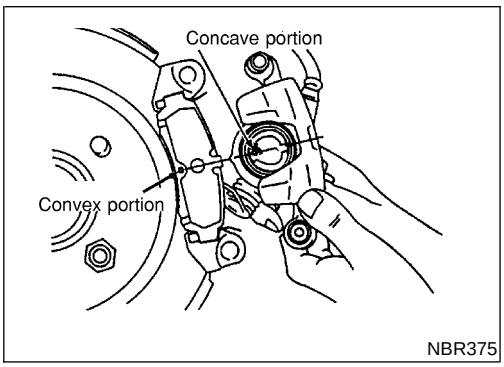

NBR375

Installation

NLBR0156

CAUTION:

- **Refill with new brake fluid "DOT 3" or "DOT 4".**
- **Never reuse drained brake fluid.**
- **Do not drain (factory) filled brake fluid from (new) caliper assemblies.**

1. Install caliper assembly.
- As shown in the figure, align the piston's concave to the pad's convex, then install the cylinder body to the torque member.
2. Remove the plug from the cylinder body and brake hose.

CAUTION:

Care should be taken as not to let:

- **Air enter the cylinder body and brake hose.**
- **Brake fluid spill from the cylinder body and brake hose.**

3. Install brake hose to caliper securely.
4. Install all parts and secure all bolts.
5. Bleed air. Refer to "Bleeding Brake System", BR-11 and "Air Bleeding Procedure", CL-10.

Components

NLBR0044

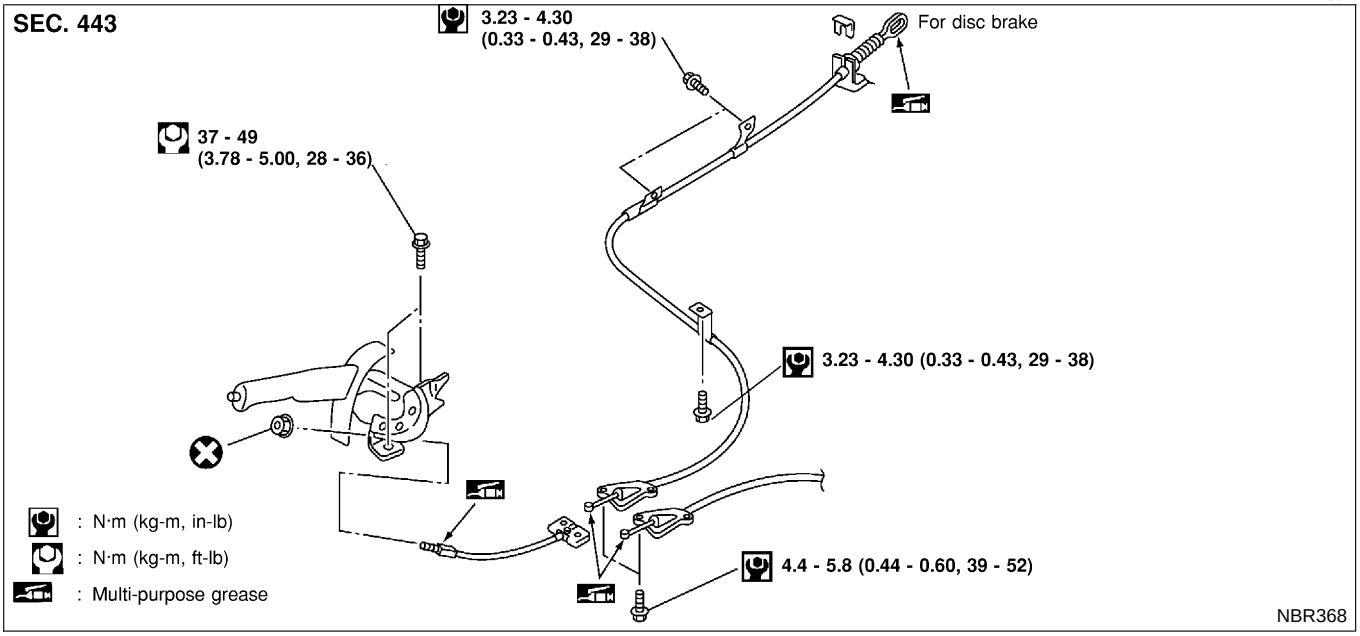

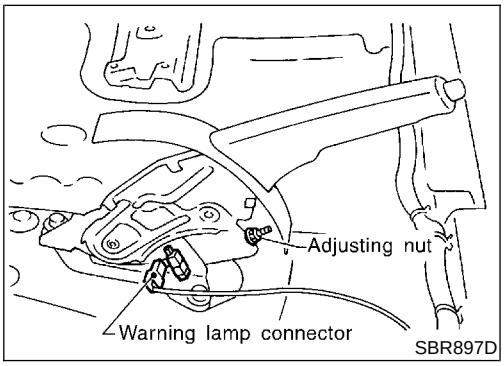

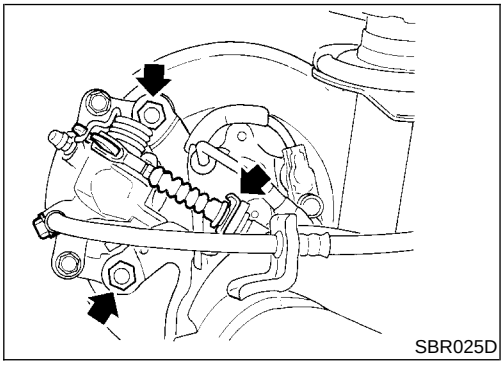

Removal and Installation

NLBR0045

1. To remove parking brake cable, first remove center console.
2. Disconnect warning lamp switch connector.
3. Remove adjusting nut.
4. Remove bolts and nuts securing parking brake cable.
5. Remove parking brake device.
6. Remove lock plate and disconnect cable.

Inspection

NLBR0046

1. Check control lever for wear or other damage. Replace if necessary.
2. Check wires for discontinuity or deterioration. Replace if necessary.
3. Check warning lamp and switch. Replace if necessary.
4. Check parts at each connecting portion and, if found deformed or damaged, replace.

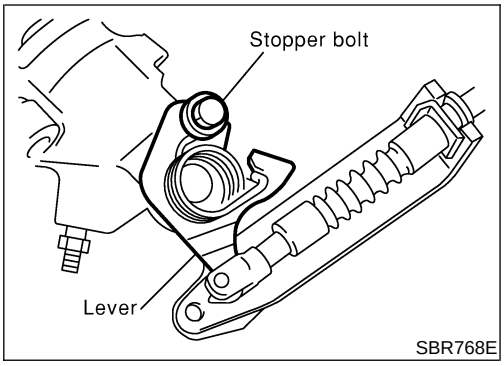

Adjustment

NLBR0047

Before or after adjustment, pay attention to the following points.

- For rear disc brake be sure that toggle lever returns to stopper when parking brake lever is released.
- There is no drag when parking brake lever is released.
- Vehicle is unladen.

1. Adjust clearance between pad and rotor as follows:

a. Release parking brake lever and loosen adjusting nut.

b. Depress brake pedal fully at least 10 times with engine running.

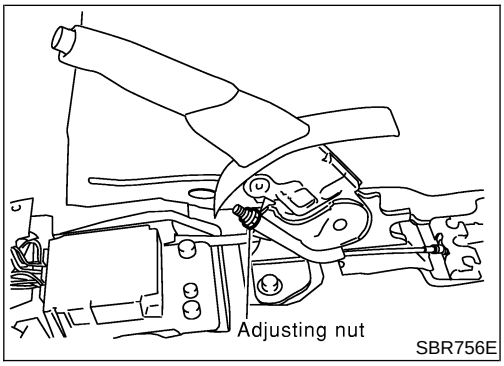

2. Pull control lever 10 times or more to make a lever stroke of 195 mm (7.68 in). At 5 - 6 notches, adjust the parking brake cable by turning the adjusting nut.

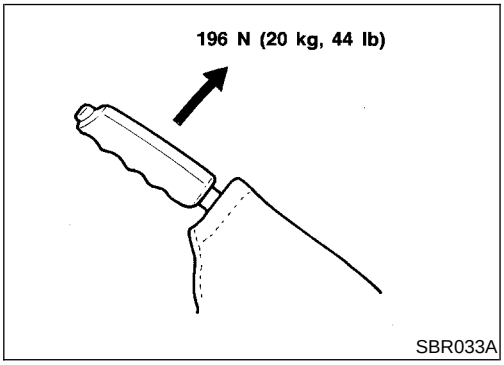

3. Pull control lever with specified amount of force. Check lever stroke and ensure smooth operation.

Number of notches

5 - 6

4. Bend warning lamp switch plate to ensure:

- Warning lamp comes on when lever is lifted “A” notches.
- Warning lamp goes out when lever is fully released.

Number of “A” notches: 1

Purpose

NLBR0082

The ABS consists of electronic and hydraulic components. It allows to control the braking force so that locking of the wheels can be avoided.
The ABS:

1) Ensures proper tracking performance through steering wheel operation.
2) Enables obstacles to be avoided through steering wheel operation.
3) Ensures vehicle stability by preventing flat spins.

ABS (Anti-Lock Brake System) Operation

NLBR0083

- When the vehicle speed is less than 10 km/h (6 MPH) this system does not work.
- The Anti-Lock Brake System (ABS) has self-test capabilities. The system turns on the ABS warning lamp for 1 second after turning the ignition switch ON. The system performs another test the first time the vehicle reaches 6 km/h (4 MPH). A mechanical noise may be heard as the ABS performs a self-test. This is a normal part of the self-test feature. If a malfunction is found during this check, the ABS warning lamp will come on.
- During ABS operation, a mechanical noise may be heard. This is a normal condition.

ABS Hydraulic Circuit

NLBR0084

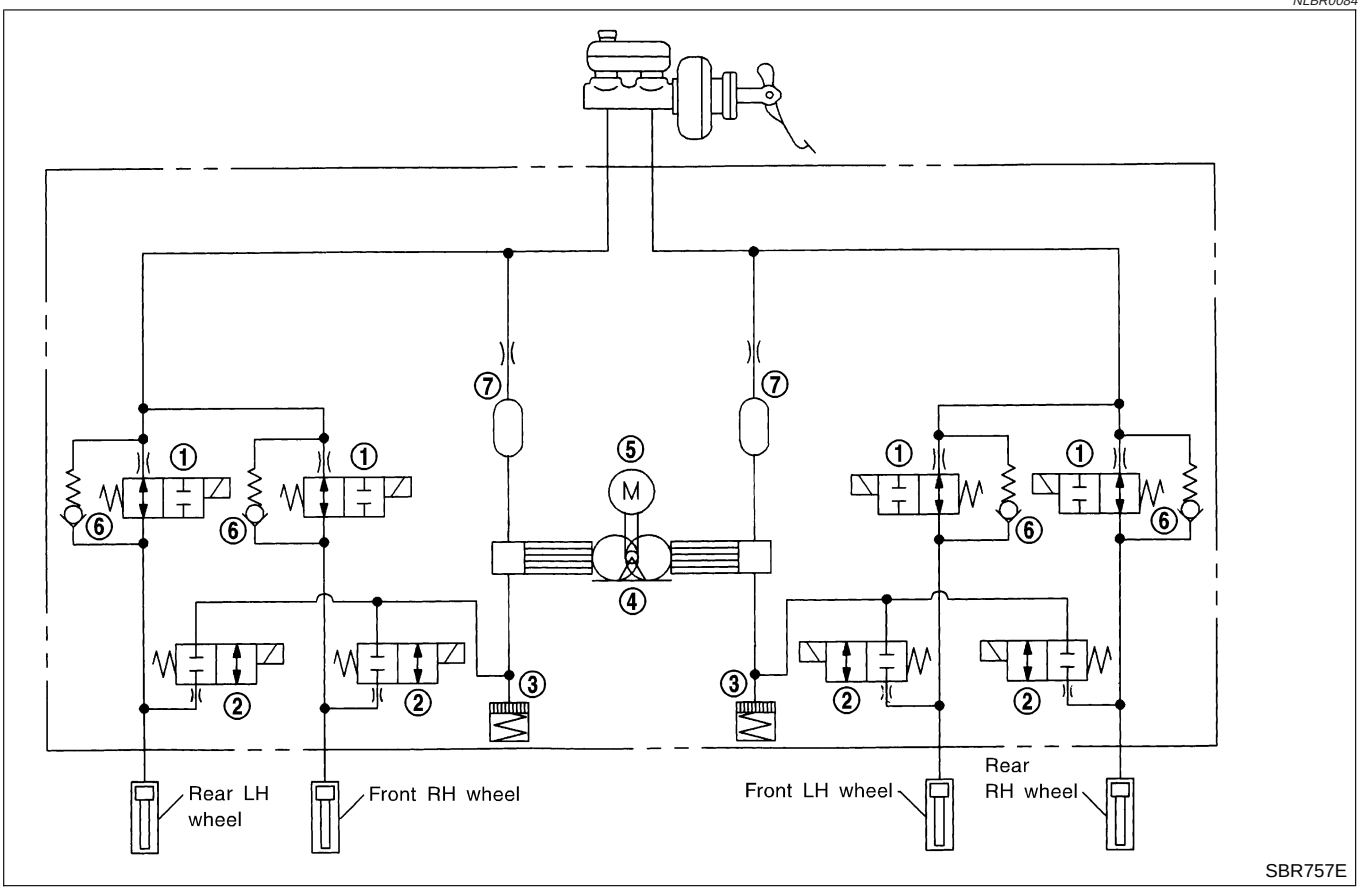

1. Inlet solenoid valve
2. Outlet solenoid valve
3. Reservoir
4. Pump
5. Motor
6. Bypass check valve
7. Damper

System Components

NLBR0086

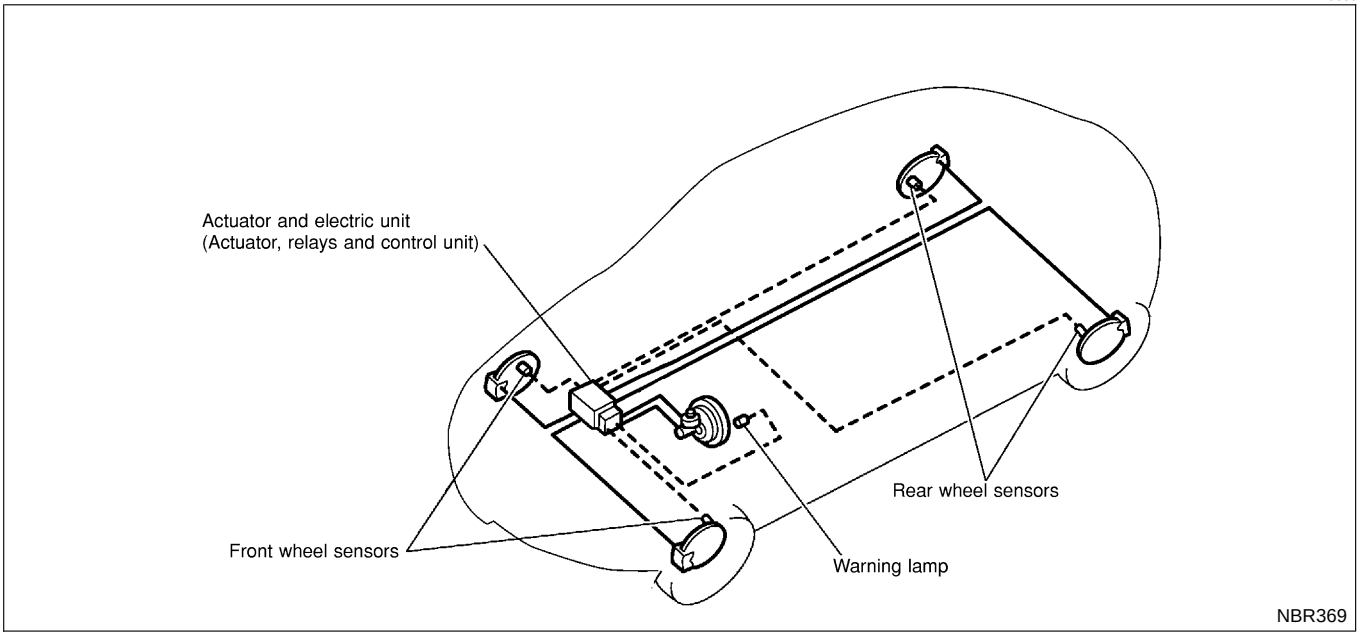

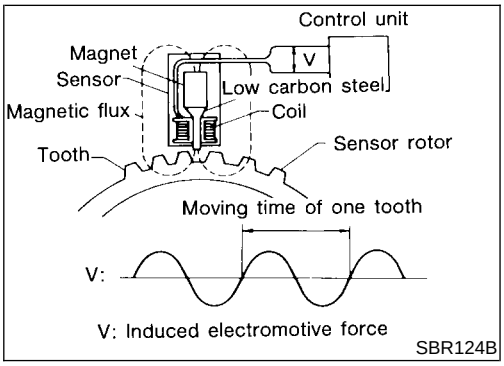

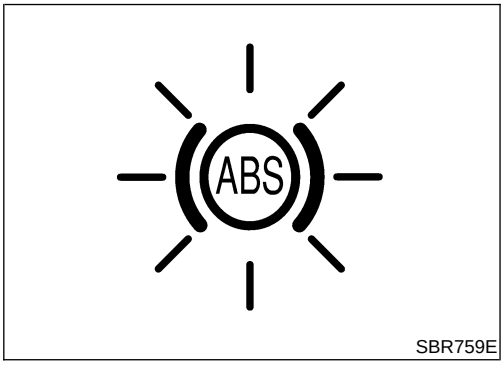

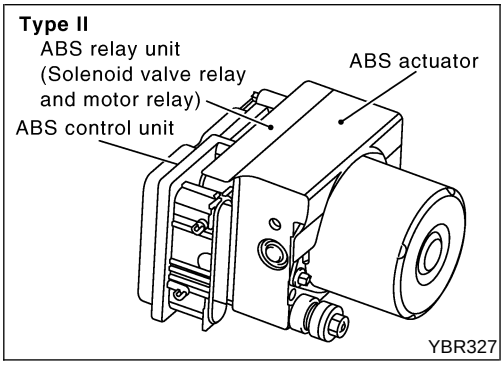

System Description

NLBR0087

SENSOR

NLBR0087S01

The sensor unit consists of a gear-shaped sensor rotor and a sensor element. The element contains a bar magnet around which a coil is wound. The sensor is installed on the back side of the brake rotor. Sine-wave current is generated by the sensor as the wheel rotates. The frequency and voltage increase(s) as the rotating speed increases.

CONTROL UNIT

NLBR0087S02

The control unit computes the wheel rotating speed by the signal current sent from the sensor. Then it supplies a DC current to the actuator solenoid valve. It also controls ON-OFF operation of the valve relay and motor relay. If any electrical malfunction should be detected in the system, the control unit causes the warning lamp to light up. In this condition, the ABS will be deactivated by the control unit, and the vehicle's brake system reverts to normal operation.

ABS ACTUATOR AND ELECTRIC UNIT

NLBR0087S03

The ABS actuator and electric unit contains:

- An electric motor and pump
- Two relays
- Eight solenoid valves, each inlet and outlet for
  — LH front
  — RH front
  — LH rear
  — RH rear
- ABS control unit

This components controls the hydraulic circuit and increases, holds or decreases hydraulic pressure to all or individual wheels. The ABS actuator and electric unit can not be disassemble and will be service as an assembly.

ABS Actuator Operation

NLBR0087S0301

		Inlet solenoid valve	Outlet solenoid valve	
Normal brake operation		OFF (Open)	OFF (Closed)	Master cylinder brake fluid pressure is directly transmitted to caliper via the inlet solenoid valve.
ABS operation	Pressure hold	ON (Closed)	OFF (Closed)	Hydraulic circuit is shut off to hold the caliper brake fluid pressure.
	Pressure decrease	ON (Closed)	ON (Open)	Caliper brake fluid is sent to reservoir via the outlet solenoid valve. Then it is pushed up to the master cylinder by pump.
	Pressure increase	OFF (Open)	OFF (Closed)	Master cylinder brake fluid pressure is transmitted to caliper.

Component Parts and Harness Connector Location

NLBR0088

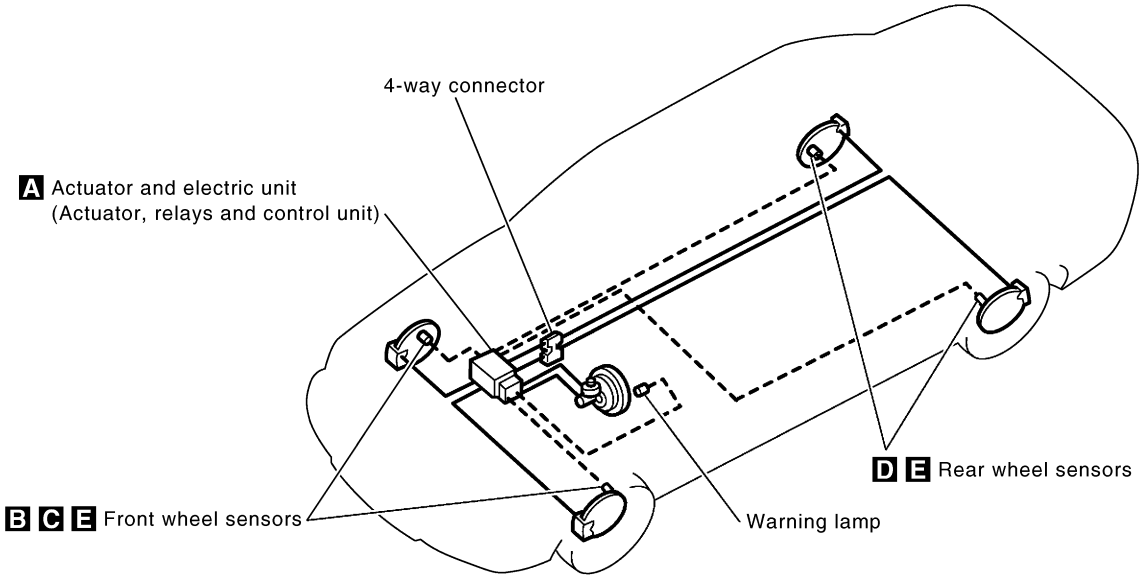

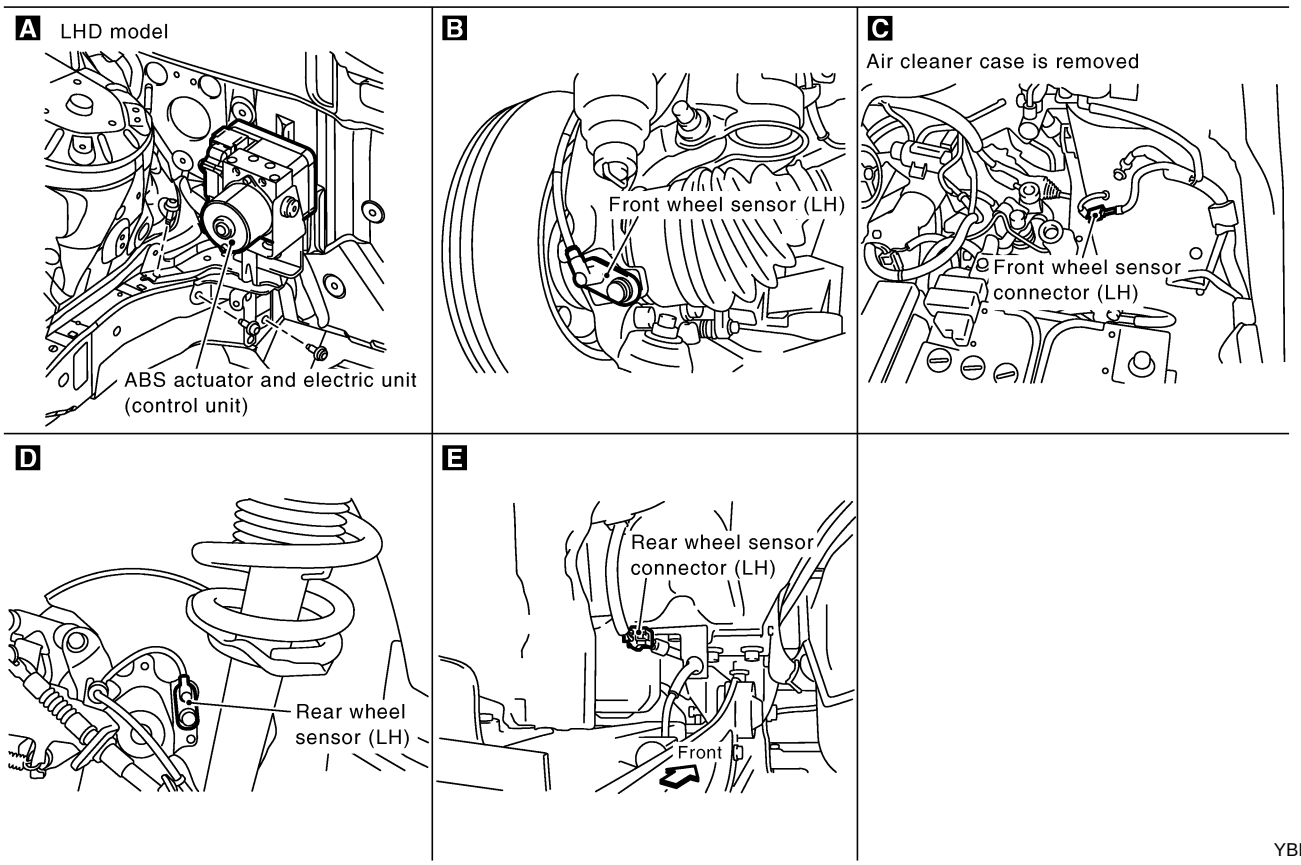

YBR366

Schematic

NLBR0089

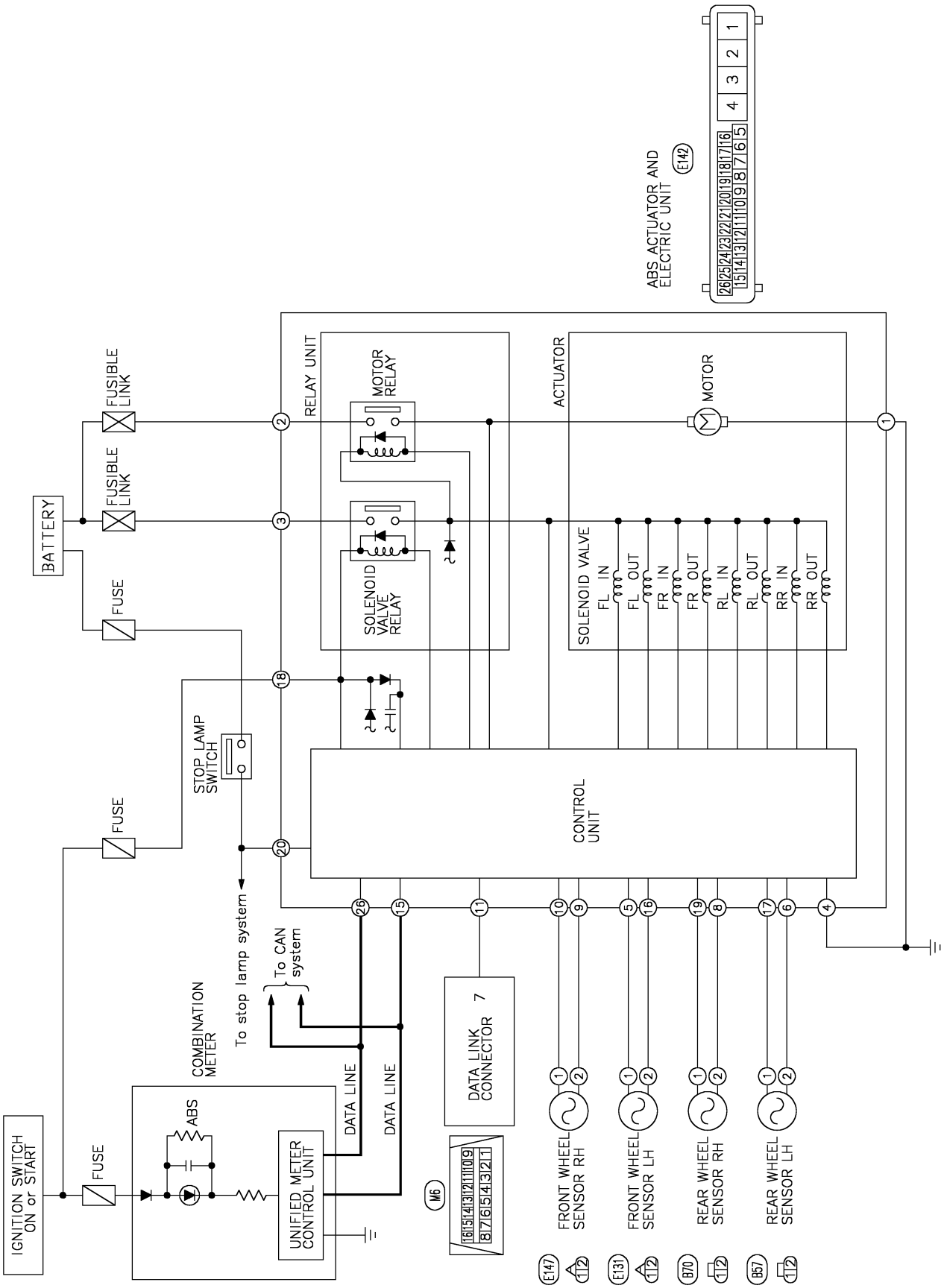

YBR327A

Wiring Diagram — ABS —

NLBR0090

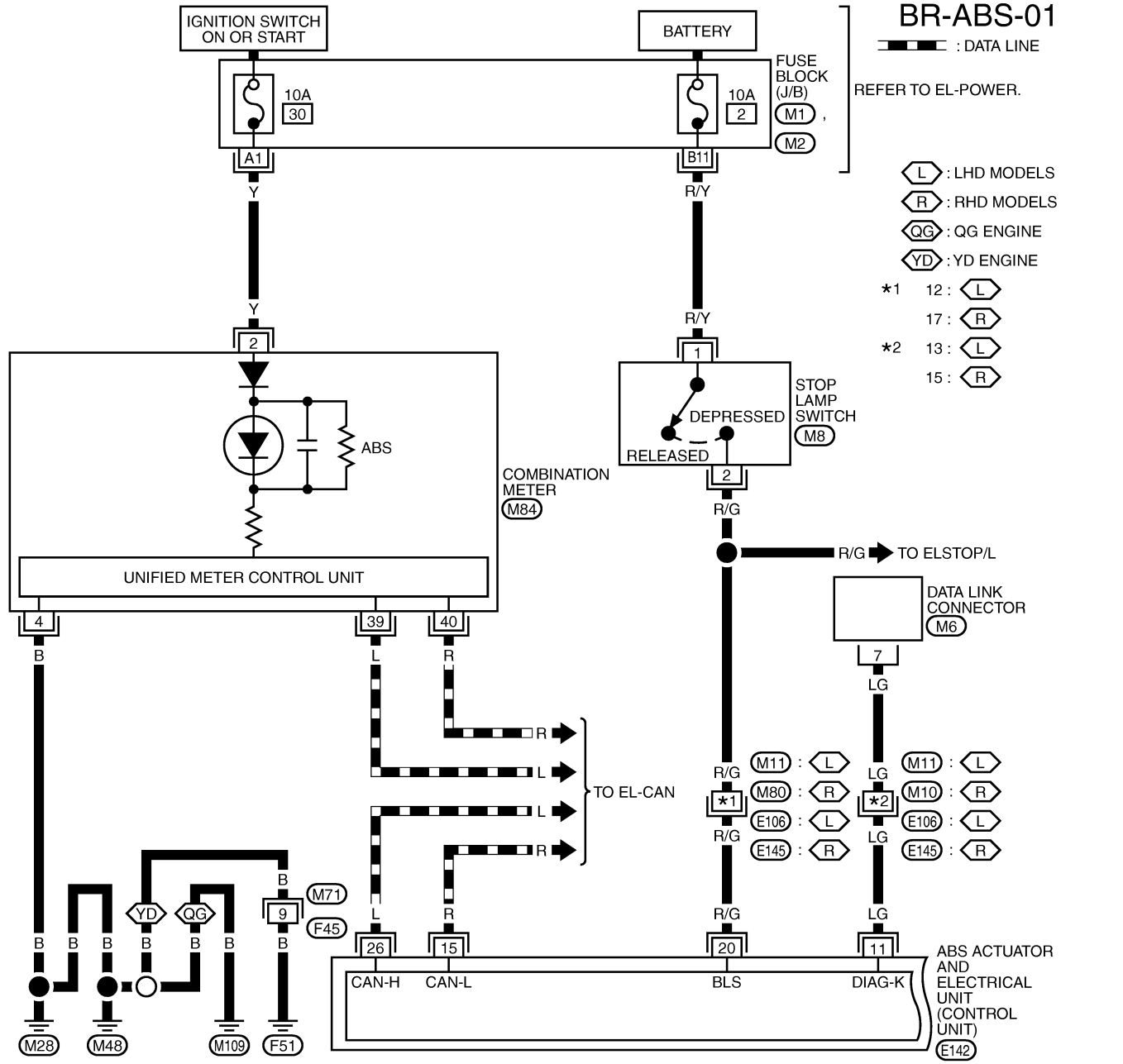

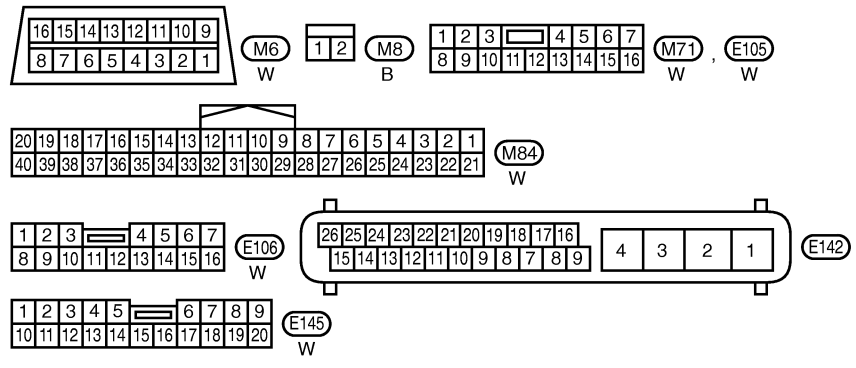

REFER TO THE FOLLOWING.
M1 , M2 -FUSE BLOCK-JUNCTION BOX (J/B)

YBR328A

BR-ABS-02

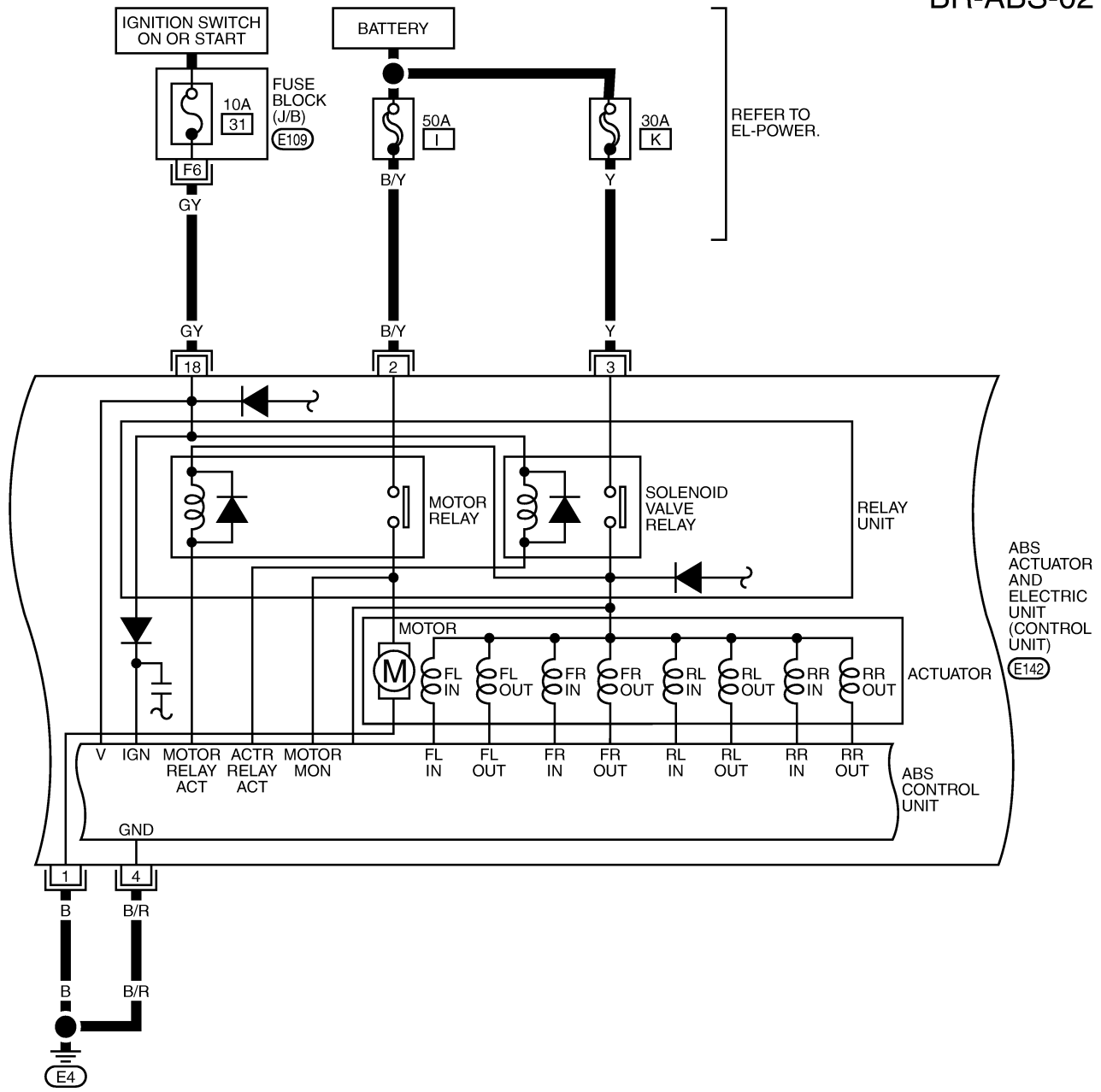

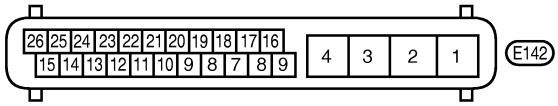

REFER TO THE FOLLOWING.
E109 -FUSE BLOCK-JUNCTION BOX (J/B)

YBR329A

BR-ABS-03

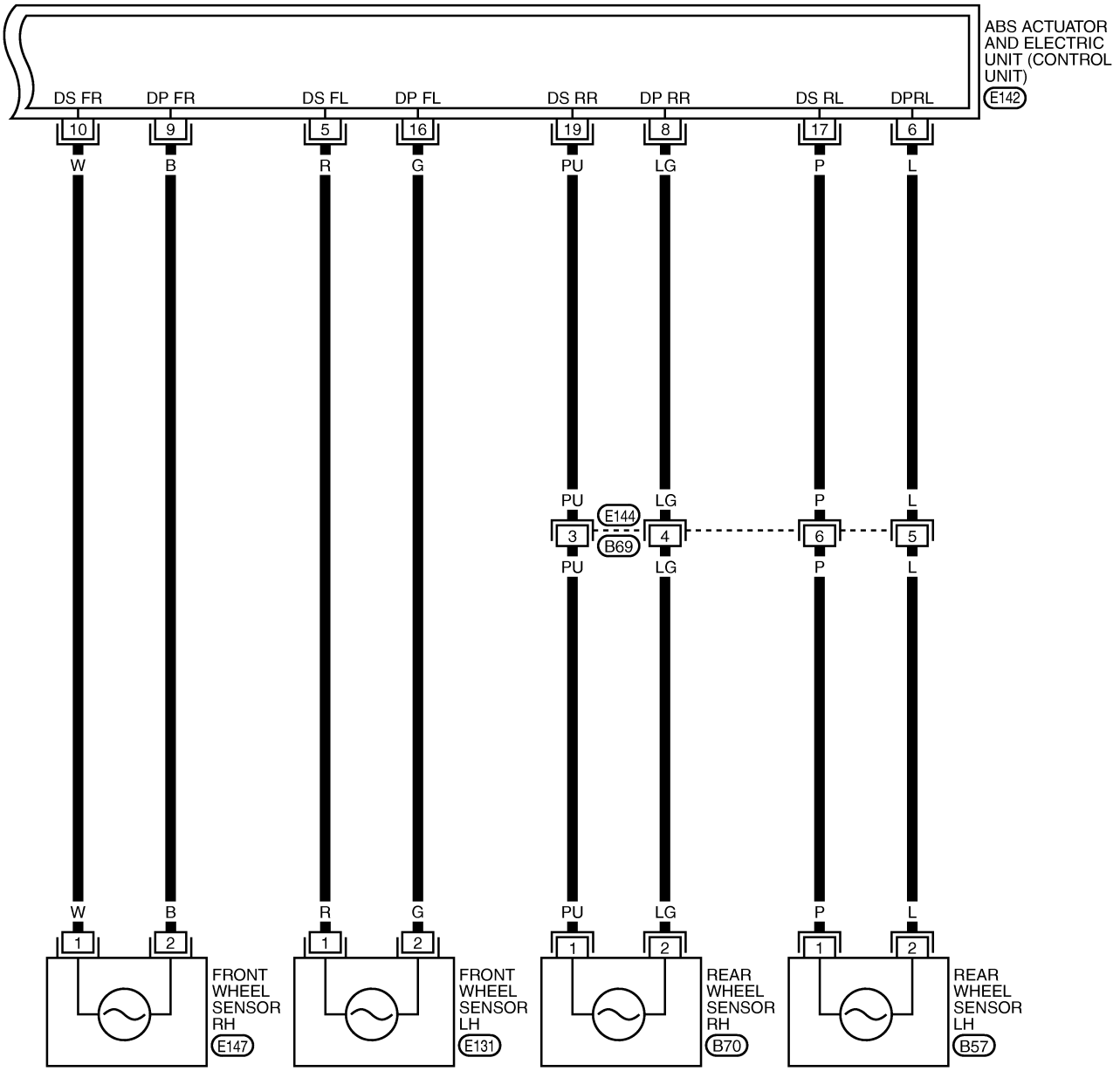

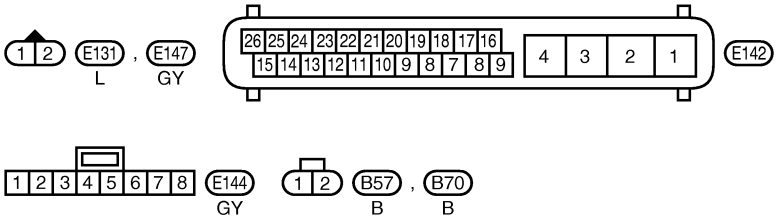

YBR330A

System Description

NLBR0226

CAN (Controller Area Network) is a serial communication line for real time application. It is an on-vehicle multiplex communication line with high data communication speed and excellent error detection ability. Many electronic control units are equipped onto a vehicle, and each control unit shares information and links with other control units during operation (not independent). In CAN communication, control units are connected with 2 communication lines (CAN H line, CAN L line) allowing a high rate of information transmission with less wiring. Each control unit transmits/receives data but selectively reads required data only.

CAN Communication Unit

NLBR0227

Body type	MPV					
Axle	2WD					
Engine	QG18DE		YD22	QG18DE		YD22
Transmission	A/T	M/T		A/T	M/T	
Brake control	ESP			ABS		
CAN communication unit						
ECM	×	×	×	×	×	×
TCM	×			×		
ABS actuator and electric unit (control unit)				×	×	×
ESP/TCS/ABS control unit	×	×	×			
Steering angle sensor	×	×	×			
Smart entrance control unit	×	×	×	×	×	×
Data link connector	×	×	×	×	×	×
Combination meter	×	×	×	×	×	×
CAN communication type	Type 1 (BR-54)	Type 2/Type 3 (BR-56)		Type 4 (BR-58)	Type 5/Type 6 (BR-60)	

×: Applicable

TYPE 1

System Diagram

=NLBR0227S01

NLBR0227S0101

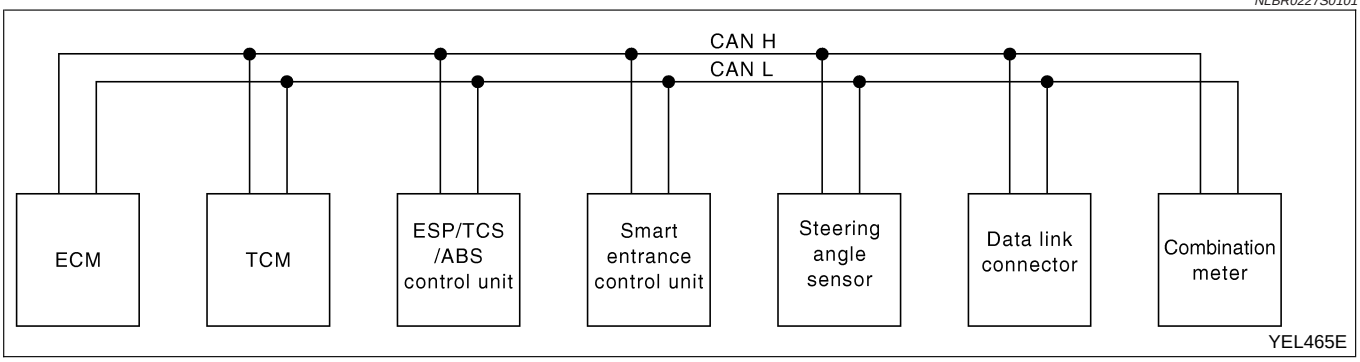

Input/Output Signal Chart

NLBR0227S0102

T: Transmit R: Receive

Signals	ECM	TCM	ESP/TCS/ABS control unit	Smart entrance control unit	Steering angle sensor	Combination meter
Engine speed signal	T		R			R
Brake switch signal		R				T
Rear window defogger signal	R			T		
Heater fan switch signal	R					T
Air conditioner switch signal	R					T
MI signal	T					R
Engine coolant temperature signal	T					R
Fuel consumption signal	T					R
Vehicle speed signal			T			R
	R					T
Seat belt reminder signal				R		T
Headlamp switch signal				T		R
Flashing indicator signal				T		R
Cooling fan speed signal	T			R		
Door switches state signal				T		R
A/C compressor signal	T			R		
A/C compressor feedback signal	T					R

Signals	ECM	TCM	ESP/TCS/ABS control unit	Smart entrance control unit	Steering angle sensor	Combination meter
Accelerator pedal position signal	T		R			
Output shaft revolution signal	R	T				
OD OFF switch signal		R				T
OD OFF indicator signal		T				R
A/T self-diagnosis signal	R	T				
P position signal		T	R			
Steering angle sensor signal			R		T	
A/T position indicator signal	R	T	R			R
ABS warning lamp signal			T			R
Slip indicator lamp signal			T			R
VDC OFF indicator lamp signal			T			R
Brake warning lamp signal			T			R
N position switch signal		R				T
P position switch signal		R				T

TYPE 2/TYPE 3

System Diagram

=NLBR0227S02

NLBR0227S0201

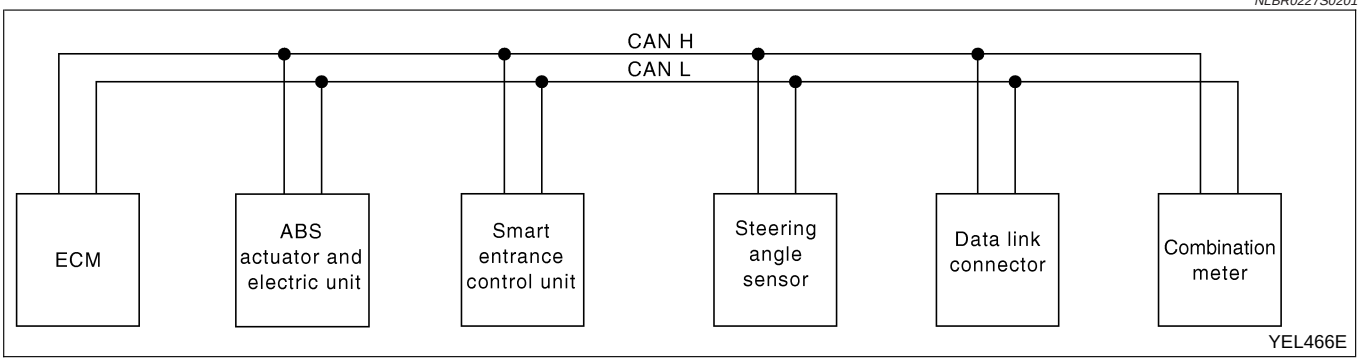

Input/Output Signal Chart

NLBR0227S0202

T: Transmit R: Receive

Signals	ECM	ESP/TCS/ABS control unit	Smart entrance control unit	Steering angle sensor	Combination meter
Engine speed signal	T	R			R
Rear window defogger signal*1	R		T		
Heater fan switch signal*1	R				T
Air conditioner switch signal	R				T
MI signal	T				R
Glow indicator lamp signal*2	T				R
Engine coolant temperature signal	T				R
Fuel consumption signal	T				R
Vehicle speed signal		T			R
	R				T
Seat belt reminder signal			R		T
Headlamp switch signal			T		R
Flashing indicator signal			T		R
Cooling fan speed signal	T		R		
Door switches state signal			T		R
A/C compressor signal	T		R		
A/C compressor feedback signal*1	T				R
Accelerator pedal position signal	T	R			

Signals	ECM	ESP/TCS/ABS control unit	Smart entrance control unit	Steering angle sensor	Combination meter
Steering angle sensor signal		R		T	
ABS warning lamp signal		T			R
Slip indicator lamp signal		T			R
VDC OFF indicator lamp signal		T			R
Brake warning lamp signal		T			R

*1: For QG engine models
*2: For YD engine models

TYPE 4

System Diagram

=NLBR0227S03

NLBR0227S0301

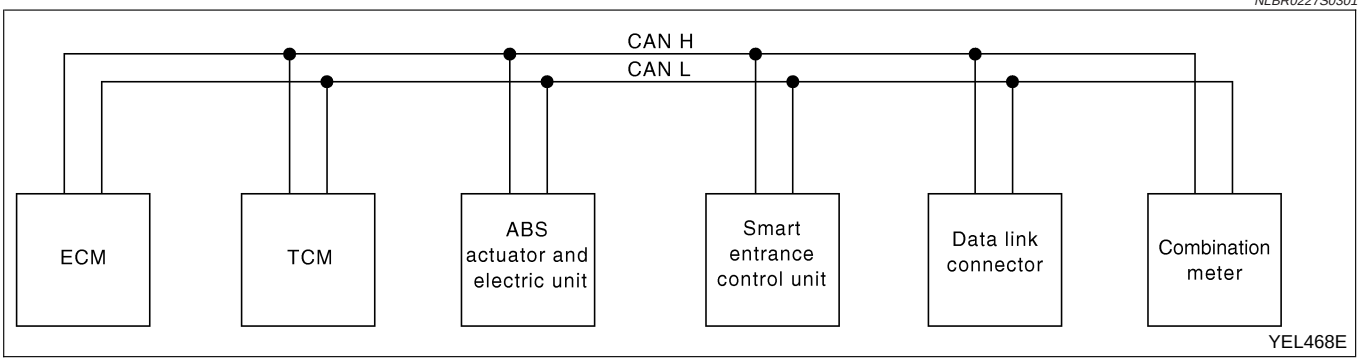

Input/Output Signal Chart

NLBR0227S0302

T: Transmit R: Receive

Signals	ECM	TCM	ABS actuator and electric unit (control unit)	Smart entrance control unit	Combination meter
Engine speed signal	T				R
Brake switch signal		R			T
Rear window defogger signal	R			T	
Heater fan switch signal	R				T
Air conditioner switch signal	R				T
MI signal	T				R
Engine coolant temperature signal	T				R
Fuel consumption signal	T				R
Vehicle speed signal			T		R
	R				T
Seat belt reminder signal				R	T
Headlamp switch signal				T	R
Flashing indicator signal				T	R
Engine cooling fan speed signal	T			R	
Door switches state signal				T	R
A/C compressor signal	T			R	
A/C compressor feedback signal	T				R
Accelerator pedal position signal	T	R			

Signals	ECM	TCM	ABS actuator and electric unit (control unit)	Smart entrance control unit	Combination meter
Output shaft revolution signal	R	T			
ABS operation signal			T		R
OD OFF switch signal		R			T
OD OFF indicator signal		T			R
A/T self-diagnosis signal	R	T			
ABS warning lamp signal			T		R
N position switch signal		R			T
P position switch signal		R			T

TYPE 5/TYPE 6
System Diagram

=NLBR0227S04

NLBR0227S0401

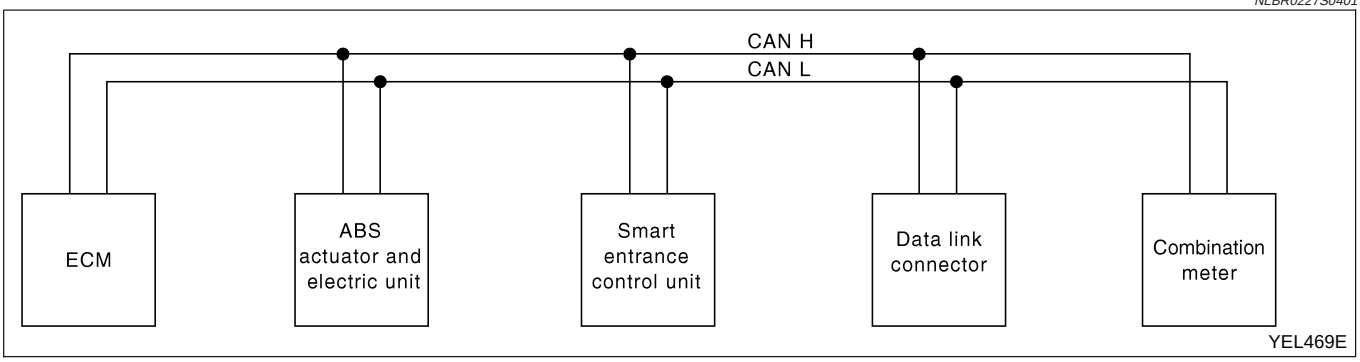

Input/Output Signal Chart

NLBR0227S0402

T: Transmit R: Receive

Signals	ECM	ABS actuator and electric unit (control unit)	Smart entrance control unit	Combination meter
Engine speed signal	T			R
Rear window defogger signal*1	R		T	
Heater fan switch signal*1	R			T
Air conditioner switch signal	R			T
MI signal	T			R
Glow indicator lamp signal*2	T			R
Engine coolant temperature signal	T			R
Fuel consumption signal	T			R
Vehicle speed signal		T		R
	R			T
Seat belt reminder signal			R	T
Headlamp switch signal			T	R
Flashing indicator signal			T	R
Cooling fan speed signal	T		R	
Door switches state signal			T	R
A/C compressor signal	T		R	
A/C compressor feedback signal*1	T			R
ABS operation signal		T		R
ABS warning lamp signal		T		R

*1: For QG engine models
*2: For YD engine models

Trouble Diagnosis Chart by Symptom

NLBR0208

CHECK ITEMS LIST

NLBR0208S01

When ABS warning lamp illuminates, perform self-diagnosis.

Symptom	Condition	Check items	Reference page
ABS warning lamp does not illuminate with ignition ON. (ABS warning lamp check)	IGN-ON	• Blown ABS warning lamp bulb • Blown fuse between ignition and ABS warning lamp. • Open circuit of wiring between ignition and ABS warning lamp. • Malfunction in ABS system	BR-73
ABS warning lamp illuminates with ignition ON, but does not illuminates off after a few seconds. (ABS warning lamp has been illuminated.)	IGN-ON	• ABS actuator and electric unit connector disconnected • Malfunction in ABS system	BR-73

ABS actuator and electric unit Input/Output Signal Standard

NLBR0209

SPECIFICATIONS DEFINED BY CONSULT-II

NLBR0209S01

Items to be monitored	Contents	Data monitor		(Reference) Check points when result was malfunctioning
		Condition	Reference values in normal operation	
Wheel sensor FR, FL, RR, RL [km/h (MPH)]	Vehicle wheel speed	When the vehicle is stopped	0 km/h (0 MPH)	Wheel sensor and harness
		While driving (note:1)	Almost in accordance with speedometer display (within±10%)	
Stop lamp switch	Brake pedal status	Depress the brake pedal.	ON	Stop lamp switch and path
		Release brake pedal.	OFF	
ENGINE RPM SIGNAL [STOP/RUN]	With engine running	Engine RPM below 400 rpm	STOP	Engine RPM signal path
		Engine RPM 400 rpm or higher	RUN	
ABS inlet S/V FR, FL, RR, RL (ON/OFF)	Solenoid valve operation	Actuator and electric unit (solenoid valve) is activated (by active test mode of CONSULT-II) or actuator relay is not activated (in fail-safe mode, before starting engine)	ON	ABS solenoid valve path
ABS outlet S/V FR, FL, RR, RL (ON/OFF)		Actuator and electric unit (solenoid valve) is not activated and actuator relay is activated (vehicle stopped with engine running)	OFF	
ABS actuator relay (ON/OFF)	Actuator relay activated	Vehicle stopped Ignition switch ON	OFF	ABS actuator relay and harness
		Vehicle stopped Engine running	ON	

ABS actuator and electric unit Input/Output Signal Standard (Cont'd)

Items to be monitored	Contents	Data monitor		(Reference) Check points when result was malfunctioning
		Condition	Reference values in normal operation	
ABS motor relay (ON/OFF)	Motor relay and motor activated	(Ignition switch ON or engine is running): ABS inactive	OFF	ABS motor and motor relay harness
		(Ignition switch ON or engine is running): ABS active	ON	
Warning lamp (ON/OFF)	ABS warning lamp ON condition (Note 2)	ABS warning lamp ON	ON	ABS warning lamp and path
		ABS warning lamp OFF condition	OFF	
POWER VOLTAGE (V)	Battery voltage supplied to control module	Ignition switch ON	Approx. 10 - 16V	Control unit power supply circuit
CAN COMM	CAN communications condition	CAN communication normal	OK	CAN communication
		CAN communication error	NG	
CAN CIRC 1	CAN communications condition	CAN communication normal	OK	
		CAN communication error	UNKWN	
CAN CIRC 2	CAN communications condition	CAN communication normal	OK	
		CAN communication error	UNKWN	

NOTE:
1) Check air pressure of tire under normal condition.
2) ABS warning lamp ON/OFF timing
   ON: When ignition switch is turned ON (before engine starts) or when malfunction is detected
   OFF: After engine is started (When the system is in normal condition)

CONSULT-II Functions

NLBR0210

CONSULT-II FUNCTION APPLICATION TABLE

NLBR0210S01

Item	Self-diagnosis	Data monitor	Active test
FR RH SENSOR	×	×	-
FR LH SENSOR	×	×	-
RR RH SENSOR	×	×	-
RR LH SENSOR	×	×	-

Item	Self-diagnosis	Data monitor	Active test
Speed sensor	×	-	-
Stop lamp switch	-	×	-
FR RH IN ABS SOL	×	×	×
FR RH OUT ABS SOL	×	×	×
FR LH IN ABS SOL	×	×	×
FR LH OUT ABS SOL	×	×	×
RR RH IN ABS SOL	×	×	×
RR RH OUT ABS SOL	×	×	×
RR LH IN ABS SOL	×	×	×
RR LH OUT ABS SOL	×	×	×
ABS ACTUATOR RELAY	×	×	-
ABS MOTOR RELAY	×	×	×
ABS warning lamp	-	×	-
Battery voltage	×	×	-
CAN communication	x	x	—
Control module	×	-	-

×: Applicable
–: Not applicable

SELF-DIAGNOSIS

NLBR0210S02

Operation Procedure

NLBR0210S0201

1. After obtaining customer's information, perform BR-70, "Basic inspection".

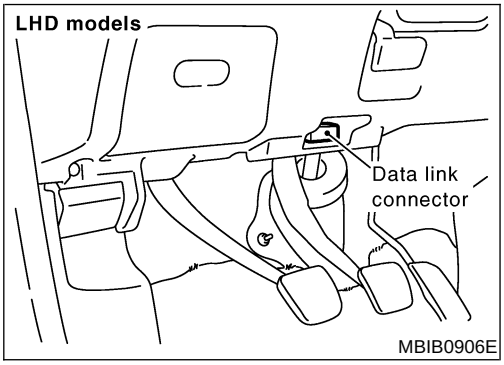

MBIB0906E

2. After turning ignition switch OFF, connect CONSULT-II connector to data link connector on vehicle.
3. Start engine and drive at Approx. 30 km/h (19 MPH) for Approx. 1 minute.

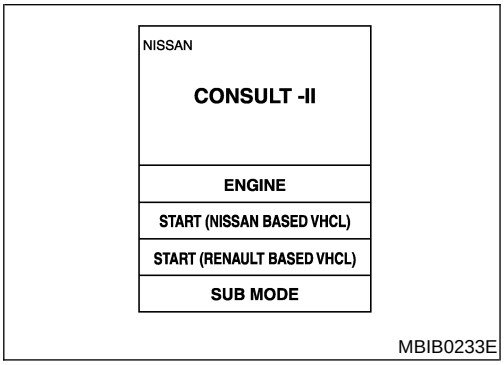

MBIB0233E

4. Stop vehicle. With engine at idle, touch "START (NISSAN BASED VHCL)", "ABS" and "SELF-DIAG RESULTS" on CONSULT-II screen in this order.

CAUTION:
"ABS" may not be displayed on the system selection screen in the following case: When "START (NISSAN BASED VHCL)" was touched just after engine is started or ignition switch is turned to ON. In this case, repeat procedure from step 2.

5. Self-diagnosis result is displayed. (If necessary, touch "PRINT" to print self-diagnosis result.)

- If "NO MALFUNCTION" is displayed, check ABS warning

lamp. Refer to BR-71, "BASIC INSPECTION 3 ABS WARNING LAMP INSPECTION".

6. Check the faulty part indicated by the chart to repair or replace.
7. Start engine and drive at Approx. 30 km/h (19 MPH) for Approx. 1 minute.

CAUTION:

- **Check again to make sure that there is NO FAILURE on other parts.**
- **If wheel sensor [SHORT] is detected, ABS warning lamp does not turn off until following conditions: Vehicle is driven at Approx. 30 km/h (19 MPH) for Approx. 1 minute, even in normal conditions.**

8. Turn OFF ignition switch to prepare for erasing memory.
9. Start engine. Touch "START (NISSAN BASED VHCL)", "ABS", "SELF-DIAG RESULTS" and "ERASE MEMORY" on CONSULT-II screen in this order to erase fault memory.

CAUTION:

If memory cannot be erased, proceed to 6.

10. Drive at Approx. 30 km/h (19 MPH) for Approx. 1 minute. Be sure ABS warning lamp is OFF.

Display Item List

NLBR0210S0202

Faulty lines	Malfunction detecting condition	Check harness
Front RH wheel sensor [OPEN]	Either of following causes may be possible. Circuit of front RH wheel sensor is open. Abnormally high input voltage is caused by a short to power supply on signal lines.	Wheel sensor harness
Front LH wheel sensor [OPEN]	Circuit of front LH wheel sensor is open, or abnormally high input voltage is caused by a short to power supply on signal lines.	
REAR RH wheel sensor [OPEN]	Either of following causes may be possible. Circuit of rear RH wheel sensor is open. Abnormally high input voltage is caused by a short to power supply on signal lines.	
REAR LH wheel sensor [OPEN]	Either of following causes may be possible. Circuit of rear LH wheel sensor is open. Abnormally high input voltage is caused by a short to power supply on signal lines.	
Front RH wheel sensor [short 1] or front RH wheel sensor [short 2] (Note 1), (Note 2)	At RH front wheel sensor, following conditions occur: abnormally high or low input voltage by short to power supply or ground on signal lines, abnormal input signal	
Front LH wheel sensor [short 1] or front left wheel sensor [open 2] (Note 1), (Note 2)	At LH front wheel sensor, following conditions occur: abnormally high or low input voltage by short to power supply or ground on signal lines, abnormal input signal	
Rear RH wheel sensor [SHORT] (Note 1), (Note 2)	At RH rear wheel sensor, following conditions occur: abnormally high or low input voltage by short to power supply or ground on signal lines, abnormal input signal	
Rear LH wheel sensor [SHORT] (Note 1), (Note 2)	At LH rear wheel sensor, following conditions occur: abnormally high or low input voltage by short to power supply or ground on signal lines, abnormal input signal	

Faulty lines	Malfunction detecting condition	Check harness
FR RH IN ABS SOL [OPEN] [SHORT]	At RH front wheel ABS inlet solenoid valve, following conditions occur: open circuit, output voltage is abnormally lower or higher than control value by short to ground on control line.	ABS solenoid valve and actuator relay harness
FR LH IN ABS SOL [OPEN] [SHORT]	At LH front wheel ABS inlet solenoid valve, following conditions occur: open circuit, output voltage is abnormally lower or higher than control value by short to ground on control line.	
RR RH IN ABS SOL [OPEN] [SHORT]	At RH rear wheel ABS inlet solenoid valve, following conditions occur: open circuit, output voltage is abnormally lower or higher than control value by short to ground on control line.	
RR LH IN ABS SOL [OPEN] [SHORT]	At LH rear wheel ABS inlet solenoid valve, following conditions occur: open circuit, output voltage is abnormally lower or higher than control value by short to ground on control line.	
FR RH OUT ABS SOL [OPEN] [SHORT]	At RH front wheel ABS outlet solenoid valve, following conditions occur: open circuit, output voltage is abnormally lower or higher than control value by short to ground on control line.	
FR LH OUT ABS SOL [OPEN] [SHORT]	At LH front wheel ABS outlet solenoid valve, following conditions occur: open circuit, output voltage is abnormally lower or higher than control value by short to ground on control line.	
RR RH OUT ABS SOL [OPEN] [SHORT]	At RH rear wheel ABS outlet solenoid valve, following conditions occur: open circuit, output voltage is abnormally lower or higher than control value by short to ground on control line.	ABS solenoid valve and actuator relay harness
RR LH OUT ABS SOL [OPEN] [SHORT]	At LH rear wheel ABS outlet solenoid valve, following conditions occur: open circuit, output voltage is abnormally lower or higher than control value by short to ground on control line.	
ABS motor [ON error]	ABS actuator motor turned ON when the ABS motor is controlled OFF.	ABS motor relay and harness
ABS motor [OFF error]	ABS actuator motor turned OFF when the ABS motor is controlled ON.	
ABS actuator relay [ON error]	ABS actuator relay turned ON wheel it is controlled OFF.	ABS actuator relay and harness
ABS ACTUATOR RELAY [OFF abnormal]	ABS actuator relay turned OFF wheel it is controlled ON.	
BATTERY VOLTAGE [ABNORMAL]	Power source voltage supplied to ABS actuator and electric unit is abnormally low.	ABS actuator and electric unit power supply circuit
CONTROL UNIT	Function of calculation in ABS actuator and electric unit has failed.	ABS actuator and electric unit, power and ground circuits
CAN COMM CIRCUIT (Note 3)	At CAN communication line, following conditions occur: ● CAN communication line is open or shorted. ● ABS actuator and electric unit (control unit) internal malfunctions. ● Battery voltage for ECM is suddenly interrupted for approximately 0.5 seconds or more.	CAN communication line

(Note 1): When vehicle was stuck on slippery road, and spin its wheels for Approx. 10 - 80 seconds (the period depends on vehicle speed). ABS warning lamp may come on. However, this is not abnormal.

(Note 2): Repair short circuit in sensor. ABS warning lamp will come on when ignition switch is turned ON. According to self-diagnosis operation procedure, drive vehicle at Approx. 30 km/h (19 MPH). Then check ABS warning lamp goes out in about one minute.

(Note 3): When errors are detected in several systems, including CAN communication system, check CAN communication system first.

DATA MONITOR

NLBR0210S03

- For details of data monitor function, refer to CONSULT-II Instruction Manual.

Operation Procedure

NLBR0210S0301

1. Turn the ignition switch to OFF.
2. Connect CONSULT-II connector to data link connector on vehicle.
3. Turn ignition switch ON.

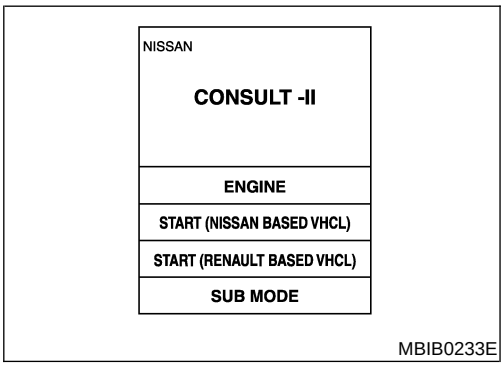

4. Touch "START (NISSAN BASED VHCL)" on the display.

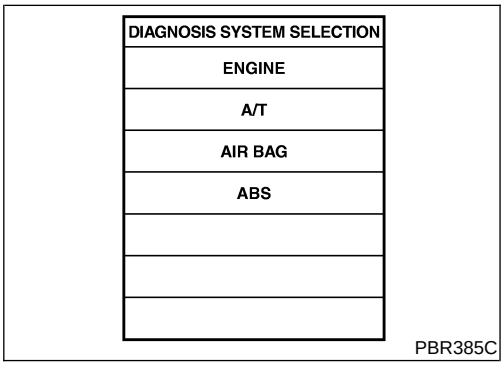

5. Touch "ABS" on display.

CAUTION:
"ABS" may not be displayed on the system selection screen in the following case: When "START (NISSAN BASED VHCL)" was touched just after engine is started or ignition switch is turned to ON. In this case, repeat procedure from step 2.

6. Touch "DATA MONITOR".
7. Return to monitor item selection screen. Touch any of "ECU INPUT SIGNALS", "MAIN SIGNALS", "CAN DIG SUPPORT MNTR" or "SELECTION FROM MENU".
   Refer to following "Data monitor item chart".
8. Touch "MONITOR START".
9. Screen of data monitor is displayed.

Display Item List

NLBR0210S0302

Item (Unit)	Monitor item selection		Remarks
	Main item	Item menu selection	
FR RH SENSOR (km/h)	×	×	Wheel speed calculated by front RH wheel sensor signal is displayed.
FR LH SENSOR (km/h)	×	×	Wheel speed calculated by front LH wheel sensor signal is displayed. (Note 1)
RR RH SENSOR (km/h)	×	×	Wheel speed calculated by rear RH wheel sensor signal is displayed. (Note 1)
RR LH SENSOR (km/h)	×	×	Wheel speed calculated by rear LH wheel sensor signal is displayed.
STOP LAMP SW	×	×	Operating condition of ABS warning lamp by control unit is displayed.

Item (Unit)	Monitor item selection		Remarks
	Main item	Item menu selection	
FR RH IN SOL	×	×	Operating condition (ON/OFF) of rear RH ABS inlet solenoid valve is displayed.
FR RH OUT SOL	×	×	Operating condition (ON/OFF) of rear RH ABS outlet solenoid valve is displayed.
FR LH IN SOL	×	×	Operating condition (ON/OFF) of rear RH ABS inlet solenoid valve is displayed.
FR LH OUT SOL (ON/OFF)	×	×	Operating condition (ON/OFF) of rear RH ABS outlet solenoid valve is displayed.
RR RH IN SOL (ON/OFF)	×	×	Operating condition (ON/OFF) of rear RH ABS inlet solenoid valve is displayed.
RR RH OUT SOL (ON/OFF)	×	×	Operating condition (ON/OFF) of rear RH ABS outlet solenoid valve is displayed.
RR LH IN SOL (ON/OFF)	×	×	Operating condition (ON/OFF) of rear RH ABS inlet solenoid valve is displayed.
RR LH OUT SOL (ON/OFF)	×	×	Operating condition (ON/OFF) of rear RH ABS outlet solenoid valve is displayed.
ACTUATOR RLY (ON/OFF)	×	×	Condition of ABS actuator relay (ON/OFF) is displayed.
MOTOR RLY (ON/OFF)	×	×	Condition of ABS motor relay (ON/OFF) is displayed.
WARNING LAMP (ON/OFF)	×	×	Indicates ABS warning lamp operating condition
BATTERY VOLT	×	×	Indicates voltage supplied by ABS actuator and electric unit
CAN COMM (OK/NG)	—	—	CAN communication signal (OK/NG) status is displayed.
CAN CIRC 1 (OK/UNKWN)	—	—	CAN communication signal (OK/UNKWN) status is displayed.
CAN CIRC 2 (OK/UNKWN)	—	—	
Voltage	—	×	Displays values measured by voltage probe

×: Applicable
–: Not applicable

ACTIVE TEST

NLBR0210S04

Operation Procedure

NLBR0210S0401

CAUTION:

- **Do not perform active test wheel running.**
- **Be sure completely bleed air from brake system.**
- **Active test cannot be performed with ABS warning lamp on.**

1. Connect CONSULT-II to data link connector and start engine.

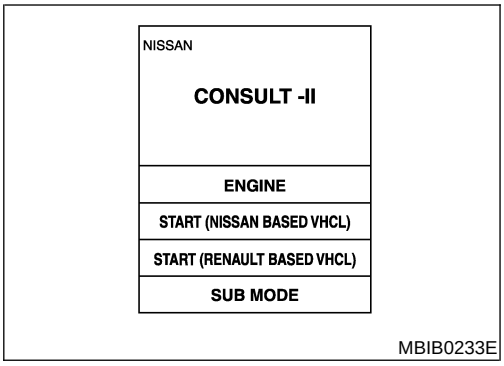

2. Touch "START (NISSAN BASED VHCL)" on the display.

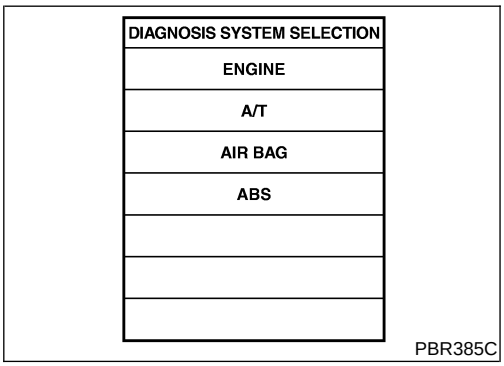

3. Touch "ABS".
4. Touch "ACTIVE TEST".
5. Test item selection screen is displayed.
6. Touch test item.
7. Touch "START" with "MAIN SIGNALS" line inverted.
8. Active test screen is displayed.

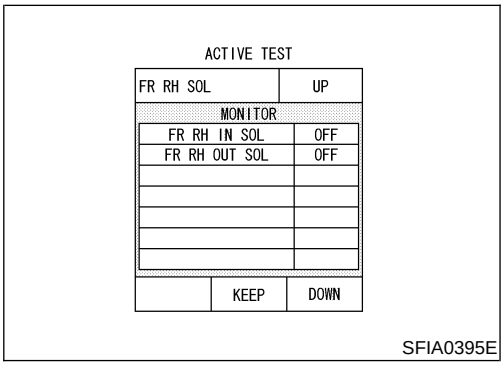

Display Item List

NLBR0210S0402

ABS solenoid valve

Touch "UP", "KEEP" and "DOWN". Check ABS solenoid valves (inlet/outlet) operate as the following chart using screen monitor.

Operation	Up	Keep	Down
ABS inlet S/V	OFF	ON	ON
ABS outlet S/V	OFF	OFF	ON*

*: ON for 1 to 2 seconds after touch, and then OFF

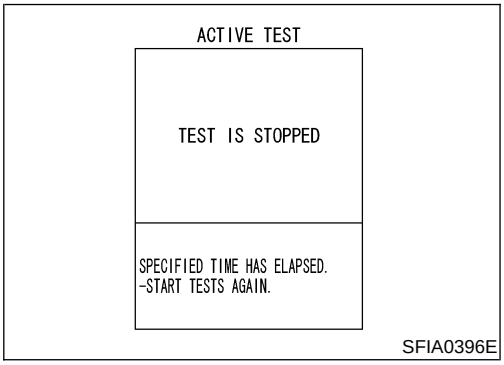

NOTE:

- If active test is performed with brake pedal depressed, pedal stroke may be changed. This is a normal condition.
- "TEST STOP" is displayed 10 seconds later from the operation start.
- To perform test again after "TEST STOP" is displayed, repeat step 6 of operation procedure.

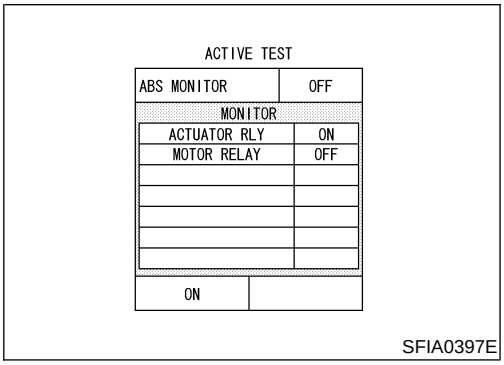

ABS motor

Touch "ON" and "OFF" on screen. Check ABS motor relay operates as shown in the following chart.

Operation	ON	OFF
ABS actuator	ON	ON
ABS motor	ON	OFF

NOTE:

- If active test is performed with brake pedal depressed, pedal stroke may be changed. This is a normal condition.

- "TEST STOP" is displayed 10 seconds later from the operation start.

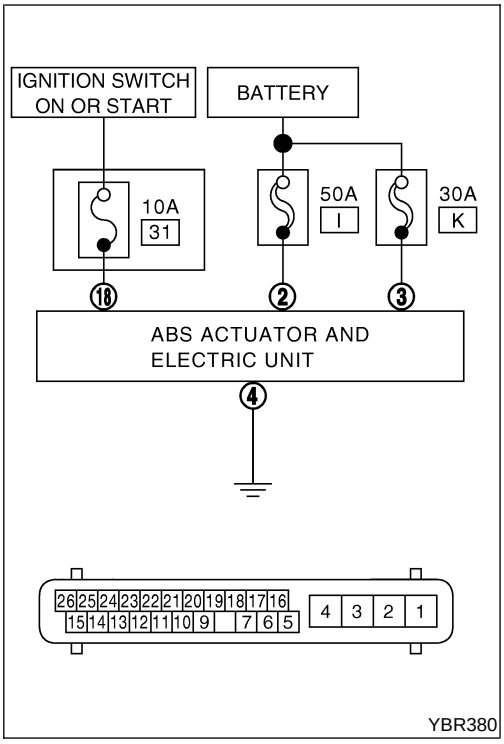

ABS Actuator and Electric Unit

NLBR0211

Disconnect each ABS actuator and electric unit E1 (Type I), E217 (Type II) connector. Confirm continuity and resistance value between each pair of ABS actuator and electric unit harness connector.

CAUTION:

Be sure ABS motor is securely grounded.

Basic Inspection 1 Brake Fluid Level and Leakage Inspection

NLBR0212

1. Check fluid level in brake reservoir tank. If fluid level is low, refill brake fluid.
2. Check area around brake piping and ABS actuator and electric unit for leaks. If a leak or oozing is detected, check as follows:

- If connections at ABS actuator and electric unit are loose, tighten piping to the specified torque. Then check again for leaks, and be sure there is no fluid leak.
- If the flare nuts at the connections and the threads of the ABS actuator and electric unit are damaged, replace the damaged parts. Then check again for leaks, and make sure that there is no fluid leak.
- If leak or oozing is detected except for ABS actuator and electric unit connections, wipe it with clean cloth. Then check again for leaks. If there is still leak or oozing, replace damaged part.
- If leak or oozing is detected on ABS actuator and electric unit, wipe with a clean cloth. Check again for leaks, and if there is still leak or oozing, replace ABS actuator and electric unit.

CAUTION:

ABS actuator and electric unit body cannot be disassembled.

Basic Inspection 2 Inspection for Loose Power Supply Terminal

NLBR0213

Check battery for looseness on battery positive/negative terminals and ground connection.

Basic Inspection 3 ABS Warning Lamp Inspection

NLBR0214

1. Be sure ABS warning lamp turns on when ignition switch is turned ON. If it does not turn on, check CAN communications. Refer to BR-73. If there are no errors with CAN communications, check ABS warning lamp harness.
2. Be sure ABS warning lamp turns off after approximately 1 second when ignition switch is turned ON. If it does not turn off, perform self-diagnosis.
3. After driving the vehicle at Approx. 30 km/h (19 MHP) for a few seconds, check ABS warning lamp do not illuminate.
4. After completing the self-diagnosis, always erase the diagnosis memory.

Wheel Sensor System

NLBR0215

1	TIRE INSPECTION	
Check air pressure, wear, and size.		
Are air pressure, wear, and size within specifications?		
Yes	▶	GO TO 2.
No	▶	Adjust air pressure, or replace tire.

2	SENSOR ROTOR INSPECTION	
Check sensor rotor tooth for damage.		
OK or NG		
OK	▶	GO TO 3.
NG	▶	Replace sensor rotor.

3 CHECK THE CONNECTOR

1. Remove both the malfunctioning wheel sensor (identified at control unit) and the ABS actuator and electric unit connector. Check the deformation of the terminal or if the connection is at the incomplete state. Then connect the connectors.
2. Operate self-diagnosis.

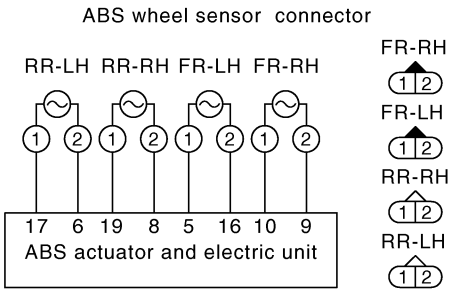

YBR363

Does ABS warning lamp illuminate?

Yes	▶	GO TO 4.
No	▶	Check is completed.

4 CHECK WHEEL SENSOR

Check internal resistance of wheel sensor.

Resistance: 1.44 - 1.76 kΩ

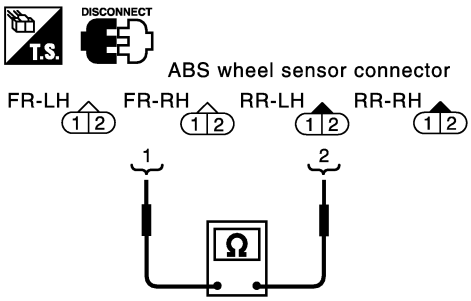

SFIA0419E

OK or NG

OK	▶	GO TO 5.
NG	▶	Replace wheel sensor.

5	CHECK WHEEL SENSOR CIRCUIT

1. Disconnect control unit connector and wheel sensor connector.
2. Check continuity between the ABS actuator and electric unit harness connector and wheel sensor harness connector.

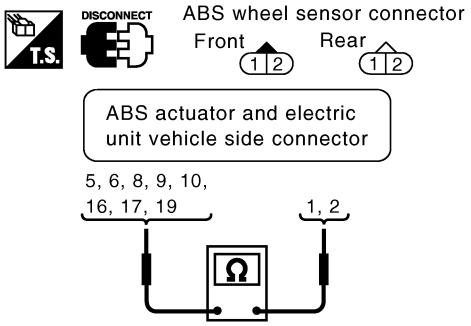

YBR364

OK or NG

OK	▶	Replace ABS actuator and electric unit.
NG	▶	Repair or replace the harness.

CAN Communication Lines

NLBR0228

1	CHECK CONNECTOR

1. Disconnect ABS actuator and electric unit (control unit) connector, check terminal for deformation disconnection, looseness, and so on. If there is an error, repair or replace the terminal.
2. Securely reconnect connector and perform self-diagnosis.

Is "CAN COMM CIRCUIT" displayed in self-diagnosis display items?

Yes	▶	Print out self-diagnosis results and go to 2.
No	▶	Connector terminal connection is loose, damaged, open or shorted.

2	CHECK CAN COMMUNICATION SYSTEM

Check data monitor item "CAN DIAG SUPPORT MNTR".

Normal	Error (example)
CAN COMM: OK	CAN COMM: OK
CAN CIRC 1: OK	CAN CIRC 1: UNKWN
CAN CIRC 2: OK	CAN CIRC 2: UNKWN

MTBL1786

	▶	After printing out the monitor item, go to CAN system. Refer to EL-459.

ABS Warning Lamp Does Not Illuminate. (ABS Warning Lamp Does Not Come on When the Ignition Switch is Turned ON.)

NLBR0216

Replace the combination meter control unit.

ABS Warning Lamp Illuminates with Ignition ON, but Does Not Illuminates Off After a Few Seconds. (ABS Warning Lamp has been Illuminated.)

NLBR0217

1	ABS ACTUATOR AND ELECTRIC UNIT CONNECTOR CONNECTION INSPECTION	
Remove glove box on the passenger side and check ABS actuator and electric unit connector for proper connection.		
	OK or NG	
OK	▶	GO TO 2. (ABS actuator and electric unit connector is properly connected.)
NG	▶	Connect the ABS actuator and electric unit connector and perform inspection again.

2	USING CONSULT-II, PERFORM SELF-DIAGNOSIS	
Connect the CONSULT-II and perform self-diagnosis.		
	OK or NG	
OK	▶	Normal (No self-diagnosis malfunction indicated.)
NG	▶	Perform inspection according to the trouble codes displayed on the CONSULT-II. Refer to the “DTC chart”.

1. ABS Works Frequently

NLBR0218

1	INSPECTION START	
Check the wheel sensor system. ● Sensor mounting inspection ● Sensor pick-up inspection for iron chips ● Sensor rotor inspection (e.g. Number of teeth, damaged teeth) ● Sensor connector engagement inspection **OK or NG**		
OK	▶	GO TO 2.
NG	▶	Refer to wheel sensor and rotor lines.

2	LOOSENESS INSPECTION	
Check the front and rear axle for looseness. **OK or NG**		
OK	▶	BR-75, “2. Unexpected Pedal Action”
NG	▶	Axle inspection and repair

2. Unexpected Pedal Action

NLBR0219

1	BRAKE PEDAL STROKE INSPECTION	
Check the brake pedal stroke. **Is stroke excessively long?**		
Yes	▶	Check the bleeding and brake system.
No	▶	GO TO 2.

2	PEDAL FORCE INSPECTION	
Check that the brake is effective with the pedal depressed. **Is the pedal heavy, but effective?**		
Yes	▶	Normal
No	▶	GO TO 3.

3	CONNECTOR AND PERFORMANCE INSPECTION	
Disconnect the actuator relay unit connector to deactivate the ABS function. Check that the brake is effective. **Is the brake effective?**		
Yes	▶	GO TO 4.
No	▶	Brake line inspection

4	ABS WARNING LAMP INDICATOR INSPECTION	
Check that the ABS warning lamp illuminates. **Does the ABS warning lamp illuminate?**		
Yes	▶	Perform the self-diagnosis.
No	▶	GO TO 5.

5	WHEEL SENSOR INSPECTION	
Check the wheel sensor system. ● Sensor mounting inspection ● Sensor pick-up inspection for iron chips ● Sensor rotor inspection (e.g. Number of teeth, damaged teeth) ● Sensor connector engagement inspection		
OK or NG		
OK	▶	Normal
NG	▶	Wheel sensor and rotor lines repair

3. Longer Stopping Distance

NLBR0220

1	INSPECTION START	
Check that the stopping distance when braking becomes longer only on a snowy or gravel road.		
Does the stopping distance when braking become longer only on a snowy or gravel road?		
Yes	▶	It may be longer than that of vehicle without ABS.
No	▶	GO TO 2.

2	PERFORMANCE CHECK	
Disconnect the actuator relay box to deactivate the ABS function.		
Is the stopping distance still longer?		
Yes	▶	● Brake line air bleeding ● Brake line inspection
No	▶	GO TO 3.

3	ABS WARNING LAMP INDICATOR INSPECTION	
Check that the ABS warning lamp illuminates.		
Does the ABS warning lamp illuminate?		
Yes	▶	Perform the self-diagnosis.
No	▶	GO TO 4.

4	WHEEL SENSOR INSPECTION	
Check the wheel sensor system. ● Sensor mounting inspection ● Sensor pick-up inspection for iron chips ● Sensor rotor inspection (e.g. Number of teeth, damaged teeth) ● Sensor connector engagement inspection		
OK or NG		
OK	▶	Normal
NG	▶	Wheel sensor and rotor lines repair

4. ABS Does Not Work

NLBR0221

1	ABS WARNING LAMP INDICATOR INSPECTION	
Check that the ABS warning lamp illuminates. **Does the ABS warning lamp illuminate?**		
Yes	▶	Perform the self-diagnosis.
No	▶	GO TO 2.

2	WHEEL SENSOR INSPECTION	
Check the wheel sensor system. ● Sensor mounting inspection ● Sensor pick-up inspection for iron chips ● Sensor rotor inspection (e.g. Number of teeth, damaged teeth) ● Sensor connector engagement inspection **OK or NG**		
OK	▶	Normal
NG	▶	Wheel sensor and rotor lines repair

5. Pedal Vibration and Noise

NLBR0222

1	SYMPTOM CHECK	
Check the brake system for pedal vibration or noise at the engine start. **OK or NG**		
OK	▶	Perform the self-diagnosis.
NG	▶	GO TO 2.

2	SYMPTOM CHECK 2	
Check the brake system for pedal vibration or noise when the pedal depressed lightly (just put a foot on). **CAUTION:** **Under the following driving conditions, the wheel speed will fluctuates, resulting in ABS activation.** ● **When shifting gears** ● **High speed cornering** ● **When a gust of wind** **OK or NG**		
OK	▶	GO TO 3.
NG	▶	Normal

3	SYMPTOM CHECK 3	
Does the symptom appear during normal braking operation? **CAUTION:** **ABS may work in following driving conditions even if there is no sudden brake.** ● **When road friction is low.** ● **High speed cornering** ● **When a gust of wind** **OK or NG**		
OK	▶	GO TO 4.
NG	▶	Normal

4	SYMPTOM CHECK 4	
Check that the symptom is reproduce when the engine speed is increased with the vehicle stopped.		
OK or NG		
OK	▶	GO TO 5.
NG	▶	● Normal. **CAUTION:** **This symptom may appear with vehicle stopped.**

5	SYMPTOM CHECK 5	
Check that the symptom is reproduce when any switch of electrical equipment is operated.		
OK or NG		
OK	▶	Check that there are no radio, antenna, and antenna lead-in wires (including wiring) near control unit.
NG	▶	GO TO 6.

6	ABS WARNING LAMP INSPECTION	
Check that the ABS warning lamp turns on.		
OK or NG		
OK	▶	Perform the self-diagnosis.
NG	▶	GO TO 7.

7	WHEEL SENSOR INSPECTION	
Check the wheel sensor system. ● Sensor mounting inspection ● Sensor pick-up inspection for iron chips (e.g. Number of teeth, damaged teeth) ● Sensor connector engagement inspection ● Wheel sensor path harness and connector inspection		
OK or NG		
OK	▶	Normal
NG	▶	Wheel sensor and rotor lines repair

CAUTION:
Be careful not to damage sensor edge and sensor rotor teeth. When removing the front or rear wheel hub assembly, first remove the ABS wheel sensor from the assembly. Failure to do so may result in damage to the sensor wires making the sensor inoperative.

Wheel Sensors

NLBR0223S01

SEC. 476

Front wheel sensor (LH)

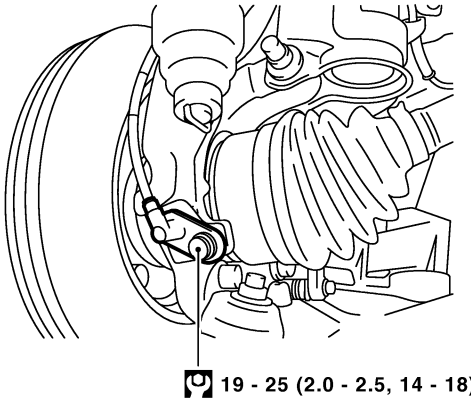

19 - 25 (2.0 - 2.5, 14 - 18)

Rear wheel sensor (LH)

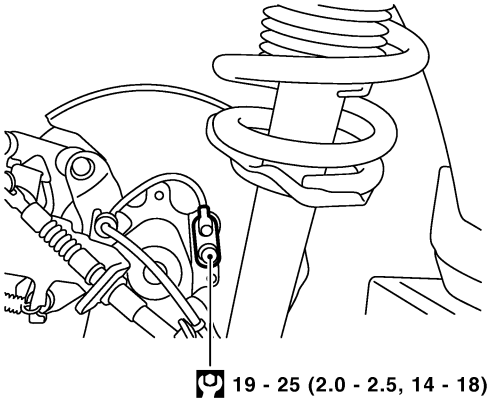

19 - 25 (2.0 - 2.5, 14 - 18)

: N•m (kg-m, ft-lb)

YBR365

ABS Actuator and Electric Unit

NLBR0223S02

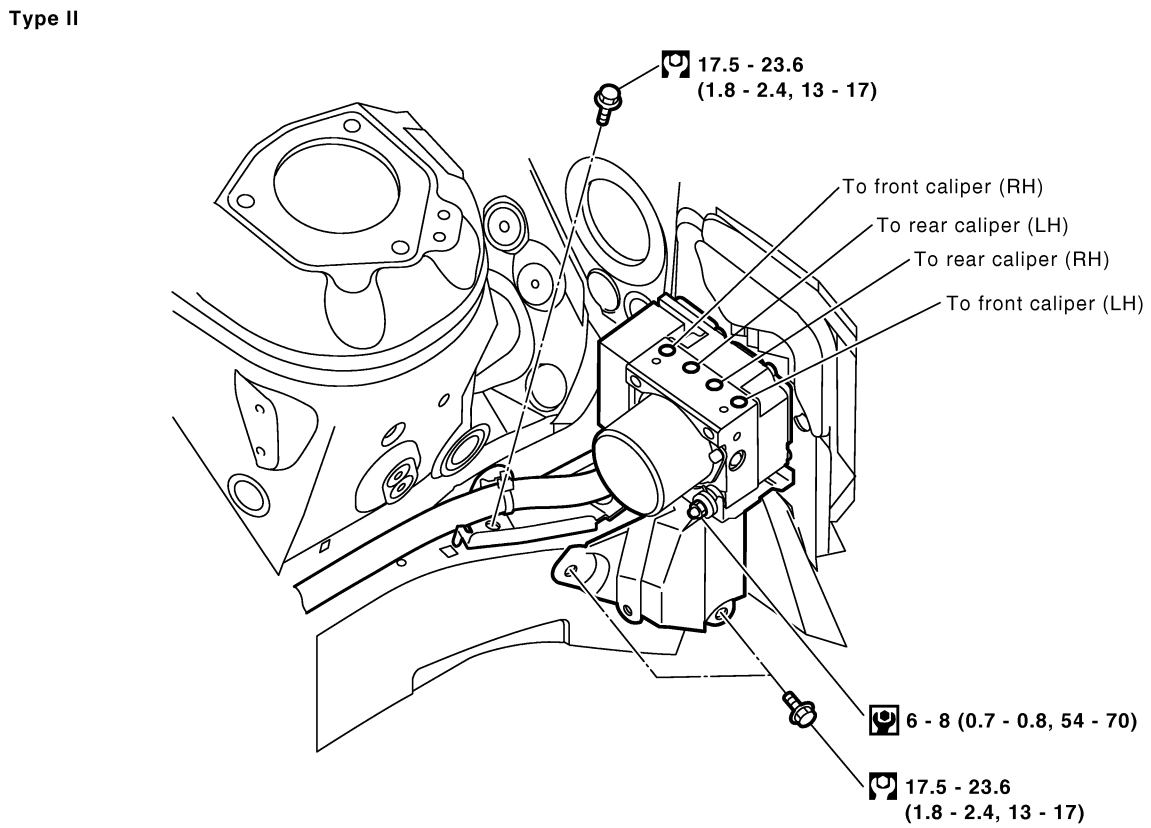

REMOVAL

NLBR0223S0201

1. Disconnect battery cable.
2. Drain brake fluid.
3. Remove mounting bracket fixing bolts and nuts.
4. Disconnect connector, brake pipes and remove fixing nuts.

INSTALLATION

NLBR0223S0202

CAUTION:

After installation, refill brake fluid. Then bleed air.

1. Connect brake pipes temporarily.
2. Tighten fixing bolts and nuts.
3. Tighten brake pipes.
4. Connect connector and battery cable.

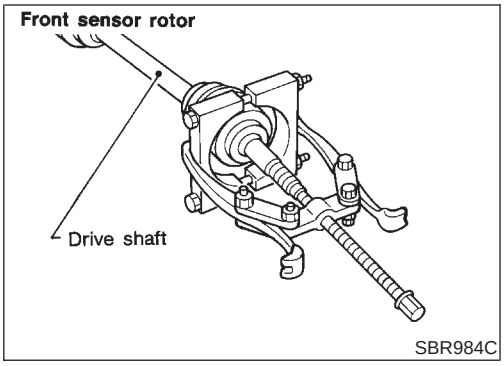

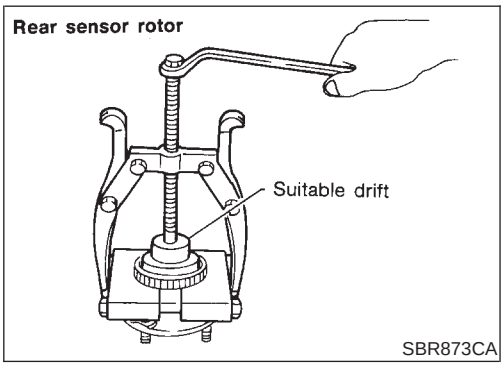

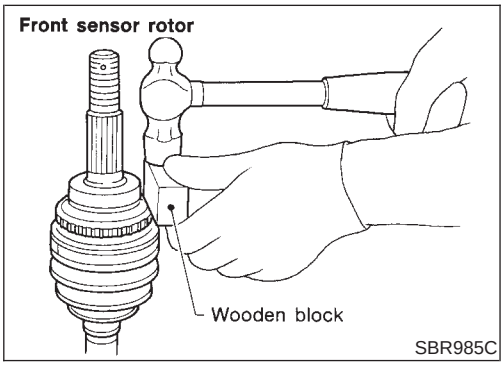

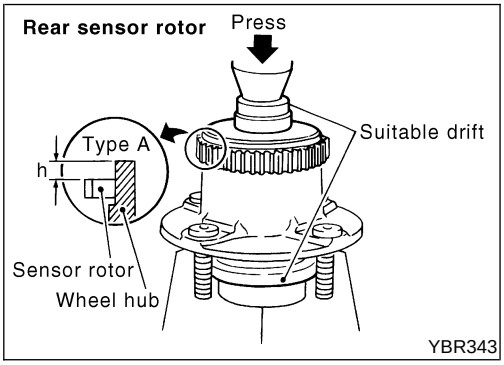

Sensor Rotor

NLBR0223S03

REMOVAL

NLBR0223S0301

1. Remove the drive shaft and rear wheel hub. Refer to “Drive Shaft” and “Wheel Hub” in AX section.
2. Remove the sensor rotor using suitable puller, drift and bearing replacer.

INSTALLATION

NLBR0223S0302

Install the sensor rotor. For front sensor rotor, use hammer and wooden block. For rear sensor rotor, use suitable drift and press.

- Always replace sensor rotor with new one.

- Pay attention to the dimension of rear sensor rotor as show in figure.

  Height: “h”:

  h: 12.5 - 13.5 mm (0.49 - 0.531 in)

Adjustment of Steering Angle Sensor Neutral Position

NLBR0160

After removing/installing or replacing ABS actuator and electric unit (control unit), steering angle sensor, steering components, suspension components, or after adjusting wheel alignment, make sure to adjust neutral position of steering angle sensor before running vehicle.

Situation	Adjustment of steering angle sensor neutral position
Removing/Installing ABS actuator and electric unit (control unit)	×
Removing/Installing steering angle sensor	×
Removing/Installing steering components	×
Removing/Installing suspension components	×
Change tires to new ones	–
Tire rotation	–
Adjusting wheel alignment	×

×: Required
–: Not required

CAUTION:
To adjust neutral position of steering angle sensor, make sure to use CONSULT-II.
(Adjustment cannot be done without CONSULT-II.)

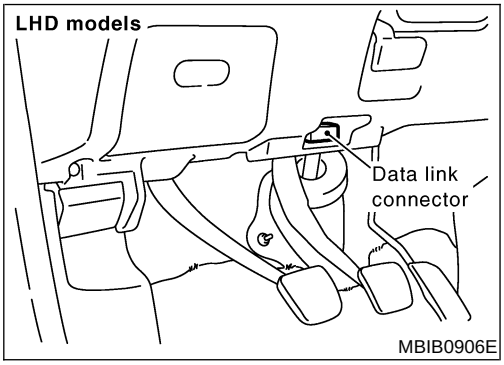

MBIB0906E

1. Stop vehicle with front wheels in straight-ahead position.
2. Connect CONSULT-II and CONSUL-II CONVERTER to data link connector on vehicle, and turn ignition switch ON (do not start engine).
3. Touch “ABS”, “WORK SUPPORT” and “ST ANGLE SENSOR ADJUSTMENT” on CONSULT-II screen in this order.

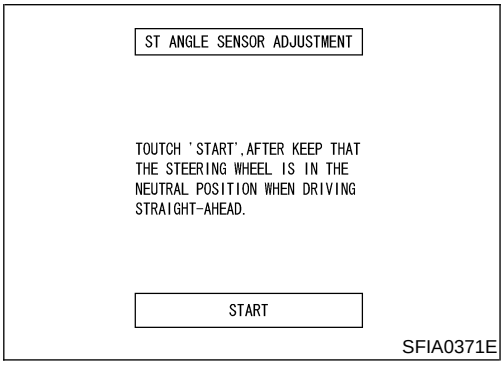

SFIA0371E

4. Touch “START”.

CAUTION:
Do not touch steering wheel while adjusting steering angle sensor.

5. After approximately 10 seconds, touch “END”. (After approximately 60 seconds, it ends automatically.)
6. Turn ignition switch OFF, then turn it ON again.

CAUTION:
Be sure to perform above operation.

7. Run vehicle with front wheels in straight-ahead position, then stop.

8. Select "DATA MONITOR", "SELECTION FROM MENU", and "STR ANGLE SIG" on CONSULT-II screen. Then make sure "STR ANGLE SIG" is within 0±2.5 deg. If value is more than specification, repeat steps 3 to 7.
9. Erase memory of ABS actuator and electric unit (control unit) and ECM.
10. Turn ignition switch to OFF.

System Diagram

NLBR0161

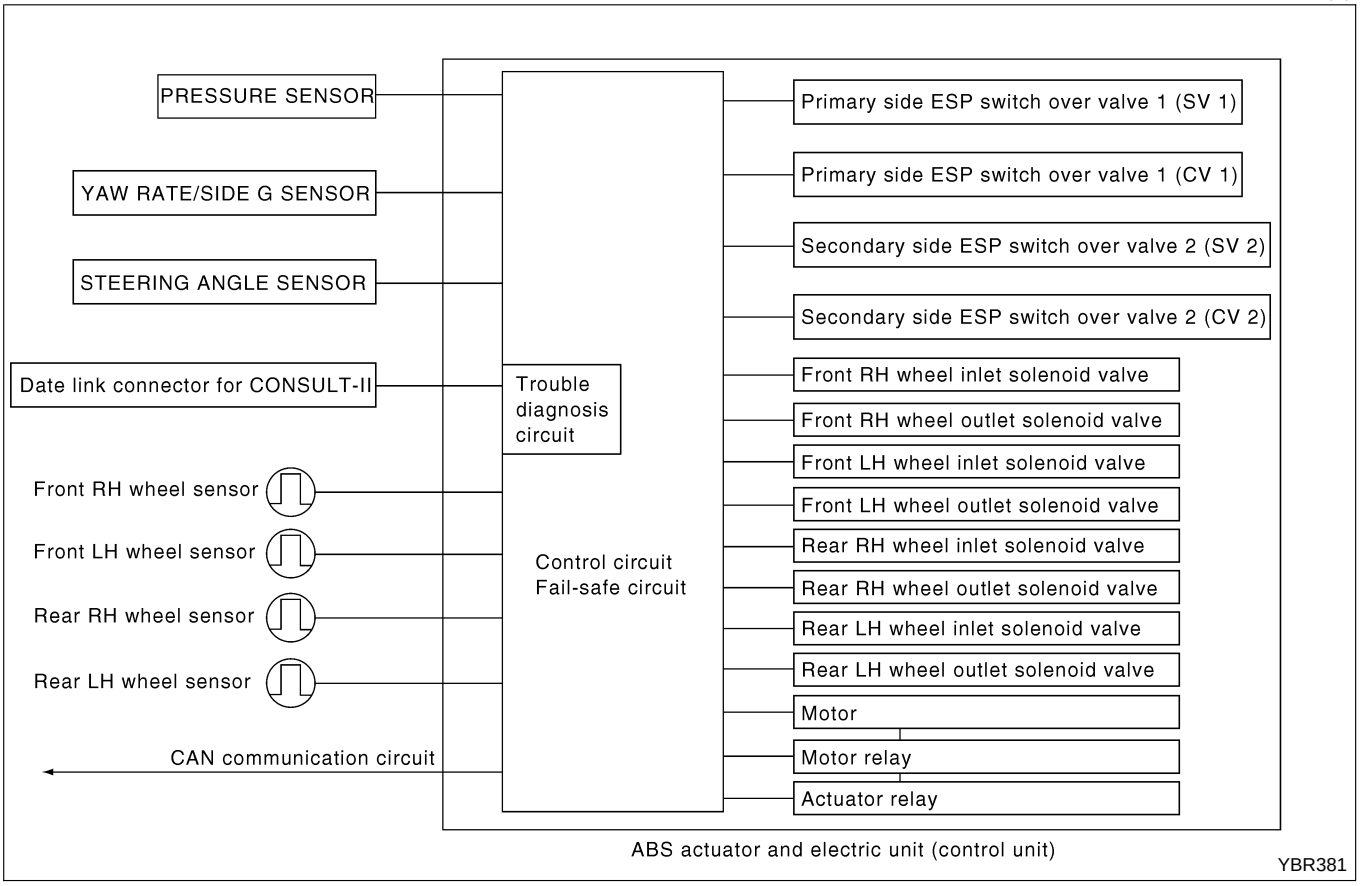

System Component Parts

NLBR0162

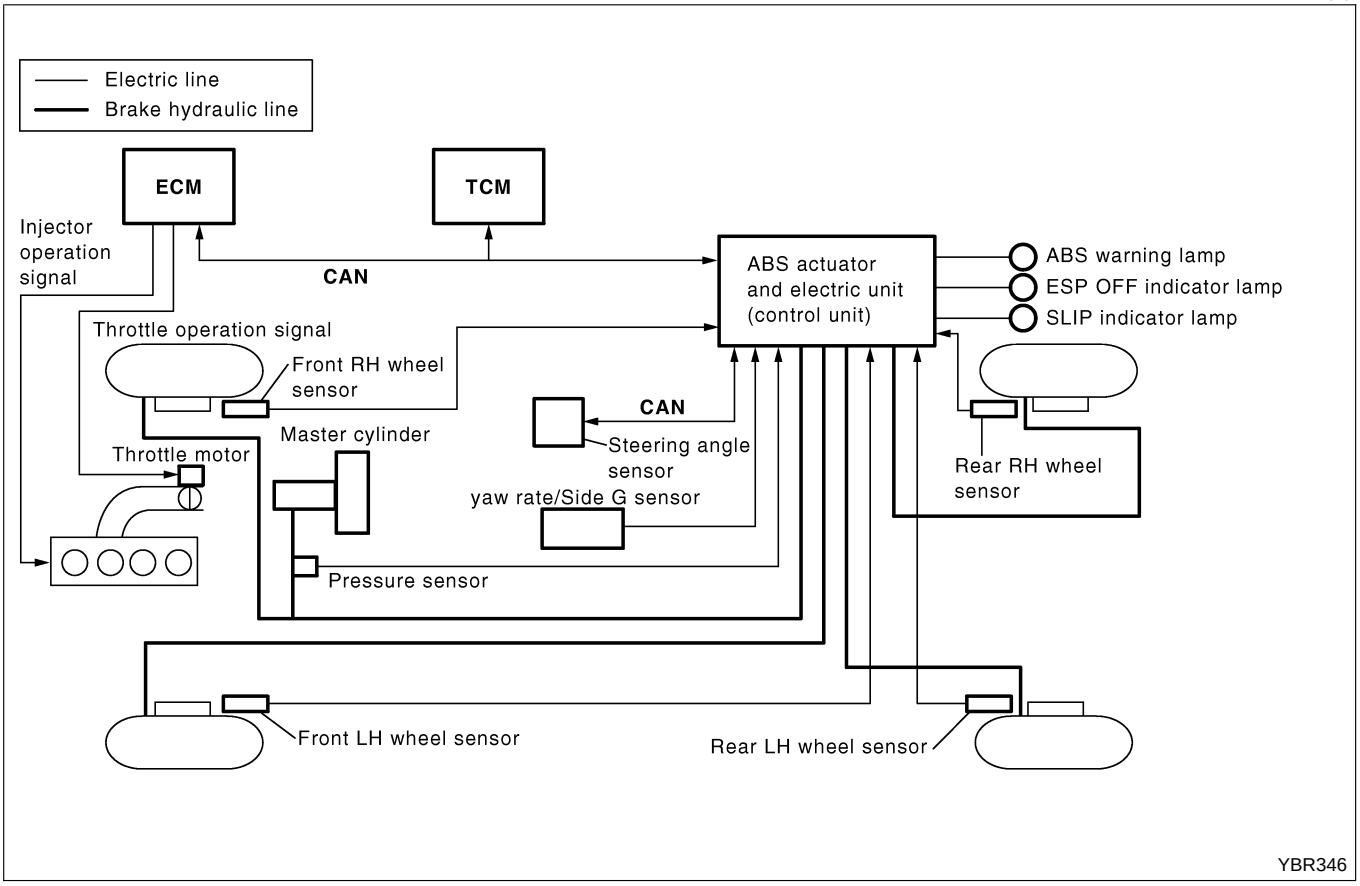

ESP Function

NLBR0163

- In addition to the TCS/ABS function, the driver steering amount and brake operation amount are detected from the steering angle sensor and pressure sensor, and the vehicle's driving status (amount of under steering/over steering) is determined from information from the yaw rate/side/decel G sensor, wheel sensor, etc., and this information is used to improve vehicle stability by controlling the braking and engine power to all four wheels.
- The SLIP indicator lamp flashes to inform the driver of ESP operation.
- During ESP operation, the body and brake pedal lightly vibrate and mechanical noises may be heard. This is normal.
- The ABS warning lamp, ESP OFF indicator lamp, and SLIP indicator lamp might turn on when the vehicle is subject to strong shaking or large vibration, such as when the vehicle is on a turn table or a ship while the engine is running or steep slope such as bank. In this case, restart the engine on a normal road, and if the ABS warning lamp, ESP OFF indicator lamp, and SLIP indicator lamp turn off, there is no problem.

TCS Function

NLBR0164

- The wheel spin of the drive wheels is detected by the ABS actuator and electric unit (control unit) from the wheel speed signals from the four wheels, so if wheel spin occurs, the drive wheel right and left brake fluid pressure control and engine fuel cut are conducted while the throttle value is restricted to reduce the engine torque and decrease the amount of wheel spin. In addition, the degree the throttle is opened is controlled to achieve the optimum engine torque.
- Depending on road circumstances, the driver may have a sluggish feel. This is normal, because the optimum traction has the highest priority under TCS operation.
- TCS may be activated any time the vehicle suddenly accelerates, depressing accelerator peal fully, suddenly downshifts, upshifts, or is driven on a road with a varying surface friction coefficient.
- During TCS operation, it informs a driver of system operation by flashing SLIP indicator lamp.

ABS Function

NLBR0165

- The anti-lock brake system is a function that detects wheel revolution while braking, and it improves handling stability during sudden braking by electrically preventing 4 wheel lock. Maneuverability is also improved for avoiding obstacles.
- If the electrical system malfunctions, then fail-safe function is activated, ABS becomes inoperative, and ABS warning lamp turns on.
- Electrical system diagnosis by CONSULT-II is available.
- During ABS operation, brake pedal lightly vibrates and a mechanical noise may be heard. This is normal.
- Just after starting vehicle after ignition switch ON, brake pedal may vibrate or motor operating noise may be heard from engine room. This is a normal status of operation check.
- Stopping distance may be longer than that of vehicles without ABS when vehicle drives on rough, gravel, or snow-covered (fresh, deep snow) roads.

EBD Function

NLBR0166

- Electronic brake distributor is a function that detects subtle slippages between front and rear wheels during braking, and it improves handling stability by electronically controlling brake fluid pressure which results in reduced rear wheel slippage.
- In case of malfunction to the electrical system, fail-safe function is activated, EBD and ABS becomes inoperative, and ABS warning lamp and brake warning lamp are turned on.
- Electrical system diagnosis by CONSULT-II is available.
- During EBD operation, brake pedal lightly vibrates and a mechanical noise may be heard. This is normal.

- Just after starting vehicle after ignition switch ON, brake pedal may vibrate or motor operating noise may be heard from engine room. This is a normal status of operation check.
- Stopping distance may be longer than that of vehicles without EBD when vehicle drives on rough, gravel, or snow-covered (fresh, deep snow) roads.

Fail-safe Function

NLBR0167

ESP/TCS SYSTEM

NLBR0167S01

In case of malfunction to the throttle control system, the ESP OFF indicator lamp and SLIP indicator lamp are turned on, and the condition of the vehicle is the same as the condition of vehicles without ESP/TCS system. In case of malfunction to the throttle control system, the ABS control continues to operate normally without ESP/TCS control.

CAUTION:

If the fail-safe function is activated, then perform the self-diagnosis for ESP/TCS/ABS control system.

ABS, EBD SYSTEM

NLBR0167S02

In case of electrical malfunctions with the ABS, the ABS warning lamp, ESP OFF indicator lamp and SLIP indicator lamp will turn on. In case of electrical malfunction with the EBD, brake warning lamp, ABS warning lamp, ESP OFF indicator lamp and SLIP indicator lamp will turn on. Simultaneously, the ESP/TCS/ABS become one of the following conditions of the fail-safe function.

1. For ABS malfunction, only the EBD is activated and the condition of the vehicle is the same condition of vehicles without TCS/ABS system.
2. For EBD malfunction, the EBD and ABS become inoperative, and the condition of the vehicle is the same as the condition of vehicles without ESP/TCS/ABS, EBD system.

NOTE:

In condition 1 described above, an ABS self-diagnosis sound may be heard. That is a normal condition because a self-diagnosis for "Key Switch ON" and "the First Starting" are being performed.

Hydraulic Circuit Diagram

NLBR0168

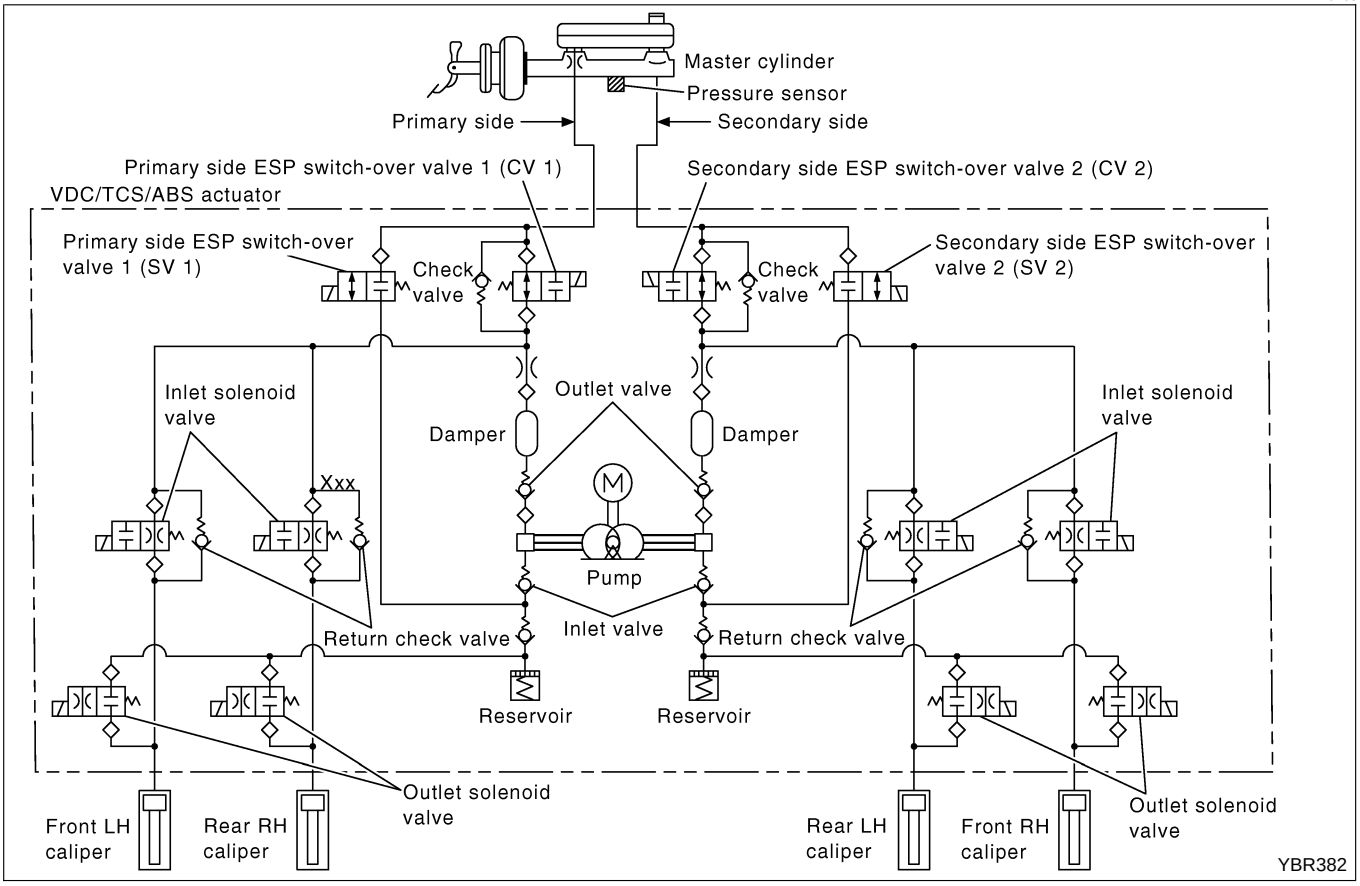

System Description

NLBR0224

CAN (Controller Area Network) is a serial communication line for real time application. It is an on-vehicle multiplex communication line with high data communication speed and excellent error detection ability. Many electronic control units are equipped onto a vehicle, and each control unit shares information and links with other control units during operation (not independent). In CAN communication, control units are connected with 2 communication lines (CAN H line, CAN L line) allowing a high rate of information transmission with less wiring. Each control unit transmits/receives data but selectively reads required data only.

CAN Communication Unit

NLBR0225

Body type	MPV					
Axle	2WD					
Engine	QG18DE		YD22	QG18DE		YD22
Transmission	A/T	M/T		A/T	M/T	
Brake control	ESP			ABS		
CAN communication unit						
ECM	×	×	×	×	×	×
TCM	×			×		
ABS actuator and electric unit (control unit)				×	×	×
ESP/TCS/ABS control unit	×	×	×			
Steering angle sensor	×	×	×			
Smart entrance control unit	×	×	×	×	×	×
Data link connector	×	×	×	×	×	×
Combination meter	×	×	×	×	×	×
CAN communication type	Type 1 (BR-90)	Type 2/Type 3 (BR-92)		Type 4 (BR-94)	Type 5/Type 6 (BR-96)	

×: Applicable

TYPE 1

=NLBR0225S01

System Diagram

NLBR0225S0101

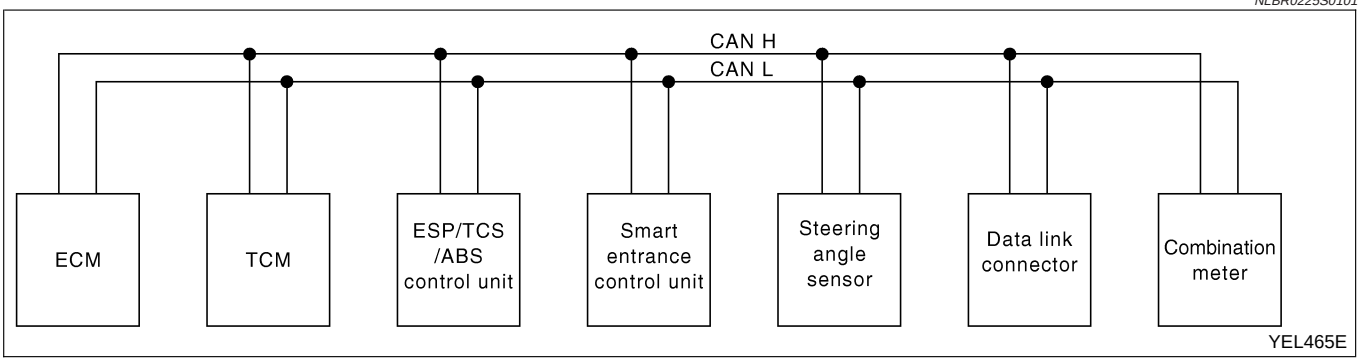

Input/Output Signal Chart

NLBR0225S0102

T: Transmit R: Receive

Signals	ECM	TCM	ESP/TCS/ABS control unit	Smart entrance control unit	Steering angle sensor	Combination meter
Engine speed signal	T		R			R
Brake switch signal		R				T
Rear window defogger signal	R			T		
Heater fan switch signal	R					T
Air conditioner switch signal	R					T
MI signal	T					R
Engine coolant temperature signal	T					R
Fuel consumption signal	T					R
Vehicle speed signal			T			R
	R					T
Seat belt reminder signal				R		T
Headlamp switch signal				T		R
Flashing indicator signal				T		R
Cooling fan speed signal	T			R		
Door switches state signal				T		R
A/C compressor signal	T			R		
A/C compressor feedback signal	T					R

Signals	ECM	TCM	ESP/TCS/ABS control unit	Smart entrance control unit	Steering angle sensor	Combination meter
Accelerator pedal position signal	T		R			
Output shaft revolution signal	R	T				
OD OFF switch signal		R				T
OD OFF indicator signal		T				R
A/T self-diagnosis signal	R	T				
P position signal		T	R			
Steering angle sensor signal			R		T	
A/T position indicator signal	R	T	R			R
ABS warning lamp signal			T			R
Slip indicator lamp signal			T			R
VDC OFF indicator lamp signal			T			R
Brake warning lamp signal			T			R
N position switch signal		R				T
P position switch signal		R				T

TYPE 2/TYPE 3
System Diagram

=NLBR0225S02

NLBR0225S0201

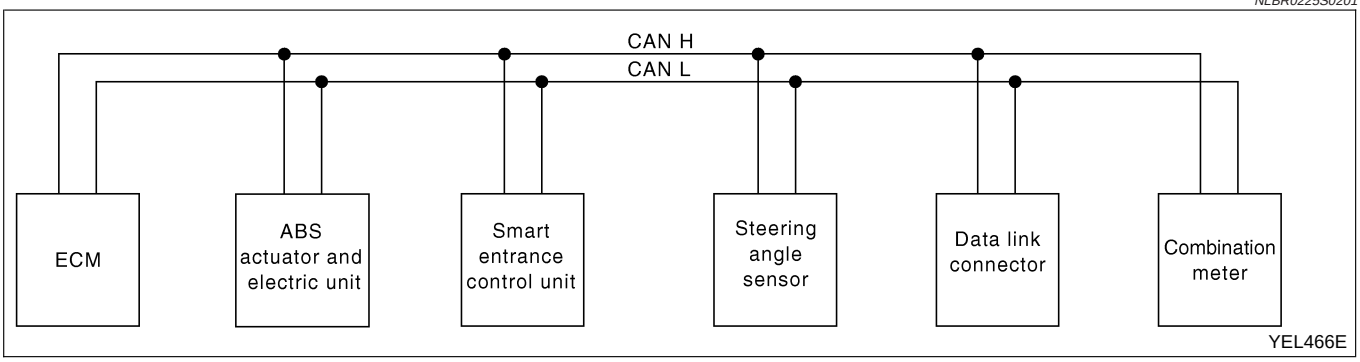

Input/Output Signal Chart

NLBR0225S0202

T: Transmit R: Receive

Signals	ECM	ESP/TCS/ABS control unit	Smart entrance control unit	Steering angle sensor	Combination meter
Engine speed signal	T	R			R
Rear window defogger signal*1	R		T		
Heater fan switch signal*1	R				T
Air conditioner switch signal	R				T
MI signal	T				R
Glow indicator lamp signal*2	T				R
Engine coolant temperature signal	T				R
Fuel consumption signal	T				R
Vehicle speed signal		T			R
	R				T
Seat belt reminder signal			R		T
Headlamp switch signal			T		R
Flashing indicator signal			T		R
Cooling fan speed signal	T		R		
Door switches state signal			T		R
A/C compressor signal	T		R		
A/C compressor feedback signal*1	T				R
Accelerator pedal position signal	T	R			

Signals	ECM	ESP/TCS/ABS control unit	Smart entrance control unit	Steering angle sensor	Combination meter
Steering angle sensor signal		R		T	
ABS warning lamp signal		T			R
Slip indicator lamp signal		T			R
VDC OFF indicator lamp signal		T			R
Brake warning lamp signal		T			R

*1: For QG engine models
*2: For YD engine models

TYPE 4

=NLBR0225S03

System Diagram

NLBR0225S0301

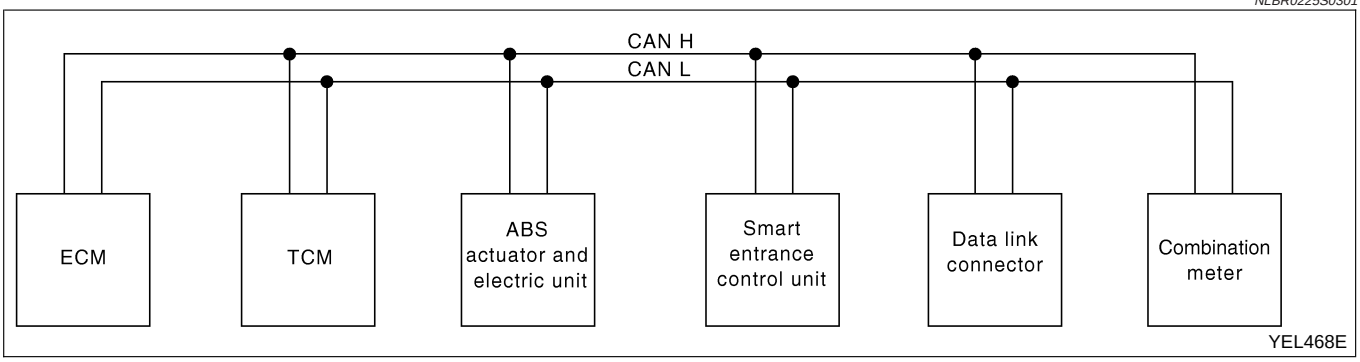

Input/Output Signal Chart

NLBR0225S0302

T: Transmit R: Receive

Signals	ECM	TCM	ABS actuator and electric unit (control unit)	Smart entrance control unit	Combination meter
Engine speed signal	T				R
Brake switch signal		R			T
Rear window defogger signal	R			T	
Heater fan switch signal	R				T
Air conditioner switch signal	R				T
MI signal	T				R
Engine coolant temperature signal	T				R
Fuel consumption signal	T				R
Vehicle speed signal			T		R
	R				T
Seat belt reminder signal				R	T
Headlamp switch signal				T	R
Flashing indicator signal				T	R
Engine cooling fan speed signal	T			R	
Door switches state signal				T	R
A/C compressor signal	T			R	
A/C compressor feedback signal	T				R
Accelerator pedal position signal	T	R			

Signals	ECM	TCM	ABS actuator and electric unit (control unit)	Smart entrance control unit	Combination meter
Output shaft revolution signal	R	T			
ABS operation signal			T		R
OD OFF switch signal		R			T
OD OFF indicator signal		T			R
A/T self-diagnosis signal	R	T			
ABS warning lamp signal			T		R
N position switch signal		R			T
P position switch signal		R			T

TYPE 5/TYPE 6
System Diagram

=NLBR0225S04

NLBR0225S0401

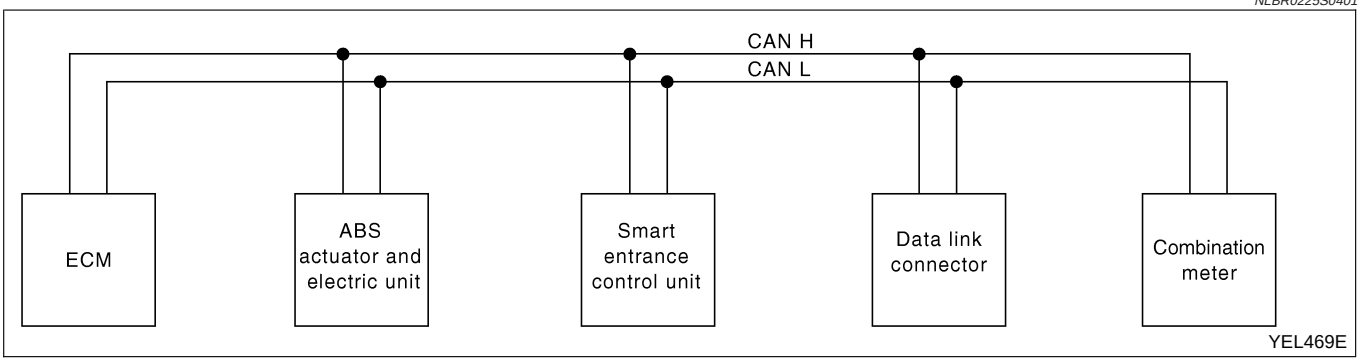

Input/Output Signal Chart

NLBR0225S0402

T: Transmit R: Receive

Signals	ECM	ABS actuator and electric unit (control unit)	Smart entrance control unit	Combination meter
Engine speed signal	T			R
Rear window defogger signal*1	R		T	
Heater fan switch signal*1	R			T
Air conditioner switch signal	R			T
MI signal	T			R
Glow indicator lamp signal*2	T			R
Engine coolant temperature signal	T			R
Fuel consumption signal	T			R
Vehicle speed signal		T		R
	R			T
Seat belt reminder signal			R	T
Headlamp switch signal			T	R
Flashing indicator signal			T	R
Cooling fan speed signal	T		R	
Door switches state signal			T	R
A/C compressor signal	T		R	
A/C compressor feedback signal*1	T			R
ABS operation signal		T		R
ABS warning lamp signal		T		R

*1: For QG engine models
*2: For YD engine models

How to Perform Trouble Diagnosis for Quick and Accurate Repair

NLBR0172

INTRODUCTION

NLBR0172S01

- Most important point to perform diagnosis is to understand systems (control and mechanism) in vehicle thoroughly.

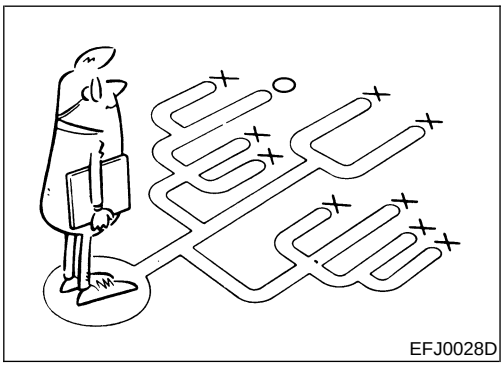
EFJ0028D

- It is also important to clarify customer complaints before inspection.
  First of all, reproduce symptom, and understand it fully.
  Ask customer about his/her complaints carefully. In some cases, it will be necessary to check symptom by driving vehicle with customer.

NOTE:
Customers are not professionals. Do not assume “maybe customer means...” or “maybe customer mentioned this symptom”.

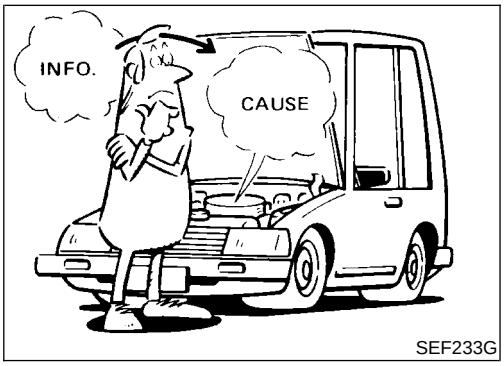

SEF233G

- It is essential to check symptoms right from beginning in order to repair a malfunction completely.
  For an intermittent malfunction, it is important to reproduce symptom based on interview with customer and past examples. Do not perform inspection on ad hoc basis. Most intermittent malfunctions are caused by poor contacts. In this case, it will be effective to shake suspected harness or connector by hand. When repairs are performed without any symptom check, no one can judge if malfunction has actually been eliminated.
- After diagnosis, make sure to perform “erase memory”. Refer to GI-35.
- For an intermittent malfunction, move harness or harness connector by hand to check poor contact or improper open circuit.
- Always read “GI General Information” to confirm general precautions. Refer to GI-3.

DIAGNOSIS FLOWCHART

NLBR0172S02

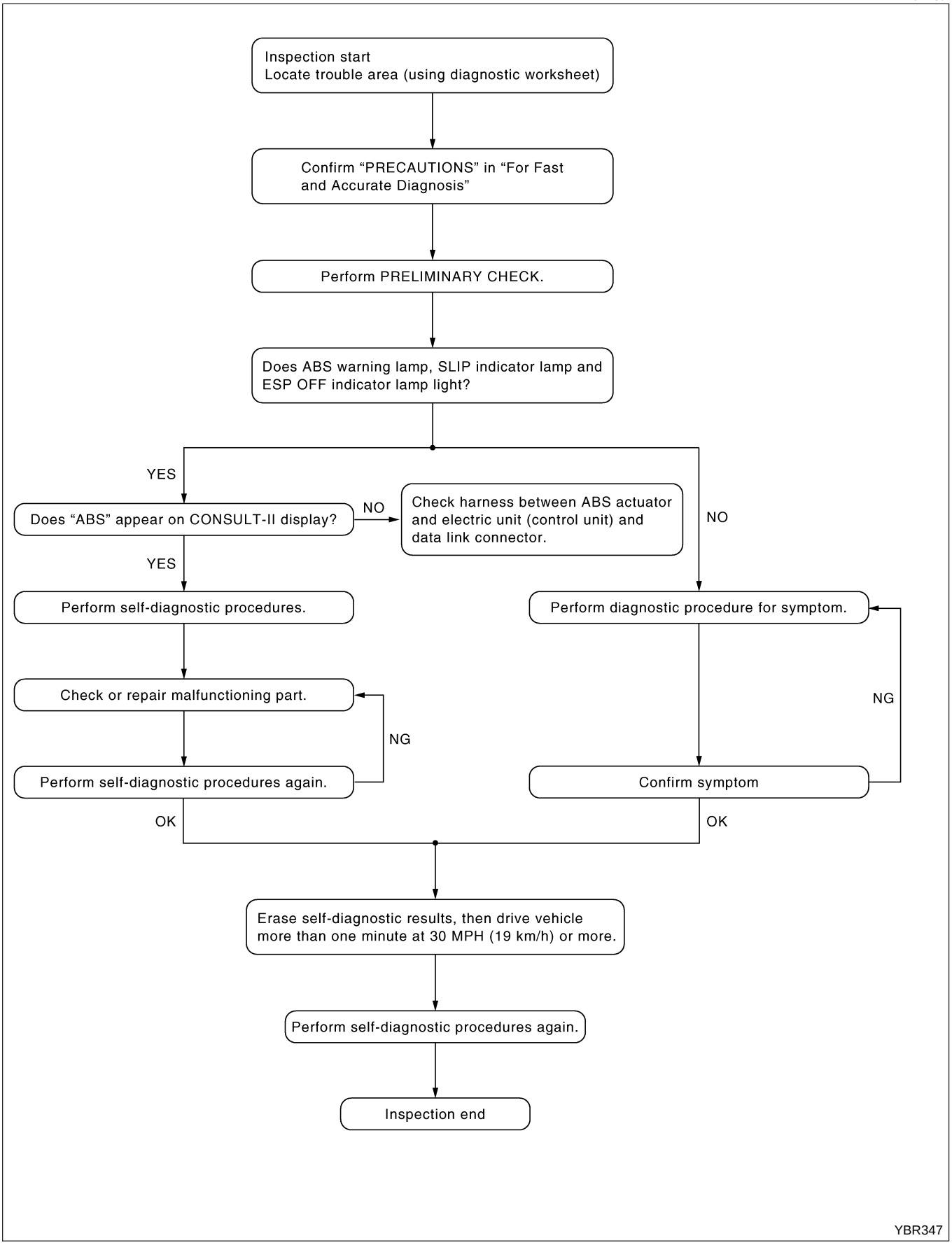

KEY POINTS

WHAT ..... Vehicle model
WHEN ..... Date, Frequencies
WHERE ..... Road conditions
HOW ..... Operating conditions, Weather conditions, Symptoms

SBR339B

ASKING COMPLAINTS

NLBR0172S03

- Complaints against malfunction vary depending on each person. It is important to clarify customer complaints.
- Ask customer about what symptoms are present and under what conditions. Use information to reproduce symptom while driving.
- It is also important to use the diagnosis sheet so as not to miss information.

EXAMPLE OF DIAGNOSIS SHEET

NLBR0172S04

Customer name MR/MS	Model & Year		VIN
Engine #	Trans.		Mileage
Incident Date	Manuf. Date		In Service Date
Symptoms	☐ Noise and vibration (from engine compartment) ☐ Noise and vibration (from axle)	☐ Warning / Indicator activate	☐ Firm pedal operation Large stroke pedal operation
	☐ ABS does not work (Wheels lock when braking)	☐ ABS does not work (wheels slip when braking)	☐ Lack of sense of acceleration
Engine conditions	☐ When starting ☐ After starting		
Road conditions	☐ Low friction road (☐Snow ☐Gravel ☐Other) ☐ Bumps / potholes		
Driving conditions	☐ Full-acceleration ☐ High speed cornering ☐ Vehicle speed: Greater than 10 km/h (6 MPH) ☐ Vehicle speed: 10 km/h (6 MPH) or less ☐ Vehicle is stopped		
Applying brake conditions	☐ Suddenly ☐ Gradually		
Other conditions	☐ Operation of electrical equipment ☐ Shift change ☐ Other descriptions		

LFIA0176E

Component Parts Location

NLBR0173

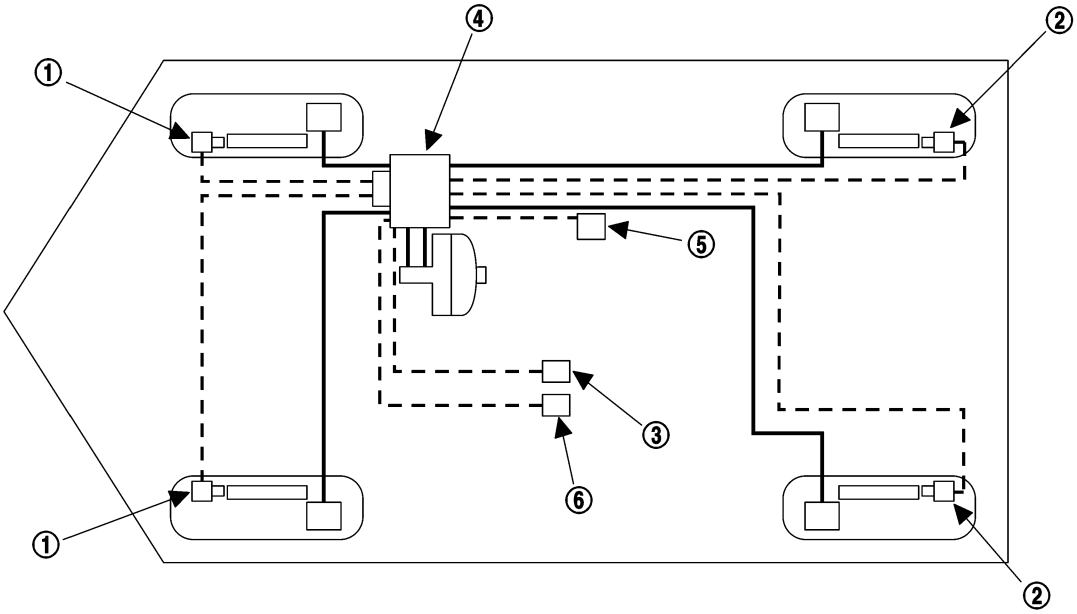

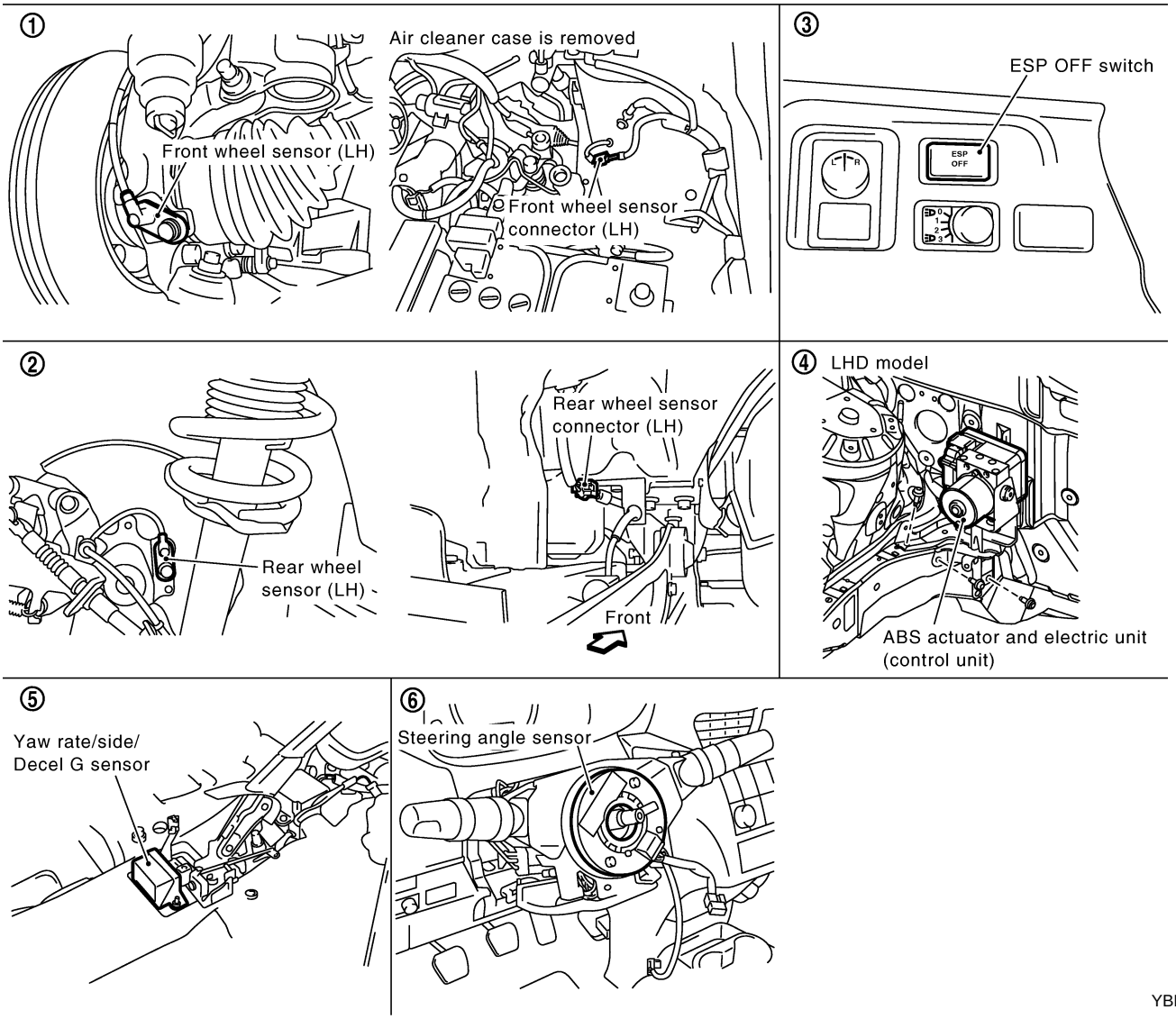

YBR356

Schematic

NLBR0174

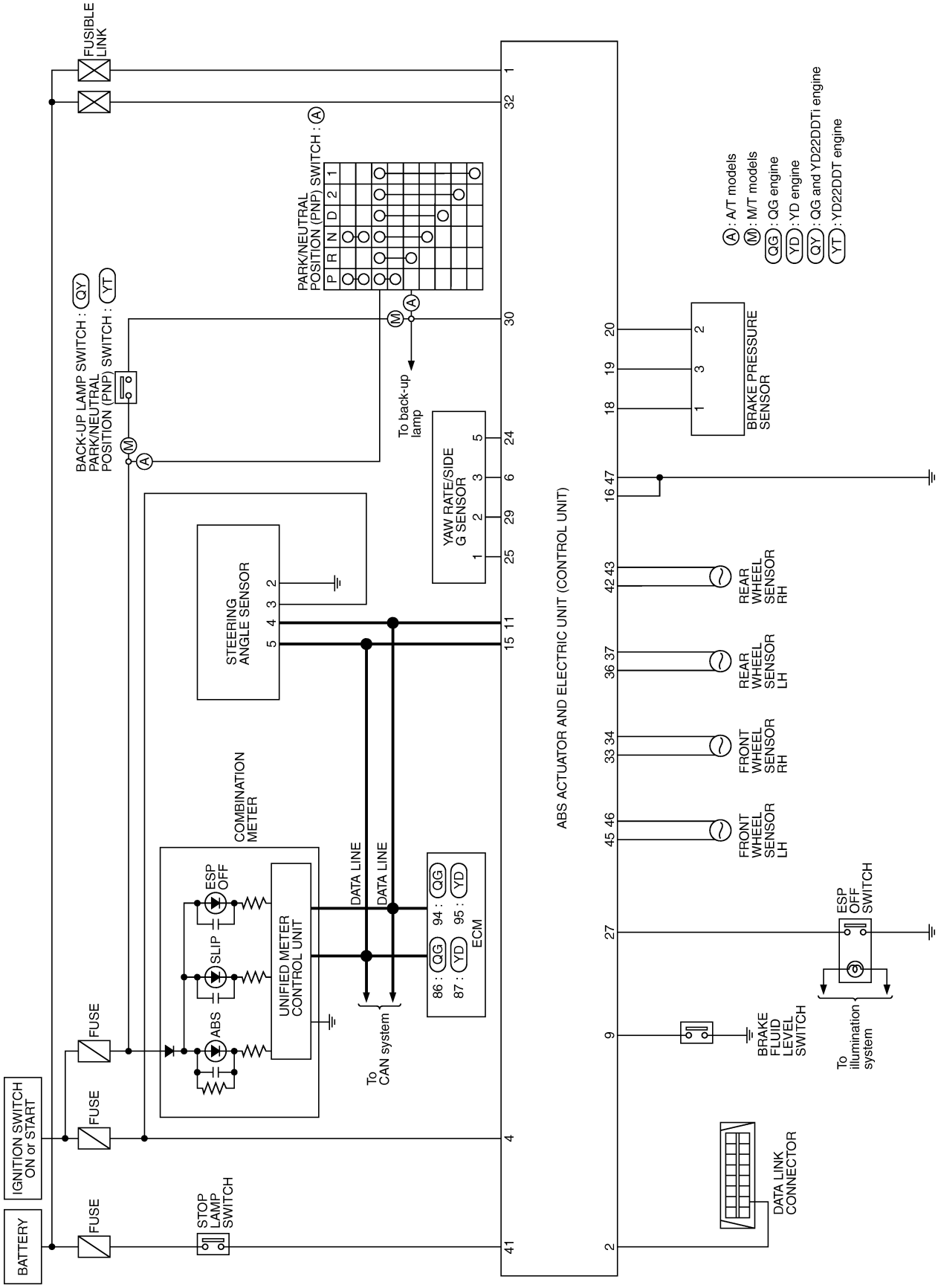

YBR331A

Wiring Diagram — ESP/TCS/ABS —

NLBR0175

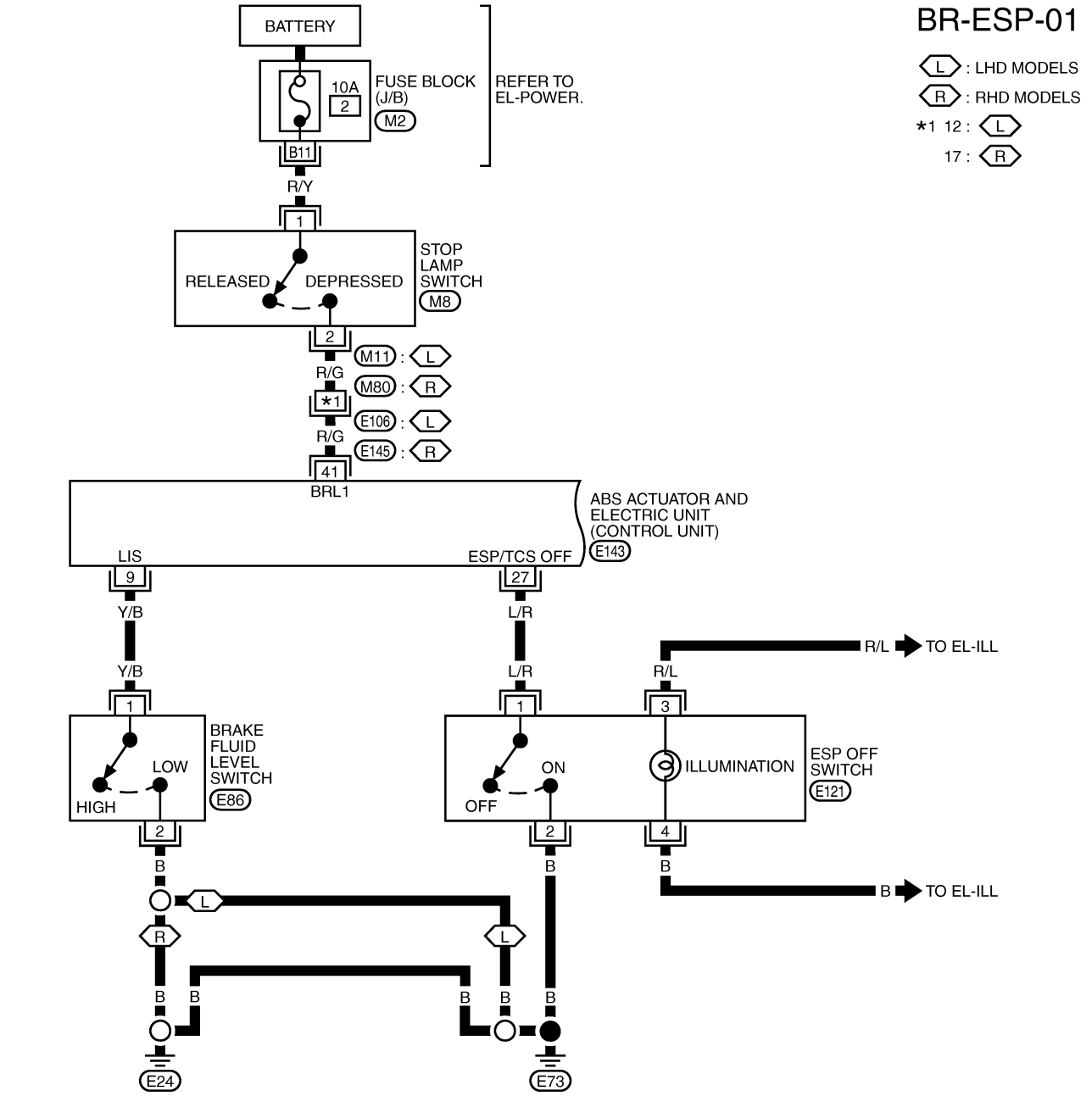

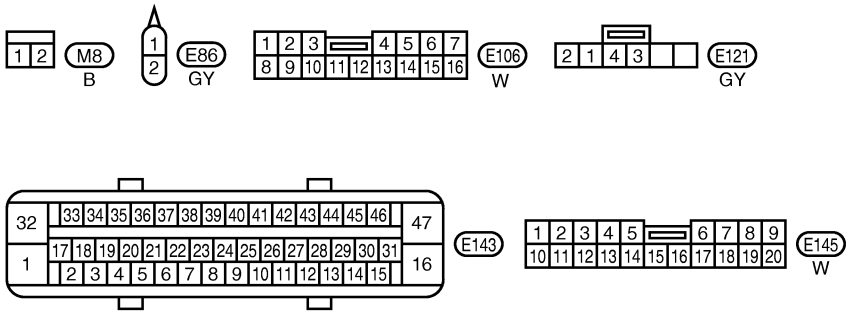

REFER TO THE FOLLOWING.
M2 -FUSE BLOCK-JUNCTION BOX (J/B)

YBR332A

BR-ESP-02

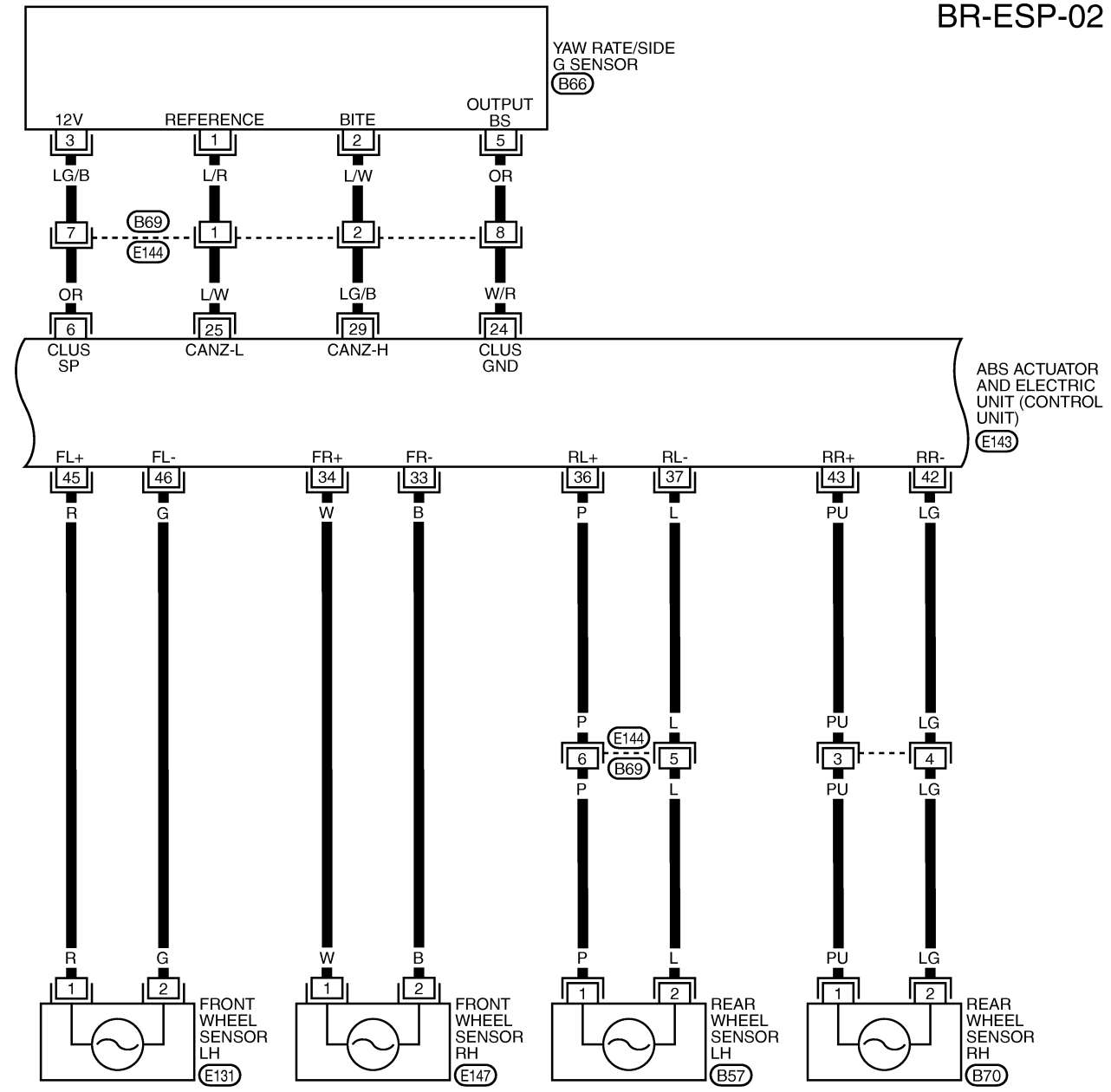

YBR333A

Wiring Diagram — ESP/TCS/ABS — (Cont'd)

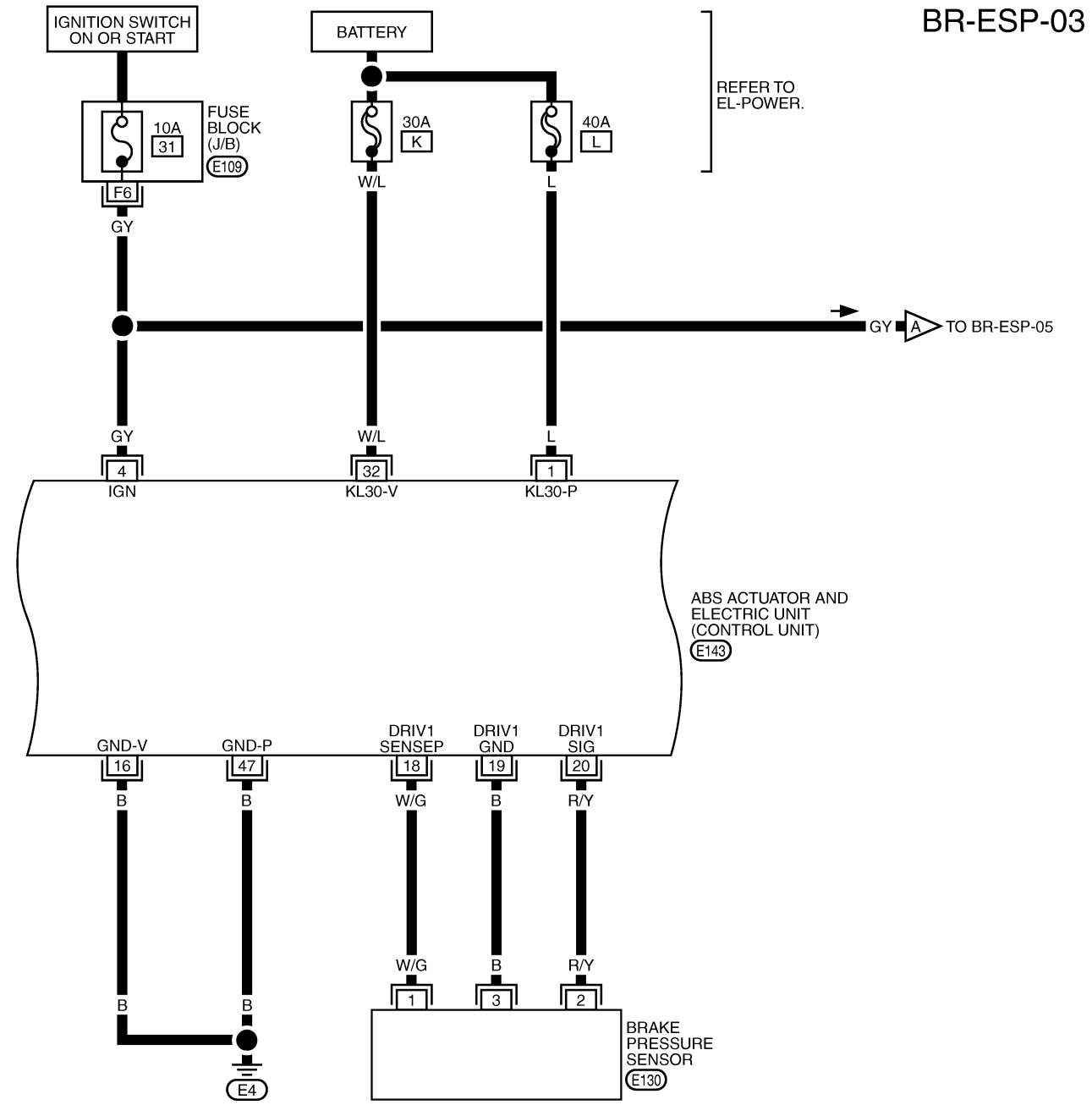

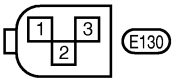

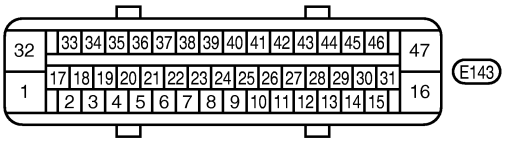

REFER TO THE FOLLOWING.
E109 -FUSE BLOCK-JUNCTION BOX (J/B)

YBR334A

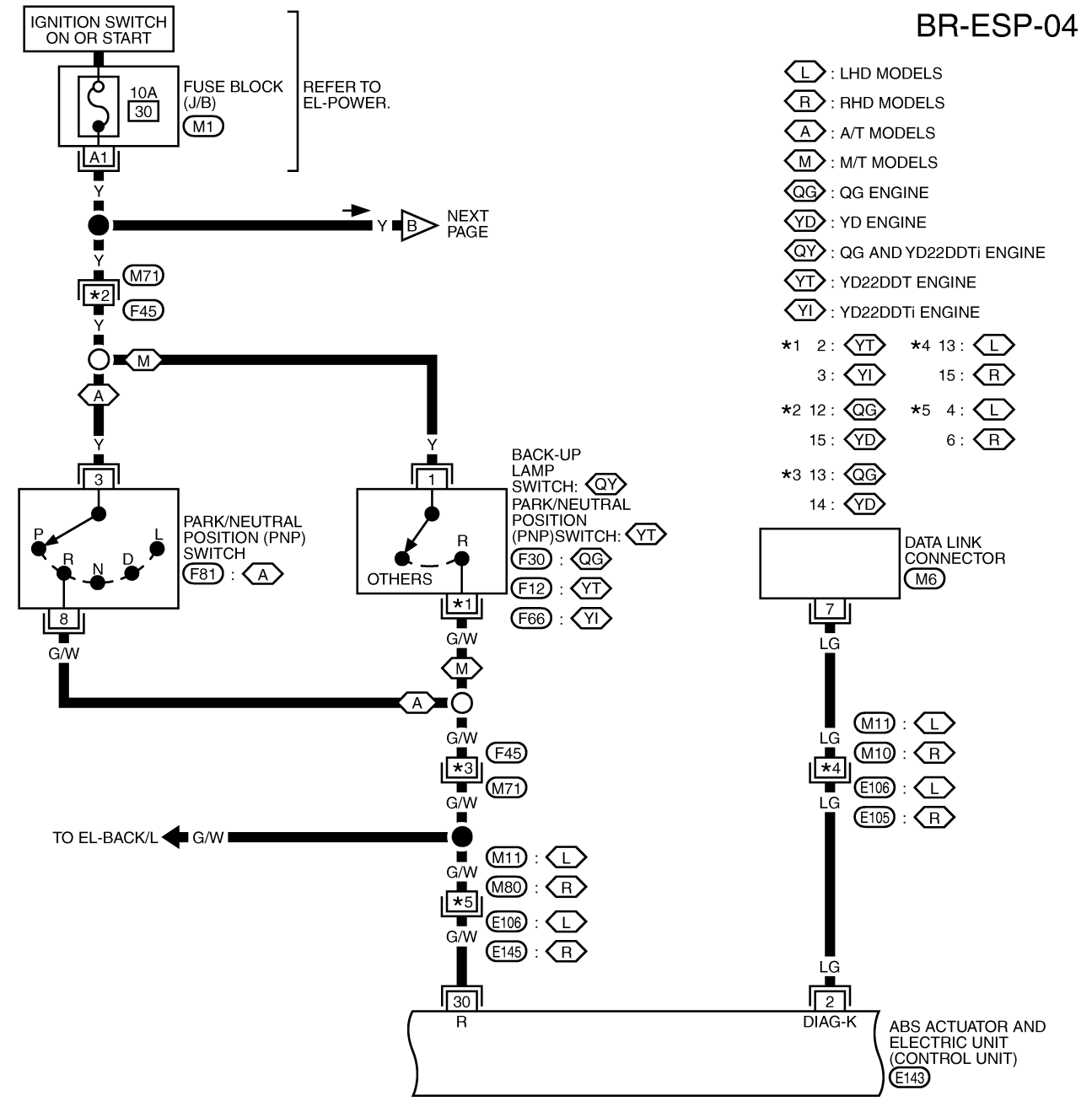
BR-ESP-04
IGNITION SWITCH ON OR START
10A
30
FUSE BLOCK (J/B)
M1
REFER TO EL-POWER.
A1
Y
NEXT PAGE
M71
*2
F45
M
A
3
PARK/NEUTRAL POSITION (PNP) SWITCH
F81 : A
P
R
N
D
L
8
G/W
1
BACK-UP LAMP SWITCH: QY
PARK/NEUTRAL POSITION (PNP)SWITCH: YT
F30 : QG
F12 : YT
F66 : YI
OTHERS
*1
*3
*5
TO EL-BACK/L
M11 : L
M80 : R
E106 : L
E145 : R
30
R
2
DIAG-K
ABS ACTUATOR AND ELECTRIC UNIT (CONTROL UNIT)
E143
L : LHD MODELS
R : RHD MODELS
A : A/T MODELS
M : M/T MODELS
QG : QG ENGINE
YD : YD ENGINE
QY : QG AND YD22DDTi ENGINE
YT : YD22DDT ENGINE
YI : YD22DDTi ENGINE
*1 2 : YT
3 : YI
*2 12 : QG
15 : YD
*3 13 : QG
14 : YD
*4 13 : L
15 : R
*5 4 : L
6 : R
DATA LINK CONNECTOR
M6
7
LG
M11 : L
M10 : R
E106 : L
E105 : R
*4
M6
W
M71 , E105
W W
E106
W
E145
W
F12
W
F30 , F66
B B
F81
B
E143
REFER TO THE FOLLOWING.
M1 -FUSE BLOCK-JUNCTION BOX (J/B)

YBR335A

Wiring Diagram — ESP/TCS/ABS — (Cont'd)

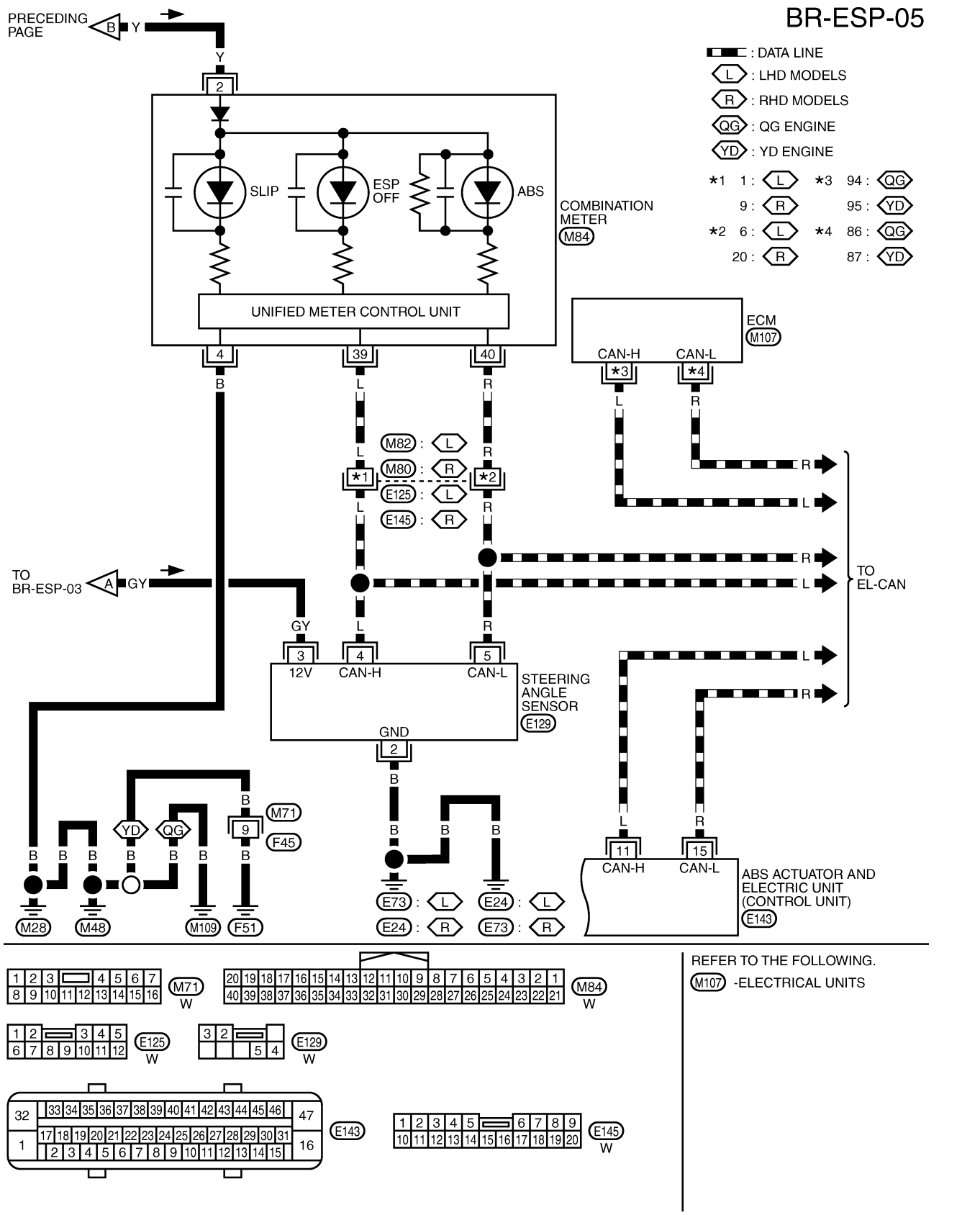

Control Unit Input/Output Signal Standard

NLBR0176

REFERENCE VALUE FROM CONSULT-II

NLBR0176S01

CAUTION:

The display shows the control unit calculation data, so a normal value might be displayed even in the event the output circuit (harness) is open or short-circuited.

Monitor item	Display content	Data monitor		Error inspection checklist
		Condition	Reference value in normal operation	
SLCT LVR POSI	Select shift position	A/T shift position = P, R, D, L, N position	Display selected shift position one of P, R, D, L, and N.	—
		S position	##	
N POSI SIG	—	—	—	—
P POSI SIG	—	—	—	—
FR RH SENSOR FR LH SENSOR RR RH SENSOR RR LH SENSOR	Wheel speed	Vehicle stopped	0 [km/h (MPH)]	BR-123
		Vehicle running (Note 1)	Almost in accordance with speedometer display (within ± 10%)	
ACCEL POS SIG	Open/close condition of throttle valve (linked with accelerator pedal).	Accelerator pedal not depressed (ignition switch is ON)	0%	Communication circuit between ABS actuator and electric unit (control unit) and ECM
		Depress accelerator pedal (ignition switch is ON)	0 - 100%	
ENGINE SPEED	With engine running	With engine stopped	0 rpm	BR-126
		Engine running	Almost in accordance with tachometer display	
STR ANGLE SIG	Steering angle detected by steering angle sensor	Straight-ahead	Approx. 0 deg	BR-129
		Steering wheel turned	–756 - 756 deg	
YAW RATE SEN	Yaw rate detected by yaw rate/side G sensor	Vehicle stopped	Approx. 0 d/s	BR-130
		Vehicle running	–100 - 100 d/s	
Gear	Determined gear shift position from the A/T PNP switch signal	Always	1 (M/T vehicles normally remain at 1)	—
SIDE G-SENSOR	Transverse G detected by yaw rate/side G sensor	Vehicle stopped	Approx. 0 m/s^2	BR-130
		Vehicle running	–16.7 - 16.7 m/s^2	
PRESS SENSOR	Brake fluid pressure detected by pressure sensor	With ignition switch turned ON and brake pedal released	Approx. 0 bar	BR-127
		With ignition switch turned ON and brake pedal depressed	–0 - 170 bar	
BATTERY VOLT	Battery voltage supplied to ABS actuator and electric unit (control unit)	Ignition switch ON	10 - 16V	BR-136

Control Unit Input/Output Signal Standard (Cont'd)

Monitor item	Display content	Data monitor		Error inspection checklist
		Condition	Reference value in normal operation	
STOP LAMP SW	Brake pedal operation	Brake pedal depressed	ON	BR-138
		Brake pedal not depressed	OFF	
OFF SW	ESP OFF switch ON/OFF status	ESP OFF switch ON (When ESP OFF indicator lamp is ON)	ON	BR-142
		ESP OFF switch OFF (When ESP OFF indicator lamp is OFF)	OFF	
ABS WARN LAMP	ABS warning lamp ON condition (Note 2)	ABS warning lamp ON	ON	BR-122
		ABS warning lamp OFF	OFF	
MOTOR RELAY	Operation status of motor and motor relay	Ignition switch ON or engine running (ABS not operated)	OFF	BR-134
		Ignition switch ON or engine running (ABS operated)	ON	
ACTUATOR RLY	Actuator relay operation status	Vehicle stopped (Ignition switch ON)	OFF	BR-134
		Vehicle stopped (Engine running)	ON	
OFF LAMP	ESP OFF indicator lamp status (Note 3)	When ESP OFF indicator lamp is ON	ON	BR-142
		When ESP OFF indicator lamp is OFF	OFF	
SLIP LAMP	SLIP indicator lamp status (Note 4)	When SLIP indicator lamp is ON	ON	BR-122
		When SLIP indicator lamp is blinking		
		When SLIP indicator lamp is OFF	OFF	
FR LH IN SOL FR LH OUT SOL FR RH IN SOL FR RH OUT SOL RR RH IN SOL RR RH OUT SOL RR LH IN SOL RR LH OUT SOL	Solenoid valve operation	Actuator (solenoid) is active ("ACTIVE TEST" with CONSULT-II) or actuator relay is inactive (in fail-safe mode).	ON	BR-132
		When actuator (solenoid) is not active and actuator relay is active (ignition switch ON).	OFF	
CV1 CV2 SV1 SV2	ESP/TCS switch-over valve status	When actuator (switch-over valve) is active ("ACTIVE TEST" with CONSULT-II) or actuator relay is inactive (when in fail-safe mode).	ON	
		When actuator (switch-over valve) is not active and actuator relay is active (ignition switch ON).	OFF	

Monitor item	Display content	Data monitor		Error inspection checklist
		Condition	Reference value in normal operation	
FLUID LEV SW	ON/OFF status of brake fluid level switch	When brake fluid level switch ON	ON	BR-139
		When brake fluid level switch OFF	OFF	
ESP FAIL SIG TCS FAIL SIG ABS FAIL SIG EBD FAIL SIG	Fail signal status	ESP fail TCS fail ABS fail EBD fail	ON	ESP system TCS system ABS system EBD system
		ESP normal TCS normal ABS normal EBD normal	OFF	
EBD WARN LAMP	Brake warning lamp on condition (Note 5)	Brake warning lamp ON	ON	BR-122
		Brake warning lamp OFF	OFF	
EBD SIGNAL	EBD operation	EBD active	ON	–
		EBD not active	OFF	
ABS SIGNAL	ABS operation	ABS active	ON	
		ABS not active	OFF	
TCS SIGNAL	TCS operation	TCS active	ON	
		TCS not active	OFF	
ESP SIGNAL	ESP operation	ESP active	ON	
		ESP not active	OFF	
CRANKING SIG	CRANKING status	Cranking	ON	
		Not cranking	OFF	
CAN COMM	CAN communications condition	CAN communication normal	OK	BR-140
		CAN communication error	NG	
CAN CIRC 1	CAN communications condition	CAN communication normal	OK	
		CAN communication error	UNKWN	
CAN CIRC 2	CAN communications condition	CAN communication normal	OK	
		CAN communication error	UNKWN	
CAN CIRC 3	CAN communications condition	CAN communication normal	UNKWN	
		CAN communication error		
CAN CIRC 4	CAN communications condition	CAN communication normal	UNKWN	
		CAN communication error		
CAN CIRC 5	CAN communications condition	CAN communication normal	OK	
		CAN communication error	UNKWN	
CAN CIRC 6	CAN communications condition	CAN communication normal	UNKWN	
		CAN communication error		
CAN CIRC 7	CAN communications condition	CAN communication normal	UNKWN	
		CAN communication error		

Note 1: Confirm tire pressure is normal.

Note 2: ON/OFF timing of ABS warning lamp

ON: For approximately 2 seconds after ignition switch is turned ON, or when a malfunction is detected.

OFF: Approximately 2 seconds after ignition switch is turned ON (when system is in normal operation) condition by ESP.

Note 3: ON/OFF timing of ESP OFF indicator lamp

ON: For approximately 2 seconds after ignition switch is turned ON, or when a malfunction is detected and ESP OFF switch is ON.

OFF: Approximately 2 seconds after ignition switch is turned ON (when system is in normal operation.) And when ESP OFF switch is OFF.

Note 4: SLIP indicator lamp ON/OFF timing

ON: For approximately 2 seconds after ignition switch is turned ON, or when a malfunction is detected.

OFF: Approximately 2 seconds after ignition switch is turned ON (when system is in normal operation) and ESP/TCS function is not activated.

Blinking: ESP/TCS function is active during driving

Note 5: Serves as EBD warning lamp.

CONSULT-II Functions

NLBR0177

CAUTION:

- **Do not use the "function test" for diagnosis. For more information, refer to the separate volume "CONSULT-II OPERATION MANUAL (Function Test)".**
- **When the CONSULT-II is connected and communicating, ABS warning lamp, SLIP indicator lamp, and ESP OFF indicator lamp turn on, and when the communication is interrupted, the lamps will turn off after approximately 2 to 3 sec.**
- **When self-diagnosis, data monitor, or active test functions are being executed, EBD, ABS, TCS, and ESP control is not conducted.**
- **When using CONSULT-II to conduct ABS actuator and electric unit (control unit) self-diagnosis, active test, work support, etc., first stop engine, connect the CONSULT-II, and select "ABS".**
- **When CONSULT-II is used, ABS warning lamp, ESP OFF indicator lamp, SLIP indicator lamp may be turned ON/OFF.**
- **When an error is shown by the CONSULT-II SELF-DIAG RESULTS and CONSULT-II is used to conduct an active test, an engine system malfunction may be shown, but restarting engine will return the status to normal.**

CONSULT-II FUNCTION APPLICATION TABLE (MAIN ITEMS)

NLBR0177S01

Item	Self-diagnosis	Data monitor	Active test
Wheel sensors	×	×	–
Stop lamp switch	×	×	–
Solenoid valves	×	×	×
Switch-over solenoid valves	×	×	–

Item	Self-diagnosis	Data monitor	Active test
Yaw rate/side G sensor	×	×	–
Pressure sensor	×	×	–
Steering angle sensor	×	×	–
ABS actuator relay	×	×	–
ABS motor relay	×	×	–
ABS warning lamp	–	×	–
Battery voltage	×	×	–
ABS actuator and electric unit (control unit)	×	–	–
ABS actuator motor	×	×	×
CAN communication	×	×	–
Engine speed signal	–	×	–
ESP OFF switch	–	×	–
ESP OFF indicator lamp	–	×	–
SLIP indicator lamp	–	×	–
Accelerator pedal position signal	–	×	–
Selector lever position	–	×	–
EBD/ABS/TCS/ESP signals	×	×	–
Brake fluid level switch	×	×	–
Engine signals	×	–	–
Brake warning lamp (Note)	–	×	–

×: Applicable
–: Not applicable
Note: Serves as EBD warning lamp.

CONSULT-II BASIC OPERATION PROCEDURE

NLBR0177S02

1. Turn ignition switch OFF.

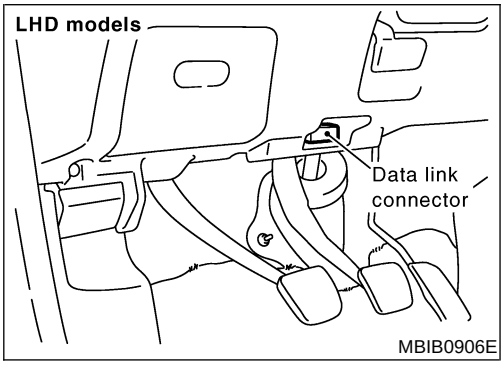

2. Connect CONSULT-II and CONSULT-II CONVERTER to the data link connector.

CAUTION:
If CONSULT-II is used with no connection of CONSULT-II CONVERTER, malfunctions might be detected in self-diagnosis depending on control unit which carry out CAN communication.

3. Turn ignition switch ON.

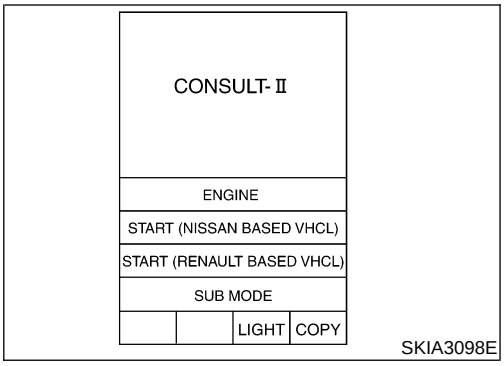

4. Touch "START (NISSAN BASED VHCL)".

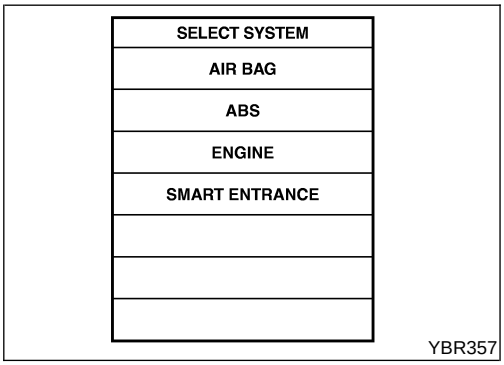

5. Touch "ABS" in the "SELECT SYSTEM" screen.
   If "ABS" is not indicated, go to GI-35.

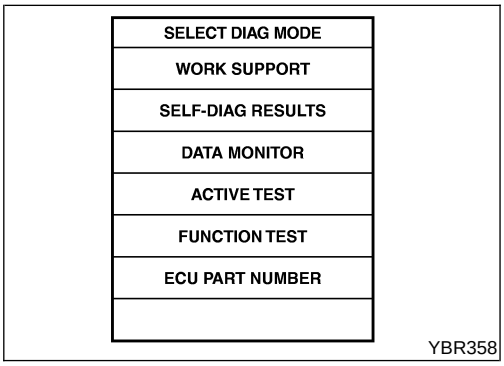

6. Select the required diagnostic location from the "SELECT DIAG MODE" screen.
   For further information, see the CONSULT-II Operation Manual.

SELF-DIAGNOSIS

NLBR0177S03

Description

NLBR0177S0301

If an error is detected in the system, ABS warning lamp, ESP OFF indicator lamp, SLIP indicator lamp on the combination meter turn on. In this case, perform self-diagnosis as follows.

Operation Procedure

NLBR0177S0302

1. Turn ignition switch OFF.
2. Connect CONSULT-II and CONSULT-II CONVERTER to the data link connector.

CAUTION:

If CONSULT-II is used with no connection of CONSULT-II CONVERTER, malfunctions might be detected in self-diagnosis depending on control unit which carry out CAN communication.

3. Turn ignition switch ON.
4. Start engine and drive vehicle at approximately 30 km/h (19 MPH) for approximately 1 minute.
5. After stopping the vehicle, with engine running at idle speed, touch "START (NISSAN BASED VHCL)", "ABS", "SELF-DIAG RESULTS" in order on the CONSULT-II screen.
   If "ABS" is not indicated, go to GI-35.

CAUTION:

- **If there is no error during CONSULT-II use, ABS warning lamp, ESP OFF indicator lamp, SLIP indicator lamp may be turned ON/OFF.**
- **If "START (NISSAN BASED VHCL)" is touched immediately after starting engine or turning on ignition switch, "ABS" might not be displayed in the "SELECT SYSTEM" screen. In this case, repeat the operation from step 1. If it**

cannot be shown after several attempts, ABS actuator and electric unit (control unit) may have malfunction. Repair or replace control unit.

6. The self-diagnostic results are displayed. (If necessary, the self-diagnostic results can be printed out by touching "PRINT".)

- When "NO FAILURE" is displayed, check ABS warning lamp, ESP OFF indicator lamp, and SLIP indicator lamp.

7. Perform the appropriate inspection from the display item list, and repair or replace the malfunctioning component.
8. Start engine and drive vehicle at approximately 30 km/h (19 MPH) for approximately 1 minute.

CAUTION:

- **When a wheel sensor "short-circuit" is detected, if the vehicle is not driven at 30 km/h (19 MPH) for at least 1 minute, ABS warning lamp will not turn off even if everything is normal.**
- **Check again to make sure that there is no malfunction on other parts.**

9. Turn ignition switch OFF to prepare for erasing the memory.
10. Start engine and touch "START (NISSAN BASED VHCL)", "ABS", "SELF-DIAG RESULTS", "ERASE MEMORY" in order on the CONSULT-II screen to erase the error memory.

CAUTION:

If the error memory is not erased, perform the operation from step 5 again.

11. For the final inspection, drive at approximately 30 km/h (19 MPH) for approximately 1 minute and confirm that ABS warning lamp, ESP OFF indicator lamp, and SLIP indicator lamp are OFF.

Display Item List

NLBR0177S0303

Self-diagnostic item	Malfunction detecting condition	Check system
FR LH SENSOR-1 [C1104]	Circuit of front LH wheel sensor is open or sensor power voltage is unusual.	BR-123 (Note 1)
RR RH SENSOR-1 [C1101	Circuit of rear RH wheel sensor is open or sensor power voltage is unusual.	
FR RH SENSOR-1 [C1103]	Circuit of front RH wheel sensor is open or sensor power voltage is unusual.	
RR LH SENSOR-1 [C1102]	Circuit of rear LH wheel sensor is open or sensor power voltage is unusual.	
FR LH SENSOR-2 [C1108]	ABS actuator and electric unit (control unit) cannot identify sensor pulses, because of large gap between wheel sensor and sensor rotor.	
RR RH SENSOR-2 [C1105]	ABS actuator and electric unit (control unit) cannot identify sensor pulses, because of large gap between wheel sensor and sensor rotor.	
FR RH SENSOR-2 [C1107]	ABS actuator and electric unit (control unit) cannot identify sensor pulses, because of large gap between wheel sensor and sensor rotor.	
RR LH SENSOR-2 [C1106]	ABS actuator and electric unit (control unit) cannot identify sensor pulses, because of large gap between wheel sensor and sensor rotor.	
STOP LAMP SW [C1116]	Stop lamp switch circuit is open or shorted.	BR-138

CONSULT-II Functions (Cont'd)

Self-diagnostic item	Malfunction detecting condition	Check system
PRESS SEN CIRCUIT [C1142]	Pressure sensor signal line is open or shorted, sensor power voltage is unusual, or pressure sensor is malfunctioning.	BR-127
ST ANGLE SEN CIRCUIT [C1143]	Neutral position of steering angle sensor is dislocated, or steering angle sensor is malfunctioning.	BR-140
YAW RATE SENSOR [C1145]	Yaw rate/side G sensor has generated an error, or yaw rate/side G sensor signal line is open or shorted.	BR-130
FR LH IN ABS SOL [C1120]	Circuit of front LH IN ABS solenoid is open or shorted, or control line is open or shorted to power supply or ground.	BR-132
FR LH OUT ABS SOL [C1121]	Circuit of front LH OUT ABS solenoid is open or shorted, or control line is open or shorted to power supply or ground.	
RR RH IN ABS SOL [C1126]	Circuit of rear RH IN ABS solenoid is open or shorted, or control line is open or shorted to power supply or ground.	
RR RH OUT ABS SOL [C1127]	Circuit of rear RH OUT ABS solenoid is open or shorted, or control line is open or shorted to power supply or ground.	
FR RH IN ABS SOL [C1122]	Circuit of front RH IN ABS solenoid is open or shorted, or control line is open or shorted to power supply or ground.	
FR RH OUT ABS SOL [C1123]	Circuit of front RH OUT ABS solenoid is open or shorted, or control line is open or shorted to power supply or ground.	
RR LH IN ABS SOL [C1124]	Circuit of rear LH IN ABS solenoid is open or shorted, or control line is open or shorted to power supply or ground.	
RR LH OUT ABS SOL [C1125]	Circuit of rear LH OUT ABS solenoid is open or shorted, or control line is open or shorted to power supply or ground.	
CV1 [C1164]	Front side ESP switch-over solenoid valve (cut valve 1) is open or shorted, or control line is open or shorted to power supply or ground.	
CV2 [C1165	Rear side ESP switch-over solenoid valve (cut valve 2) is open or shorted, or control line is open or shorted to power supply or ground.	
SV1 [C1166]	Front side ESP switch-over solenoid valve (suction valve 1) is open or shorted, or control line is open or shorted to power supply or ground.	
SV2 [C1167]	Rear side ESP switch-over solenoid valve (suction valve 2) is open or shorted, or control line is open or shorted to power supply or ground.	
PUMP MOTOR [C1111]	During actuator motor operation with ON, when actuator motor turns OFF or when control line for actuator motor relay is open.	BR-134
	During actuator motor operation with OFF, when actuator motor turns ON or when control line for relay is shorted to ground.	
ABS SENSOR [MALFUNCTION SIGNAL] [C1115]	Wheel sensor input is malfunction.	BR-123 (Note 1)
BATTERY VOLTAGE [MALFUNCTION] [C1109]	ABS actuator and electric unit (control unit) power voltage is too low.	BR-136
ST ANGLE SEN SIGNAL [C1144]	Neutral position correction of steering angle sensor is not finished.	BR-140
ST ANG SEN COM CIR [C1156]	CAN communication line or steering angle sensor has generated an error.	

Self-diagnostic item	Malfunction detecting condition	Check system
SIDE G-SEN CIRCUIT [C1146]	Yaw rate/side G sensor is malfunctioning, or signal line of yaw rate/side G sensor is open or shorted.	BR-130
CONTROLLER FAILURE [C1110]	Internal malfunction of ABS actuator and electric unit (control unit)	BR-127
CAN COMM CIRCUIT [U1000]	● CAN communication line is open or shorted. ● ABS actuator and electric unit (control unit) internal malfunction ● Battery voltage for EMC is suddenly interrupted for approximately 0.5 seconds or more.	BR-140 (Note 2)
BR FLUID LEVEL LOW [C1155]	Brake fluid level drops or circuit between ABS actuator and electric unit (control unit) and brake fluid level switch is open or shorted.	BR-139
VARIANT CODING [C1170]	V coding is not functioning.	ABS actuator and electric unit (control unit) and circuit
G-SENSOR [C1113]	Decel G sensor is malfunctioning, or signal line of Decel G sensor is open or shorted.	BR-130
ENGINE SIGNAL 1 [C1130]	Based on the signal from ECM, ABS actuator and electric unit (control unit) judges that engine fuel cut system is malfunctioning.	–
ENGINE SIGNAL 2 [C1131]	Based on the signal from ECM, ABS actuator and electric unit (control unit) judges that engine ETC system is malfunctioning.	–
ENGINE SIGNAL 3 [C1132]	Based on the signal from ECM, ABS actuator and electric unit (control unit) judges that engine CAN system is malfunctioning.	–
ENGINE SIGNAL 4 [C1133]	Based on the signal from ECM, ABS actuator and electric unit (control unit) judges that engine torque down system is malfunctioning.	–
ENGINE SIGNAL 6 [C1136]	Based on the signal from ECM, ABS actuator and electric unit (control unit) judges that engine control system is malfunctioning.	–
ACTUATOR RLY [C1140]	● Actuator solenoid valve relay is ON, even if control unit sends off signal. ● Actuator solenoid valve relay is OFF, even if control unit sends on signal.	BR-134
DECEL G SEN SET [C1160]	Neutral position correction of Decel G sensor is not finished.	—

Note 1: After completing repairs of shorted sensor circuit, when ignition switch is turned ON, ABS warning lamp turns on. Make sure that ABS warning lamp turns off while driving vehicle at approximately 30 km/h (19 MPH) for approximately 1 minute according to self-diagnosis procedure. In addition, if wheel sensor 2 is displayed for wheels, check wheel sensor circuit and also check control unit power voltage.

Note 2: If multiple malfunctions are detected including CAN communication line [U1000], perform diagnosis for CAN communication line first.

DATA MONITOR

NLBR0177S04

Operation Procedure

NLBR0177S0401

1. Touch "ABS", "DATA MONITOR" in order on CONSULT-II screen.
   If "ABS" is not indicated, go to GI-35.

CAUTION:

When "START (NISSAN BASED VHCL)" is touched immediately after starting engine or turning on ignition switch, "ABS" might not be displayed in the "SELECT SYSTEM" screen. In this case, repeat the operation from step 2.

2. Return to "SELECT MONITOR ITEM" screen, and touch "ECU INPUT SIGNALS", "MAIN SIGNALS" or "SELECTION FROM

MENU". Refer to following information.

3. When "START" is touched, data monitor screen is displayed.

Display Item List

NLBR0177S0402

Monitor item	Monitor item selection				Remarks
	ECU INPUT SIGNALS	MAIN SIGNALS	SELECTION FROM MENU	CAN DIAG SUPPORT MNTR	
FR RH SENSOR (km/h)	×	×	×	–	Wheel speed calculated by front RH wheel sensor signal is displayed.
FR LH SENSOR (km/h)	×	×	×	–	Wheel speed calculated by front LH wheel sensor signal is displayed.
RR RH SENSOR (km/h)	×	×	×	–	Wheel speed calculated by rear RH wheel sensor signal is displayed.
RR LH SENSOR (km/h)	×	×	×	–	Wheel speed calculated by rear LH wheel sensor signal is displayed.
BATTERY VOLT (V)	×	×	×	–	Voltage supplied to ABS actuator and electric unit (control unit).
SLCT LVR POSI	×	×	×	–	Shift position judged by A/T PNP switch signal.
ACCEL POS SIG (%)	×	–	×	–	Throttle valve open/close status judged by CAN communication signal is displayed.
ENGINE SPEED (rpm)	×	×	×	–	Engine speed judged by CAN communication signal is displayed.
GEAR	×	×	×	–	The gear position determined from the A/T PNP switch signal is displayed.
STR ANGLE SIG (deg)	×	–	×	–	Steering angle detected by steering angle sensor is displayed.
YAW RATE SEN (d/s)	×	×	×	–	Yaw rate detected by yaw rate side G sensor is displayed.
SIDE G-SENSOR (m/s^2)	×	–	×	–	Lateral acceleration detected by yaw rate/side G sensor is displayed.
PRESS SENSOR (bar)	×	–	×	–	Brake fluid pressure detected by pressure sensor is displayed.
STOP LAMP SW (ON/OFF)	×	×	×	–	Stop lamp switch (ON/OFF) status is displayed.
OFF SW (ON/OFF)	×	×	×	–	ESP OFF switch (ON/OFF) status is displayed.
ABS WARN LAMP (ON/OFF)	–	×	×	–	ABS warning lamp (ON/OFF) status is displayed.

Monitor item	Monitor item selection				Remarks
	ECU INPUT SIGNALS	MAIN SIGNALS	SELECTION FROM MENU	CAN DIAG SUPPORT MNTR	
SLIP LAMP (ON/OFF)	–	×	×	–	SLIP indicator lamp (ON/OFF) status is displayed.
FR LH IN SOL (ON/OFF)	–	×	×	–	Front LH IN ABS solenoid (ON/OFF) status is displayed.
FR LH OUT SOL (ON/OFF)	–	×	×	–	Front LH OUT ABS solenoid (ON/OFF) status is displayed.
RR RH IN SOL (ON/OFF)	–	×	×	–	Rear RH IN ABS solenoid (ON/OFF) status is displayed.
RR RH OUT SOL (ON/OFF)	–	×	×	–	Rear RH OUT ABS solenoid (ON/OFF) status is displayed.
FR RH IN SOL (ON/OFF)	–	×	×	–	Front RH IN ABS solenoid (ON/OFF) status is displayed.
FR RH OUT SOL (ON/OFF)	–	×	×	–	Front RH OUT ABS solenoid (ON/OFF) status is displayed.
RR LH IN SOL (ON/OFF)	–	×	×	–	Rear LH IN ABS solenoid (ON/OFF) status is displayed.
RR LH OUT SOL (ON/OFF)	–	×	×	–	Rear LH OUT ABS solenoid (ON/OFF) status is displayed.
OFF LAMP (ON/OFF)	–	×	×	–	OFF Lamp (ON/OFF) status is displayed.
MOTOR RELAY (ON/OFF)	–	×	×	–	ABS motor relay signal (ON/OFF) status is displayed.
ACTUATOR RLY (ON/OFF)	–	×	×	–	ABS actuator relay signal (ON/OFF) status is displayed.
CV1 (ON/OFF)	–	–	×	–	Front side switch-over solenoid valve (cut valve 1) (ON/OFF) status is displayed.
CV2 (ON/OFF)	–	–	×	–	Rear side switch-over solenoid valve (cut valve 2) (ON/OFF) status is displayed.
SV1 (ON/OFF)	–	–	×	–	Front side switch-over solenoid valve (suction valve 1) (ON/OFF) status is displayed.
SV2 (ON/OFF)	–	–	×	–	Rear side switch-over solenoid valve (suction valve 2) (ON/OFF) status is displayed.
ESP FAIL SIG (ON/OFF)	–	–	×	–	ESP fail signal (ON/OFF) status is displayed.
TCS FAIL SIG (ON/OFF)	–	–	×	–	TCS fail signal (ON/OFF) status is displayed.
ABS FAIL SIG (ON/OFF)	–	–	×	–	ABS fail signal (ON/OFF) status is displayed.
EBD FAIL SIG (ON/OFF)	–	–	×	–	EBD fail signal (ON/OFF) status is displayed.
FLUID LEV SW (ON/OFF)	×	–	×	–	Brake fluid level switch (ON/OFF) status is displayed.

Monitor item	Monitor item selection				Remarks
	ECU INPUT SIGNALS	MAIN SIGNALS	SELECTION FROM MENU	CAN DIAG SUPPORT MNTR	
EBD SIGNAL (ON/OFF)	–	–	×	–	EBD operation (ON/OFF) status is displayed.
ABS SIGNAL (ON/OFF)	–	–	×	–	ABS operation (ON/OFF) status is displayed.
TCS SIGNAL (ON/OFF)	–	–	×	–	TCS operation (ON/OFF) status is displayed.
ESP SIGNAL (ON/OFF)	–	–	×	–	ESP operation (ON/OFF) status is displayed.
CAN COMM (OK/NG)	–	–	–	×	CAN communication signal (OK/NG) status is displayed.
CAN CIRC 1 (OK/UNKWN)	–	–	–	×	CAN communication signal (OK/UNKWN) status is displayed.
CAN CIRC 2 (OK/UNKWN)	–	–	–	×	
CAN CIRC 3 (OK/UNKWN)	–	–	–	×	
CAN CIRC 4 (OK/UNKWN)	–	–	–	×	
CAN CIRC 5 (OK/UNKWN)	–	–	–	×	
CAN CIRC 6 (OK/UNKWN)	–	–	–	×	
CAN CIRC 7 (OK/UNKWN)	–	–	–	×	
EBD WARN LAMP (ON/OFF)	–	–	×	–	Brake warning lamp (ON/OFF) status is displayed. (Note)
CRANKING SIG (ON/OFF)	–	–	×	–	Cranking condition (ON/OFF) status is displayed.

×: Applicable
–: Not applicable
Note: Serves as EBD warning lamp.

ACTIVE TEST

NLBR0177S05

CAUTION:

- **Do not perform active test while driving vehicle.**
- **Make sure to completely bleed air from the brake system.**
- **Active test cannot be performed when ABS warning lamp is on.**
- **ABS and brake warning lamps turn on during the active test.**

Operation Procedure

NLBR0177S0501

1. Touch "ABS".
   If "ABS" is not indicated, go to GI-35.
2. Touch "ACTIVE TEST".

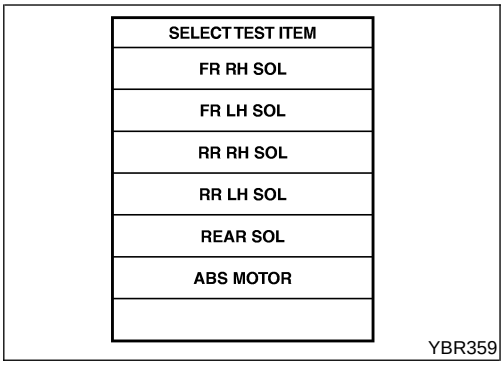

3. "SELECT TEST ITEM" screen is displayed.
4. Touch necessary test item.
5. With "SELECT TEST SIGNALS" display shown in reverse, touch "START".
6. "ACTIVE TEST" screen will be displayed, so conduct following test.

Test Item

NLBR0177S0502

Solenoid valve

CAUTION:
The example shown is for front right wheel. The procedure for the other wheels is the same as given below.

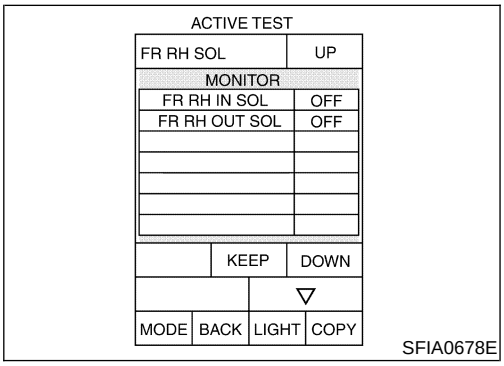

1. For ABS solenoid valve, touch "UP", "KEEP", and "DOWN". Then use screen monitor to make sure that solenoid valve operates as shown in Solenoid Valve Operation Chart. Refer to "Solenoid Valve Operation Chart".

Solenoid Valve Operation Chart

NLBR0177S0503

Operation	ABS solenoid valve			ABS solenoid valve (ACT)		
	UP	KEEP	DOWN	UP	ACTUATOR UP	ACTUATOR KEEP
FR RH IN SOL	OFF	ON	ON	OFF	OFF	OFF
FR RH OUT SOL	OFF	OFF	ON*	OFF	OFF	OFF
FR LH IN SOL	OFF	ON	ON	OFF	OFF	OFF
FR LH OUT SOL	OFF	OFF	ON*	OFF	OFF	OFF
RR RH IN SOL	OFF	ON	ON	OFF	OFF	OFF
RR RH OUT SOL	OFF	OFF	ON*	OFF	OFF	OFF
RR LH IN SOL	OFF	ON	ON	OFF	OFF	OFF
RR LH OUT SOL	OFF	OFF	ON*	OFF	OFF	OFF

NOTE:
- When active test is performed while depressing pedal, pedal depression amount will change, but this is normal.
- Approximately 10 seconds after operation is begun, "TEST STOP" will be displayed.

- To perform retest after "TEST STOP" is displayed, touch "BACK" and conduct the test from the step 6.

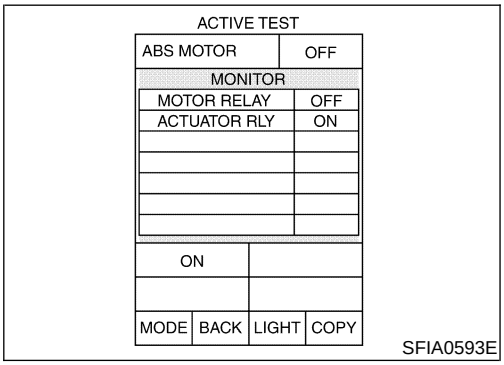

ABS Motor

NLBR0177S0504

Touch "ON" and "OFF" on the screen. Make sure ABS motor relay operates as shown in table below.

Operation	ON	OFF
ABS actuator relay	ON	ON
ABS motor relay	ON	OFF

NOTE:

- When active test is performed while depressing pedal, pedal depression amount will change, but this is normal.
- Approximately 10 seconds after operation is begun, "TEST STOP" will be displayed.
- To perform retest after "TEST STOP" is displayed, touch "BACK" and conduct the test from the step 6.

For Fast and Accurate Diagnosis

NLBR0178

PRECAUTIONS FOR DIAGNOSIS

NLBR0178S01

- Before performing diagnosis, always read precautions. Refer to BR-7.
- If ABS actuator and electric unit (control unit), steering angle sensor, steering system parts, suspension system parts, or tires have been replaced, or if alignment has been adjusted, be sure to adjust neutral position of steering angle sensor before driving. Refer to BR-82.
- After diagnosis is finished, be sure to erase memory. Refer to GI-35.
- When checking continuity and voltage between units, be sure to check for disconnection, looseness, bend, or collapse of connector terminals. If any malfunction is found, repair or replace connector terminals.
- For intermittent symptoms, possible cause is malfunction in harness, harness connector, or terminals. Move harness, harness connector, and terminals to check for poor connections.
- If a circuit tester is used for the check, be careful not to forcibly extend any connector terminal.
- To use CONSULT-II to perform self-diagnosis of ABS actuator and electric unit (control unit), active tests, or work support,

first stop work, then connect CONSULT-II and select "ABS".

- While self-diagnostic results of CONSULT-II shows malfunction, if CONSULT-II active test is performed, an engine system error may be indicated. In this case, start engine to resume the normal screen.
- ESP/TCS/ABS system electronically controls brake operation and engine output. The following symptoms may be caused by normal operations:
- When CONSULT-II is used, ABS warning lamp, ESP OFF indicator lamp, SLIP indicator lamp may be ON/OFF.

Symptom	Symptom description	Result
Motor operation noise	This is noise of motor inside ABS actuator and electric unit (control unit). Slight noise may occur during ESP, TCS, and ABS operation.	Normal
	When the vehicle speed goes over 20 km/h (12.5 MPH), the motor and valves operating noise may be heard. It happens only once after ignition switch is ON. This is a normal status of the system operation check.	
System operation check noise	When engine starts, slight "click" noise may be heard from engine room. This is normal and is part of system operation check.	Normal
ESP/TCS operation (SLIP lamp blinking)	TCS may activate momentarily if wheel speed changes when driving over location where friction coefficient varies, when downshifting, or when fully depressing accelerator pedal.	Normal Cancel the ESP/TCS function for the inspection on a chassis dynamometer.
	For inspection of speedometer or other instruments, press ESP OFF SW to turn ESP/TCS function off.	
	When accelerator pedal is depressed on a chassis dynamometer (fixed front-wheel type), vehicle speed will not increase. This is not normal. It is result of TCS being activated by stationary front wheels. Warning lamp may also illuminate to indicate "sensor system error". This is also normal, and is the result of the stationary front wheels being detected. To be certain, restart engine, and drive vehicle at 30 km/h (19 MPH) or above. Make sure that warning lamp does not illuminate.	
ABS operation (Longer stopping distance)	On roads with low friction coefficients, such as snowy roads or gravel roads, vehicles with ABS may require a longer stopping distance. Therefore, when driving on such roads, avoid overconfidence and keep speed sufficiently low.	Normal
Insufficient feeling of acceleration	Depending on road conditions, driver may feel that feeling of acceleration is insufficient. This is because traction control, which controls engine and brakes to achieve optimal traction, has the highest priority (for safety). As a result, there may be times when acceleration is slightly less than usual for the same accelerator pedal operation.	Normal

ON and OFF Timing for ABS Warning Lamp, ESP OFF Indicator Lamp, and SLIP Indicator Lamp

NLBR0178S0101

×: ON –: OFF

Condition	ABS warning lamp	ESP OFF indicator lamp	SLIP indicator lamp	Remarks
Ignition switch OFF	—	—	—	—
For approx. 2 seconds after ignition switch is turned ON	×	×	×	—
Approx. 2 seconds after ignition switch is turned ON	—	—	—	Turns OFF 2 seconds after ignition switch is turned ON.
ESP OFF switch is turned ON. (ESP/TCS function is OFF.)	—	×	—	—

Condition	ABS warning lamp	ESP OFF indicator lamp	SLIP indicator lamp	Remarks
There is an ESP/TCS/ABS error.	×	×	×	—
	×	×	×	There is an ABS actuator and electric unit (control unit) error. (Power or ground or system malfunction)
When ESP/TCS is not functioning normally.	—	×	×	—

Basic Inspection

NLBR0179

BASIC INSPECTION 1 BRAKE FLUID LEVEL, LEAKS, AND BRAKE PADS

NLBR0179S01

1. Check fluid level in the brake reservoir tank. If fluid level is low, refill the brake fluid.
2. Check the brake piping and around the ABS actuator and electric unit (control unit) for leaks. If leakage or seepage is found, check the following items.

- If ABS actuator and electric unit (control unit) connection is loose, tighten the piping to the specified torque and make sure there are no leaks.
- If there is damage to the connection flare nut or ABS actuator and electric unit (control unit) screw, replace the damaged part and re-conduct the leak inspection to make sure there are no leaks.
- If there is leakage or seepage at any location other than ABS actuator and electric unit (control unit) connection, wipe away leakage or seepage with clean cloth. Then inspect again and confirm the there is no leakage.
- If there is leakage from ABS actuator and electric unit (control unit), wipe away leakage or seepage with clean cloth. Then inspect again. If there is leakage or seepage, replace ABS actuator and electric unit (control unit).

CAUTION:
ABS actuator body cannot be disassembled.

3. Check brake disc and pads. Refer to BR-28 in "Front Disc Brake" and BR-34 in "Rear Disc Brake".

BASIC INSPECTION 2 POWER SYSTEM TERMINAL LOOSENESS AND BATTERY INSPECTION

NLBR0179S02

Make sure the battery positive cable, negative cable and ground connection are not loose. If looseness is detected, tighten the piping to the specified torque. In addition, check the battery voltage to make sure it has not dropped and the altimeter is normal.

BASIC INSPECTION 3 ABS WARNING LAMP, ESP OFF INDICATOR LAMP, SLIP INDICATOR LAMP INSPECTION

NLBR0179S03

1. Check that ABS warning lamp, ESP OFF indicator lamp (when ESP OFF switch is OFF), and SLIP indicator lamp turns ON approximately 2 second when ignition switch is turned ON. If they do not, check the ESP OFF indicator lamp and then ESP OFF switch. Refer to BR-142. Check CAN communications. Refer to BR-140. If there are no errors with ESP OFF switch and CAN communication system, check ABS warning lamp, ESP OFF indicator lamp, SLIP indicator lamp and combination meter. Refer to EL-114.

2. Make sure the lamp turns OFF approximately 2 second after ignition switch is turned ON. If the lamp does not turn OFF, conduct self-diagnosis.
3. With engine running, make sure ESP OFF indicator lamp turns ON and OFF when ESP OFF switch is turned ON and OFF. If the indicator lamp status does not correspond to switch operation, check ESP OFF switch system. Refer to BR-142.
4. Make sure ABS warning lamp, ESP OFF indicator lamp, and SLIP indicator lamp turns OFF 2 seconds after engine is started. If ABS warning lamp, ESP OFF indicator lamp, and SLIP indicator lamp have not turned off 10 seconds after engine has been started, conduct self-diagnosis of ABS actuator and electric unit (control unit).
5. After conducting self-diagnosis, be sure to erase the error memory. Refer to GI-35.

Inspection 1 Wheel Sensor System

NLBR0180

After using the CONSULT-II SELF-DIAG RESULTS to determine positions of malfunctioning wheel sensor, check all areas to determine the component to be replaced.

CAUTION:

- **Do not measure the resistance value and also voltage between sensor terminal with tester etc., because e sensor is an active sensor.**
- **Do not expand terminal of connector with a tester terminal stick, when it does the inspection with the tester.**

INSPECTION PROCEDURE

1	CHECK SELF-DIAGNOSTIC RESULTS

Check self-diagnostic results.

SELF-DIAG RESULTS	
DTCRESULTS	TIME
RR RH SENSOR-1 [C1101]	0

SFIA0625E

Self-diagnostic results
FR RH SENSOR-1, -2
FR LH SENSOR-1, -2
RR RH SENSOR-1, -2
RR LH SENSOR-1, -2
ABS SENSOR

MTBL1603

Is above displayed in self-diagnosis display items?

Yes	▶	GO TO 2.
No	▶	**INSPECTION END**

2	CHECK CONNECTOR

1. Disconnect ABS actuator and electric unit (control unit) B70 connector E143 and the malfunctioning wheel sensor connector E131 (FR - LH) or E147 (FR - RH) or B57 (RR - LH), B70 (RR - RH). Check terminal to see if it is deformed, disconnected, loose, etc., and repair or replace it if any malfunction condition is found.
2. Reconnect connectors and check that interference with other parts has not cut wheel sensor cables, drive at a speed of 30 km/h (19 MPH) or above for at least 1 minute, and perform self-diagnosis.

OK or NG

OK	▶	Connector terminal contact is loose, damaged, open or shorted.
NG	▶	GO TO 3.

3	CHECK WHEEL SENSOR HARNESS

1. Turn ignition switch OFF and disconnect the wheel sensor connector E131 (FR - LH), E147 (FR - RH), B57 (RR - LH), B70 (RR - RH) and ABS actuator and electric unit (control unit) connector E143.

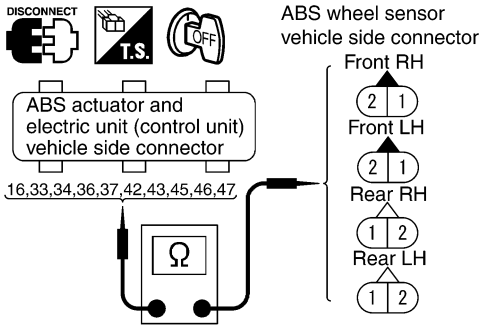

PFIA0426E

2. Check continuity between terminals. (Also check continuity when steering wheel is turned right and left and when sensor harness inside the wheel well is moved.)

	Power system		Signal system		Ground system	
Wheel	ABS actuator and electric unit (control unit)	Wheel sensor	ABS actuator and electric unit (control unit)	Wheel sensor	ABS actuator and electric unit (control unit)	ABS actuator and electric unit (control unit) (Ground)
Front RH	34 (W)	1 (W)	33 (B)	2 (B)	33 (B), 34 (W)	16 (B), 47 (B)
Front LH	45 (R)	1 (R)	46 (G)	2 (G)	45 (R), 46 (G)	
Rear RH	43 (PU)	1 (PU)	42 (LG)	2 (LG)	43 (PU), 42 (LG)	
Rear LH	36 (P)	1 (P)	37 (L)	2 (L)	36 (P), 37 (L)	

MTBL1604

Power system: Continuity should exist.
Signal system: Continuity should exist.
Ground system: Continuity should not exist.

OK or NG

OK	▶	GO TO 4.
NG	▶	Repair harness and connector between ABS actuator and electric unit (control unit) and wheel sensor.

4	CHECK TIRE

Check air pressure, wear, and size.

Are air pressure, wear, and size within the standard values?

Yes	▶	GO TO 5.
No	▶	Adjust air pressure, or replace tire.

5	CHECK SENSOR AND SENSOR ROTOR

Check the following:
- Condition of sensor mount (for looseness, etc.)
- Surface of front sensor rotor rubber for damage
- Rear sensor rotor for damage

OK or NG

OK	▶	GO TO 6.
NG	▶	Repair or replace the malfunctioning component.

6	CHECK WHEEL SENSOR POWER SUPPLY CIRCUIT

1. Connect the wheel sensor connector E131 (FR - LH), E147 (FR - RH), B57 (RR - LH), B70 (RR - RH) and ABS actuator and electric unit (control unit) connector E143.

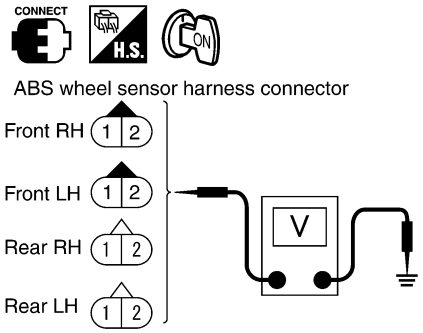

PFIA0427E

2. Turn ignition switch ON and check voltage between power supply terminal and ground.

Voltage

Front RH 1 (W) - Ground: 8 V or more
Front LH 1 (R) - Ground: 8 V or more
Rear RH 1 (PU) - Ground: 8 V or more
Rear LH 1 (P) - Ground: 8 V or more

OK or NG

OK	▶	Replace wheel sensor.
NG	▶	Replace the ABS actuator and electric unit (control unit).

Inspection 2 Engine System

NLBR0181

INSPECTION PROCEDURE

1	CHECK SELF-DIAGNOSTIC RESULTS

Check self-diagnostic results.

Self-diagnostic results
ENGINE SIGNAL 1
ENGINE SIGNAL 2
ENGINE SIGNAL 3
ENGINE SIGNAL 4
ENGINE SIGNAL 5
ENGINE SIGNAL 6

MTBL1605

Is above displayed in self-diagnosis display items?

Yes	▶	GO TO 2.
No	▶	**INSPECTION END**

2	CHECK ENGINE SYSTEM
1. Perform an ECM self-diagnosis and repair or replace any malfunction items. Perform the ECM self-diagnosis. 2. Perform ABS actuator and electric unit (control unit) self-diagnosis again.	
OK or NG	
OK ▶	**INSPECTION END**
NG ▶	Repair or replace any malfunction items. Perform self-diagnosis again.

Inspection 3 ESP/TCS/ABS Control Unit System

NLBR0182

INSPECTION PROCEDURE

1	CHECK SELF-DIAGNOSTIC RESULTS
Check self-diagnostic results.	

Self-diagnostic results
CONTROLLER FAILURE

MTBL1606

Is above displayed in self-diagnosis display items?	
Yes ▶	Replace ABS actuator and electric unit (control unit). Perform self-diagnosis again.
No ▶	**INSPECTION END**

Inspection 4 Pressure Sensor System

NLBR0183

INSPECTION PROCEDURE

1	CHECK SELF-DIAGNOSTIC RESULTS
Check self-diagnostic results.	

Self-diagnostic results
PRESS SEN CIRCUIT

MTBL1607

Is above displayed in self-diagnosis display items?	
Yes ▶	GO TO 2.
No ▶	**INSPECTION END**

2	CHECK CONNECTOR
1. Disconnect pressure sensor connector E130 and ABS actuator and electric unit (control unit) connector E143, check terminals for deformation, disconnection, looseness, and so on. If there is an error, repair or replace terminal. 2. Reconnect connectors and perform ABS actuator and electric unit (control unit) self-diagnosis again.	
OK or NG	
OK ▶	Connector terminal contact is loose, damaged, open or shorted.
NG ▶	GO TO 3.

3	CHECK PRESSURE SENSOR HARNESS

1. Turn ignition switch OFF and disconnect pressure sensor connector E130 and ABS actuator and electric unit (control unit) connector E143.

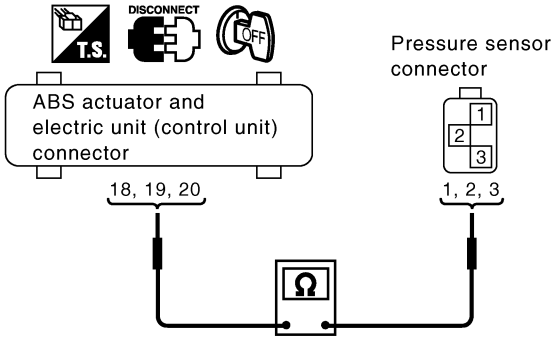

YBR369

2. Check continuity between ABS actuator and electric unit (control unit) connector and pressure sensor connector.

ABS actuator and electric unit (control unit)	Pressure sensor	Continuity
18 (W/G)	1 (W/G)	Yes
20 (R/Y)	2 (R/Y)	Yes
19 (B)	3 (B)	Yes

MTBL1608

OK or NG

OK	▶	GO TO 4.
NG	▶	If there is an open or short in harness, repair or replace harness.

4	PRESSURE SENSOR INSPECTION

1. Connect pressure sensor connector E130 and ABS actuator and electric unit (control unit) connectors E143.
2. Use "Data Monitor" to check the pressure sensor value.

Condition	Data monitor display
When brake pedal is depressed.	Positive value
When brake pedal is released.	Approx. 0 bar

MTBL1609

OK or NG

OK	▶	**INSPECTION END**
NG	▶	Pressure sensor is damaged or malfunctioning, replace pressure sensor.

Inspection 5 Steering Angle Sensor System

=NLBR0184

INSPECTION PROCEDURE

1	CHECK SELF-DIAGNOSTIC RESULTS	
Check self-diagnostic results.		

Self-diagnostic results
ST ANGLE SEN CIRCUIT

MTBL1610

Is above displayed in self-diagnosis item?

Yes	▶	GO TO 2.
No	▶	**INSPECTION END**

2	CHECK CONNECTOR	

1. Disconnect steering angle sensor connector E129 and ABS actuator and electric unit (control unit) connector E143 and check terminals for deformation, disconnection, looseness, and so on. If there is an error, repair or replace terminal.
2. Reconnect connectors and perform an ABS actuator and electric unit (control unit) self-diagnosis again.

OK or NG

OK	▶	Connector terminal contact is loose, damaged, open or shorted.
NG	▶	GO TO 3.

3	CHECK STEERING ANGLE SENSOR HARNESS	

1. Check CAN communication system. Refer to BR-140.
2. Turn ignition switch OFF and disconnect steering angle sensor connector E129 and ABS actuator and electric unit (control unit) connector E143.

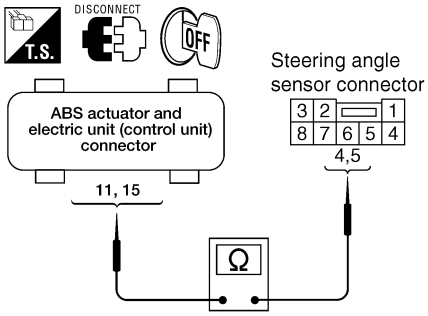

PFIA0459E

3. Check continuity between ABS actuator and electric unit (control unit) connector terminal and steering angle sensor connector terminal.

ABS actuator and electric unit (control unit)	Steering angle sensor	Continuity
11 (L)	4 (L)	Yes
15 (R)	5 (R)	Yes

MTBL1611

OK or NG

OK	▶	GO TO 4.
NG	▶	If the open or short in harness, repair or replace harness.

4	CHECK STEERING WHEEL PLAY	
Check steering wheel play. Refer to ST-6.		
OK or NG		
OK	▶	GO TO 5.
NG	▶	Adjust steering wheel play.

5	CHECK DATA MONITOR	
1. Connect steering angle sensor and ABS actuator and electric unit (control unit) connectors. 2. Conduct "Data Monitor" of the "STEERING ANGLE SIGNAL" to check if the status is normal.		
OK or NG		
OK	▶	Perform ABS actuator and electric unit (control unit) self-diagnosis again.
NG	▶	Replace spiral cable (steering angle sensor) and adjust neutral position of steering angle sensor. Refer to BR-82.

Steering condition	Data monitor
Straight-ahead	–3.5 deg to +3.5 deg
Turn wheel to the right by 90°	Approx. –90 deg
Turn wheel to the left by 90°	Approx. +90 deg

MTBL1612

Inspection 6 Yaw Rate/Side G sensor System

NLBR0185

CAUTION:

Sudden turns (such as spin turns, acceleration turns), drifting, etc. may cause yaw rate/side G sensor system indicate a malfunction. However this is not a malfunction if normal operation can be resumed after restarting engine.

INSPECTION PROCEDURE

1	CHECK SELF-DIAGNOSTIC RESULTS

Check self-diagnostic results.

Self-diagnostic results
YAW RATE SENSOR
SIDE G-SEN CIRCUIT
G-SENSOR

MTBL1613

CAUTION:
When on a turntable, such as at a parking structure entrance, or when on a moving object with engine running, the ESP OFF indicator lamp might turn on and self-diagnosis using the CONSULT-II yaw rate sensor system malfunction might be displayed, but in this case there is no problem with yaw rate/side G sensor system. As soon as the vehicle leaves the turntable or moving object, restart engine to return the system to normal.

Is above displayed in self-diagnosis display items?

Yes	▶	GO TO 2.
No	▶	**INSPECTION END**

2	CHECK CONNECTOR

1. Disconnect yaw rate/side G sensor connector B66 and ABS actuator and electric unit (control unit) connector E143 and check terminals for deformation, disconnection, looseness, and so on. If there is an error, repair or replace terminal.
2. Reconnect connectors and perform an ABS actuator and electric unit (control unit) self-diagnosis again.

OK or NG

OK	▶	Connector terminal contact is loose, damaged, open or shorted.
NG	▶	GO TO 3.

3	CHECK YAW RATE SENSOR/SIDE G SENSOR HARNESS

1. Turn ignition switch OFF and disconnect yaw rate/side G sensor connector B66 and ABS actuator and electric unit (control unit) connector E143.

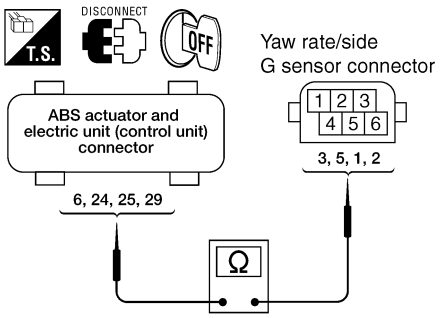

PFIA0460E

2. Check continuity between ABS actuator and electric unit (control unit) connector and yaw rate/side G sensor connector.

ABS actuator and electric unit (control unit)	Yaw rate/side G sensor	Continuity
6 (O/R)	3 (LG/B)	Yes
24 (W/R)	5 (O/R)	Yes
25 (L/W)	1 (L/R)	Yes
29 (LG/B)	2 (L/W)	Yes

MTBL1614

OK or NG

OK	▶	GO TO 4.
NG	▶	If there is an open or short in harness, repair or replace harness.

4	CHECK YAW RATE SENSOR/SIDE G SENSOR

1. Connect yaw rate/side G sensor B66 and ABS actuator and electric unit (control unit) connector E143.
2. Use "Data Monitor" to check if yaw rate sensor/side/decel G sensor are normal.

Vehicle status	Yaw rate sensor (Data monitor standard)	Side G sensor (Data monitor standard)
When stopped	–4 to +4 deg/s	^{2}–1.1 to +1.1 m/s
Right turn	Negative value	Negative value
Left turn	Positive value	Positive value
Speed up	—	—
Speed down	—	—

MTBL1615

OK or NG

OK	▶	Perform ABS actuator and electric unit (control unit) self-diagnosis again.
NG	▶	Replace the malfunctioning yaw rate sensor/side G sensor, and then perform ABS actuator and electric unit (control unit) self-diagnosis again.

Inspection 7 Solenoid and ESP Change-over Valve System

NLBR0186

INSPECTION PROCEDURE

1	CHECK SELF-DIAGNOSTIC RESULTS

Check self-diagnostic results.

Self-diagnostic results
FR LH IN SOL
FR LH OUT SOL
RR RH IN SOL
RR RH OUT SOL
FR RH IN SOL
FR RH OUT SOL
RR LH IN SOL
RR LH OUT SOL
CV 1
CV 2
SV 1
SV 2

MTBL1616

Is above displayed in self-diagnosis display items?

Yes	▶	GO TO 2.
No	▶	**INSPECTION END**

2	CHECK CONNECTOR

1. Disconnect ABS actuator and electric unit (control unit) connector E143 check terminals for deformation, disconnection, looseness, and so on. If there is an error, repair or replace terminal.
2. Securely reconnect connectors and perform self-diagnosis.

OK or NG

OK	▶	Connector terminal contact is loose, damaged, open or shorted.
NG	▶	GO TO 3.

3	CHECK SOLENOID POWER AND GROUND CIRCUIT

1. Disconnect ABS actuator and electric unit (control unit) connector E143.
2. Check voltage between ABS actuator and electric unit (control unit) harness connector E143 and ground.

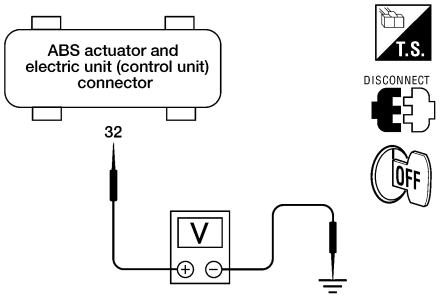

LFIA0148E

ABS actuator and electric unit (control unit)	Ground	Voltage (V) (Approx.)
32 (W/L)	—	12 V

MTBL1617

3. Check resistance between ABS actuator and electric unit (control unit) harness connector E143 and ground.

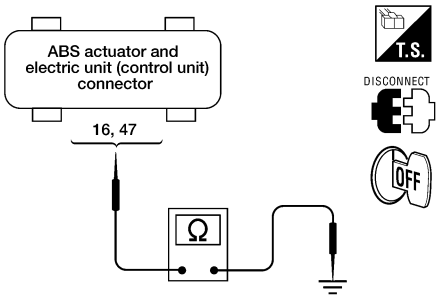

LFIA0152E

ABS actuator and electric unit (control unit)	Ground	Resistance (Ω) (Approx.)
16 (B), 47 (B)	—	0 Ω

MTBL1618

OK or NG

OK	▶	Perform self-diagnosis again. If the same results appear, replace ABS actuator and electric unit (control unit). Refer to BR-151.
NG	▶	Repair harness or connectors.

Inspection 8 Actuator Motor, Motor Relay, and Circuit

=NLBR0187

INSPECTION PROCEDURE

1	CHECK SELF-DIAGNOSTIC RESULTS (1)	
Check self-diagnostic results.		

Self-diagnostic results
CONSULT-II display items
PUMP MOTOR
ACTUATOR RLY

MTBL1619

Is above displayed in self-diagnosis display items?

Yes	▶	GO TO 2.
No	▶	**INSPECTION END**

2	CHECK SELF-DIAGNOSTIC RESULTS (2)	
1. Disconnect ABS actuator and electric unit (control unit) connector E143. Then reconnect it securely. 2. Perform self-diagnosis again.		

Do any self-diagnosis items appear?

Yes	▶	GO TO 3.
No	▶	Repair or replace the applicable connector.

3	CHECK ABS MOTOR AND MOTOR RELAY POWER SYSTEM

1. Disconnect ABS actuator and electric unit (control unit) connector E143.
2. Check voltage between ABS actuator and electric unit (control unit) connector E143 and ground.

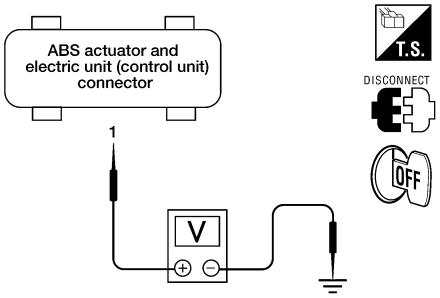

LFIA0149E

ABS actuator and electric unit (control unit)	Ground	Voltage (V) (Approx.)
1 (L)	—	12 V

MTBL1620

3. Check resistance between ABS actuator and electric unit (control unit) connector E143 and ground.

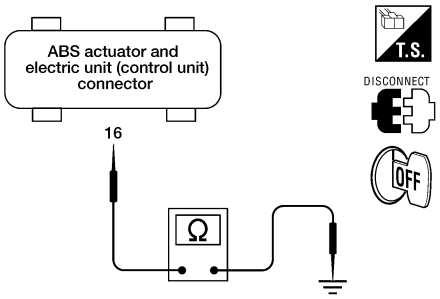

LFIA0147E

ABS actuator and electric unit (control unit)	Ground	Resistance (Ω) (Approx.)
16 (B)	—	0 Ω

MTBL1621

OK or NG

OK	▶	Perform self-diagnosis again. If the same result appears, replace ABS actuator and electric unit (control unit). Refer to BR-151.
NG	▶	Repair harness or connectors.

Inspection 9 ABS Actuator and Electric Unit (Control Unit) Power Supply and Ground Circuit

=NLBR0188

INSPECTION PROCEDURE

1	CHECK SELF-DIAGNOSTIC RESULTS

Check self-diagnostic results.

Self-diagnostic results
CONSULT-II display items
BATTERY VOLTAGE

MTBL1622

Does "BATTERY VOLTAGE" appear in self-diagnostic results display?

Yes	▶	GO TO 2.
No	▶	**INSPECTION END**

2	CHECK STARTING

1. Disconnect ABS actuator and electric unit (control unit) connector E143. Then reconnect it securely.
2. Perform self-diagnosis.

Do any self-diagnosis items appear?

Yes	▶	GO TO 3.
No	▶	Repair or replace connector.

3	CHECK ABS ACTUATOR AND ELECTRIC UNIT (CONTROL UNIT) POWER SUPPLY

1. Disconnect ABS actuator and electric unit (control unit) connector E143.
2. Turn ignition switch ON (but do not start engine). Check voltage between ABS actuator and electric unit (control unit) harness connector E143 and ground.

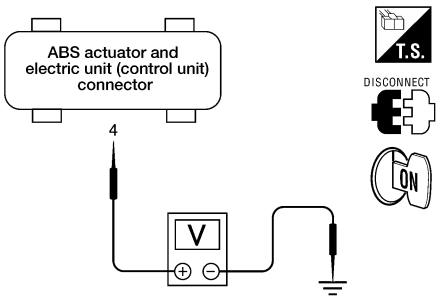

LFIA0151E

ABS actuator and electric unit (control unit)	Ground	Voltage (V) (Approx.)
4 (G/Y)	—	12 V

MTBL1623

OK or NG

OK	▶	GO TO 4.
NG	▶	GO TO 5.

4	CHECK ABS ACTUATOR AND ELECTRIC UNIT (CONTROL UNIT) GROUND CIRCUITS

Check ABS actuator and electric unit (control unit) ground circuits.

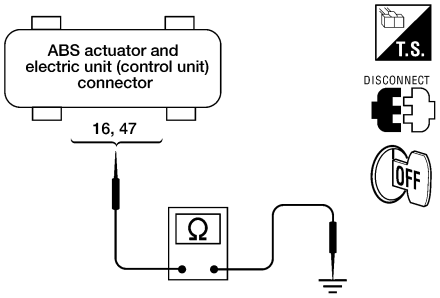

LFIA0152E

ABS actuator and electric unit (control unit)	Ground	Continuity
16 (B), 47 (B)	—	Yes

MTBL1624

OK or NG

OK	▶	Perform ABS actuator and electric unit (control unit) self-diagnosis again.
NG	▶	Repair harness or connectors.

5	CHECK ABS ACTUATOR AND ELECTRIC UNIT (CONTROL UNIT) POWER SYSTEM

1. Disconnect ABS actuator and electric unit (control unit) connector E143.
2. Check continuity between battery positive terminal and ABS actuator and electric unit (control unit) connector E143.

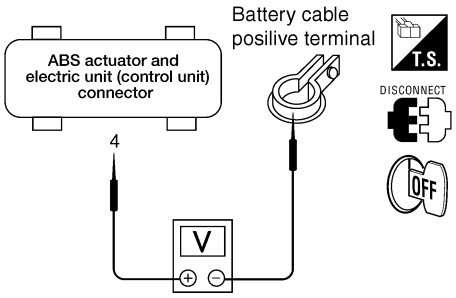

PFIA0461E

ABS actuator and electric unit (control unit)	Battery positive terminal	Continuity
4 (G/Y)	—	Yes

MTBL1625

OK or NG

Yes	▶	Check for malfunction conditions in battery (terminal looseness, low voltage, etc.) and alternator.
No	▶	Repair harness or connectors.

Inspection 10 Stop Lamp Switch System

NLBR0189

INSPECTION PROCEDURE

1	CHECK SELF-DIAGNOSTIC RESULTS	
Check self-diagnostic results.		

Self-diagnostic results
STOP LAMP SW

MTBL1626

Is above displayed in self-diagnosis display items?

Yes	▶	GO TO 2.
No	▶	**INSPECTION END**

2	CHECK CONNECTOR	

1. Disconnect the stop lamp switch connector F30 (QG engine), F12 (YD22DDT engine), F66 (YD22DDTi engine) and ABS actuator and electric unit (control unit) connector E143 and check terminals for deformation, disconnection, looseness, and so on. If any malfunction is found, repair or replace terminal.
2. Securely reconnect connectors.
3. Start engine.
4. Repeat pumping brake pedal carefully several times, then perform self-diagnosis again.

OK or NG

OK	▶	Connector terminal contact is loose, damaged, open or shorted.
NG	▶	GO TO 3.

3	CHECK STOP LAMP SWITCH CIRCUIT	

1. Turn ignition switch OFF and disconnect stop lamp switch connector F30 (QG engine), F12 (model with YD22DDT engine), F66 (YD22DDTi engine) and ABS actuator and electric unit (control unit) connector E143.

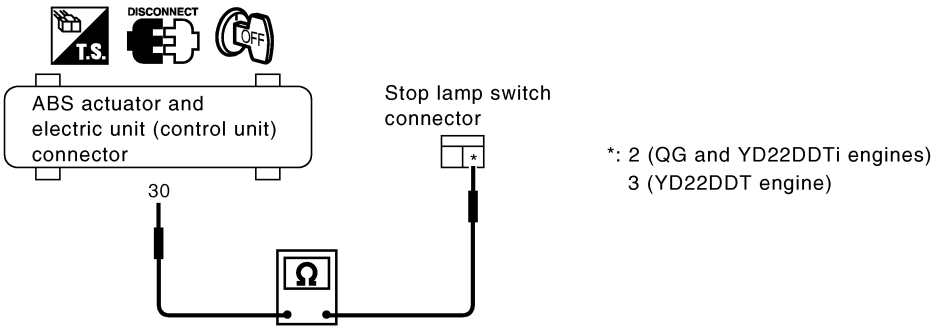

YBR374

2. Check continuity between stop lamp switch harness connector F30 (QG engine), F12 (model with YD22DDT engine), F66 (YD22DDTi engine) and ABS actuator and electric unit (control unit) harness connector E143.

ABS actuator and electric unit (control unit)	Stop lamp switch	Continuity
30 (R)	—	Yes

MTBL1627

OK or NG

OK	▶	Connect connectors and perform an ABS actuator and electric unit (control unit) self-diagnosis.
NG	▶	Open or short in harness. Repair or replace harness.

Inspection 11 Brake Fluid Level Sensor System

=NLBR0190

INSPECTION PROCEDURE

1	CHECK SELF-DIAGNOSTIC RESULTS

1. Check the brake reservoir tank fluid level. If the level is low, add brake fluid.
2. Erase self-diagnostic results and check self-diagnostic results.

Self-diagnostic results
BR FLUID LEVEL LOW

MTBL1628

Is above displayed in self-diagnosis display items?

Yes	▶	GO TO 2.
No	▶	**INSPECTION END**

2	CHECK CONNECTOR

1. Disconnect the brake fluid level sensor connector E86 and ABS actuator and electric unit (control unit) connector E143 and check terminal for deformation, disconnection, looseness, and so on. If there is any malfunction condition, repair or replace terminal.
2. Securely reconnect connectors and perform self-diagnosis again.

OK or NG

OK	▶	Connector terminal contact is loose, damaged, open or shorted.
NG	▶	GO TO 3.

3	CHECK HARNESS BETWEEN THE BRAKE FLUID LEVEL SENSOR AND ABS ACTUATOR AND ELECTRIC UNIT (CONTROL UNIT)

1. Turn ignition switch OFF and disconnect the brake fluid level sensor connector E86, ABS actuator and electric unit (control unit) connectors E143.

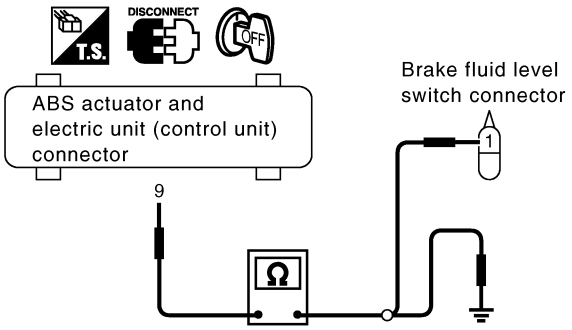

YBR375

2. Check continuity between the brake fluid level sensor connector E86 and ABS actuator and electric unit (control unit) connector E143 and ground.

ABS actuator and electric unit (control unit)	Brake fluid level sensor	Continuity
9 (Y/B)	1 (Y/B)	Yes
9 (Y/B)	Ground	No
Ground	2 (B)	Yes

MTBL1629

OK or NG

OK	▶	Connect connectors and perform an ABS actuator and electric unit (control unit) self-diagnosis.
NG	▶	If there is an open or short in harness, repair or replace harness.

Inspection 12 When "ST ANG SEN SIGNAL" Appears on Self-diagnostic Results Display

=NLBR0191

INSPECTION PROCEDURE

1	CHECK SELF-DIAGNOSTIC RESULTS (1)	
Check self-diagnostic results.		
Self-diagnostic results ST ANG SEN SIGNAL		
MTBL1630		
Does anything besides "ST ANG SEN SIGNAL" appear on self-diagnostic results display?		
Yes	▶	Inspect and repair the indicated items. Then perform self-diagnosis again.
No	▶	Adjust steering angle sensor neutral position. Then GO TO 2.

2	CHECK SELF-DIAGNOSTIC RESULTS (2)	
Turin ignition switch OFF, and ON to erase self-diagnostic results, and perform ABS actuator and electric unit (control unit) self-diagnosis again.		
Does anything appear on self-diagnostic results display?		
Yes	▶	Replace steering angle sensor. Then adjust neutral position and perform self-diagnosis again.
No	▶	**INSPECTION END**

Inspection 13 CAN Communication System

NLBR0192

INSPECTION PROCEDURE

1	CHECK SELF-DIAGNOSTIC RESULTS (1)	
Check self-diagnostic results.		
Self-diagnostic results CAN COMM CIRCUIT ST ANGLE SEN COM CIR		
MTBL1631		
Do self-diagnostic results indicate anything other than above?		
Yes	▶	Repair or replace the item indicated.
No	▶	GO TO 2.

2	CHECK CONNECTORS AND HARNESS BETWEEN ABS ACTUATOR AND ELECTRIC UNIT (CONTROL UNIT) AND STEERING ANGLE SENSOR

1. Turn ignition switch OFF. Disconnect battery ground cable.
2. Disconnect ABS actuator and electric unit (control unit) connector E143 and steering angle sensor connector E129.
3. Check for open circuit and short circuits in harness between ABS actuator and electric unit (control unit) harness connector E143 and steering angle sensor harness connector E129.
4. Check all control unit and sensor connectors, (Check for missing, bent, or collapsed terminals in terminal housing.)

OK or NG

OK	▶	GO TO 3.
NG	▶	Harness connector malfunction. Repair or replace. GO TO 3.

3	CHECK SELF-DIAGNOSTIC RESULTS (2)

1. Connect connectors to all control units and sensors.
2. Connect battery ground cable. Turn ignition switch ON.
3. Erase self-diagnostic results. Then start engine and perform self-diagnosis.

Does only "STEERING ANGLE SENSOR COMMUNICATION SYSTEM" appear on self-diagnostic results display?

Yes	▶	Replace spiral cable (steering angle sensor) and adjust steering angle sensor neutral position. Refer to BR-82.
No	▶	GO TO 4.

4	CAN COMMUNICATION SYSTEM CHECK

Check the data monitor item "CAN DIAG SUPPORT MNTR".

Normal Condition	Abnormal condition (example)
CAN COMM: OK	CAN COMM: OK
CAN CIRC 1: OK	CAN CIRC 1: UNKWN
CAN CIRC 2: OK	CAN CIRC 2: UNKWN
CAN CIRC 3: UNKWN	CAN CIRC 3: UNKWN
CAN CIRC 4: UNKWN	CAN CIRC 4: UNKWN
CAN CIRC 5: OK	CAN CIRC 5: UNKWN
CAN CIRC 6: UNKWN	CAN CIRC 6: UNKWN
CAN CIRC 7: UNKWN	CAN CIRC 7: UNKWN

MTBL1632

	▶	After printing out the monitor item, go to CAN system. Refer to EL-5.

Inspection 14 When "ESTM VEH SPD SIG" Appears on Self-diagnostic Results Display

=NLBR0194

INSPECTION PROCEDURE

1	CHECK SELF-DIAGNOSTIC RESULTS	
Conduct an A/T self-diagnostic results. Self-diagnostic results: ESTM VEH SPD SIG MTBL1634 **Does anything besides "ESTM VEH SPD SIG" appear on self-diagnostic results display?**		
Yes	▶	Check and repair the indicated items. Then perform self-diagnosis again.
No	▶	● Erase A/T self-diagnosis. **INSPECTION END**. **NOTE:** If there is no error about ABS actuator and electric unit (control unit), "ESTM VHE SPD SIG" may be displayed in A/T self-diagnosis depending on the timing of cranking.

Inspection 15 ESP OFF Indicator Lamp Does Not Illuminate.

NLBR0195

INSPECTION PROCEDURE

1	CHECK ESP OFF INDICATOR LAMP	
Disconnect ABS actuator and electric unit (control unit) connector E143. **Do ABS warning lamp and ESP OFF indicator lamp illuminate?**		
OK	▶	Malfunction in combination meter system. Inspect combination meter.
NG	▶	Malfunction of ABS actuator and electric unit (control unit). Repair or replace control unit.

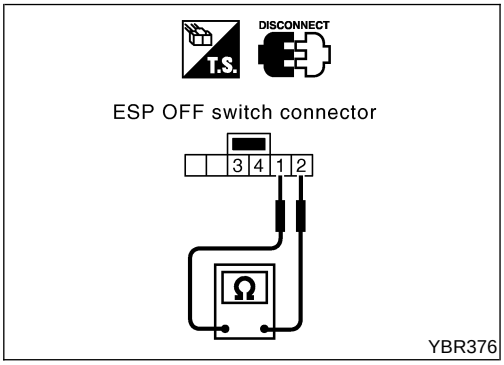

Component Inspection

NLBR0196

ESP OFF SWITCH

NLBR0196S01

- Turn ignition switch OFF, and disconnect the ESP OFF switch connector E121, and check continuity between terminals 1 and 2.

  1 - 2:

  Continuity should exist when pushing the switch.

  Continuity should not exist when releasing the switch.

Symptom 1 Excessive ABS Function Operation Frequency

NLBR0197

1	CHECK WHEEL SENSOR	
Check the following: ● Sensor mount and damage ● Sensor rotor mount and damage ● Sensor connector connection ● Sensor harness		
OK or NG		
OK	▶	GO TO 2.
NG	▶	Replace sensor or sensor rotor.

2	CHECK FRONT AND REAR AXLE	
Make sure there is no excessive play in front and rear axles.		
OK or NG		
OK	▶	GO TO 3.
NG	▶	Repair.

3	CHECK ABS WARNING LAMP DISPLAY	
Make sure ABS warning lamp turns OFF approximately 2 sec. after ignition switch is turned on or when driving.		
OK or NG		
OK	▶	Normal
NG	▶	Perform self-diagnosis. Refer to BR-112.

Symptom 2 Unexpected Pedal Reaction

NLBR0198

1	CHECK BRAKE PEDAL STROKE	
Check brake pedal stroke.		
Is the stroke too long?		
Yes	▶	● Bleed air from the brake piping. ● Check the brake pedal, brake booster, and master cylinder mount for play, looseness, and brake system for fluid leaks, etc. If any malfunctions are found, make repair.
No	▶	GO TO 2.

2	CHECK PEDAL FORCE	
Make sure that brake is effective with pedal depressed.		
Is pedal heavy, but affective?		
Yes	▶	Normal
No	▶	GO TO 3.

3	CHECK FUNCTION	
Disconnect ABS actuator and electric unit (control unit) connector E143 and make sure the braking force is sufficient when ABS is not operating. After the inspection, reconnect connector.		
OK or NG		
Yes	▶	GO TO 4.
No	▶	Check brake system.

4	CHECK ABS WARNING LAMP DISPLAY	
Make sure ABS warning lamp turns OFF approximately 2 sec. after ignition switch is turned ON or when driving.		
OK or NG		
Yes	▶	Normal
No	▶	GO TO 5.

5	CHECK WHEEL SENSOR	
Check the following: ● Sensor mount and damage ● Sensor rotor mount and damage ● Sensor connector connection ● Sensor harness		
OK or NG		
Yes	▶	Normal
No	▶	Replace sensor or sensor rotor.

Symptom 3 The Braking Distance Is Long

NLBR0199

CAUTION:

On slippery road surfaces, the stopping distance might be longer with ABS operating than when ABS is not operating.

1	CHECK FUNCTION	
Disconnect ABS actuator and electric unit (control unit) connector E143 to deactivate ABS. In this condition, check stopping distance. After inspection, connect connector.		
Is stopping distance still long?		
Yes	▶	● Bleed air from the brake piping. ● Check brake system.
No	▶	GO TO 2.

2	CHECK ABS WARNING LAMP DISPLAY	
Make sure ABS warning lamp turns OFF approximately 2 sec. after ignition switch is turned ON or when driving.		
OK or NG		
Yes	▶	Normal
No	▶	GO TO 3.

3	CHECK WHEEL SENSOR	
Check the following: ● Sensor mount and damage ● Sensor rotor mount and damage ● Sensor connector connection ● Sensor harness		
OK or NG		
Yes	▶	Normal
No	▶	Replace sensor or sensor rotor.

Symptom 4 ABS Function Does Not Operate

NLBR0200

CAUTION:
ABS does not operate when vehicle speed is 10 km/h (6 MPH) or less.

1	CHECK ABS WARNING LAMP DISPLAY	
Make sure ABS warning lamp turns OFF approximately 2 second after ignition switch is turned on or when driving.		
OK or NG		
OK	▶	GO TO 2.
NG	▶	Perform self-diagnosis. Refer to BR-112.

2	CHECK WHEEL SENSOR	
Check the following: ● Sensor mount and damage ● Sensor rotor mount and damage ● Sensor connector connection ● Sensor harness		
OK or NG		
OK	▶	Normal
NG	▶	Replace sensor or sensor rotor.

Symptom 5 Pedal Vibration or ABS Operation Sound Occurs

NLBR0201

CAUTION:
Under the following conditions, when brake pedal is lightly depressed (just place a foot on it), ABS is activated and vibration is felt. However, this is normal.

- **When shifting gears**
- **When driving on slippery road**
- **During cornering at high speed**
- **When passing over bumps or grooves**
- **When pulling away just after starting engine [at approximately 10 km/h (6 MPH) or higher]**

1	SYMPTOM CHECK 1	
Check if pedal vibration or operation sound occurs when engine is started.		
OK or NG		
OK	▶	Perform self-diagnosis. Refer to BR-112.
NG	▶	GO TO 2.

2	INSPECTION (1)	
Does vibration occur during normal parking? **CAUTION:** **In addition to activation for sudden braking, ABS may activate in conditions such as those listed below.** ● **Roads with low surface** ● **Turning at high speed** ● **Passing through gusts of wind**		
	OK or NG	
OK	▶	GO TO 3.
NG	▶	Normal

3	INSPECTION (2)	
Check for vibration when engine speed is increased while vehicle is stopped.		
	OK or NG	
OK	▶	GO TO 4.
NG	▶	● Normal **CAUTION:** **Vibration may occur when vehicle is stopped.**

4	INSPECTION (3)	
Check for vibration when switches of electrical components are operated.		
	OK or NG	
OK	▶	Check for any wireless devices, or antenna lead near control unit (including wiring).
NG	▶	GO TO 5.

5	CHECKING ABS WARNING LAMP INDICATION	
Make sure that ABS warning lamp turns on.		
	OK or NG	
OK	▶	Perform self-diagnosis. Refer to BR-112.
NG	▶	GO TO 6.

6	CHECK WHEEL SENSORS	
Check the following: ● Sensor mounting ● Sensor pick-up for iron chips ● Sensor connector engagement ● Wheel sensor circuit		
	OK or NG	
OK	▶	Normal
NG	▶	Repair wheel sensor and sensor rotor system.

Symptom 6 Vehicle Jerks During ESP/TCS/ABS Control

NLBR0202

1	CHECK ENGINE SPEED SIGNAL
Conduct CONSULT-II ABS actuator and electric unit (control unit) “Data Monitor”. **Is engine speed at idle 400 rpm or higher?**	
Yes ▶	Normal.
No ▶	GO TO 2.

2	CHECK ABS WARNING LAMP DISPLAY
Make sure ABS warning lamp turns OFF approximately 2 sec. after ignition switch is turned on or when driving. **OK or NG**	
OK ▶	GO TO 3.
NG ▶	Perform self-diagnosis. Refer to BR-112.

3	CHECK ECM SELF-DIAGNOSTIC RESULTS
Perform ECM self-diagnosis. **Are self-diagnosis items displayed?**	
Yes ▶	Check the corresponding items. Refer to EC-20, EC-554, EC-938 or EC-1252 in “Engine Control (EC section)”.
No ▶	GO TO 4.

4	CHECK A/T SELF-DIAGNOSTIC RESULTS
Perform A/T self-diagnosis. **OK or NG**	
OK ▶	GO TO 6.
NG ▶	Check the corresponding items. Refer to AT-35.

5	SELF-DIAGNOSTIC RESULTS INSPECTION 1
Perform self-diagnosis of ABS actuator and electric unit (control unit). **Are self-diagnosis items displayed?**	
Yes ▶	Check the corresponding items, make repairs, and perform ABS actuator and electric unit (control unit) self-diagnosis again.
No ▶	GO TO 7.

6	CHECK CONNECTOR
1. Disconnect ABS actuator and electric unit (control unit) E143 and the ECM connector, check terminals for deformation, disconnection, looseness, and so on. If there is an error, repair or replace connector. 2. Securely reconnect connector and perform self-diagnosis. **OK or NG**	
OK ▶	If connector terminal contact is loose, damaged, open or shorted, repair or replace connector terminal.
NG ▶	GO TO 7.

7	SELF-DIAGNOSTIC RESULTS INSPECTION 2	
Perform the self-diagnosis again.		
Are self-diagnosis items displayed?		
Yes	▶	Repair or replace any malfunction items.
No	▶	GO TO 8.

8	CHECK CIRCUIT BETWEEN ABS ACTUATOR AND ELECTRIC UNIT (CONTROL UNIT) AND ECM	
Check CAN communication system. Refer to BR-140.		
OK or NG		
OK	▶	**INSPECTION END**
NG	▶	Connect connectors, and perform ABS actuator and electric unit (control unit) self-diagnosis again.

Removal and Installation

NLBR0203

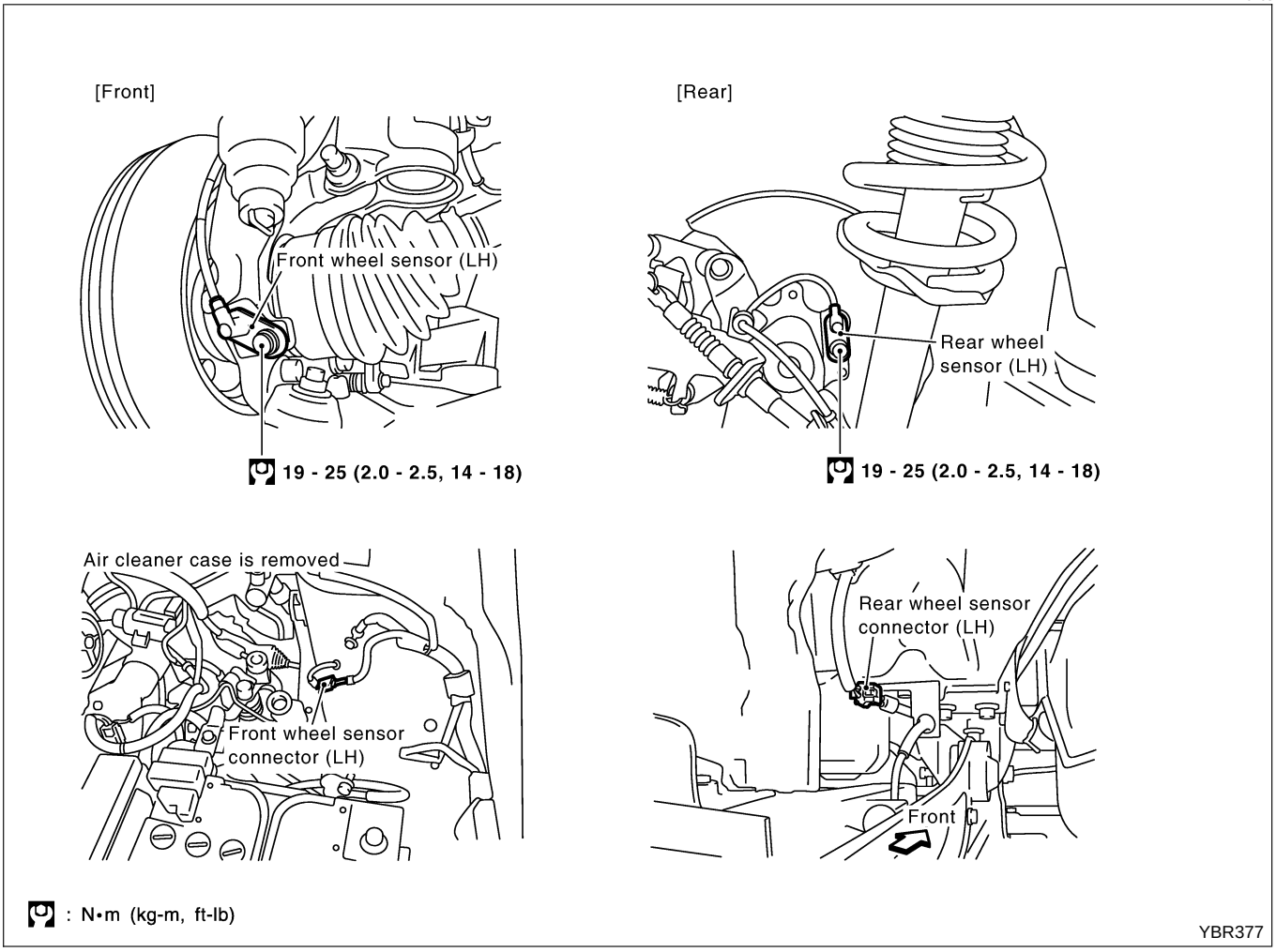

REMOVAL

NLBR0203S01

Pay attention to the following when removing wheel sensor.

CAUTION:

- **As much as possible, avoid rotating wheel sensor when removing it. Pull wheel sensors out without pulling on sensor harness.**
- **Take care to avoid damaging wheel sensor edges or rotor teeth. Remove wheel sensor first before removing front or rear wheel hub. This is to avoid damage to wheel sensor wiring and loss of sensor function.**

INSTALLATION

NLBR0203S02

Pay attention to the following when installing wheel sensor. Tighten installation bolts and nuts to the specified torques.

- When installing, make sure there is no foreign material such as iron chips on and in the mounting hole of the wheel sensor. Make sure no foreign material has been caught in the sensor rotor. Remove any foreign material and clean the mount.
- When installing wheel sensor, be sure to press rubber grommets in until they lock at locations shown above in figure. When installed, harness must not be twisted.

Removal and Installation

NLBR0204

REMOVAL

NLBR0204S01

Front

NLBR0204S0101

Sensor rotor cannot be disassembled. To replace sensor rotor, replace hub bearing assembly. Refer to AX-5 in AX section.

Rear

NLBR0204S0102

Sensor rotor cannot be disassembled. To replace sensor rotor, replace hub bearing assembly. Refer to AX-23 in AX section.

INSTALLATION

NLBR0204S02

Front

NLBR0204S0201

Sensor rotor cannot be disassembled. To replace sensor rotor, replace hub bearing assembly. Refer to AX-7 in AX section.

Rear

NLBR0204S0202

Sensor rotor cannot be disassembled. To replace sensor rotor, replace hub bearing assembly. Refer to AX-24 in AX section.

Removal and Installation

NLBR0205

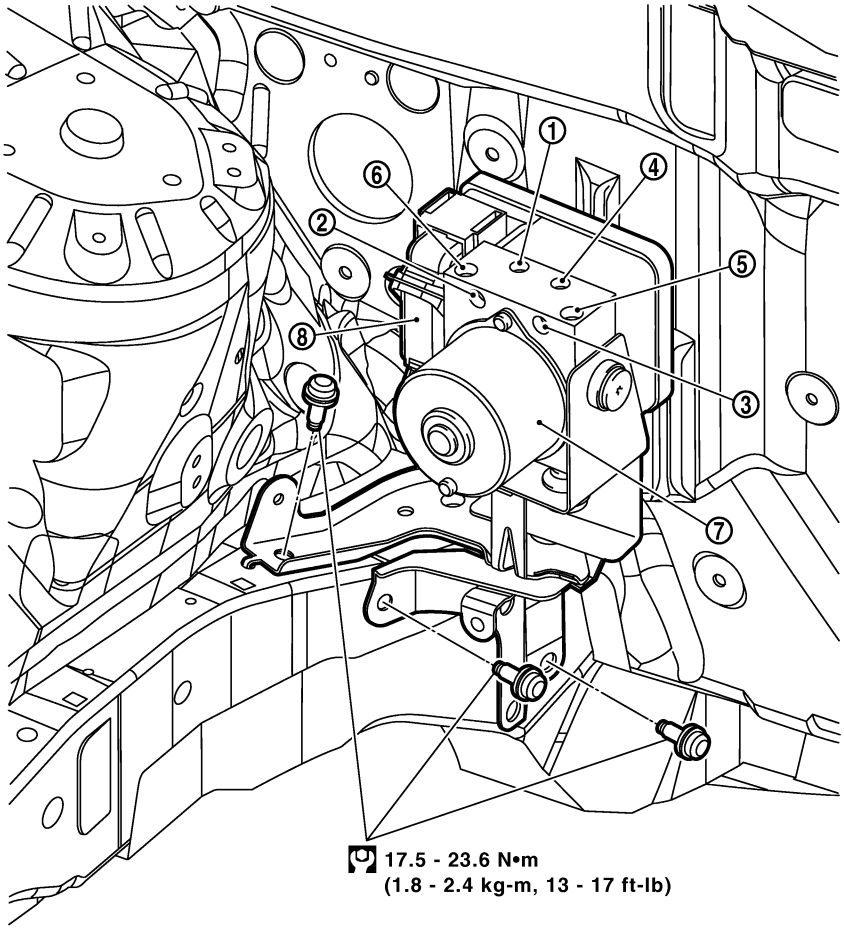

YBR378

1. To front left
2. To rear right
3. To rear left
4. To front right
5. From master cylinder secondary side
6. From master cylinder primary side
7. ABS actuator and electric unit (control unit)
8. Harness connector

Pay attention to the following when removing actuator.

CAUTION:

- **If the part number on the part number label (pasted on actuator upper surface) is the same, ESP/TCS/ABS actuator (integrated in control unit, part No. : 47660 *****) cannot be used on another vehicle.**
  If it is used on another vehicle, ABS warning lamp, SLIP indicator lamp, ESP OFF indicator lamp may turn ON or ESP/TCS/ABS may not operate normally.
  When replacing ESP/TCS/ABS actuator (integrated in control unit), must use new service parts.
- **Before servicing, disconnect battery cables.**
- **To remove brake tube, use flare nut wrench to prevent flare nuts and brake tube from being damaged. To install, use flare nut wrench (commercial service tool).**
- **Do not remove and install actuator by holding harness.**
- **After work is completed, bleed air from brake piping. Refer to BR-11.**

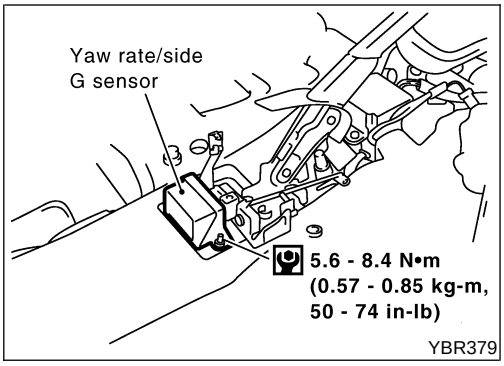

Removal and Installation

NLBR0206

REMOVAL

NLBR0206S01

1. Remove center console. Refer to BT-27.
2. Disconnect harness connector.
3. Remove installation nuts. Remove yaw rate/side G sensor.

CAUTION:

- **Do not drop or strike the yaw rate/side G sensor, because it has little endurance to impact.**
- **Do not use power tool etc., because Yaw rate/side G sensor is weak for the impact.**

INSTALLATION

NLBR0206S02

Install in the revers order of removal.

CAUTION:

- **Do not drop or strike the yaw rate/side G sensor, because it has little endurance to impact.**

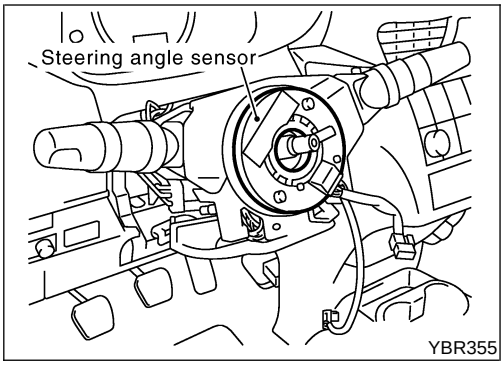

Removal and Installation

NLBR0207

Refer to ST-10.

NOTE:

Steering angle sensor is built into the spiral cable.

General Specifications

NLBR0077
Unit: mm (in)

Engine			QG18DE	YD22DDT	YD22DDTi
Front Brake	Brake model		CL25VCG		
	Cylinder bore diameter		57.2 (2.2529)		
	Pad Length × width × thickness		110.6 × 54.2 × 11.0 (4.35 × 2.13 × 0.433)		
	Rotor outer diameter × thickness		280 × 28 (11.02 × 1.10)		
Rear Brake	Brake model		CL11HDG (disc brake)		
	Cylinder bore diameter	Cam & Strut type	38 (1.496)		
		Ball & Ramp type	38.2 (1.504)		
	Pad Length × width × thickness		79.8 × 38.5 × 9.3 (3.142 × 1.516 × 0.37)		
	Rotor outer diameter × thickness		278 × 10 (10.94 × 0.39)		
Master cylinder	Cylinder bore diameter		23.81 (15/16)		
Brake booster	Booster model		S255	M215T	
	Diaphragm	Primary	255 (10.04)	230 (9.06)	
		Secondary	—	205 (8.07)	
Specified brake fluid			DOT 4		

Disc Brake

NLBR0078
Unit: mm (in)

Brake model		CL25VCG	CL11HDG
Pad wear limit	Minimum thickness	2.0 (0.078)	2.0 (0.079)
Rotor repair limit	Maximum runout	0.07 (0.0028)	0.07 (0.0028)
	Minimum thickness	26.0 (1.024)	9 (0.35)

Brake Pedal

NLBR0079
Unit: mm (in)

Free height “H”*	LHD	M/T	155.9 - 164.8 (6.14 - 6.49)
		A/T	164.7 - 173.9 (6.48 - 6.85)
	RHD	M/T	154.8 - 164.6 (6.09 - 6.48)
		A/T	164.0 - 173.4 (6.46 - 6.83)
Clearance “C” between pedal stopper and threaded end of stop lamp switch or brake switch			0.75 - 2.00 (0.0295 - 0.0787)

*: Measured from surface of dash panel to surface of pedal pad

Parking Brake

NLBR0080

Type	Center lever
Number of notches [under force of 196 N (20 kg, 44 lb)]	5 - 6
Number of notches when warning lamp switch comes on	1