SECTION LAN

LAN SYSTEM

CONTENTS

CAN FUNDAMENTAL

PRECAUTION 3

PRECAUTIONS 3
- Precautions for Trouble Diagnosis 3
- Precautions for Harness Repair 3

SYSTEM DESCRIPTION 4

CAN COMMUNICATION SYSTEM 4
- System Description 4
- System Diagram 4
- CAN Communication Control Circuit 5

DIAG ON CAN 6
- Description 6
- System Diagram 6

TROUBLE DIAGNOSIS 7
- Condition of Error Detection 7
- Symptom When Error Occurs in CAN Communication System 7
- CAN Diagnosis with CONSULT 10
- Self-Diagnosis 10
- CAN Diagnostic Support Monitor 10
- How to Use CAN Communication Signal Chart 12

BASIC INSPECTION 13

DIAGNOSIS AND REPAIR WORKFLOW 13
- Trouble Diagnosis Flow Chart 13
- Trouble Diagnosis Procedure 13

CAN

HOW TO USE THIS MANUAL 18

HOW TO USE THIS SECTION 18
- Caution 18
- Abbreviation List 18

PRECAUTION 19

PRECAUTIONS 19
- Precaution for Supplemental Restraint System (SRS) "AIR BAG" and "SEAT BELT PRE-TENSIONER" 19
- Precautions for Removing of Battery Terminal 19
- Precautions for Trouble Diagnosis 19
- Precautions for Harness Repair 20

BASIC INSPECTION 21

DIAGNOSIS AND REPAIR WORKFLOW 21
- Interview Sheet 21

SYSTEM DESCRIPTION 22

CAN COMMUNICATION SYSTEM 22
- CAN System Specification Chart 22
- CAN Communication Signal Chart 22

DTC/CIRCUIT DIAGNOSIS 25

CAN COMMUNICATION SYSTEM 25
- Component Parts Location 25
- Wiring Diagram - CAN SYSTEM - 26

MALFUNCTION AREA CHART 30
- Main Line 30
- Branch Line 30
- Short Circuit 30

MAIN LINE BETWEEN IPDM-E AND DLC CIRCUIT 31
- Diagnosis Procedure 31

ECM BRANCH LINE CIRCUIT 32
- Diagnosis Procedure 32

ABS BRANCH LINE CIRCUIT 33
- Diagnosis Procedure 33

IPDM-E BRANCH LINE CIRCUIT 34
- Diagnosis Procedure 34

TCM BRANCH LINE CIRCUIT 35
Diagnosis Procedure 35

A-BAG BRANCH LINE CIRCUIT 36
Diagnosis Procedure 36

DLC BRANCH LINE CIRCUIT 37
Diagnosis Procedure 37

EPS BRANCH LINE CIRCUIT 38
Diagnosis Procedure 38

M&A BRANCH LINE CIRCUIT 39
Diagnosis Procedure 39

STRG BRANCH LINE CIRCUIT 40
Diagnosis Procedure 40

BCM BRANCH LINE CIRCUIT 41
Diagnosis Procedure 41

CAN COMMUNICATION CIRCUIT 42
Diagnosis Procedure 42

CAN SYSTEM (TYPE 1)

DTC/CIRCUIT DIAGNOSIS 44

MAIN LINE BETWEEN IPDM-E AND DLC CIRCUIT 44
Diagnosis Procedure 44

ECM BRANCH LINE CIRCUIT 45
Diagnosis Procedure 45

ABS BRANCH LINE CIRCUIT 46
Diagnosis Procedure 46

IPDM-E BRANCH LINE CIRCUIT 47
Diagnosis Procedure 47

A-BAG BRANCH LINE CIRCUIT 48
Diagnosis Procedure 48

DLC BRANCH LINE CIRCUIT 49
Diagnosis Procedure 49

EPS BRANCH LINE CIRCUIT 50
Diagnosis Procedure 50

M&A BRANCH LINE CIRCUIT 51
Diagnosis Procedure 51

STRG BRANCH LINE CIRCUIT 52
Diagnosis Procedure 52

BCM BRANCH LINE CIRCUIT 53
Diagnosis Procedure 53

CAN COMMUNICATION CIRCUIT 54
Diagnosis Procedure 54

CAN SYSTEM (TYPE 2)

DTC/CIRCUIT DIAGNOSIS 56

MAIN LINE BETWEEN IPDM-E AND DLC CIRCUIT 56
Diagnosis Procedure 56

ECM BRANCH LINE CIRCUIT 57
Diagnosis Procedure 57

ABS BRANCH LINE CIRCUIT 58
Diagnosis Procedure 58

IPDM-E BRANCH LINE CIRCUIT 59
Diagnosis Procedure 59

TCM BRANCH LINE CIRCUIT 60
Diagnosis Procedure 60

A-BAG BRANCH LINE CIRCUIT 61
Diagnosis Procedure 61

DLC BRANCH LINE CIRCUIT 62
Diagnosis Procedure 62

EPS BRANCH LINE CIRCUIT 63
Diagnosis Procedure 63

M&A BRANCH LINE CIRCUIT 64
Diagnosis Procedure 64

STRG BRANCH LINE CIRCUIT 65
Diagnosis Procedure 65

BCM BRANCH LINE CIRCUIT 66
Diagnosis Procedure 66

CAN COMMUNICATION CIRCUIT 67
Diagnosis Procedure 67

PRECAUTION

PRECAUTIONS

Precautions for Trouble Diagnosis

INFOID:0000000009949468

CAUTION:
- **Never apply 7.0 V or more to the measurement terminal.**
- **Use a tester with open terminal voltage of 7.0 V or less.**
- **Turn the ignition switch OFF and disconnect the battery cable from the negative terminal when checking the harness.**

Precautions for Harness Repair

INFOID:0000000009949469

- Solder the repaired area and wrap tape around the soldered area.
  NOTE:
  A fray of twisted lines must be within 110 mm (4.33 in).

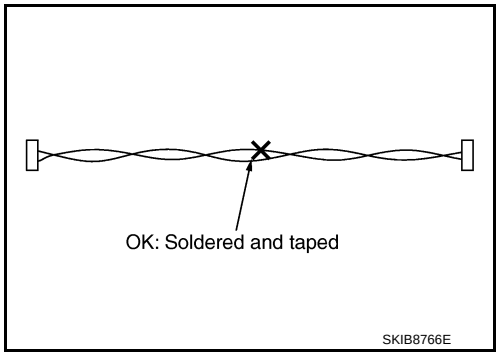

- Bypass connection is never allowed at the repaired area.
  NOTE:
  Bypass connection may cause CAN communication error. The spliced wire becomes separated and the characteristics of twisted line are lost.

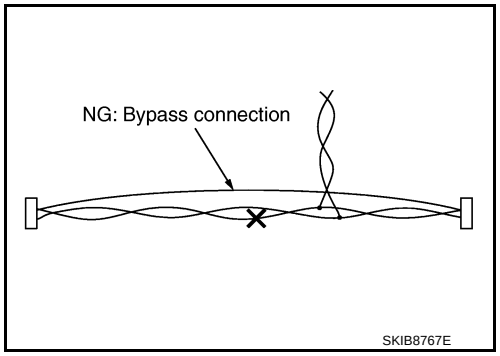

- Replace the applicable harness as an assembly if error is detected on the shield lines of CAN communication line.

SYSTEM DESCRIPTION

CAN COMMUNICATION SYSTEM

System Description

INFOID:0000000009949470

- CAN communication is a multiplex communication system. This enables the system to transmit and receive large quantities of data at high speed by connecting control units with two communication lines (CAN-H and CAN-L).
- Control units on the CAN network transmit signals using the CAN communication control circuit. They receive only necessary signals from other control units to operate various functions.
- CAN communication lines adopt twisted-pair line style (two lines twisted) for noise immunity.

System Diagram

INFOID:0000000009949471

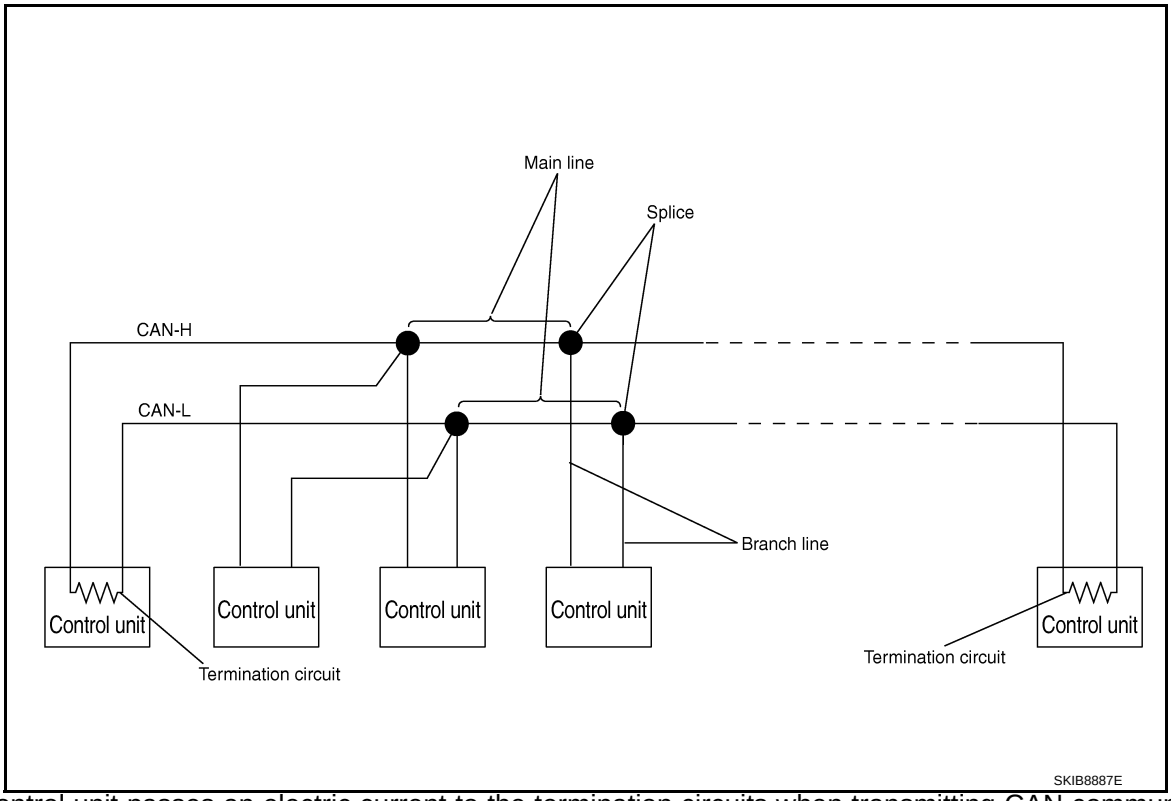

Each control unit passes an electric current to the termination circuits when transmitting CAN communication signal. The termination circuits produce an electrical potential difference between CAN-H and CAN-L. CAN communication system transmits and receives CAN communication signals by the potential difference.

Component	Description
Main line	CAN communication line between splices
Branch line	CAN communication line between splice and a control unit
Splice	A point connecting a branch line with a main line
Termination circuit	Refer to LAN-5, "CAN Communication Control Circuit".

CAN Communication Control Circuit

INFOID:0000000009949472

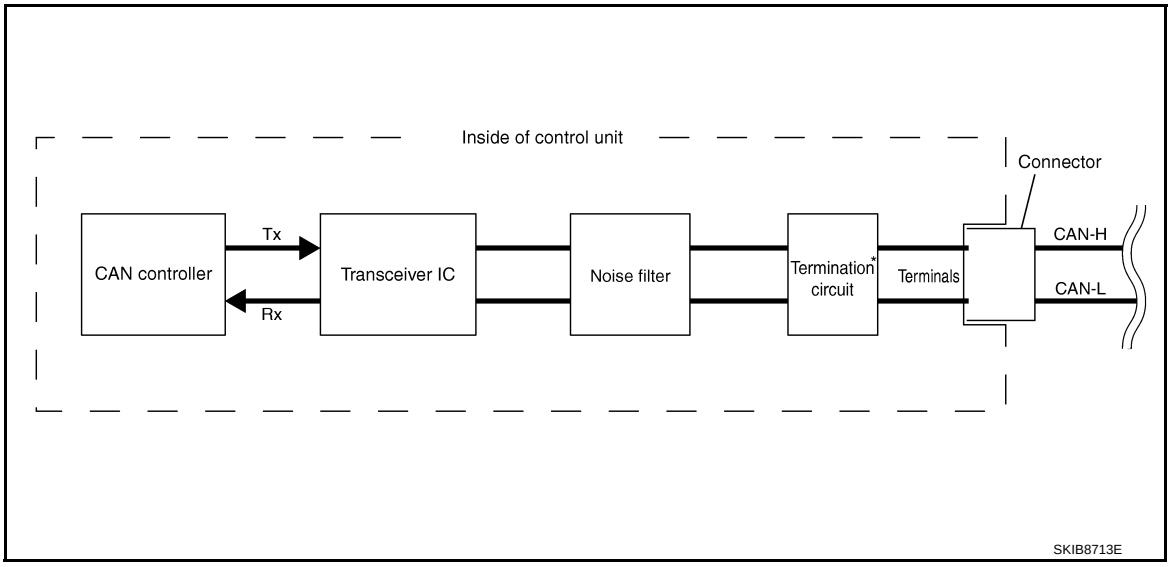

Component	System description
CAN controller	It controls CAN communication signal transmission and reception, error detection, etc.
Transceiver IC	It converts digital signal into CAN communication signal, and CAN communication signal into digital signal.
Noise filter	It eliminates noise of CAN communication signal.
Termination circuit* (Resistance of approx. 120 Ω)	It produces potential difference.

*: These are the only control units wired with both ends of CAN communication system.

DIAG ON CAN

Description

INFOID:0000000009949473

"Diag on CAN" is a diagnosis using CAN communication instead of previous DDL1 and DDL2 communication lines, between control units and diagnosis unit.

System Diagram

INFOID:0000000009949474

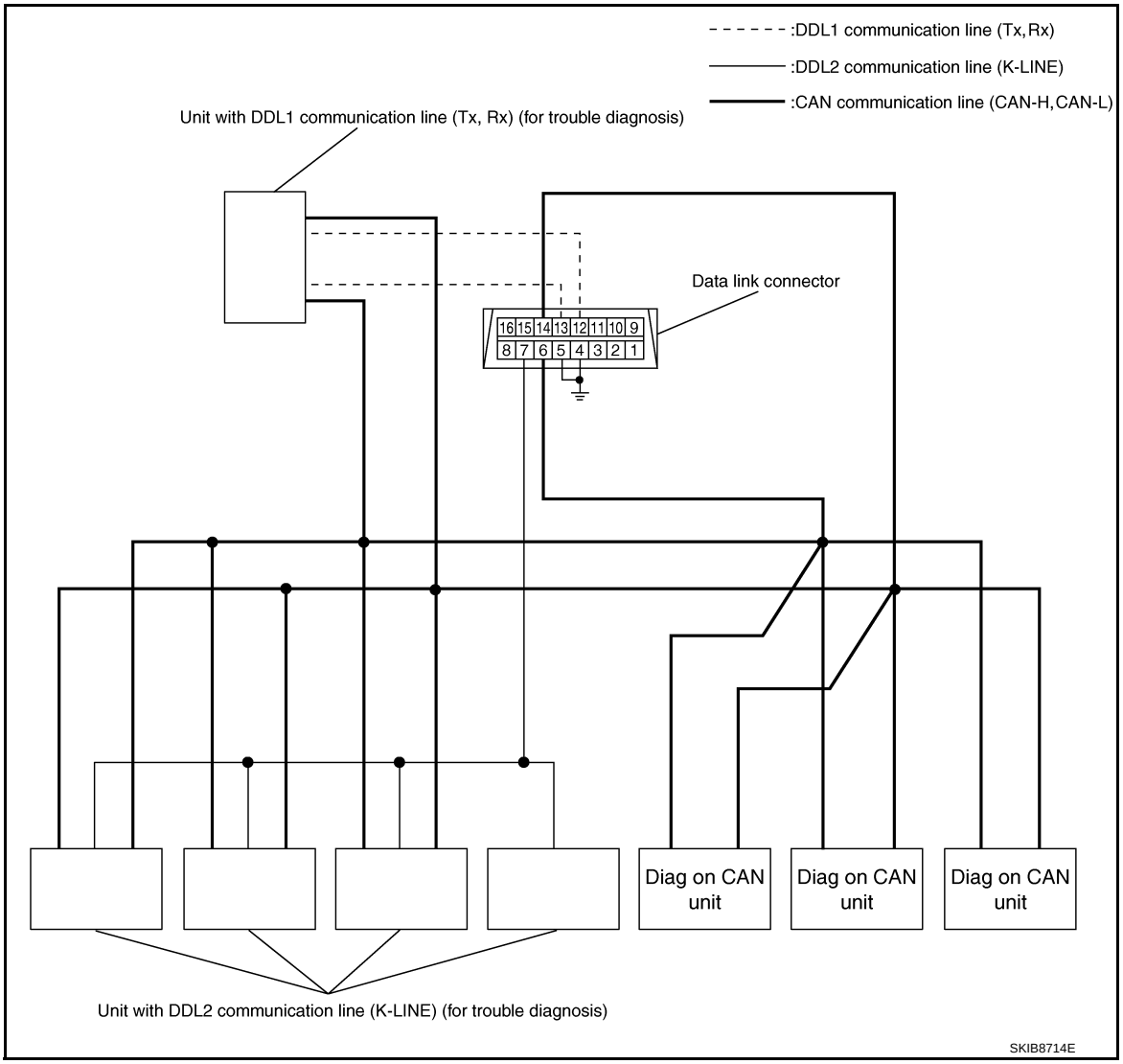

Name	Harness	Description
DDL1	Tx Rx	It is used for trouble diagnosis. (CAN-H and CAN-L are used for controlling)
DDL2	K-LINE	It is used for trouble diagnosis. (CAN-H and CAN-L are used for controlling)
Diag on CAN	CAN-H CAN-L	It is used for trouble diagnosis and control.

TROUBLE DIAGNOSIS

Condition of Error Detection

INFOID:0000000009949475

DTC (e.g. U1000 and U1001) of CAN communication is indicated on SELF-DIAG RESULTS on CONSULT if a CAN communication signal is not transmitted or received between units for 2 seconds or more.

CAN COMMUNICATION SYSTEM ERROR

- CAN communication line open (CAN-H, CAN-L, or both)
- CAN communication line short (ground, between CAN communication lines, other harnesses)
- Error of CAN communication control circuit of the unit connected to CAN communication line

WHEN DTC OF CAN COMMUNICATION IS INDICATED EVEN THOUGH CAN COMMUNICATION SYSTEM IS NORMAL

- Removal/installation of parts: Error may be detected when removing and installing CAN communication unit and related parts while turning the ignition switch ON. (A DTC except for CAN communication may be detected.)
- Fuse blown out (removed): CAN communication of the unit may cease.
- Voltage drop: Error may be detected if voltage drops due to discharged battery when turning the ignition switch ON (Depending on the control unit which carries out CAN communication).
- Error may be detected if the power supply circuit of the control unit, which carries out CAN communication, malfunctions (Depending on the control unit which carries out CAN communication).
- Error may be detected if reprogramming is not completed normally.

CAUTION:

CAN communication system is normal if DTC of CAN communication is indicated on SELF-DIAG RESULTS of CONSULT under the above conditions. Erase the memory of the self-diagnosis of each unit.

Symptom When Error Occurs in CAN Communication System

INFOID:0000000009949476

In CAN communication system, multiple units mutually transmit and receive signals. Each unit cannot transmit and receive signals if any error occurs on CAN communication line. Under this condition, multiple control units related to the root cause malfunction or go into fail-safe mode.

ERROR EXAMPLE

NOTE:

- Each vehicle differs in symptom of each unit under fail-safe mode and CAN communication line wiring.
- Refer to LAN-18, "Abbreviation List" for the unit abbreviation.

Example: TCM branch line open circuit

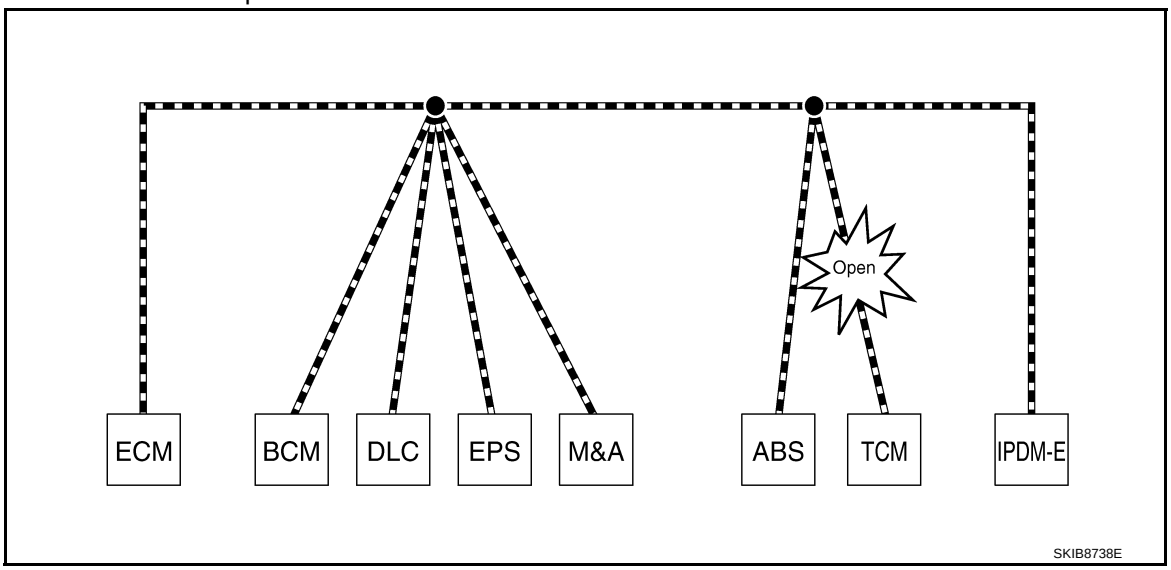

Unit name	Symptom
ECM	Engine torque limiting is affected, and shift harshness increases.
BCM	Reverse warning chime does not sound.

Unit name	Symptom
EPS control unit	Normal operation.
Combination meter	• Shift position indicator and OD OFF indicator turn OFF. • Warning lamps turn ON.
ABS actuator and electric unit (control unit)	Normal operation.
TCM	No impact on operation.
IPDM E/R	Normal operation.

Example: Data link connector branch line open circuit

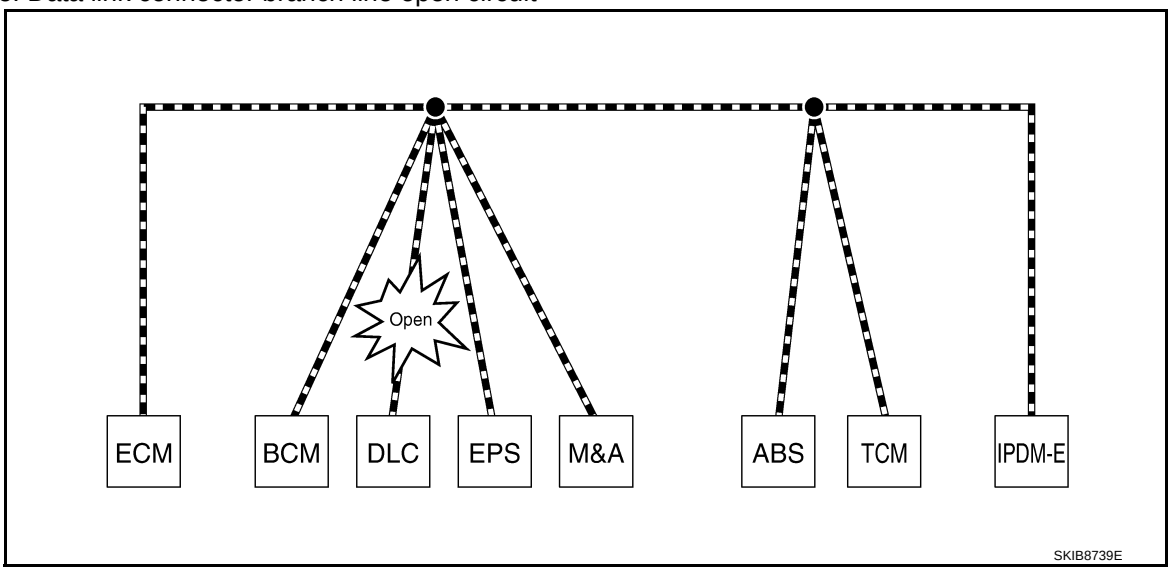

Unit name	Symptom
ECM	Normal operation.
BCM	
EPS control unit	
Combination meter	
ABS actuator and electric unit (control unit)	
TCM	
IPDM E/R	

NOTE:
- When data link connector branch line is open, transmission and reception of CAN communication signals are not affected. Therefore, no symptoms occur. However, be sure to repair malfunctioning circuit.
- The model (all units on CAN communication system are Diag on CAN) cannot perform CAN diagnosis with CONSULT if the following error occurs. The error is judged by the symptom.

Error	Difference of symptom
Data link connector branch line open circuit	Normal operation.
CAN-H, CAN-L harness short-circuit	Most of the units which are connected to the CAN communication system enter fail-safe mode or are deactivated.

Example: Main Line Between Data Link Connector and ABS Actuator and Electric Unit (Control Unit) Open Circuit

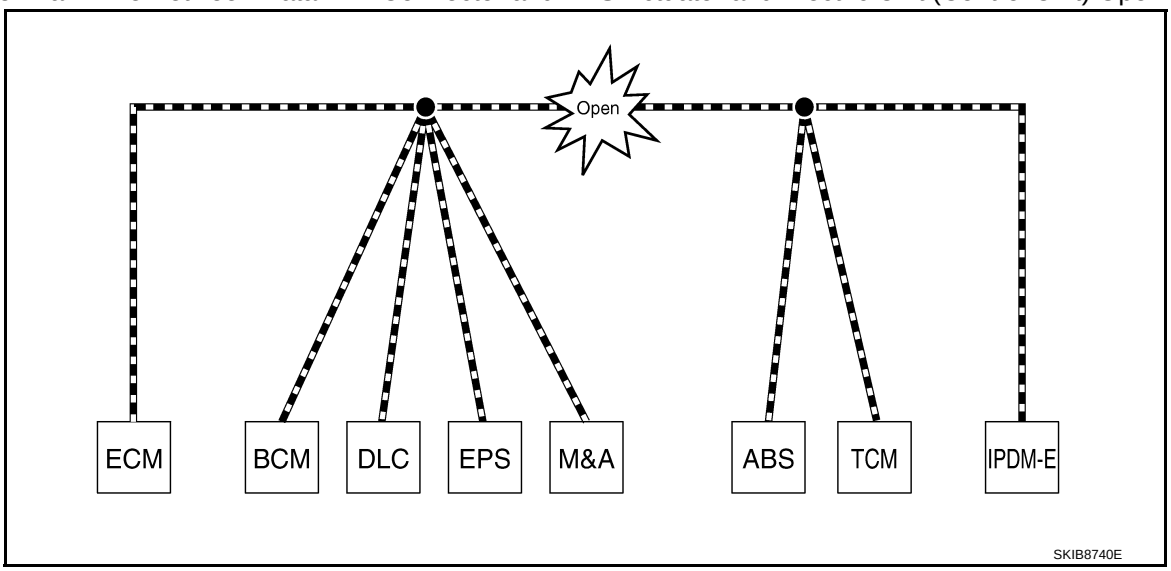

Unit name	Symptom
ECM	Engine torque limiting is affected, and shift harshness increases.
BCM	• Reverse warning chime does not sound. • The front wiper moves under continuous operation mode even though the front wiper switch being in the intermittent position.
EPS control unit	The steering effort increases.
Combination meter	• The shift position indicator and OD OFF indicator turn OFF. • The speedometer is inoperative. • The odo/trip meter stops.
ABS actuator and electric unit (control unit)	Normal operation.
TCM	No impact on operation.
IPDM E/R	When the ignition switch is ON, • The headlamps (Lo) turn ON. • The cooling fan continues to rotate.

Example: CAN-H, CAN-L Harness Short Circuit

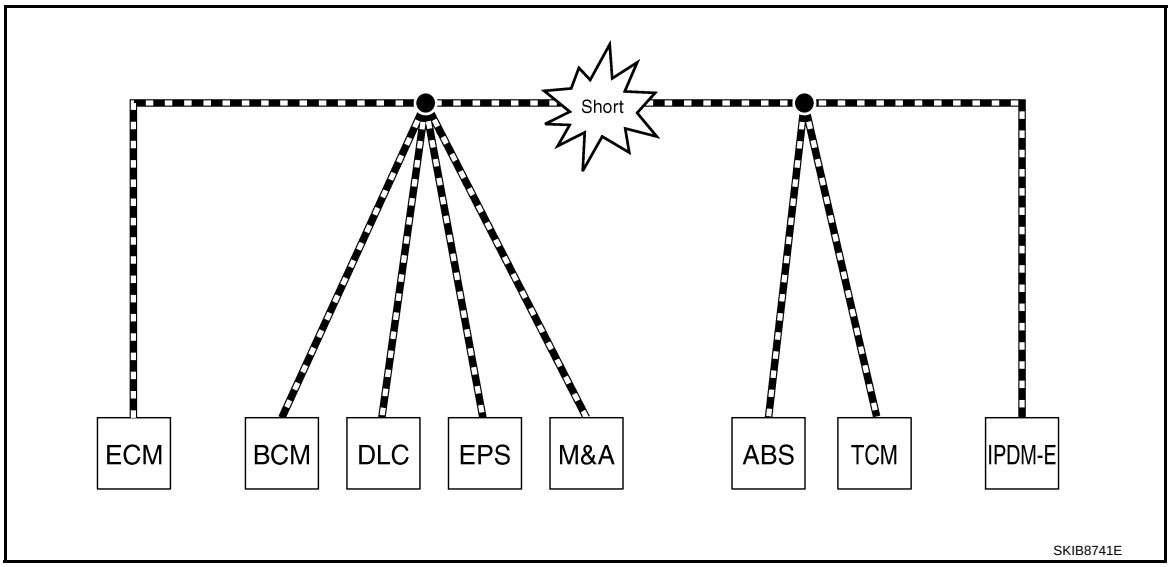

Unit name	Symptom
ECM	• Engine torque limiting is affected, and shift harshness increases. • Engine speed drops.
BCM	• Reverse warning chime does not sound. • The front wiper moves under continuous operation mode even though the front wiper switch being in the intermittent position. • The room lamp does not turn ON. • The engine does not start (if an error or malfunction occurs while turning the ignition switch OFF.) • The steering lock does not release (if an error or malfunction occurs while turning the ignition switch OFF.)
EPS control unit	The steering effort increases.
Combination meter	• The tachometer and the speedometer do not move. • Warning lamps turn ON. • Indicator lamps do not turn ON.
ABS actuator and electric unit (control unit)	Normal operation.
TCM	No impact on operation.
IPDM E/R	When the ignition switch is ON, • The headlamps (Lo) turn ON. • The cooling fan continues to rotate.

CAN Diagnosis with CONSULT

INFOID:0000000009949477

CAN diagnosis on CONSULT extracts the root cause by receiving the following information.
- Response to the system call
- Control unit diagnosis information
- Self-diagnosis
- CAN diagnostic support monitor

Self-Diagnosis

INFOID:0000000009949478

If communication signals cannot be transmitted or received among units communicating via CAN communication line, CAN communication-related DTC is displayed on the CONSULT “Self Diagnostic Result” screen.
NOTE:
The following table shows examples of CAN communication-related DTC. For other DTC, refer to the applicable sections.

DTC	Self-diagnosis item (CONSULT indication)	DTC detection condition		Inspection/Action
U1000	CAN COMM CIRCUIT	ECM	When ECM is not transmitting or receiving CAN communication signal of OBD (emission-related diagnosis) for 2 seconds or more.	Start the inspection. Refer to the applicable section of the indicated control unit.
		Except for ECM	When a control unit (except for ECM) is not transmitting or receiving CAN communication signal for 2 seconds or more.	
U1001	CAN COMM CIRCUIT	When ECM is not transmitting or receiving CAN communication signal other than OBD (emission-related diagnosis) for 2 seconds or more.		
U1002	SYSTEM COMM	When a control unit is not transmitting or receiving CAN communication signal for 2 seconds or less.		
U1010	CONTROL UNIT(CAN)	When an error is detected during the initial diagnosis for CAN controller of each control unit.		Replace the control unit indicating “U1010”.

CAN Diagnostic Support Monitor

INFOID:0000000009949479

MONITOR ITEM (CONSULT)

Example: CAN DIAG SUPPORT MNTR indication

Without PAST

BCM		
MONITOR ITEM	PRESENT	PAST
INITIAL DIAG	OK	-
TRANSMIT DIAG	OK	-
ECM	OK	-
METER/M&A	OK	-
TCM	OK	-
IPDM E/R	OK	-
I-KEY	OK	-

With PAST

ENGINE		
MONITOR ITEM	PRESENT	PAST
TRANSMIT DIAG	OK	OK
VDC/TCS/ABS	OK	5
METER/M&A	Not diagnosed	-
BCM/SEC	OK	OK
ICC	Not diagnosed	-
HVAC	Not diagnosed	-
TCM	OK	OK
EPS	OK	OK
IPDM E/R	OK	5
e4WD	Not diagnosed	-
AWD/4WD	Not diagnosed	-

JSMIA0964GB

Without PAST

Item	PRESENT	Description
Initial diagnosis	OK	Normal at present
	NG	Control unit error (Except for some control units)
Transmission diagnosis	OK	Normal at present
	UNKWN	Unable to transmit signals for 2 seconds or more.
		Diagnosis not performed
Control unit name (Reception diagnosis)	OK	Normal at present
	UNKWN	Unable to receive signals for 2 seconds or more.
		Diagnosis not performed
		No control unit for receiving signals. (No applicable optional parts)

With PAST

Item	PRESENT	PAST	Description
Transmission diagnosis	OK	OK	Normal at present and in the past
		1 – 39	Normal at present, but unable to transmit signals for 2 seconds or more in the past. (The number indicates the number of ignition switch cycles from OFF to ON.)
	UNKWN	0	Unable to transmit signals for 2 seconds or more at present.
Control unit name (Reception diagnosis)	OK	OK	Normal at present and in the past
		1 – 39	Normal at present, but unable to receive signals for 2 seconds or more in the past. (The number indicates the number of ignition switch cycles from OFF to ON.)
	UNKWN	0	Unable to receive signals for 2 seconds or more at present.
	Not diagnosed	–	Diagnosis not performed.
			No control unit for receiving signals. (No applicable optional parts)

MONITOR ITEM (ON-BOARD DIAGNOSIS)

NOTE:

For some models, CAN communication diagnosis result is received from the vehicle monitor.

Example: Vehicle Display

Item	Result indicated	Error counter	Description
CAN_COMM (Initial diagnosis)	OK	0	Normal at present
	NG	1 – 50	Control unit error (The number indicates how many times diagnosis has been run.)
CAN_CIRC_1 (Transmission diagnosis)	OK	0	Normal at present
	UNKWN	1 – 50	Unable to transmit for 2 seconds or more at present. (The number indicates how many times diagnosis has been run.)
CAN_CIRC_2 – 9 (Reception diagnosis of each unit)	OK	0	Normal at present
	UNKWN	1 – 50	Unable to transmit for 2 seconds or more at present. (The number indicates how many times diagnosis has been run.)
			Diagnosis not performed.
			No control unit for receiving signals. (No applicable optional parts)

How to Use CAN Communication Signal Chart

INFOID:0000000009949480

The CAN communication signal chart lists the signals needed for trouble diagnosis. It is useful for detecting the root cause by finding a signal related to the symptom, and by checking transmission and reception unit.

Example: Tachometer does not move even though the engine rotates.

T: Transmit R: Receive

Signal name/Connecting unit	ECM	BCM	M&A	STRG	ABS	IPDM-E
A/C compressor feedback signal	T		R			
A/C compressor request signal	T					R
Accelerator pedal position signal	T				R	
Cooling fan motor operation signal	T					R
Engine coolant temperature signal	T		R			
Engine speed signal	T		R		R	
Fuel consumption monitor signal	T		R			
Malfunction indicator lamp signal	T		R			
A/C switch signal	R	T				
Ignition switch signal		T				R
Sleep/wake up signal		T	R			R

No communication between ECM and M&A.

It indicates that an error occurs between ECM and M&A (Shaded area).

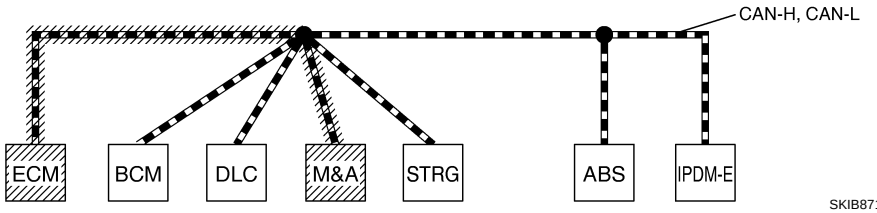

SKIB8715E

BASIC INSPECTION

DIAGNOSIS AND REPAIR WORKFLOW

Trouble Diagnosis Flow Chart

INFOID:0000000009949481

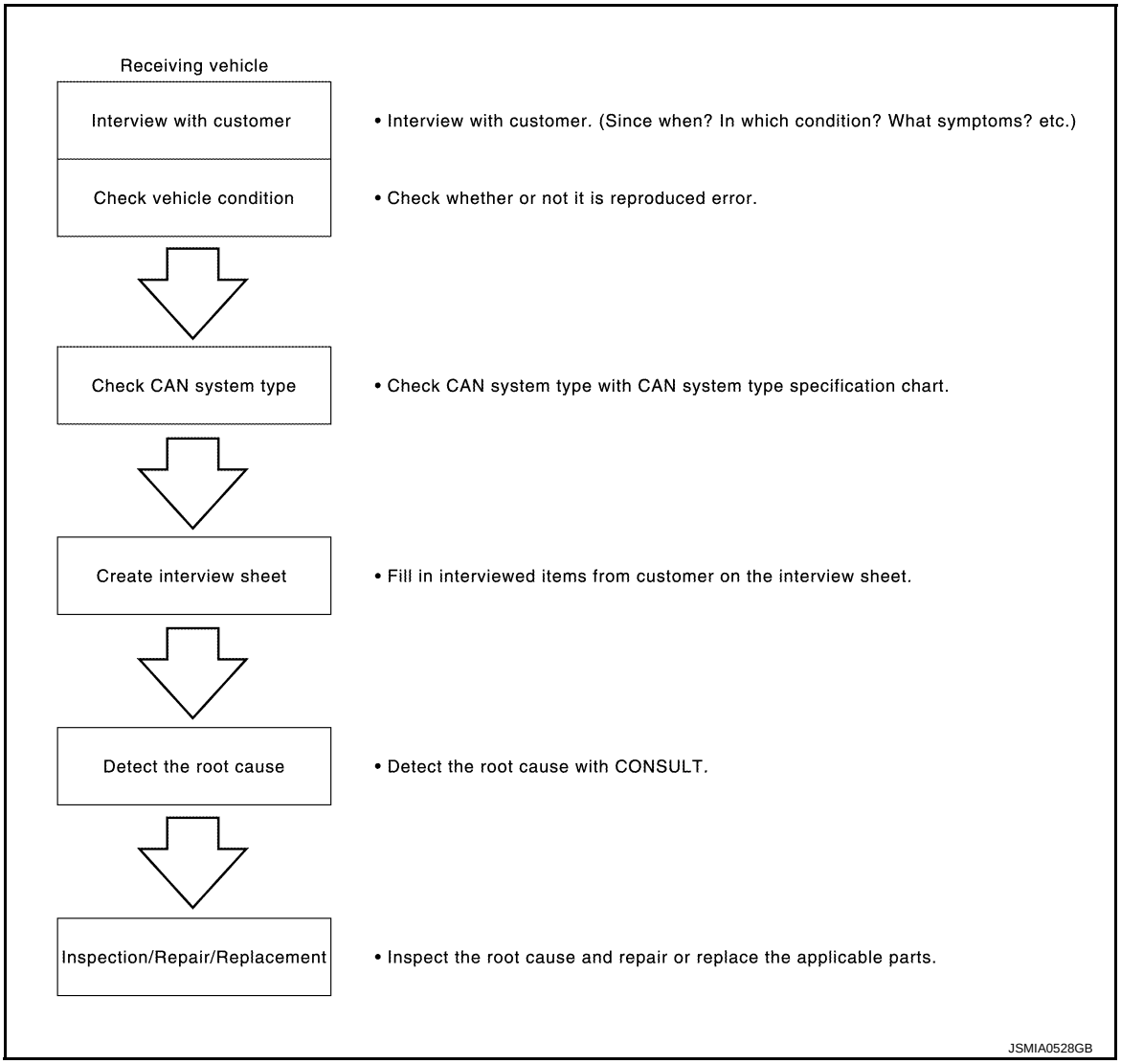

Trouble Diagnosis Procedure

INFOID:0000000009949482

INTERVIEW WITH CUSTOMER

Interview with the customer is important to detect the root cause of CAN communication system errors and to understand vehicle condition and symptoms for proper trouble diagnosis.

Points in interview
- What: Parts name, system name
- When: Date, Frequency
- Where: Road condition, Place
- In what condition: Driving condition/environment
- Result: Symptom

NOTE:
- Check normal units as well as error symptoms.
- Example: Circuit between ECM and the combination meter is judged normal if the customer indicates tachometer functions normally.
- When a CAN communication system error is present, multiple control units may malfunction or go into fail-safe mode.

- Indication of the combination meter is important to detect the root cause because it is the most obvious to the customer, and it performs CAN communication with many units.

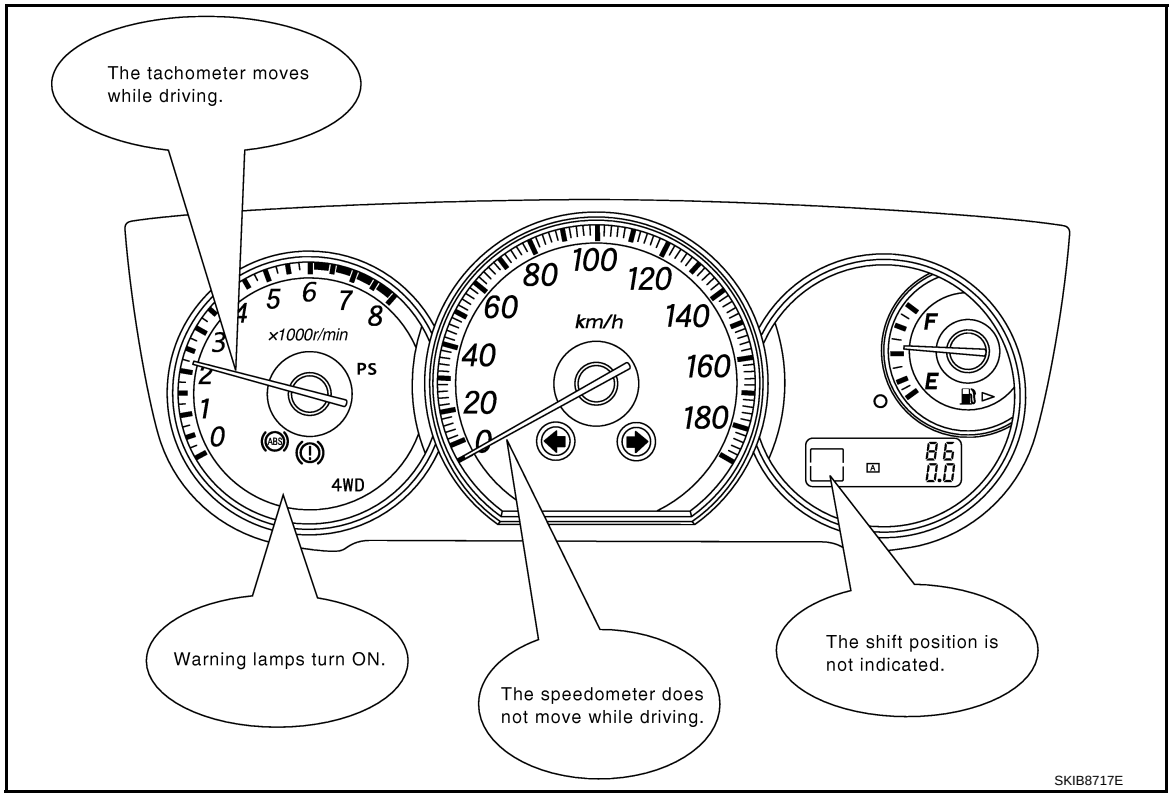

INSPECTION OF VEHICLE CONDITION

Check whether the symptom is reproduced or not.

NOTE:

Do not turn the ignition switch OFF or disconnect the battery cable while reproducing the error. The error may temporarily correct itself, making it difficult to determine the root cause.

CHECK OF CAN SYSTEM TYPE (HOW TO USE CAN SYSTEM TYPE SPECIFICATION CHART)

Determine CAN system type based on vehicle equipment.

NOTE:

- This chart is used if CONSULT does not automatically recognize CAN system type.
- There are two styles for CAN system type specification charts. Depending on the number of available system types, either style A or style B may be used.

CAN System Type Specification Chart (Style A)

NOTE:

CAN system type is easily checked with the vehicle equipment identification information shown in the chart.

Example:
Vehicle is equipped as follows: Wagon, AWD, VQ35DE, CVT, VDC, and Intelligent Key system. (shows an example of CAN system type.)

CAN System Specification Chart
Determine CAN system type from the following specification chart.

Body type	Wagon					
Axle	2WD				AWD	
Engine	QR25DE		VQ35DE			
Transmission	A/T		CVT			
Brake control	ABS				VDC	
Intelligent Key system		×		×		×
CAN system type	1	2	3	4	5	6
CAN communication signal chart	XX-XX. “TYPE 1/TYPE 2”		XX-XX. “TYPE 3/TYPE 4”		XX-XX. “TYPE 5/TYPE 6”	

×: Applicable

Check the vehicle equipment with the vehicle identification number plate.

Check the vehicle equipment.

The number indicates the CAN system type of the vehicle.

VEHICLE EQUIPMENT IDENTIFICATION INFORMATION
NOTE:
Check CAN system type from the vehicle shape and equipment.

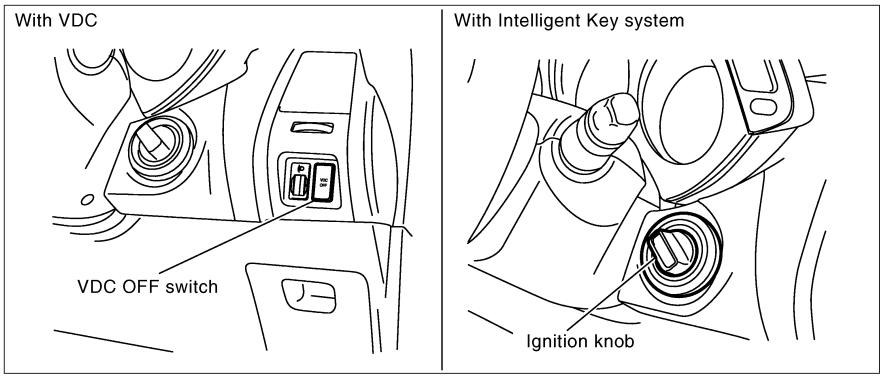

In the above example,
- Checking VDC OFF switch leads to judge whether or not VDC is equipped.
- Checking the ignition knob leads to judge whether or not Intelligent Key system is equipped.

For the above case, CAN system type is “6”.

JSMIA0017GB

CAN System Type Specification Chart (Style B)
NOTE:

CAN system type is easily checked with the vehicle equipment identification information shown in the chart.

Example:
Vehicle is equipped as follows: Sedan, 2WD, MR20DE, CVT, ABS, Active AFS, Intelligent Key system, Navigation system and Automatic drive positioner. (◯ shows an example of CAN system type.)

CAN System Specification Chart

Refer to the specification as shown in the chart.

Body type	Sedan		
Axle	2WD		AWD
Engine	HR15DE	MR20DE	HR15DE
Transmission	A/T	CVT	A/T
Brake control	ABS		
Specification chart	XX.XX "SPECIFICATION CHART A"	YY.YY "SPECIFICATION CHART B"	XX.XX "SPECIFICATION CHART C"

Check the vehicle equipment with the vehicle identification number plate.

Check the vehicle equipment.

Select the applicable vehicle equipment. Refer to the specification chart.

×: Applicable

SPECIFICATION CHART B

Determine CAN system type from the following specification chart.

Body type	Sedan											
Axle	2WD											
Engine	MR20DE											
Transmission	CVT											
Brake control	ABS											
Active AFS		×			×	×			×	×		×
Intelligent Key system			×		×		×	×	×	×	×	×
Navigation system				×		×	×		×		×	×
Automatic drive positioner								×		×	×	×
CAN system type	9	10	11	12	13	14	15	16	17	18	19	20
CAN communication signal chart	XX.XX "TYPE 9/TYPE 10/TYPE 11/TYPE 12/TYPE 13/TYPE 14/TYPE 15/TYPE 16/TYPE 17/TYPE 18/TYPE 19/TYPE 20"											

Check the vehicle equipment.

The number indicates the CAN system type of the vehicle.

×: Applicable

VEHICLE EQUIPMENT IDENTIFICATION INFORMATION

NOTE:

Check CAN system type from the vehicle shape and equipment.

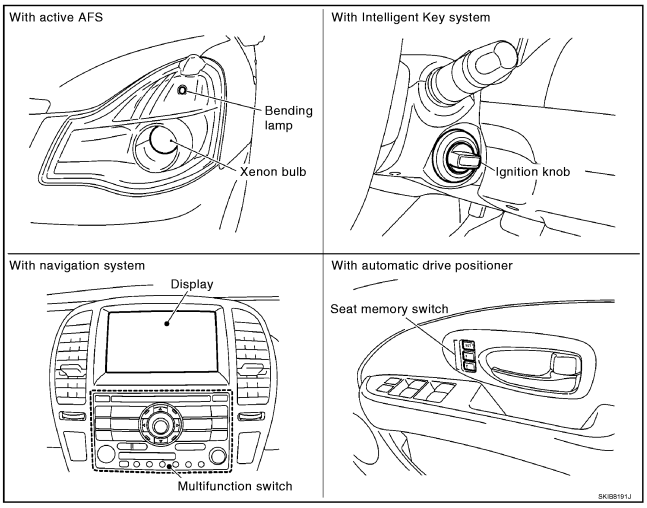

In the above example,
- Checking Xenon bulb and bending lamp lead to judge whether or not Active AFS is equipped.
- Checking the ignition knob leads to judge whether or not Intelligent Key system is equipped.
- Checking display and multifunction switch lead to judge whether or not Navigation system is equipped.
- Checking seat memory switch leads to judge whether or not Automatic drive positioner is equipped.

For the above case, CAN system type is "20".

JSMIA0018GB

CREATE INTERVIEW SHEET

Fill out the symptom described by the customer, vehicle condition, and CAN system type on the interview sheet.

Interview Sheet (Example)

CAN Communication System Diagnosis Interview Sheet

Date received: 3, Feb. 2006

Type: DBA-KG11 VIN No.: KG11-005040

Model: BDRARGZ397EDA-E-J-

First registration: 10, Jan. 2001 Mileage: 62,140

CAN system type: Type 19

Symptom (Results from interview with customer)

- Headlamps suddenly turn ON while driving the vehicle.
- The engine does not restart after stopping the vehicle and turning the ignition switch OFF.
- The cooling fan continues rotating while turning the ignition switch ON.

Condition at inspection

Error Symptom: Present / Past

The engine does not start.
While turning the ignition switch ON,
- The headlamps (Lo) turn ON, and the cooling fan continues rotating.
- The interior lamp does not turn ON.

JSMIA0019GB

DETECT THE ROOT CAUSE

CAN diagnosis function of CONSULT detects the root cause.

HOW TO USE THIS MANUAL

HOW TO USE THIS SECTION

Caution

INFOID:0000000009949483

- This section describes information peculiar to a vehicle and inspection procedures.
- For trouble diagnosis procedure, refer to LAN-13, "Trouble Diagnosis Procedure".

Abbreviation List

INFOID:0000000009949484

Unit name abbreviations in CONSULT CAN diagnosis and in this section are as per the following list.

Abbreviation	Unit name
A-BAG	Air bag diagnosis sensor unit
ABS	ABS actuator and electric unit (control unit)
BCM	BCM
DLC	Data link connector
ECM	ECM
EPS	EPS control unit
IPDM-E	IPDM E/R
M&A	Combination meter
STRG	Steering angle sensor
TCM	TCM

PRECAUTION

PRECAUTIONS

Precaution for Supplemental Restraint System (SRS) "AIR BAG" and "SEAT BELT PRE-TENSIONER"

INFOID:0000000009949485

The Supplemental Restraint System such as “AIR BAG” and “SEAT BELT PRE-TENSIONER”, used along with a front seat belt, helps to reduce the risk or severity of injury to the driver and front passenger for certain types of collision. This system includes seat belt switch inputs and dual stage front air bag modules. The SRS system uses the seat belt switches to determine the front air bag deployment, and may only deploy one front air bag, depending on the severity of a collision and whether the front occupants are belted or unbelted.
Information necessary to service the system safely is included in the “SRS AIR BAG” and “SEAT BELT” of this Service Manual.

WARNING:
Always observe the following items for preventing accidental activation.
- **To avoid rendering the SRS inoperative, which could increase the risk of personal injury or death in the event of a collision that would result in air bag inflation, all maintenance must be performed by an authorized NISSAN/INFINITI dealer.**
- **Improper maintenance, including incorrect removal and installation of the SRS, can lead to personal injury caused by unintentional activation of the system. For removal of Spiral Cable and Air Bag Module, see “SRS AIR BAG”.**
- **Never use electrical test equipment on any circuit related to the SRS unless instructed to in this Service Manual. SRS wiring harnesses can be identified by yellow and/or orange harnesses or harness connectors.**

PRECAUTIONS WHEN USING POWER TOOLS (AIR OR ELECTRIC) AND HAMMERS

WARNING:
Always observe the following items for preventing accidental activation.
- **When working near the Air Bag Diagnosis Sensor Unit or other Air Bag System sensors with the ignition ON or engine running, never use air or electric power tools or strike near the sensor(s) with a hammer. Heavy vibration could activate the sensor(s) and deploy the air bag(s), possibly causing serious injury.**
- **When using air or electric power tools or hammers, always switch the ignition OFF, disconnect the battery, and wait at least 3 minutes before performing any service.**

Precautions for Removing of Battery Terminal

INFOID:0000000010242401

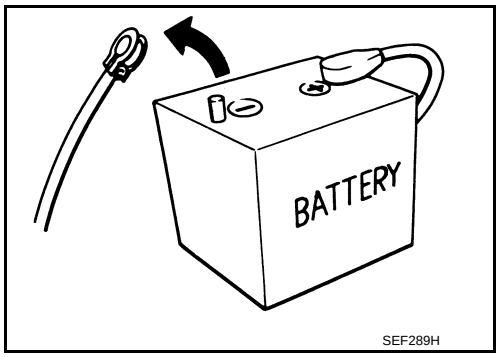

- When removing the 12V battery terminal, turn OFF the ignition switch and wait at least 30 seconds.
  NOTE:
  ECU may be active for several tens of seconds after the ignition switch is turned OFF. If the battery terminal is removed before ECU stops, then a DTC detection error or ECU data corruption may occur.
- For vehicles with the 2-batteries, be sure to connect the main battery and the sub battery before turning ON the ignition switch.
  NOTE:
  If the ignition switch is turned ON with any one of the terminals of main battery and sub battery disconnected, then DTC may be detected.
- After installing the 12V battery, always check "Self Diagnosis Result" of all ECUs and erase DTC.
  NOTE:
  The removal of 12V battery may cause a DTC detection error.

Precautions for Trouble Diagnosis

INFOID:0000000009949486

CAUTION:
- **Never apply 7.0 V or more to the measurement terminal.**
- **Use a tester with open terminal voltage of 7.0 V or less.**

- **Turn the ignition switch OFF and disconnect the battery cable from the negative terminal when checking the harness.**

Precautions for Harness Repair

INFOID:0000000009949487

- Solder the repaired area and wrap tape around the soldered area.
  NOTE:
  A fray of twisted lines must be within 110 mm (4.33 in).

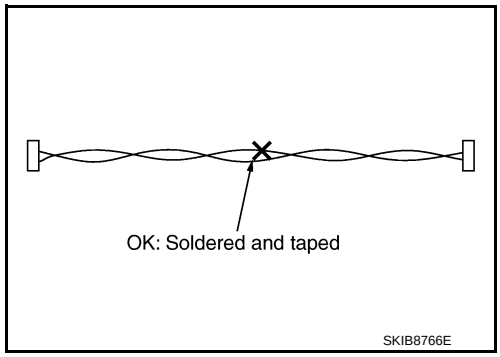

- Bypass connection is never allowed at the repaired area.
  NOTE:
  Bypass connection may cause CAN communication error. The spliced wire becomes separated and the characteristics of twisted line are lost.

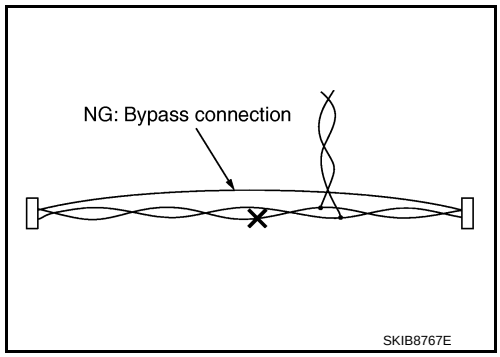

- Replace the applicable harness as an assembly if error is detected on the shield lines of CAN communication line.

BASIC INSPECTION

DIAGNOSIS AND REPAIR WORKFLOW

Interview Sheet

INFOID:0000000009949488

CAN Communication System Diagnosis Interview Sheet

Date received:

Type: VIN No.:

Model:

First registration: Mileage:

CAN system type:

Symptom (Results from interview with customer)

Condition at inspection

Error symptom : Present / Past

SKIB8898E

SYSTEM DESCRIPTION

CAN COMMUNICATION SYSTEM

CAN System Specification Chart

INFOID:0000000009949489

Determine CAN system type from the following specification chart.
NOTE:
Refer to LAN-13, "Trouble Diagnosis Procedure" for how to use CAN system specification chart.

Body type	5-door wagon	
Axle	2WD	
Engine	MR18DE	
Transmission	M/T	CVT
Brake control	VDC	
CAN system type	1	2

CAN Communication Signal Chart

INFOID:0000000009949490

Refer to LAN-12, "How to Use CAN Communication Signal Chart" for how to use CAN communication signal chart.
NOTE:
Refer to LAN-18, "Abbreviation List" for the abbreviations of the connecting units.

T: Transmit R: Receive

Signal name/Connecting unit	ECM	ABS	IPDM-E	TCM	EPS	M&A	STRG	BCM
A/C compressor request signal	T		R					
Accelerator pedal position signal	T	R		R				
ASCD CRUISE indicator signal	T					R		
Closed throttle position signal	T			R				
Cooling fan speed request signal	T		R					
Engine and CVT integrated control signal	T			R				
	R			T				
Engine coolant temperature signal	T					R		
Engine speed signal	T	R		R		R		
Engine status signal	T				R			R
Fuel consumption monitor signal	T					R		
Malfunctioning indicator lamp signal	T					R		
Power generation command value signal	T		R					
ABS warning lamp signal		T				R		
Brake warning lamp signal		T				R		
VDC OFF switch signal		T				R		
VDC warning lamp signal		T				R		
Vehicle speed signal (ABS)	R	T		R	R	R		R
Detention switch signal			T					R
Front wiper stop position signal			T					R
High beam status signal	R		T					
Ignition switch ON signal			T					R
			R					T

Signal name/Connecting unit	ECM	ABS	IPDM-E	TCM	EPS	M&A	STRG	BCM
Ignition switch signal			T					R
Interlock/PNP switch signal			T					R
			R					T
Low beam status signal	R		T					
Oil pressure switch signal			T					R
						R		T
Push-button ignition switch status signal			T					R
Rear window defogger control signal	R		T					
Sleep-ready signal						T		R
			T					R
Starter control relay signal			T					R
			R					T
Starter relay status signal			T					R
			R					T
CVT fluid temperature signal	R			T				
CVT self-diagnosis signal	R			T				
Input shaft revolution signal	R			T				
OD OFF indicator signal				T		R		
Output shaft revolution signal	R			T				
Shift position signal		R		T		R		R
EPS operation signal	R				T			
EPS warning lamp signal					T	R		
Fuel level signal	R					T		
Odometer signal						T		R
Overdrive control switch signal				R		T		
Parking brake switch signal						T		R
Vehicle speed signal (Meter)					R	T		R
Wake up signal						T		R
Steering angle sensor signal		R					T	
A/C on signal	R							T
Blower fan on signal	R							T
Buzzer output signal						R		T
Door switch signal			R			R		T
Engine start operation indicator lamp signal						R		T
Front fog light request signal			R			R		T
Front wiper request signal			R					T
High beam request signal			R			R		T
Key warning lamp signal						R		T
Low beam request signal			R					T
Low tire pressure warning lamp signal						R		T
Position light request signal			R			R		T
Rear window defogger control signal			R					T
Shift P warning lamp signal						R		T

Signal name/Connecting unit	ECM	ABS	IPDM-E	TCM	EPS	M&A	STRG	BCM
Sleep wake up signal			R			R		T
Stop lamp switch signal				R				T
Theft warning horn request signal			R					T
TPMS malfunction warning lamp signal						R		T
Turn indicator signal						R		T

NOTE:

CAN data of the air bag diagnosis sensor unit is not used by usual service work, thus it is omitted.

DTC/CIRCUIT DIAGNOSIS

CAN COMMUNICATION SYSTEM

Component Parts Location

INFOID:0000000009949491

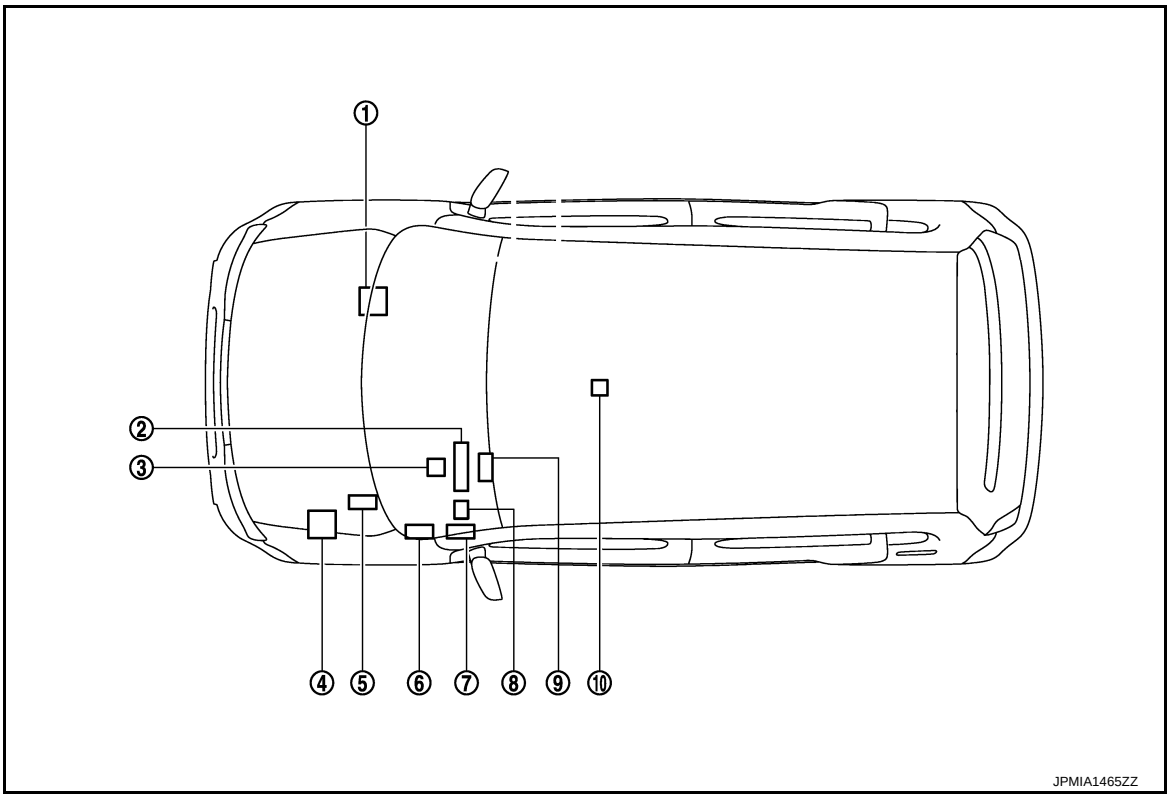

1. ABS actuator and electric unit (control unit) E36
2. Combination meter M34
3. EPS control unit M37
4. IPDM E/R E13
5. ECM E16
6. TCM E18
7. BCM
   M65: Without Intelligent Key
   M68: With Intelligent Key
8. Data link connector M4
9. Steering angle sensor M30
10. Air bag diagnosis sensor unit M59

Wiring Diagram - CAN SYSTEM -

INFOID:0000000009949492

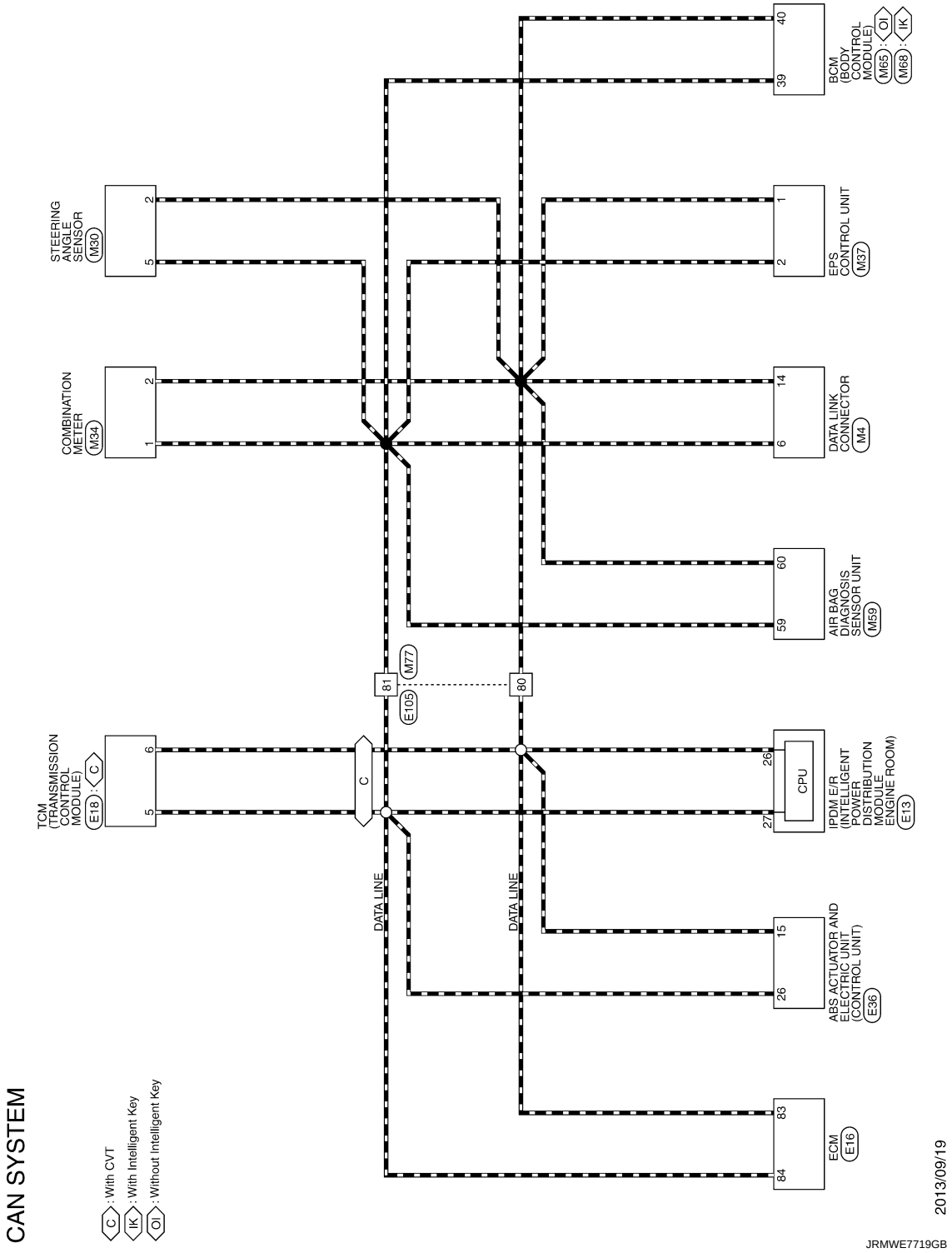

CAN SYSTEM

Connector No.	E13
Connector Name	(PDM E/R (INTELLIGENT POWER DISTRIBUTION MODULE ENGINE ROOM)
Connector Type	TH12FW-NH

H.S.

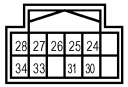

Terminal No.	Color Of Wire	Signal Name [Specification]
24	G	-
25	Y	-
26	P	-
27	L	-
28	P	-
30	SB	-
31	W	-
33	O	-
34	R	-

Connector No.	E16
Connector Name	ECM
Connector Type	RH24FB-RZ8-L-RH

H.S.

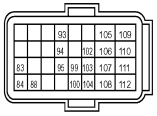

Terminal No.	Color Of Wire	Signal Name [Specification]
83	P	CAN COMMUNICATION LINE
84	L	CAN COMMUNICATION LINE
88	LG	DATA LINK CONNECTOR
93	L	IGNITION SWITCH
94	SB	ASCD STEERING SWITCH
95	BR	SENSOR GROUND
99	W	STOP LAMP SWITCH
100	SB	ASCD BRAKE SWITCH
102	O	SENSOR POWER SUPPLY
103	G	ACCELERATOR PEDAL POSITION SENSOR 2
104	R	SENSOR GROUND
105	G	POWER SUPPLY FOR ECM
106	V	SENSOR POWER SUPPLY
107	B	ECM GROUND
108	B	ECM GROUND
109	B	ECM GROUND
110	BR	ACCELERATOR PEDAL POSITION SENSOR 1
111	Y	SENSOR GROUND
112	B	ECM GROUND

Connector No.	E18
Connector Name	TCM (TRANSMISSION CONTROL MODULE)
Connector Type	TK24FW

H.S.

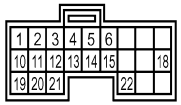

Terminal No.	Color Of Wire	Signal Name [Specification]
1	Y	LINE PRESSURE SOLENOID VLVE
2	LG	SECONDARY PRESSURE SOLENOID VALVE
3	BR	TORQUE CONVERTER CLUTCH SOLENOID VALVE
4	O	LOCK-UP SELECT SOLENOID VALVE
5	L	CAN-H
6	P	CAN-L
10	R	IGNITION POWER SUPPLY
11	W	STEP MOTOR A
12	L	STEP MOTOR B
13	SB	ROM ASSY (SEL 2)
14	P	ROM ASSY (SEL 1)
15	V	ROM ASSY (SEL 3)
18	BR	P RANGE SW
19	R	IGNITION POWER SUPPLY
20	SB	STEP MOTOR C
21	Y	STEP MOTOR D
22	GR	R RANGE SW

Connector No.	E36
Connector Name	ABS ACTUATOR AND ELECTRIC UNIT (CONTROL UNIT)
Connector Type	BAA22FB-AHZ4-RH

H.S.

Terminal No.	Color Of Wire	Signal Name [Specification]
1	B	GND (MTR)
2	Y	BAT (MTR)
3	L	BAT (SOL)
4	B	GND (SOL)
5	Y	DS FL
6	W	DP RL
8	O	DP RR
9	L	DP FR
10	R	DS FR
11	LG	K LINE
14	GR	CAN-L
15	P	CAN-L
16	BR	DP FL
17	G	DS RL
18	V	IGN
19	SB	DS RR
20	W	STOP LAMP SW
21	P	VDC OFF SW
25	R	CAN-H
26	L	CAN-H

Connector No.	E105
Connector Name	WIRE TO WIRE
Connector Type	TH80MW-CS16-TM4

H.S.

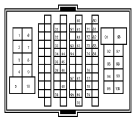

Terminal No.	Color Of Wire	Signal Name [Specification]
1	V	-
2	W	-
3	SB	-
4	G	-
5	P	-
6	L	- [With NAVI]
6	R	- [Without NAVI]
7	Y	-
8	O	-
9	W	-
10	SB	-
31	V	-
32	R	-
33	GR	-
34	P	-
35	Y	-
36	BR	-
39	SB	-
44	R	-
45	V	-
46	P	-
48	L	-
51	B	- [With M/T]
51	BR	- [With CVT]
53	SB	-
54	O	- [With M/T]
54	W	- [With CVT]
57	LG	-
59	L	-
60	O	-
61	G	-
62	W	-
63	L	-
67	GR	- [With CVT]
67	V	- [With M/T]

JRMWE7832GB

CAN SYSTEM

69	P
70	SHIELD
71	GR
72	LG
73	P
74	V
76	Y
77	LG
78	O
79	G
80	P
81	L
82	W
83	BR
84	B
91	W
92	Y
93	Y
94	R
95	V
96	LG
97	R
98	SB
99	G
100	P

Connector No.	M4
Connector Name	DATA LINK CONNECTOR
Connector Type	BD16FW

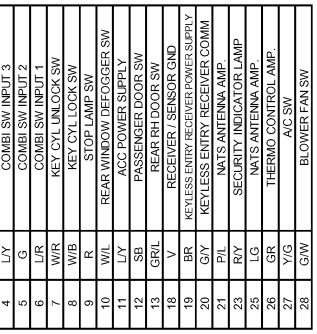

Terminal No.	Color Of Wire	Signal Name [Specification]
4	B	-
5	B	-
6	L	-
7	GR/R	-
8	O	-
14	P	-
16	LG/R	-

Connector No.	M30
Connector Name	STEERING ANGLE SENSOR
Connector Type	TH08FW-NH

Terminal No.	Color Of Wire	Signal Name [Specification]
1	B	GROUND
2	P	CAN-L
4	GR/L	IGN
5	L	CAN-H

Connector No.	M34
Connector Name	COMBINATION METER
Connector Type	TH40FW-NH

Terminal No.	Color Of Wire	Signal Name [Specification]
1	L	CAN-H
2	P	CAN-L
3	V	VEHICLE SPEED SIGNAL (2-PULSE)
4	L	VEHICLE SPEED SIGNAL (8-PULSE) [With NAVI]
4	V/R	VEHICLE SPEED SIGNAL (8-PULSE) [Without NAVI]
6	BR/Y	FUEL LEVEL SENSOR SIGNAL
7	R/G	AIR BAG SIGNAL
8	P	OVERDRIVE CONTROL SWITCH SIGNAL
9	O	SEAT BELT BUCKLE SWITCH SIGNAL (DRIVER SIDE)
10	SB	PARKING BRAKE SWITCH SIGNAL
11	G/R	BRAKE FLUID LEVEL SWITCH SIGNAL
13	B/R	ILLUMINATION CONTROL SIGNAL
15	L/Y	ACC POWER SUPPLY
18	R/Y	SECURITY SIGNAL
19	PU/W	AMBIENT SENSOR SIGNAL
20	R/W	AMBIENT SENSOR GROUND

21	B
22	B
23	B
24	PU
25	B
27	LG/R
28	GR
29	BR
31	R
35	BR
38	GR

Connector No.	M37
Connector Name	EPS CONTROL UNIT
Connector Type	TH08FB

Terminal No.	Color Of Wire	Signal Name [Specification]
1	P	CAN-L
2	L	CAN-H
4	O	IGN

Connector No.	M59
Connector Name	AIR BAG DIAGNOSIS SENSOR UNIT
Connector Type	NH26FY-EX

Terminal No.	Color Of Wire	Signal Name [Specification]
1	R/L	IGN
2	B	GROUND
3	Y	DR 1 (+)
4	Y/R	DR 1 (-) DR 2 (-)

5	L/Y
6	Y/G
7	Y/B
8	Y/L
9	G/Y
18	LG
19	V
22	SHIELD
23	R/G
24	BR
25	R/B
59	L
60	P

Connector No.	M65
Connector Name	BCM (BODY CONTROL MODULE)
Connector Type	TH40FW-NH

Terminal No.	Color Of Wire	Signal Name [Specification]
2	BR/W	COMBI SW INPUT 5
3	GR	COMBI SW INPUT 4
4	L/Y	COMBI SW INPUT 3
5	G	COMBI SW INPUT 2
6	L/R	COMBI SW INPUT 1
7	W/R	KEY CYL UNLOCK SW
8	W/B	KEY CYL LOCK SW
9	R	STOP LAMP SW
10	W/L	REAR WINDOW DEFOGGER SW
11	L/Y	ACC POWER SUPPLY
12	SB	PASSENGER DOOR SW
13	GR/L	REAR RH DOOR SW
18	V	RECEIVER / SENSOR GND
19	BR	KEYLESS ENTRY RECEIVER POWER SUPPLY
20	G/Y	KEYLESS ENTRY RECEIVER COMM
21	P/L	NATS ANTENNA AMP.
23	R/Y	SECURITY INDICATOR LAMP
25	LG	NATS ANTENNA AMP.
26	GR	THERMO CONTROL AMP.
27	Y/G	A/C SW
28	G/W	BLOWER FAN SW

JRMWE7833GB

CAN SYSTEM

29	L/W	HAZARD SW
31	G/Y	FR DEFROSTER SW
32	LG	COMBI SW OUTPUT 5
33	Y/L	COMBI SW OUTPUT 4
34	W	COMBI SW OUTPUT 3
35	R/L	COMBI SW OUTPUT 2
36	L/O	COMBI SW OUTPUT 1
37	R/W	KEY SWITCH
38	O	IGNITION POWER SUPPLY
39	L	CAN-H
40	P	CAN-L

Connector No.	M68
Connector Name	BCM (BODY CONTROL MODULE)
Connector Type	TH40FB-NH

Terminal No.	Color Of Wire	Signal Name [Specification]
2	BR/W	COMBI SW INPUT 5
3	GR	COMBI SW INPUT 4
4	L/Y	COMBI SW INPUT 3
5	G	COMBI SW INPUT 2
6	L/R	COMBI SW INPUT 1
7	W/R	KEY CYL UNLOCK SW
8	W/B	KEY CYL LOCK SW
9	R	STOP LAMP SW 1
12	GR	CENTRAL DOOR LOCK SW
13	BR	CENTRAL DOOR UNLOCK SW
14	L/G	OPTICAL SENSOR
15	W/L	REAR WINDOW DEFOGGER SW
17	R/G	OPTICAL SENSOR POWER SUPPLY
18	V	SENSOR GND
21	P/L	NATS ANTENNA AMP.
23	R/Y	SECURITY INDICATOR LAMP
25	LG	NATS ANTENNA AMP.
27	O	A/C SW
28	G/W	BLOWER FAN SW
29	L/W	HAZARD SW
31	G/B	DR DOOR UNLOCK SENSOR
32	LG	COMBI SW OUTPUT 5
33	Y/L	COMBI SW OUTPUT 4
34	W	COMBI SW OUTPUT 3
35	R/L	COMBI SW OUTPUT 2
36	L/O	COMBI SW OUTPUT 1
37	G/O	SHIFT P
38	G/Y	RECEIVER COMM
39	L	CAN-H
40	P	CAN-L

Connector No.	M77
Connector Name	WIRE TO WIRE
Connector Type	TH80FW-CS16-TM4

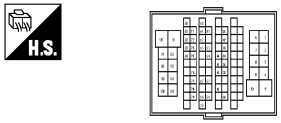

Terminal No.	Color Of Wire	Signal Name [Specification]
1	B/O	-
2	R	-
3	G/R	-
4	G/B	-
5	L	-
6	L	-
7	W/R	-
8	G/W	-
9	Y/L	-
10	W	-
31	GR/L	-
32	L/B	-
33	R/Y	-
34	SB	-
35	BR	-
36	G	-
39	L/R	-
44	G/O	-
45	LG/R	-
46	GR/W	-
48	L/O	-
51	B/W	-
53	R/L	-
54	O	-
57	GR	-
59	V	-
60	R/W	-
61	PU/W	-
62	W/L	-
63	W/B	-
67	Y/R	-
69	LG	-
70	SHIELD	-
71	P/B	-
72	R/G	-
73	R	-
74	L/Y	-
76	W/G	-
77	GR/R	-
78	O	-
79	LG	-
80	P	-
81	L	-
82	GR	-
83	G/R	-
84	B	-
91	R	-
92	O	-
93	Y	-
94	R/B	-
95	L/W	-
96	Y	-
97	L	-
98	BR/W	-
99	W	-
100	G/R	-

JRMWE7834GB

MALFUNCTION AREA CHART

Main Line

INFOID:0000000009949493

Malfunction area	Reference
Main line between IPDM E/R and data link connector	LAN-31, "Diagnosis Procedure"

Branch Line

INFOID:0000000009949494

Malfunction area	Reference
ECM branch line circuit	LAN-32, "Diagnosis Procedure"
ABS actuator and electric unit (control unit) branch line circuit	LAN-33, "Diagnosis Procedure"
IPDM E/R branch line circuit	LAN-34, "Diagnosis Procedure"
TCM branch line circuit	LAN-35, "Diagnosis Procedure"
Air bag diagnosis sensor unit branch line circuit	LAN-36, "Diagnosis Procedure"
Data link connector branch line circuit	LAN-37, "Diagnosis Procedure"
EPS control unit branch line circuit	LAN-38, "Diagnosis Procedure"
Combination meter branch line circuit	LAN-39, "Diagnosis Procedure"
Steering angle sensor branch line circuit	LAN-40, "Diagnosis Procedure"
BCM branch line circuit	LAN-41, "Diagnosis Procedure"

Short Circuit

INFOID:0000000009949495

Malfunction area	Reference
CAN communication circuit	LAN-42, "Diagnosis Procedure"

MAIN LINE BETWEEN IPDM-E AND DLC CIRCUIT

Diagnosis Procedure

INFOID:0000000009949496

1. CHECK CONNECTOR

1. Turn the ignition switch OFF.
2. Disconnect the battery cable from the negative terminal.
3. Check the following terminals and connectors for damage, bend and loose connection (connector side and harness side).

- Harness connector E105
- Harness connector M77

Is the inspection result normal?

YES >> GO TO 2.
NO >> Repair the terminal and connector.

2. CHECK HARNESS CONTINUITY (OPEN CIRCUIT)

1. Disconnect the following harness connectors.

- IPDM E/R
- Harness connectors E105 and M77

2. Check the continuity between the IPDM E/R harness connector and the harness connector.

IPDM E/R harness connector		Harness connector		Continuity
Connector No.	Terminal No.	Connector No.	Terminal No.	
E13	27	E105	81	Existed
	26		80	Existed

Is the inspection result normal?

YES >> GO TO 3.
NO >> Repair the main line between the IPDM E/R and the harness connector E105.

3. CHECK HARNESS CONTINUITY (OPEN CIRCUIT)

Check the continuity between the harness connector and the data link connector.

Harness connector		Data link connector		Continuity
Connector No.	Terminal No.	Connector No.	Terminal No.	
M77	81	M4	6	Existed
	80		14	Existed

Is the inspection result normal?

YES (Present error)>>Check CAN system type decision again.
YES (Past error)>>Error was detected in the main line between the IPDM E/R and the data link connector.
NO >> Repair the main line between the harness connector M77 and the data link connector.

ECM BRANCH LINE CIRCUIT

Diagnosis Procedure

INFOID:0000000009949497

1.CHECK CONNECTOR

1. Turn the ignition switch OFF.
2. Disconnect the battery cable from the negative terminal.
3. Check the terminals and connectors of the ECM for damage, bend and loose connection (unit side and connector side).

Is the inspection result normal?

YES >> GO TO 2.
NO >> Repair the terminal and connector.

2.CHECK HARNESS FOR OPEN CIRCUIT

1. Disconnect the connector of ECM.
2. Check the resistance between the ECM harness connector terminals.

ECM harness connector			Resistance (Ω)
Connector No.	Terminal No.		
E16	84	83	Approx. 108 – 132

Is the measurement value within the specification?

YES >> GO TO 3.
NO >> Repair the ECM branch line.

3.CHECK POWER SUPPLY AND GROUND CIRCUIT

Check the power supply and the ground circuit of the ECM. Refer to EC-129, "Diagnosis Procedure".

Is the inspection result normal?

YES (Present error)>>Replace the ECM. Refer to EC-16, "ADDITIONAL SERVICE WHEN REPLACING CONTROL UNIT : Special Repair Requirement".
YES (Past error)>>Error was detected in the ECM branch line.
NO >> Repair the power supply and the ground circuit.

ABS BRANCH LINE CIRCUIT

Diagnosis Procedure

INFOID:0000000009949498

1. CHECK CONNECTOR

1. Turn the ignition switch OFF.
2. Disconnect the battery cable from the negative terminal.
3. Check the terminals and connectors of the ABS actuator and electric unit (control unit) for damage, bend and loose connection (unit side and connector side).

Is the inspection result normal?

YES >> GO TO 2.
NO >> Repair the terminal and connector.

2. CHECK HARNESS FOR OPEN CIRCUIT

1. Disconnect the connector of ABS actuator and electric unit (control unit).
2. Check the resistance between the ABS actuator and electric unit (control unit) harness connector terminals.

ABS actuator and electric unit (control unit) harness connector			Resistance (Ω)
Connector No.	Terminal No.		
E36	26	15	Approx. 54 – 66

Is the measurement value within the specification?

YES >> GO TO 3.
NO >> Repair the ABS actuator and electric unit (control unit) branch line.

3. CHECK POWER SUPPLY AND GROUND CIRCUIT

Check the power supply and the ground circuit of the ABS actuator and electric unit (control unit). Refer to BRC-77, "Diagnosis Procedure".

Is the inspection result normal?

YES (Present error)>>Replace the ABS actuator and electric unit (control unit). Refer to BRC-113, "Exploded View".
YES (Past error)>>Error was detected in the ABS actuator and electric unit (control unit) branch line.
NO >> Repair the power supply and the ground circuit.

IPDM-E BRANCH LINE CIRCUIT

Diagnosis Procedure

INFOID:0000000009949499

1.CHECK CONNECTOR

1. Turn the ignition switch OFF.
2. Disconnect the battery cable from the negative terminal.
3. Check the terminals and connectors of the IPDM E/R for damage, bend and loose connection (unit side and connector side).

Is the inspection result normal?

YES >> GO TO 2.
NO >> Repair the terminal and connector.

2.CHECK HARNESS FOR OPEN CIRCUIT

1. Disconnect the connector of IPDM E/R.
2. Check the resistance between the IPDM E/R harness connector terminals.

IPDM E/R harness connector			Resistance (Ω)
Connector No.	Terminal No.		
E13	27	26	Approx. 54 – 66

Is the measurement value within the specification?

YES >> GO TO 3.
NO >> Repair the IPDM E/R branch line.

3.CHECK POWER SUPPLY AND GROUND CIRCUIT

Check the power supply and the ground circuit of the IPDM E/R. Refer to the following.
- Models with Intelligent Key: PCS-20, "Diagnosis Procedure"
- Models without Intelligent Key: PCS-49, "Diagnosis Procedure"

Is the inspection result normal?

YES (Present error)>>Replace the IPDM E/R. Refer to the following.
- Models with Intelligent Key: PCS-34, "Exploded View"
- Models without Intelligent Key: PCS-64, "Exploded View"

YES (Past error)>>Error was detected in the IPDM E/R branch line.
NO >> Repair the power supply and the ground circuit.

TCM BRANCH LINE CIRCUIT

Diagnosis Procedure

INFOID:0000000009949500

1. CHECK CONNECTOR

1. Turn the ignition switch OFF.
2. Disconnect the battery cable from the negative terminal.
3. Check the terminals and connectors of the TCM for damage, bend and loose connection (unit side and connector side).

Is the inspection result normal?

YES >> GO TO 2.
NO >> Repair the terminal and connector.

2. CHECK HARNESS FOR OPEN CIRCUIT

1. Disconnect the connector of TCM.
2. Check the resistance between the TCM harness connector terminals.

TCM harness connector			Resistance (Ω)
Connector No.	Terminal No.		
E18	5	6	Approx. 54 – 66

Is the measurement value within the specification?

YES >> GO TO 3.
NO >> Repair the TCM branch line.

3. CHECK POWER SUPPLY AND GROUND CIRCUIT

Check the power supply and the ground circuit of the TCM. Refer to TM-144, "Diagnosis Procedure".

Is the inspection result normal?

YES (Present error)>>Replace the TCM. Refer to TM-223, "Exploded View".
YES (Past error)>>Error was detected in the TCM branch line.
NO >> Repair the power supply and the ground circuit.

A-BAG BRANCH LINE CIRCUIT

Diagnosis Procedure

INFOID:0000000009949501

WARNING:
- **Before servicing, turn ignition switch OFF, disconnect battery negative terminal, and wait 3 minutes or more. (To discharge backup capacitor.)**
- **Never use unspecified tester or other measuring device.**

1. CHECK CONNECTOR

1. Turn the ignition switch OFF.
2. Disconnect the battery cable from the negative terminal.
3. Check the terminals and connectors of the air bag diagnosis sensor unit for damage, bend and loose connection (unit side and connector side).

Is the inspection result normal?

YES >> GO TO 2.
NO >> Replace the main harness.

2. CHECK AIR BAG DIAGNOSIS SENSOR UNIT

Check the air bag diagnosis sensor unit. Refer to SRC-6, "Work Flow".

Is the inspection result normal?

YES >> Replace the main harness.
NO >> Replace parts whose air bag system has a malfunction.

DLC BRANCH LINE CIRCUIT

Diagnosis Procedure

INFOID:0000000009949502

1. CHECK CONNECTOR

1. Turn the ignition switch OFF.
2. Disconnect the battery cable from the negative terminal.
3. Check the terminals and connectors of the data link connector for damage, bend and loose connection (connector side and harness side).

Is the inspection result normal?

YES >> GO TO 2.
NO >> Repair the terminal and connector.

2. CHECK HARNESS FOR OPEN CIRCUIT

Check the resistance between the data link connector terminals.

Data link connector			Resistance (Ω)
Connector No.	Terminal No.		
M4	6	14	Approx. 54 – 66

Is the measurement value within the specification?

YES (Present error)>>Check CAN system type decision again.
YES (Past error)>>Error was detected in the data link connector branch line circuit.
NO >> Repair the data link connector branch line.

EPS BRANCH LINE CIRCUIT

Diagnosis Procedure

INFOID:0000000009949503

1.CHECK CONNECTOR

1. Turn the ignition switch OFF.
2. Disconnect the battery cable from the negative terminal.
3. Check the terminals and connectors of the EPS control unit for damage, bend and loose connection (unit side and connector side).

Is the inspection result normal?

YES >> GO TO 2.
NO >> Repair the terminal and connector.

2.CHECK HARNESS FOR OPEN CIRCUIT

1. Disconnect the connector of EPS control unit.
2. Check the resistance between the EPS control unit harness connector terminals.

EPS control unit harness connector			Resistance (Ω)
Connector No.	Terminal No.		
M37	2	1	Approx. 54 – 66

Is the measurement value within the specification?

YES >> GO TO 3.
NO >> Repair the EPS control unit branch line.

3.CHECK POWER SUPPLY AND GROUND CIRCUIT

Check the power supply and the ground circuit of the EPS control unit. Refer to STC-21, "Diagnosis Procedure".

Is the inspection result normal?

YES (Present error)>>Replace the EPS control unit. Refer to STC-38, "Exploded View".
YES (Past error)>>Error was detected in the EPS control unit branch line.
NO >> Repair the power supply and the ground circuit.

M&A BRANCH LINE CIRCUIT

Diagnosis Procedure

INFOID:0000000009949504

1. CHECK CONNECTOR

1. Turn the ignition switch OFF.
2. Disconnect the battery cable from the negative terminal.
3. Check the terminals and connectors of the combination meter for damage, bend and loose connection (unit side and connector side).

Is the inspection result normal?

YES >> GO TO 2.
NO >> Repair the terminal and connector.

2. CHECK HARNESS FOR OPEN CIRCUIT

1. Disconnect the connector of combination meter.
2. Check the resistance between the combination meter harness connector terminals.

Combination meter harness connector			Resistance (Ω)
Connector No.	Terminal No.		
M34	1	2	Approx. 54 – 66

Is the measurement value within the specification?

YES >> GO TO 3.
NO >> Repair the combination meter branch line.

3. CHECK POWER SUPPLY AND GROUND CIRCUIT

Check the power supply and the ground circuit of the combination meter. Refer to MWI-39, "COMBINATION METER : Diagnosis Procedure".

Is the inspection result normal?

YES (Present error)>>Replace the combination meter. Refer to MWI-93, "Exploded View".
YES (Past error)>>Error was detected in the combination meter branch line.
NO >> Repair the power supply and the ground circuit.

STRG BRANCH LINE CIRCUIT

Diagnosis Procedure

INFOID:0000000009949505

1.CHECK CONNECTOR

1. Turn the ignition switch OFF.
2. Disconnect the battery cable from the negative terminal.
3. Check the terminals and connectors of the steering angle sensor for damage, bend and loose connection (unit side and connector side).

Is the inspection result normal?

YES >> GO TO 2.
NO >> Repair the terminal and connector.

2.CHECK HARNESS FOR OPEN CIRCUIT

1. Disconnect the connector of steering angle sensor.
2. Check the resistance between the steering angle sensor harness connector terminals.

Steering angle sensor harness connector			Resistance (Ω)
Connector No.	Terminal No.		
M30	5	2	Approx. 54 – 66

Is the measurement value within the specification?

YES >> GO TO 3.
NO >> Repair the steering angle sensor branch line.

3.CHECK POWER SUPPLY AND GROUND CIRCUIT

Check the power supply and the ground circuit of the steering angle sensor. Refer to BRC-92, "Wiring Diagram".

Is the inspection result normal?

YES (Present error)>>Replace the steering angle sensor. Refer to BRC-116, "Exploded View".
YES (Past error)>>Error was detected in the steering angle sensor branch line.
NO >> Repair the power supply and the ground circuit.

BCM BRANCH LINE CIRCUIT

Diagnosis Procedure

INFOID:0000000009949506

1.CHECK CONNECTOR

1. Turn the ignition switch OFF.
2. Disconnect the battery cable from the negative terminal.
3. Check the terminals and connectors of the BCM for damage, bend and loose connection (unit side and connector side).

Is the inspection result normal?

YES >> GO TO 2.
NO >> Repair the terminal and connector.

2.CHECK HARNESS FOR OPEN CIRCUIT

1. Disconnect the connector of BCM.
2. Check the resistance between the BCM harness connector terminals.

- Models with Intelligent Key system

BCM harness connector			Resistance (Ω)
Connector No.	Terminal No.		
M68	39	40	Approx. 108 – 132

- Models without Intelligent Key system

BCM harness connector			Resistance (Ω)
Connector No.	Terminal No.		
M65	39	40	Approx. 108 – 132

Is the measurement value within the specification?

YES >> GO TO 3.
NO >> Repair the BCM branch line.

3.CHECK POWER SUPPLY AND GROUND CIRCUIT

Check the power supply and the ground circuit of the BCM. Refer to the following.
- Models with Intelligent Key system: BCS-44, "Diagnosis Procedure"
- Models without Intelligent Key system: BCS-123, "Diagnosis Procedure"

Is the inspection result normal?

YES (Present error)>>Replace the BCM. Refer to the following.
- Models with Intelligent Key system: BCS-88, "Exploded View"
- Models without Intelligent Key system: BCS-155, "Exploded View"

YES (Past error)>>Error was detected in the BCM branch line.
NO >> Repair the power supply and the ground circuit.

CAN COMMUNICATION CIRCUIT

Diagnosis Procedure

INFOID:0000000009949507

1. CONNECTOR INSPECTION

1. Turn the ignition switch OFF.
2. Disconnect the battery cable from the negative terminal.
3. Disconnect all the unit connectors on CAN communication system.
4. Check terminals and connectors for damage, bend and loose connection.

Is the inspection result normal?

YES >> GO TO 2.
NO >> Repair the terminal and connector.

2. CHECK HARNESS CONTINUITY (SHORT CIRCUIT)

Check the continuity between the data link connector terminals.

Data link connector			Continuity
Connector No.	Terminal No.		
M4	6	14	Not existed

Is the inspection result normal?

YES >> GO TO 3.
NO >> Check the harness and repair the root cause.

3. CHECK HARNESS CONTINUITY (SHORT CIRCUIT)

Check the continuity between the data link connector and the ground.

Data link connector		Ground	Continuity
Connector No.	Terminal No.		
M4	6		Not existed
	14		Not existed

Is the inspection result normal?

YES >> GO TO 4.
NO >> Check the harness and repair the root cause.

4. CHECK ECM AND BCM TERMINATION CIRCUIT

1. Remove the ECM and the BCM.
2. Check the resistance between the ECM terminals.

1 : ECM or BCM

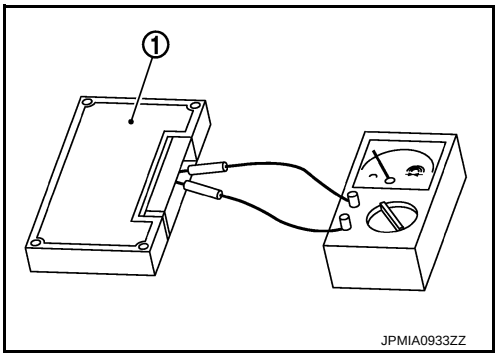

ECM		Resistance (Ω)
Terminal No.		
84	83	Approx. 108 – 132

3. Check the resistance between the BCM terminals.

BCM		Resistance (Ω)
Terminal No.		
39	40	Approx. 108 – 132

Is the measurement value within the specification?

YES >> GO TO 5.
NO >> Replace the ECM and/or the BCM.

5. CHECK SYMPTOM

Connect all the connectors. Check if the symptoms described in the “Symptom (Results from interview with customer)” are reproduced.

Inspection result

Reproduced>>GO TO 6.
Non-reproduced>>Start the diagnosis again. Follow the trouble diagnosis procedure when past error is detected.

6.CHECK UNIT REPRODUCTION

Perform the reproduction test as per the following procedure for each unit.

1. Turn the ignition switch OFF.
2. Disconnect the battery cable from the negative terminal.
3. Disconnect one of the unit connectors of CAN communication system.
   NOTE:
   ECM and BCM have a termination circuit. Check other units first.
4. Connect the battery cable to the negative terminal. Check if the symptoms described in the “Symptom (Results from interview with customer)” are reproduced.
   NOTE:
   Although unit-related error symptoms occur, do not confuse them with other symptoms.

Inspection result

Reproduced>>Connect the connector. Check other units as per the above procedure.
Non-reproduced>>Replace the unit whose connector was disconnected.

DTC/CIRCUIT DIAGNOSIS

MAIN LINE BETWEEN IPDM-E AND DLC CIRCUIT

Diagnosis Procedure

INFOID:0000000010243515

1.CHECK CONNECTOR

1. Turn the ignition switch OFF.
2. Disconnect the battery cable from the negative terminal.
3. Check the following terminals and connectors for damage, bend and loose connection (connector side and harness side).

- Harness connector E105
- Harness connector M77

Is the inspection result normal?

YES >> GO TO 2.
NO >> Repair the terminal and connector.

2.CHECK HARNESS CONTINUITY (OPEN CIRCUIT)

1. Disconnect the following harness connectors.

- IPDM E/R
- Harness connectors E105 and M77

2. Check the continuity between the IPDM E/R harness connector and the harness connector.

IPDM E/R harness connector		Harness connector		Continuity
Connector No.	Terminal No.	Connector No.	Terminal No.	
E13	27	E105	81	Existed
	26		80	Existed

Is the inspection result normal?

YES >> GO TO 3.
NO >> Repair the main line between the IPDM E/R and the harness connector E105.

3.CHECK HARNESS CONTINUITY (OPEN CIRCUIT)

Check the continuity between the harness connector and the data link connector.

Harness connector		Data link connector		Continuity
Connector No.	Terminal No.	Connector No.	Terminal No.	
M77	81	M4	6	Existed
	80		14	Existed

Is the inspection result normal?

YES (Present error)>>Check CAN system type decision again.
YES (Past error)>>Error was detected in the main line between the IPDM E/R and the data link connector.
NO >> Repair the main line between the harness connector M77 and the data link connector.

ECM BRANCH LINE CIRCUIT

Diagnosis Procedure

INFOID:0000000010243516

1.CHECK CONNECTOR

1. Turn the ignition switch OFF.
2. Disconnect the battery cable from the negative terminal.
3. Check the terminals and connectors of the ECM for damage, bend and loose connection (unit side and connector side).

Is the inspection result normal?

YES >> GO TO 2.
NO >> Repair the terminal and connector.

2.CHECK HARNESS FOR OPEN CIRCUIT

1. Disconnect the connector of ECM.
2. Check the resistance between the ECM harness connector terminals.

ECM harness connector			Resistance (Ω)
Connector No.	Terminal No.		
E16	84	83	Approx. 108 – 132

Is the measurement value within the specification?

YES >> GO TO 3.
NO >> Repair the ECM branch line.

3.CHECK POWER SUPPLY AND GROUND CIRCUIT

Check the power supply and the ground circuit of the ECM. Refer to EC-129, "Diagnosis Procedure".

Is the inspection result normal?

YES (Present error)>>Replace the ECM. Refer to EC-16, "ADDITIONAL SERVICE WHEN REPLACING CONTROL UNIT : Special Repair Requirement".
YES (Past error)>>Error was detected in the ECM branch line.
NO >> Repair the power supply and the ground circuit.

ABS BRANCH LINE CIRCUIT

Diagnosis Procedure

INFOID:0000000010243517

1.CHECK CONNECTOR

1. Turn the ignition switch OFF.
2. Disconnect the battery cable from the negative terminal.
3. Check the terminals and connectors of the ABS actuator and electric unit (control unit) for damage, bend and loose connection (unit side and connector side).

Is the inspection result normal?

YES >> GO TO 2.
NO >> Repair the terminal and connector.

2.CHECK HARNESS FOR OPEN CIRCUIT

1. Disconnect the connector of ABS actuator and electric unit (control unit).
2. Check the resistance between the ABS actuator and electric unit (control unit) harness connector terminals.

ABS actuator and electric unit (control unit) harness connector			Resistance (Ω)
Connector No.	Terminal No.		
E36	26	15	Approx. 54 – 66

Is the measurement value within the specification?

YES >> GO TO 3.
NO >> Repair the ABS actuator and electric unit (control unit) branch line.

3.CHECK POWER SUPPLY AND GROUND CIRCUIT

Check the power supply and the ground circuit of the ABS actuator and electric unit (control unit). Refer to BRC-77, "Diagnosis Procedure".

Is the inspection result normal?

YES (Present error)>>Replace the ABS actuator and electric unit (control unit). Refer to BRC-113, "Exploded View".
YES (Past error)>>Error was detected in the ABS actuator and electric unit (control unit) branch line.
NO >> Repair the power supply and the ground circuit.

IPDM-E BRANCH LINE CIRCUIT

Diagnosis Procedure

INFOID:0000000010243518

1.CHECK CONNECTOR

1. Turn the ignition switch OFF.
2. Disconnect the battery cable from the negative terminal.
3. Check the terminals and connectors of the IPDM E/R for damage, bend and loose connection (unit side and connector side).

Is the inspection result normal?

YES >> GO TO 2.
NO >> Repair the terminal and connector.

2.CHECK HARNESS FOR OPEN CIRCUIT

1. Disconnect the connector of IPDM E/R.
2. Check the resistance between the IPDM E/R harness connector terminals.

IPDM E/R harness connector			Resistance (Ω)
Connector No.	Terminal No.		
E13	27	26	Approx. 54 – 66

Is the measurement value within the specification?

YES >> GO TO 3.
NO >> Repair the IPDM E/R branch line.

3.CHECK POWER SUPPLY AND GROUND CIRCUIT

Check the power supply and the ground circuit of the IPDM E/R. Refer to the following.
- Models with Intelligent Key: PCS-20, "Diagnosis Procedure"
- Models without Intelligent Key: PCS-49, "Diagnosis Procedure"

Is the inspection result normal?

YES (Present error)>>Replace the IPDM E/R. Refer to the following.
- Models with Intelligent Key: PCS-34, "Exploded View"
- Models without Intelligent Key: PCS-64, "Exploded View"

YES (Past error)>>Error was detected in the IPDM E/R branch line.
NO >> Repair the power supply and the ground circuit.

A-BAG BRANCH LINE CIRCUIT

Diagnosis Procedure

INFOID:0000000010243519

WARNING:
- **Before servicing, turn ignition switch OFF, disconnect battery negative terminal, and wait 3 minutes or more. (To discharge backup capacitor.)**
- **Never use unspecified tester or other measuring device.**

1. CHECK CONNECTOR

1. Turn the ignition switch OFF.
2. Disconnect the battery cable from the negative terminal.
3. Check the terminals and connectors of the air bag diagnosis sensor unit for damage, bend and loose connection (unit side and connector side).

Is the inspection result normal?

YES >> GO TO 2.
NO >> Replace the main harness.

2. CHECK AIR BAG DIAGNOSIS SENSOR UNIT

Check the air bag diagnosis sensor unit. Refer to SRC-6, "Work Flow".

Is the inspection result normal?

YES >> Replace the main harness.
NO >> Replace parts whose air bag system has a malfunction.

DLC BRANCH LINE CIRCUIT

Diagnosis Procedure

INFOID:0000000010243520

1. CHECK CONNECTOR

1. Turn the ignition switch OFF.
2. Disconnect the battery cable from the negative terminal.
3. Check the terminals and connectors of the data link connector for damage, bend and loose connection (connector side and harness side).

Is the inspection result normal?

YES >> GO TO 2.
NO >> Repair the terminal and connector.

2. CHECK HARNESS FOR OPEN CIRCUIT

Check the resistance between the data link connector terminals.

Data link connector			Resistance (Ω)
Connector No.	Terminal No.		
M4	6	14	Approx. 54 – 66

Is the measurement value within the specification?

YES (Present error)>>Check CAN system type decision again.
YES (Past error)>>Error was detected in the data link connector branch line circuit.
NO >> Repair the data link connector branch line.

EPS BRANCH LINE CIRCUIT

Diagnosis Procedure

INFOID:0000000010243521

1.CHECK CONNECTOR

1. Turn the ignition switch OFF.
2. Disconnect the battery cable from the negative terminal.
3. Check the terminals and connectors of the EPS control unit for damage, bend and loose connection (unit side and connector side).

Is the inspection result normal?

YES >> GO TO 2.
NO >> Repair the terminal and connector.

2.CHECK HARNESS FOR OPEN CIRCUIT

1. Disconnect the connector of EPS control unit.
2. Check the resistance between the EPS control unit harness connector terminals.

EPS control unit harness connector			Resistance (Ω)
Connector No.	Terminal No.		
M37	2	1	Approx. 54 – 66

Is the measurement value within the specification?

YES >> GO TO 3.
NO >> Repair the EPS control unit branch line.

3.CHECK POWER SUPPLY AND GROUND CIRCUIT

Check the power supply and the ground circuit of the EPS control unit. Refer to STC-21, "Diagnosis Procedure".

Is the inspection result normal?

YES (Present error)>>Replace the EPS control unit. Refer to STC-38, "Exploded View".
YES (Past error)>>Error was detected in the EPS control unit branch line.
NO >> Repair the power supply and the ground circuit.

M&A BRANCH LINE CIRCUIT

Diagnosis Procedure

INFOID:0000000010243522

1. CHECK CONNECTOR

1. Turn the ignition switch OFF.
2. Disconnect the battery cable from the negative terminal.
3. Check the terminals and connectors of the combination meter for damage, bend and loose connection (unit side and connector side).

Is the inspection result normal?

YES >> GO TO 2.
NO >> Repair the terminal and connector.

2. CHECK HARNESS FOR OPEN CIRCUIT

1. Disconnect the connector of combination meter.
2. Check the resistance between the combination meter harness connector terminals.

Combination meter harness connector			Resistance (Ω)
Connector No.	Terminal No.		
M34	1	2	Approx. 54 – 66

Is the measurement value within the specification?

YES >> GO TO 3.
NO >> Repair the combination meter branch line.

3. CHECK POWER SUPPLY AND GROUND CIRCUIT

Check the power supply and the ground circuit of the combination meter. Refer to MWI-39, "COMBINATION METER : Diagnosis Procedure".

Is the inspection result normal?

YES (Present error)>>Replace the combination meter. Refer to MWI-93, "Exploded View".
YES (Past error)>>Error was detected in the combination meter branch line.
NO >> Repair the power supply and the ground circuit.

STRG BRANCH LINE CIRCUIT

Diagnosis Procedure

INFOID:0000000010243523

1.CHECK CONNECTOR

1. Turn the ignition switch OFF.
2. Disconnect the battery cable from the negative terminal.
3. Check the terminals and connectors of the steering angle sensor for damage, bend and loose connection (unit side and connector side).

Is the inspection result normal?

YES >> GO TO 2.
NO >> Repair the terminal and connector.

2.CHECK HARNESS FOR OPEN CIRCUIT

1. Disconnect the connector of steering angle sensor.
2. Check the resistance between the steering angle sensor harness connector terminals.

Steering angle sensor harness connector			Resistance (Ω)
Connector No.	Terminal No.		
M30	5	2	Approx. 54 – 66

Is the measurement value within the specification?

YES >> GO TO 3.
NO >> Repair the steering angle sensor branch line.

3.CHECK POWER SUPPLY AND GROUND CIRCUIT

Check the power supply and the ground circuit of the steering angle sensor. Refer to BRC-92, "Wiring Diagram".

Is the inspection result normal?

YES (Present error)>>Replace the steering angle sensor. Refer to BRC-116, "Exploded View".
YES (Past error)>>Error was detected in the steering angle sensor branch line.
NO >> Repair the power supply and the ground circuit.

BCM BRANCH LINE CIRCUIT

Diagnosis Procedure

INFOID:0000000010243524

1.CHECK CONNECTOR

1. Turn the ignition switch OFF.
2. Disconnect the battery cable from the negative terminal.
3. Check the terminals and connectors of the BCM for damage, bend and loose connection (unit side and connector side).

Is the inspection result normal?

YES >> GO TO 2.
NO >> Repair the terminal and connector.

2.CHECK HARNESS FOR OPEN CIRCUIT

1. Disconnect the connector of BCM.
2. Check the resistance between the BCM harness connector terminals.

- Models with Intelligent Key system

BCM harness connector			Resistance (Ω)
Connector No.	Terminal No.		
M68	39	40	Approx. 108 – 132

- Models without Intelligent Key system

BCM harness connector			Resistance (Ω)
Connector No.	Terminal No.		
M65	39	40	Approx. 108 – 132

Is the measurement value within the specification?

YES >> GO TO 3.
NO >> Repair the BCM branch line.

3.CHECK POWER SUPPLY AND GROUND CIRCUIT

Check the power supply and the ground circuit of the BCM. Refer to the following.
- Models with Intelligent Key system: BCS-44, "Diagnosis Procedure"
- Models without Intelligent Key system: BCS-123, "Diagnosis Procedure"

Is the inspection result normal?

YES (Present error)>>Replace the BCM. Refer to the following.
- Models with Intelligent Key system: BCS-88, "Exploded View"
- Models without Intelligent Key system: BCS-155, "Exploded View"

YES (Past error)>>Error was detected in the BCM branch line.
NO >> Repair the power supply and the ground circuit.

CAN COMMUNICATION CIRCUIT

Diagnosis Procedure

INFOID:0000000010243525

1.CONNECTOR INSPECTION

1. Turn the ignition switch OFF.
2. Disconnect the battery cable from the negative terminal.
3. Disconnect all the unit connectors on CAN communication system.
4. Check terminals and connectors for damage, bend and loose connection.

Is the inspection result normal?

YES >> GO TO 2.
NO >> Repair the terminal and connector.

2.CHECK HARNESS CONTINUITY (SHORT CIRCUIT)

Check the continuity between the data link connector terminals.

Data link connector			Continuity
Connector No.	Terminal No.		
M4	6	14	Not existed

Is the inspection result normal?

YES >> GO TO 3.
NO >> Check the harness and repair the root cause.

3.CHECK HARNESS CONTINUITY (SHORT CIRCUIT)

Check the continuity between the data link connector and the ground.

Data link connector		Ground	Continuity
Connector No.	Terminal No.		
M4	6		Not existed
	14		Not existed

Is the inspection result normal?

YES >> GO TO 4.
NO >> Check the harness and repair the root cause.

4.CHECK ECM AND BCM TERMINATION CIRCUIT

1. Remove the ECM and the BCM.
2. Check the resistance between the ECM terminals.

1 : ECM or BCM

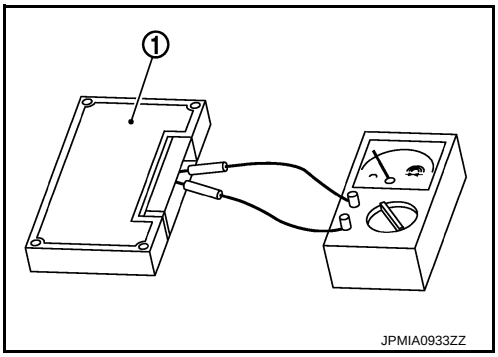

ECM		Resistance (Ω)
Terminal No.		
84	83	Approx. 108 – 132

3. Check the resistance between the BCM terminals.

BCM		Resistance (Ω)
Terminal No.		
39	40	Approx. 108 – 132

Is the measurement value within the specification?

YES >> GO TO 5.
NO >> Replace the ECM and/or the BCM.

5.CHECK SYMPTOM

Connect all the connectors. Check if the symptoms described in the “Symptom (Results from interview with customer)” are reproduced.

Inspection result

Reproduced>>GO TO 6.
Non-reproduced>>Start the diagnosis again. Follow the trouble diagnosis procedure when past error is detected.

6. CHECK UNIT REPRODUCTION

Perform the reproduction test as per the following procedure for each unit.

1. Turn the ignition switch OFF.
2. Disconnect the battery cable from the negative terminal.
3. Disconnect one of the unit connectors of CAN communication system.
   NOTE:
   ECM and BCM have a termination circuit. Check other units first.
4. Connect the battery cable to the negative terminal. Check if the symptoms described in the “Symptom (Results from interview with customer)” are reproduced.
   NOTE:
   Although unit-related error symptoms occur, do not confuse them with other symptoms.

Inspection result

Reproduced>>Connect the connector. Check other units as per the above procedure.
Non-reproduced>>Replace the unit whose connector was disconnected.

DTC/CIRCUIT DIAGNOSIS

MAIN LINE BETWEEN IPDM-E AND DLC CIRCUIT

Diagnosis Procedure

INFOID:0000000010243526

1.CHECK CONNECTOR

1. Turn the ignition switch OFF.
2. Disconnect the battery cable from the negative terminal.
3. Check the following terminals and connectors for damage, bend and loose connection (connector side and harness side).

- Harness connector E105
- Harness connector M77

Is the inspection result normal?

YES >> GO TO 2.
NO >> Repair the terminal and connector.

2.CHECK HARNESS CONTINUITY (OPEN CIRCUIT)

1. Disconnect the following harness connectors.

- IPDM E/R
- Harness connectors E105 and M77

2. Check the continuity between the IPDM E/R harness connector and the harness connector.

IPDM E/R harness connector		Harness connector		Continuity
Connector No.	Terminal No.	Connector No.	Terminal No.	
E13	27	E105	81	Existed
	26		80	Existed

Is the inspection result normal?

YES >> GO TO 3.
NO >> Repair the main line between the IPDM E/R and the harness connector E105.

3.CHECK HARNESS CONTINUITY (OPEN CIRCUIT)

Check the continuity between the harness connector and the data link connector.

Harness connector		Data link connector		Continuity
Connector No.	Terminal No.	Connector No.	Terminal No.	
M77	81	M4	6	Existed
	80		14	Existed

Is the inspection result normal?

YES (Present error)>>Check CAN system type decision again.
YES (Past error)>>Error was detected in the main line between the IPDM E/R and the data link connector.
NO >> Repair the main line between the harness connector M77 and the data link connector.

ECM BRANCH LINE CIRCUIT

Diagnosis Procedure

INFOID:0000000010243527

1.CHECK CONNECTOR

1. Turn the ignition switch OFF.
2. Disconnect the battery cable from the negative terminal.
3. Check the terminals and connectors of the ECM for damage, bend and loose connection (unit side and connector side).

Is the inspection result normal?

YES >> GO TO 2.
NO >> Repair the terminal and connector.

2.CHECK HARNESS FOR OPEN CIRCUIT

1. Disconnect the connector of ECM.
2. Check the resistance between the ECM harness connector terminals.

ECM harness connector			Resistance (Ω)
Connector No.	Terminal No.		
E16	84	83	Approx. 108 – 132

Is the measurement value within the specification?

YES >> GO TO 3.
NO >> Repair the ECM branch line.

3.CHECK POWER SUPPLY AND GROUND CIRCUIT

Check the power supply and the ground circuit of the ECM. Refer to EC-129, "Diagnosis Procedure".

Is the inspection result normal?

YES (Present error)>>Replace the ECM. Refer to EC-16, "ADDITIONAL SERVICE WHEN REPLACING CONTROL UNIT : Special Repair Requirement".
YES (Past error)>>Error was detected in the ECM branch line.
NO >> Repair the power supply and the ground circuit.

ABS BRANCH LINE CIRCUIT

Diagnosis Procedure

INFOID:0000000010243528

1.CHECK CONNECTOR

1. Turn the ignition switch OFF.
2. Disconnect the battery cable from the negative terminal.
3. Check the terminals and connectors of the ABS actuator and electric unit (control unit) for damage, bend and loose connection (unit side and connector side).

Is the inspection result normal?

YES >> GO TO 2.
NO >> Repair the terminal and connector.

2.CHECK HARNESS FOR OPEN CIRCUIT

1. Disconnect the connector of ABS actuator and electric unit (control unit).
2. Check the resistance between the ABS actuator and electric unit (control unit) harness connector terminals.

ABS actuator and electric unit (control unit) harness connector			Resistance (Ω)
Connector No.	Terminal No.		
E36	26	15	Approx. 54 – 66

Is the measurement value within the specification?

YES >> GO TO 3.
NO >> Repair the ABS actuator and electric unit (control unit) branch line.

3.CHECK POWER SUPPLY AND GROUND CIRCUIT

Check the power supply and the ground circuit of the ABS actuator and electric unit (control unit). Refer to BRC-77, "Diagnosis Procedure".

Is the inspection result normal?

YES (Present error)>>Replace the ABS actuator and electric unit (control unit). Refer to BRC-113, "Exploded View".
YES (Past error)>>Error was detected in the ABS actuator and electric unit (control unit) branch line.
NO >> Repair the power supply and the ground circuit.

IPDM-E BRANCH LINE CIRCUIT

Diagnosis Procedure

INFOID:0000000010243529

1.CHECK CONNECTOR

1. Turn the ignition switch OFF.
2. Disconnect the battery cable from the negative terminal.
3. Check the terminals and connectors of the IPDM E/R for damage, bend and loose connection (unit side and connector side).

Is the inspection result normal?

YES >> GO TO 2.
NO >> Repair the terminal and connector.

2.CHECK HARNESS FOR OPEN CIRCUIT

1. Disconnect the connector of IPDM E/R.
2. Check the resistance between the IPDM E/R harness connector terminals.

IPDM E/R harness connector			Resistance (Ω)
Connector No.	Terminal No.		
E13	27	26	Approx. 54 – 66

Is the measurement value within the specification?

YES >> GO TO 3.
NO >> Repair the IPDM E/R branch line.

3.CHECK POWER SUPPLY AND GROUND CIRCUIT

Check the power supply and the ground circuit of the IPDM E/R. Refer to the following.
- Models with Intelligent Key: PCS-20, "Diagnosis Procedure"
- Models without Intelligent Key: PCS-49, "Diagnosis Procedure"

Is the inspection result normal?

YES (Present error)>>Replace the IPDM E/R. Refer to the following.
- Models with Intelligent Key: PCS-34, "Exploded View"
- Models without Intelligent Key: PCS-64, "Exploded View"

YES (Past error)>>Error was detected in the IPDM E/R branch line.
NO >> Repair the power supply and the ground circuit.

TCM BRANCH LINE CIRCUIT

Diagnosis Procedure

INFOID:0000000010243530

1.CHECK CONNECTOR

1. Turn the ignition switch OFF.
2. Disconnect the battery cable from the negative terminal.
3. Check the terminals and connectors of the TCM for damage, bend and loose connection (unit side and connector side).

Is the inspection result normal?

YES >> GO TO 2.
NO >> Repair the terminal and connector.

2.CHECK HARNESS FOR OPEN CIRCUIT

1. Disconnect the connector of TCM.
2. Check the resistance between the TCM harness connector terminals.

TCM harness connector			Resistance (Ω)
Connector No.	Terminal No.		
E18	5	6	Approx. 54 – 66

Is the measurement value within the specification?

YES >> GO TO 3.
NO >> Repair the TCM branch line.

3.CHECK POWER SUPPLY AND GROUND CIRCUIT

Check the power supply and the ground circuit of the TCM. Refer to TM-144, "Diagnosis Procedure".

Is the inspection result normal?

YES (Present error)>>Replace the TCM. Refer to TM-223, "Exploded View".
YES (Past error)>>Error was detected in the TCM branch line.
NO >> Repair the power supply and the ground circuit.

A-BAG BRANCH LINE CIRCUIT

Diagnosis Procedure

INFOID:0000000010243531

WARNING:
- **Before servicing, turn ignition switch OFF, disconnect battery negative terminal, and wait 3 minutes or more. (To discharge backup capacitor.)**
- **Never use unspecified tester or other measuring device.**

1. CHECK CONNECTOR

1. Turn the ignition switch OFF.
2. Disconnect the battery cable from the negative terminal.
3. Check the terminals and connectors of the air bag diagnosis sensor unit for damage, bend and loose connection (unit side and connector side).

Is the inspection result normal?

YES >> GO TO 2.
NO >> Replace the main harness.

2. CHECK AIR BAG DIAGNOSIS SENSOR UNIT

Check the air bag diagnosis sensor unit. Refer to SRC-6, "Work Flow".

Is the inspection result normal?

YES >> Replace the main harness.
NO >> Replace parts whose air bag system has a malfunction.

DLC BRANCH LINE CIRCUIT

Diagnosis Procedure

INFOID:0000000010243532

1.CHECK CONNECTOR

1. Turn the ignition switch OFF.
2. Disconnect the battery cable from the negative terminal.
3. Check the terminals and connectors of the data link connector for damage, bend and loose connection (connector side and harness side).

Is the inspection result normal?

YES >> GO TO 2.
NO >> Repair the terminal and connector.

2.CHECK HARNESS FOR OPEN CIRCUIT

Check the resistance between the data link connector terminals.

Data link connector			Resistance (Ω)
Connector No.	Terminal No.		
M4	6	14	Approx. 54 – 66

Is the measurement value within the specification?

YES (Present error)>>Check CAN system type decision again.
YES (Past error)>>Error was detected in the data link connector branch line circuit.
NO >> Repair the data link connector branch line.

EPS BRANCH LINE CIRCUIT

Diagnosis Procedure

INFOID:0000000010243533

1. CHECK CONNECTOR

1. Turn the ignition switch OFF.
2. Disconnect the battery cable from the negative terminal.
3. Check the terminals and connectors of the EPS control unit for damage, bend and loose connection (unit side and connector side).

Is the inspection result normal?

YES >> GO TO 2.
NO >> Repair the terminal and connector.

2. CHECK HARNESS FOR OPEN CIRCUIT

1. Disconnect the connector of EPS control unit.
2. Check the resistance between the EPS control unit harness connector terminals.

EPS control unit harness connector			Resistance (Ω)
Connector No.	Terminal No.		
M37	2	1	Approx. 54 – 66

Is the measurement value within the specification?

YES >> GO TO 3.
NO >> Repair the EPS control unit branch line.

3. CHECK POWER SUPPLY AND GROUND CIRCUIT

Check the power supply and the ground circuit of the EPS control unit. Refer to STC-21, "Diagnosis Procedure".

Is the inspection result normal?

YES (Present error)>>Replace the EPS control unit. Refer to STC-38, "Exploded View".
YES (Past error)>>Error was detected in the EPS control unit branch line.
NO >> Repair the power supply and the ground circuit.

M&A BRANCH LINE CIRCUIT

Diagnosis Procedure

INFOID:0000000010243534

1.CHECK CONNECTOR

1. Turn the ignition switch OFF.
2. Disconnect the battery cable from the negative terminal.
3. Check the terminals and connectors of the combination meter for damage, bend and loose connection (unit side and connector side).

Is the inspection result normal?

YES >> GO TO 2.
NO >> Repair the terminal and connector.

2.CHECK HARNESS FOR OPEN CIRCUIT

1. Disconnect the connector of combination meter.
2. Check the resistance between the combination meter harness connector terminals.

Combination meter harness connector			Resistance (Ω)
Connector No.	Terminal No.		
M34	1	2	Approx. 54 – 66

Is the measurement value within the specification?

YES >> GO TO 3.
NO >> Repair the combination meter branch line.

3.CHECK POWER SUPPLY AND GROUND CIRCUIT

Check the power supply and the ground circuit of the combination meter. Refer to MWI-39, "COMBINATION METER : Diagnosis Procedure".

Is the inspection result normal?

YES (Present error)>>Replace the combination meter. Refer to MWI-93, "Exploded View".
YES (Past error)>>Error was detected in the combination meter branch line.
NO >> Repair the power supply and the ground circuit.

STRG BRANCH LINE CIRCUIT

Diagnosis Procedure

INFOID:0000000010243535

1.CHECK CONNECTOR

1. Turn the ignition switch OFF.
2. Disconnect the battery cable from the negative terminal.
3. Check the terminals and connectors of the steering angle sensor for damage, bend and loose connection (unit side and connector side).

Is the inspection result normal?

YES >> GO TO 2.
NO >> Repair the terminal and connector.

2.CHECK HARNESS FOR OPEN CIRCUIT

1. Disconnect the connector of steering angle sensor.
2. Check the resistance between the steering angle sensor harness connector terminals.

Steering angle sensor harness connector			Resistance (Ω)
Connector No.	Terminal No.		
M30	5	2	Approx. 54 – 66

Is the measurement value within the specification?

YES >> GO TO 3.
NO >> Repair the steering angle sensor branch line.

3.CHECK POWER SUPPLY AND GROUND CIRCUIT

Check the power supply and the ground circuit of the steering angle sensor. Refer to BRC-92, "Wiring Diagram".

Is the inspection result normal?

YES (Present error)>>Replace the steering angle sensor. Refer to BRC-116, "Exploded View".
YES (Past error)>>Error was detected in the steering angle sensor branch line.
NO >> Repair the power supply and the ground circuit.

BCM BRANCH LINE CIRCUIT

Diagnosis Procedure

INFOID:0000000010243536

1.CHECK CONNECTOR

1. Turn the ignition switch OFF.
2. Disconnect the battery cable from the negative terminal.
3. Check the terminals and connectors of the BCM for damage, bend and loose connection (unit side and connector side).

Is the inspection result normal?

YES >> GO TO 2.
NO >> Repair the terminal and connector.

2.CHECK HARNESS FOR OPEN CIRCUIT

1. Disconnect the connector of BCM.
2. Check the resistance between the BCM harness connector terminals.

- Models with Intelligent Key system

BCM harness connector			Resistance (Ω)
Connector No.	Terminal No.		
M68	39	40	Approx. 108 – 132

- Models without Intelligent Key system

BCM harness connector			Resistance (Ω)
Connector No.	Terminal No.		
M65	39	40	Approx. 108 – 132

Is the measurement value within the specification?

YES >> GO TO 3.
NO >> Repair the BCM branch line.

3.CHECK POWER SUPPLY AND GROUND CIRCUIT

Check the power supply and the ground circuit of the BCM. Refer to the following.
- Models with Intelligent Key system: BCS-44, "Diagnosis Procedure"
- Models without Intelligent Key system: BCS-123, "Diagnosis Procedure"

Is the inspection result normal?

YES (Present error)>>Replace the BCM. Refer to the following.
- Models with Intelligent Key system: BCS-88, "Exploded View"
- Models without Intelligent Key system: BCS-155, "Exploded View"

YES (Past error)>>Error was detected in the BCM branch line.
NO >> Repair the power supply and the ground circuit.

CAN COMMUNICATION CIRCUIT

Diagnosis Procedure

INFOID:0000000010243537

1. CONNECTOR INSPECTION

1. Turn the ignition switch OFF.
2. Disconnect the battery cable from the negative terminal.
3. Disconnect all the unit connectors on CAN communication system.
4. Check terminals and connectors for damage, bend and loose connection.

Is the inspection result normal?

YES >> GO TO 2.
NO >> Repair the terminal and connector.

2. CHECK HARNESS CONTINUITY (SHORT CIRCUIT)

Check the continuity between the data link connector terminals.

Data link connector			Continuity
Connector No.	Terminal No.		
M4	6	14	Not existed

Is the inspection result normal?

YES >> GO TO 3.
NO >> Check the harness and repair the root cause.

3. CHECK HARNESS CONTINUITY (SHORT CIRCUIT)

Check the continuity between the data link connector and the ground.

Data link connector		Ground	Continuity
Connector No.	Terminal No.		
M4	6		Not existed
	14		Not existed

Is the inspection result normal?

YES >> GO TO 4.
NO >> Check the harness and repair the root cause.

4. CHECK ECM AND BCM TERMINATION CIRCUIT

1. Remove the ECM and the BCM.
2. Check the resistance between the ECM terminals.

1 : ECM or BCM

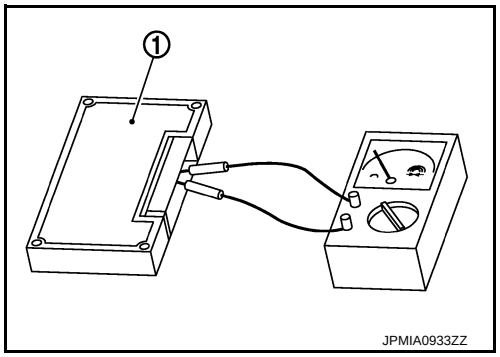

ECM		Resistance (Ω)
Terminal No.		
84	83	Approx. 108 – 132

3. Check the resistance between the BCM terminals.

BCM		Resistance (Ω)
Terminal No.		
39	40	Approx. 108 – 132

Is the measurement value within the specification?

YES >> GO TO 5.
NO >> Replace the ECM and/or the BCM.

5. CHECK SYMPTOM

Connect all the connectors. Check if the symptoms described in the “Symptom (Results from interview with customer)” are reproduced.

Inspection result

Reproduced>>GO TO 6.
Non-reproduced>>Start the diagnosis again. Follow the trouble diagnosis procedure when past error is detected.

6.CHECK UNIT REPRODUCTION

Perform the reproduction test as per the following procedure for each unit.

1. Turn the ignition switch OFF.
2. Disconnect the battery cable from the negative terminal.
3. Disconnect one of the unit connectors of CAN communication system.
   NOTE:
   ECM and BCM have a termination circuit. Check other units first.
4. Connect the battery cable to the negative terminal. Check if the symptoms described in the “Symptom (Results from interview with customer)” are reproduced.
   NOTE:
   Although unit-related error symptoms occur, do not confuse them with other symptoms.

Inspection result

Reproduced>>Connect the connector. Check other units as per the above procedure.
Non-reproduced>>Replace the unit whose connector was disconnected.