HYUNDAI

OWNER'S MANUAL

Operation
Maintenance
Specifications

All information in this Owner's Manual is current at the time of publication. However, Hyundai reserves the right to make changes at any time so that our policy of continual product improvement may be carried out.

This manual applies to all Hyundai models and includes descriptions and explanations of optional as well as standard equipment. As a result, you may find material in this manual that does not apply to your specific vehicle.

Please note that some models are equipped with Right-Hand Drive (RHD). The explanations and illustrations for some operations in RHD models are opposite of those written in this manual.

CAUTION: MODIFICATIONS TO YOUR HYUNDAI

Your Hyundai should not be modified in any way. Such modifications may adversely affect the performance, safety or durability of your Hyundai and may, in addition, violate conditions of the limited warranties covering the vehicle. Certain modifications may also be in violation of regulations established by the Department of Transportation and other government agencies in your country.

TWO-WAY RADIO OR CELLULAR TELEPHONE INSTALLATION

Your vehicle is equipped with electronic fuel injection and other electronic components. It is possible for an improperly installed/adjusted two-way radio or cellular telephone to adversely affect electronic systems. For this reason, we recommend that you carefully follow the radio manufacturer's instructions or consult your Hyundai dealer for precautionary measures or special instructions if you choose to install one of these devices.

SAFETY AND VEHICLE DAMAGE WARNING

This manual includes information titled as WARNING, CAUTION and NOTICE.
These titles indicate the following:

⚠ WARNING
This indicates that a condition may result in harm, serious injury or death to you or other persons if the warning is not heeded. Follow the advice provided with the warning.

⚠ CAUTION
This indicates that a condition may result in damage to your vehicle or its equipment if the caution is not heeded. Follow the advice provided with the caution.

✻ NOTICE
This indicates that interesting or helpful information is being provided.

FOREWORD

Thank you for choosing Hyundai. We are pleased to welcome you to the growing number of discriminating people who drive Hyundais. The advanced engineering and high-quality construction of each Hyundai we build is something of which we're very proud.

Your Owner's Manual will introduce you to the features and operation of your new Hyundai. It is suggested that you read it carefully because the information it contains can contribute greatly to the satisfaction you receive from your new car.

The manufacturer also recommends that all service and maintenance on your car be performed by an authorized Hyundai dealer. Hyundai dealers are prepared to provide high-quality service, maintenance and any other assistance that may be required.

HYUNDAI MOTOR COMPANY

Note : Because future owners will also need the information included in this manual, if you sell this Hyundai, please leave the manual in the vehicle for their use. Thank you.

⚠ **CAUTION**

Severe engine and transaxle damage may result from the use of poor quality fuels and lubricants that do not meet Hyundai specifications. You must always use high quality fuels and lubricants that meet the specifications listed on Page 8-5 in the Vehicle Specifications section of the Owner's Manual.

Copyright 2011 Hyundai Motor Company. All rights reserved. No part of this publication may be reproduced, stored in any retrieval system or transmitted in any form or by any means without the prior written permission of Hyundai Motor Company.

Guide to Hyundai Genuine Parts

1. What are Hyundai Genuine Parts?

Hyundai Genuine Parts are the same parts used by Hyundai Motor Company to manufacture vehicles. They are designed and tested for the optimum safety, performance, and reliability to our customers.

2. Why should you use genuine parts?

Hyundai Genuine Parts are engineered and built to meet rigid manufacturing requirements. Using imitation, counterfeit or used salvage parts is not covered under the Hyundai New Vehicle Limited Warranty or any other Hyundai warranty.

In addition, any damage to or failure of Hyundai Genuine Parts caused by the installation or failure of an imitation, counterfeit or used salvage part is not covered by any Hyundai Warranty.

3. How can you tell if you are purchasing Hyundai Genuine Parts?

Look for the Hyundai Genuine Parts Logo on the package (see below).

Hyundai Genuine Parts exported to are packaged with labels written only in English.

Hyundai Genuine Parts are only sold through authorized Hyundai Dealerships.

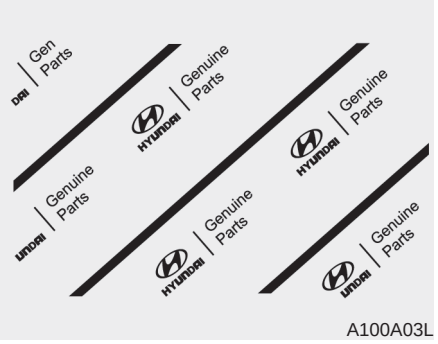

A100A03L

A100A01L

A100A02L

A100A04L

TABLE OF CONTENTS

Introduction	1
Your vehicle at a glance	2
Safety system of your vehicle	3
Features of your vehicle	4
Driving your vehicle	5
What to do in an emergency	6
Maintenance	7
Specifications & Consumer information	8
Index	I

Introduction

1

How to use this manual / 1-2
Fuel requirements / 1-2
Vehicle break-in process / 1-5
Indicator symbols on the instrument cluster / 1-6

HOW TO USE THIS MANUAL

We want to help you get the greatest possible driving pleasure from your vehicle. Your Owner's Manual can assist you in many ways. We strongly recommend that you read the entire manual. In order to minimize the chance of death or injury, you must read the WARNING and CAUTION sections in the manual.

Illustrations complement the words in this manual to best explain how to enjoy your vehicle. By reading your manual, you will learn about features, important safety information, and driving tips under various road conditions.

The general layout of the manual is provided in the Table of Contents. Use the index when looking for a specific area or subject; it has an alphabetical listing of all information in your manual.

Sections: This manual has eight sections plus an index. Each section begins with a brief list of contents so you can tell at a glance if that section has the information you want.

You will find various WARNINGS, CAUTIONS, and NOTICES in this manual. These were prepared to enhance your personal safety. You should carefully read and follow ALL procedures and recommendations provided in these WARNINGS, CAUTIONS and NOTICES.

⚠ WARNING

A WARNING indicates a situation in which harm, serious bodily injury or death could result if the warning is ignored.

⚠ CAUTION

A CAUTION indicates a situation in which damage to your vehicle could result if the caution is ignored.

✻ NOTICE

A NOTICE indicates interesting or helpful information is being provided.

FUEL REQUIREMENTS

Gasoline engine

Unleaded

For Europe

For the optimal vehicle performance, we recommend you to use unleaded gasoline which complies with EN 228 and has an octane rating of RON (Research Octane Number) 95 / AKI (Anti Knock Index) 91 or higher. You may use unleaded gasoline with an octane rating of RON 91-94 / AKI 87-90 but it may result in slight performance reduction of the vehicle.

Except Europe

Your new vehicle is designed to use only unleaded fuel having an Octane Rating of RON (Research Octane Number) 91 / AKI (Anti-Knock Index) 87 or higher.

Your new vehicle is designed to obtain maximum performance with UNLEADED FUEL, as well as minimize exhaust emissions and spark plug fouling.

⚠ CAUTION

NEVER USE LEADED FUEL. The use of leaded fuel is detrimental to the catalytic converter and will damage the engine control system's oxygen sensor and affect emission control.

Never add any fuel system cleaning agents to the fuel tank other than what has been specified. (Consult an authorized HYUNDAI dealer for details.)

⚠ WARNING

- **Do not "top off" after the nozzle automatically shuts off when refueling.**
- **Always check that the fuel cap is installed securely to prevent fuel spillage in the event of an accident.**

Leaded (if equipped)

For some countries, your vehicle is designed to use leaded gasoline. When you are going to use leaded gasoline, ask an authorized HYUNDAI dealer whether leaded gasoline in your vehicle is available or not.

Octane Rating of leaded gasoline is same with unleaded one.

Gasoline containing alcohol and methanol

Gasohol, a mixture of gasoline and ethanol (also known as grain alcohol), and gasoline or gasohol containing methanol (also known as wood alcohol) are being marketed along with or instead of leaded or unleaded gasoline.

Do not use gasohol containing more than 10% ethanol, and do not use gasoline or gasohol containing any methanol. Either of these fuels may cause drivability problems and damage to the fuel system.

Discontinue using gasohol of any kind if drivability problems occur.

Vehicle damage or driveability problems may not be covered by the manufacturer's warranty if they result from the use of:

1. Gasohol containing more than 10% ethanol.
2. Gasoline or gasohol containing methanol.
3. Leaded fuel or leaded gasohol.

⚠ CAUTION

Never use gasohol which contains methanol. Discontinue use of any gasohol product which impairs drivability.

Use of MTBE

HYUNDAI recommends avoiding fuels containing MTBE (Methyl Tertiary Butyl Ether) over 15.0% vol. (Oxygen Content 2.7% weight) in your vehicle.

Fuel containing MTBE over 15.0% vol. (Oxygen Content 2.7% weight) may reduce vehicle performance and produce vapor lock or hard starting.

⚠ CAUTION

Your New Vehicle Limited Warranty may not cover damage to the fuel system and any performance problems that are caused by the use of fuels containing methanol or fuels containing MTBE (Methyl Tertiary Butyl Ether) over 15.0% vol. (Oxygen Content 2.7% weight.)

Do not use methanol

Fuels containing methanol (wood alcohol) should not be used in your vehicle. This type of fuel can reduce vehicle performance and damage components of the fuel system.

Fuel Additives

HYUNDAI recommends that you use good quality gasolines meet Europe Fuel standards (EN228) or equivalents.

For customers who do not use good quality gasolines including fuel additives regularly, and have problems starting or the engine does not run smoothly, one bottle of additives added to the fuel tank at every 15,000km (for Europe)/ 5,000km (except Europe). Additives are available from your authorized HYUNDAI dealer along with information on how to use them. Do not mix other additives.

Operation in foreign countries

If you are going to drive your vehicle in another country, be sure to:

- Observe all regulations regarding registration and insurance.
- Determine that acceptable fuel is available.

Diesel engine

Diesel fuel

Diesel engine must be operated only on commercially available diesel fuel that complies with EN 590 or comparable standard. (EN stands for "European Norm"). Do not use marine diesel fuel, heating oils, or non-approved fuel additives, as this will increase wear and cause damage to the engine and fuel system. The use of non-approved fuels and / or fuel additives will result in a limitation of your warranty rights.

Diesel fuel of above cetane 51 is used in your vehicle. If two types of diesel fuel are available, use summer or winter fuel properly according to the following temperature conditions.

- Above -5°C (23°F) ... Summer type diesel fuel.
- Below -5°C (23°F) ... Winter type diesel fuel.

Watch the fuel level in the tank very carefully : If the engine stops through fuel failure, the circuits must be completely purged to permit restarting.

⚠ **CAUTION**

Do not let any gasoline or water enter the tank. This would make it necessary to drain it out and to bleed the lines to avoid jamming the injection pump and damaging the engine.

⚠ **CAUTION - Diesel Fuel (if equipped with DPF)**

It is recommended to use the regulated automotive diesel fuel for diesel vehicle equipped with the DPF system.

If you use diesel fuel including high sulfur (more than 50 ppm sulfur) and unspecified additives, it can cause the DPF system to be damaged and white smoke can be emitted.

Biodiesel

Commercially supplied Diesel blends of no more than 7% biodiesel, commonly known as "B7 Diesel" may be used in your vehicle if Biodiesel meets EN 14214 or equivalent specifications. (EN stands for "European Norm"). The use of biofuels exceeding 7% made from rapeseed methyl ester (RME), fatty acid methyl ester (FAME), vegetable oil methyl ester (VME) etc. or mixing diesel exceeding 7% with biodiesel will cause increased wear or damage to the engine and fuel system. Repair or replacement of worn or damaged components due to the use of non approved fuels will not be covered by the manufactures warranty.

⚠ **CAUTION**

- ***Never use any fuel, whether diesel, B7 biodiesel or otherwise, that fails to meet the latest petroleum industry specification.***
- ***Never use any fuel additives or treatments that are not recommended or approved by the vehicle manufacturer.***

VEHICLE BREAK-IN PROCESS

No special break-in period is needed. By following a few simple precautions for the first 1,000 km (600 miles) you may add to the performance, economy and life of your vehicle.

- Do not race the engine.
- While driving, keep your engine speed (rpm, or revolutions per minute) between 2,000 rpm and 4,000 rpm.
- Do not maintain a single speed for long periods of time, either fast or slow. Varying engine speed is needed to properly break-in the engine.
- Avoid hard stops, except in emergencies, to allow the brakes to seat properly.
- Don't let the engine idle longer than 3 minutes at one time.
- Don't tow a trailer during the first 2,000 km (1,200 miles) of operation.

INDICATOR SYMBOLS ON THE INSTRUMENT CLUSTER

- Seat belt warning light
- Air bag warning light
- Immobilizer indicator
- Door ajar warning light
- Tailgate open warning light
- Low fuel level warning light
- Electronic power steering (EPS) system warning light
- Turn signal indicator
- Light on indicator
- Low beam indicator*
- High beam indicator
- AFLS — Adaptive Front Lighting System (AFLS) malfunction indicator*
- Front fog light indicator*
- Rear fog light indicator*
- Low windshield washer fluid level warning light
- Icy road warning light*
- Manual transaxle shift indicator
- Shift pattern indicator
- SPORT — Sport drive mode indicator*
- BRAKE — Parking brake & Brake fluid warning light
- EPB — Electric parking brake (EPB) malfunction indicator
- AUTO HOLD — AUTO HOLD indicator*
- ABS — ABS warning light
- Electronic stability program (ESP) indicator
- OFF — Electronic stability program (ESP) OFF indicator
- Auto stop for ISG system indicator*
- CRUISE OFF — Cruise control indicator*
- CRUISE SET — Cruise SET indicator*
- LIMIT OFF — Speed limit indicator*
- Lane Keeping Assistant System (LAKS) indicator*
- Low tire pressure telltale*/ TPMS malfunction indicator*
- Engine oil pressure warning light
- Engine oil level warning light*

Malfunction indicator

Engine coolant temperature warning light

Glow indicator (Diesel only)

Fuel filter warning light (Diesel only)

Charging system warning light

120 km/h Overspeed warning light*

* : if equipped

❈ For more detailed explanations, refer to section 4, “Instrument cluster”.

Your vehicle at a glance

2

Instrument panel overview / 2-2
Interior overview / 2-6
Engine compartment / 2-8

INSTRUMENT PANEL OVERVIEW

■ Left-Hand drive type

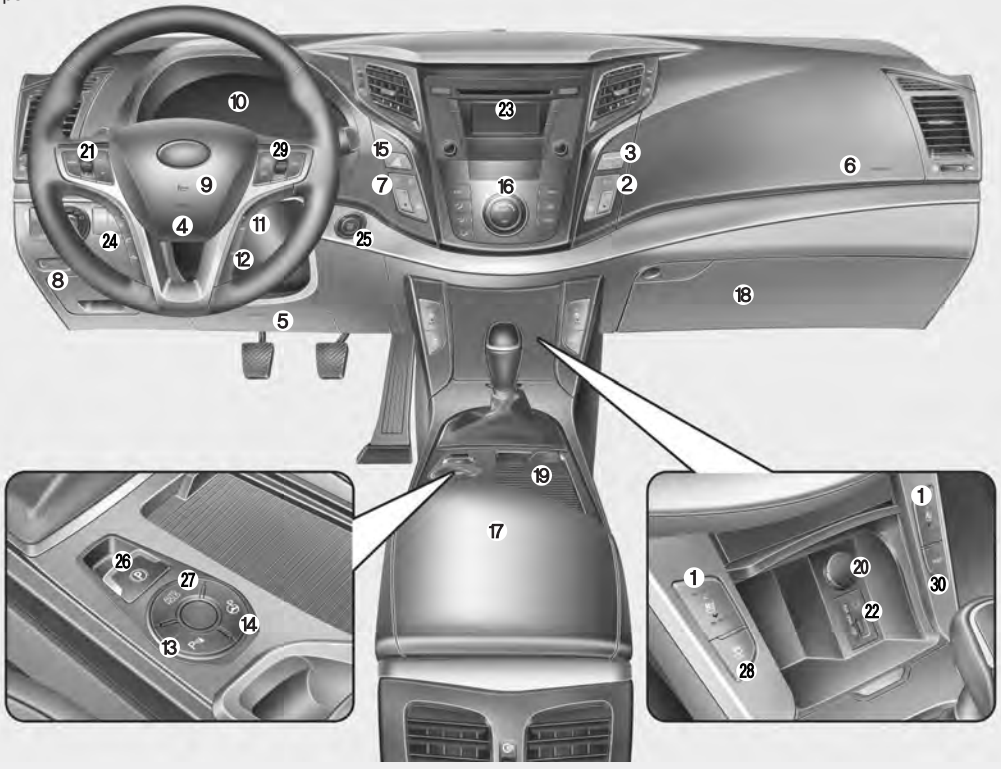

❈ The actual shape may differ from the illustration.

OVF021002

1. Seat warmer/Air ventilation seat* 3-10/3-11
2. Front passenger's seat belt warning light* 3-19
3. Passenger's front air bag ON/OFF indicator*.....3-44
4. Driver's front air bag 3-48
5. Driver's knee air bag* 3-48
6. Passenger's front air bag* 3-48
7. Central door lock/unlock switch 4-16
8. Power tailgate open button* 4-21
9. Horn.....4-43
10. Instrument cluster 4-48
11. LCD display button 4-53
12. Trip button 4-53
13. Parking assist system button* 4-79
14. Smart parking assist system button*.....4-88
15. Hazard warning flasher 4-95
16. Climate control system 4-112/4-121
17. Center console storage 4-136
18. Glove box 4-136
19. Cup holder/Ashtray* 4-141/4-140
20. Power outlet/Cigarette lighter*.....4-142/4-140
21. Steering wheel audio controls* 4-154
22. AUX, USB and ipod.....4-143
23. Audio/AVN system .....4-158, 4-181/Separate Manual
24. Bluetooth phone controls* 4-175,4-196
25. Ignition switch or Engine start/stop button 5-4/5-8
26. Electric parking brake(EPB) switch 5-31
27. Auto hold control button* 5-36
28. Electronic stability program (ESP) button 5-41
29. Cruise control switch* / Speed limiter switch* 5-48/5-53
30. Sport drive mode button* 5-26

* : if equipped

■ Right-Hand drive type

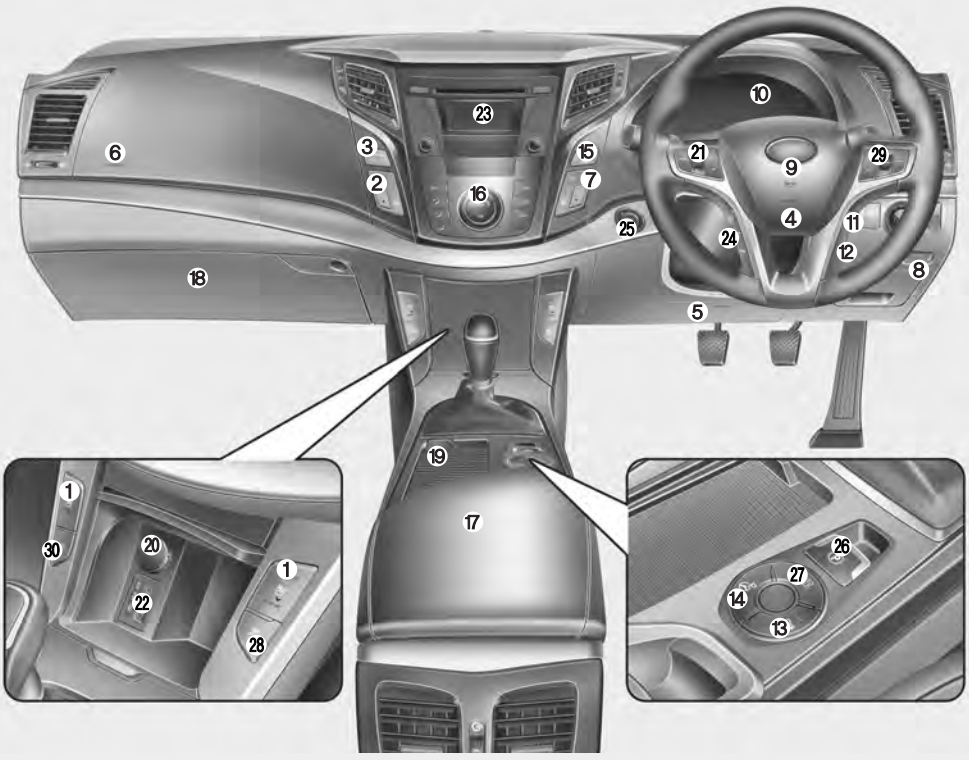

❊ The actual shape may differ from the illustration.

OVF021002R

1. Seat warmer/Air ventilation seat* 3-10/3-11
2. Front passenger's seat belt warning light* 3-19
3. Passenger's front air bag ON/OFF indicator*.....3-44
4. Driver's front air bag 3-48
5. Driver's knee air bag* 3-48
6. Passenger's front air bag* 3-48
7. Central door lock/unlock switch 4-16
8. Power tailgate open button* 4-21
9. Horn.....4-43
10. Instrument cluster 4-48
11. LCD display button 4-53
12. Trip button 4-53
13. Parking assist system button* 4-79
14. Smart parking assist system button*.....4-88
15. Hazard warning flasher 4-95
16. Climate control system 4-112/4-121
17. Center console storage 4-136
18. Glove box 4-136
19. Cup holder/Ashtray* 4-141/4-140
20. Power outlet/Cigarette lighter*.....4-142/4-140
21. Steering wheel audio controls* 4-154
22. AUX, USB and ipod.....4-143
23. Audio/AVN system .....4-158, 4-181/Separate Manual
24. Bluetooth phone controls* 4-175,4-196
25. Ignition switch or Engine start/stop button 5-4/5-8
26. Electric parking brake(EPB) switch 5-31
27. Auto hold control button* 5-36
28. Electronic stability program (ESP) button 5-41
29. Cruise control switch* / Speed limiter switch* 5-48/5-53
30. Sport drive mode button* 5-26

* : if equipped

INTERIOR OVERVIEW

■ Left-Hand drive type

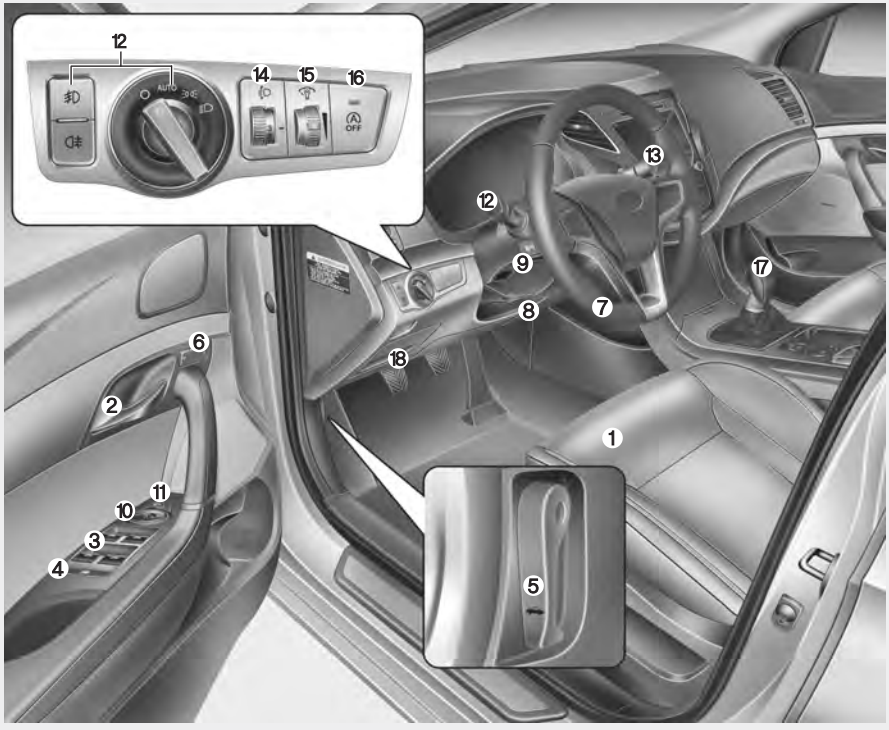

1. Seat.....3-2
2. Inside door handle 4-16
3. Power window switch 4-26
4. Power window lock switch.....4-29
5. Hood release lever 4-30
6. Driver position memory seat* 4-39
7. Steering wheel 4-41
8. Tilt and telescopic steering control lever ..4-42
9. Heated steering wheel*.....4-42
10. Outside rearview mirror control.....4-46
11. Outside rearview mirror folding* 4-47
12. Light switch 4-97
13. Wiper/Washer 4-104
14. Headlight leveling device*.....4-102
15. Instrument panel illumination control system.....4-49
16. Idle Stop and Go (ISG) OFF button* ..5-14
17. Manual transaxle shift lever/ Automatic transaxle shift lever 5-19/5-22
18. Fuse box 7-72

* : if equipped

❈ The actual shape may differ from the illustration.

OVF021001

■ Right-Hand drive type

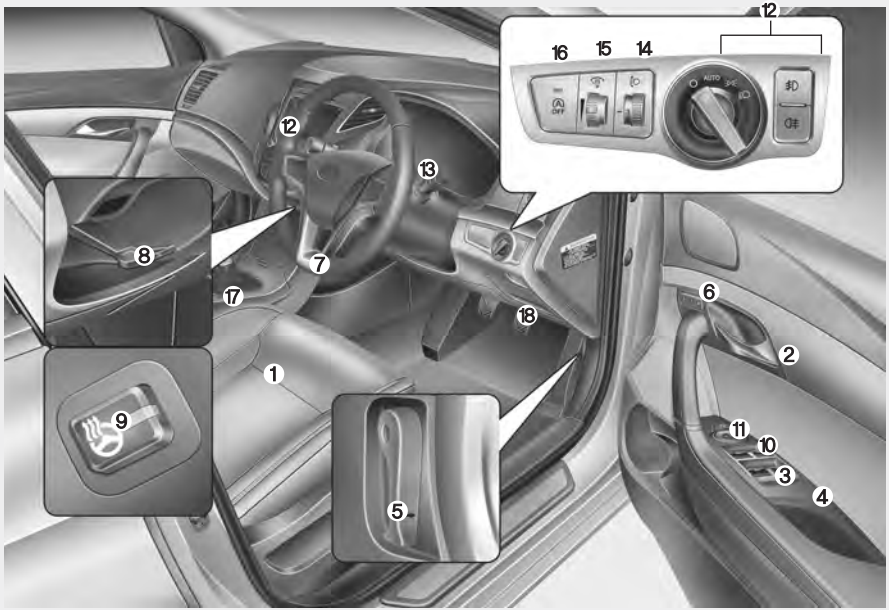

1. Seat.....3-2
2. Inside door handle 4-16
3. Power window switch 4-26
4. Power window lock switch.....4-29
5. Bonnet release lever 4-30
6. Driver position memory seat* 4-39
7. Steering wheel 4-41
8. Tilt and telescopic steering control lever ..4-42
9. Heated steering wheel*.....4-42
10. Outside rearview mirror control.....4-46
11. Outside rearview mirror folding* 4-47
12. Light switch 4-97
13. Wiper/Washer 4-104
14. Headlight leveling device*.....4-102
15. Instrument panel illumination control system.....4-49
16. Idle Stop and Go (ISG) OFF button* ..5-14
17. Manual transaxle shift lever/ Automatic transaxle shift lever 5-19/5-22
18. Fuse box 7-72

* : if equipped

❊ The actual shape may differ from the illustration.

OVF021001R-1

ENGINE COMPARTMENT

■ **Gasoline (1.6L)**

• Left-Hand drive type

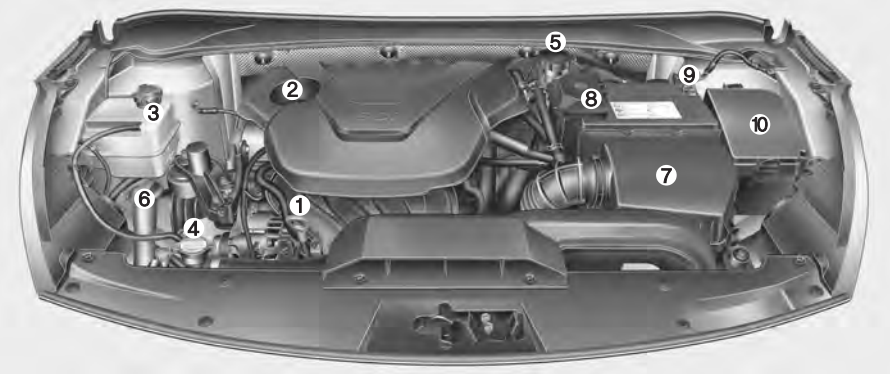

• Right-Hand drive type

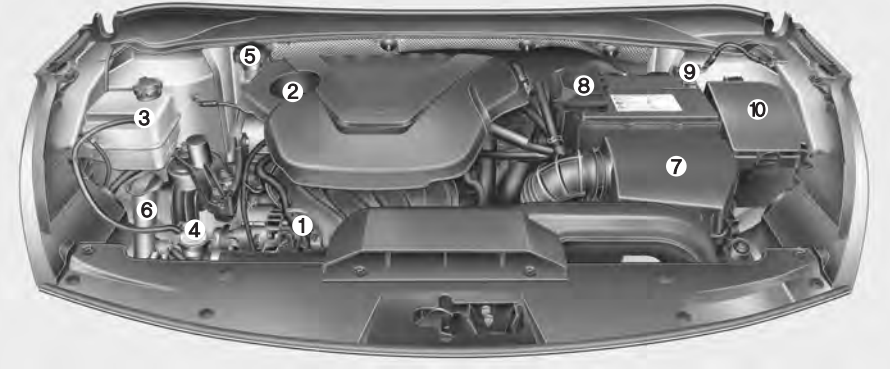

1. Engine oil dipstick.....7-44
2. Engine oil filler cap 7-44
3. Engine coolant reservoir.....7-46
4. Radiator cap 7-47
5. Brake/clutch* fluid reservoir.....7-48
6. Windshield washer fluid reservoir....7-49
7. Air cleaner 7-51
8. Positive battery terminal 7-58
9. Negative battery terminal 7-58
10. Fuse box.....7-73

* : if equipped

❊ The actual engine room in the vehicle may differ from the illustration.

OVF071002/OVF071002R

■ **Gasoline (2.0L)**

• Left-Hand drive type

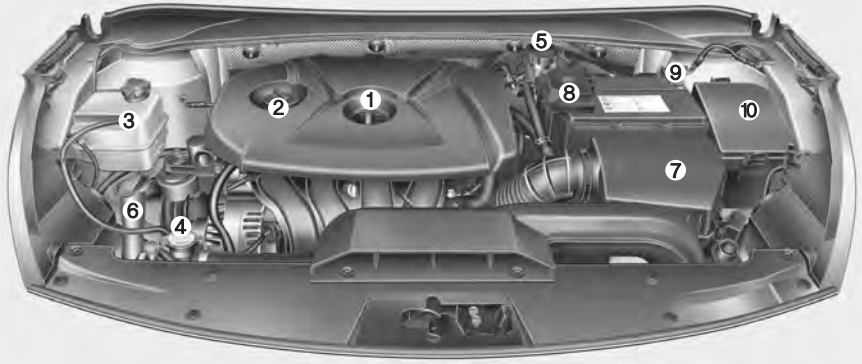

• Right-Hand drive type

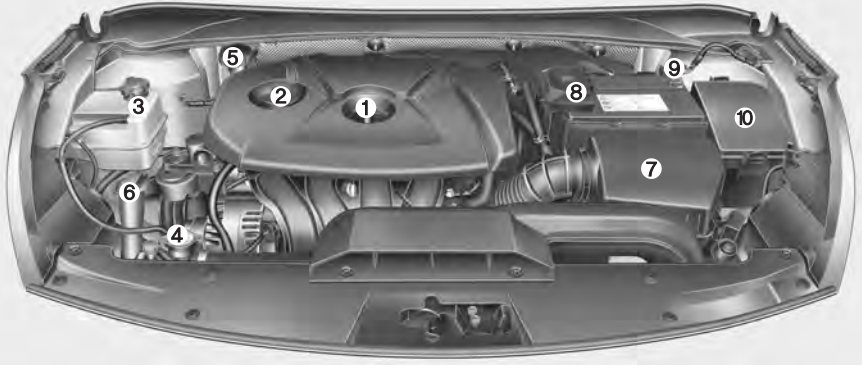

1. Engine oil dipstick.....7-44
2. Engine oil filler cap 7-44
3. Engine coolant reservoir.....7-46
4. Radiator cap 7-47
5. Brake/clutch* fluid reservoir.....7-48
6. Windshield washer fluid reservoir....7-49
7. Air cleaner 7-51
8. Positive battery terminal 7-58
9. Negative battery terminal 7-58
10. Fuse box.....7-73

* : if equipped

❊ The actual engine room in the vehicle may differ from the illustration.

OVF071001/OVF071001R

■ **Diesel Engine (1.7L)**

• Left-Hand drive type

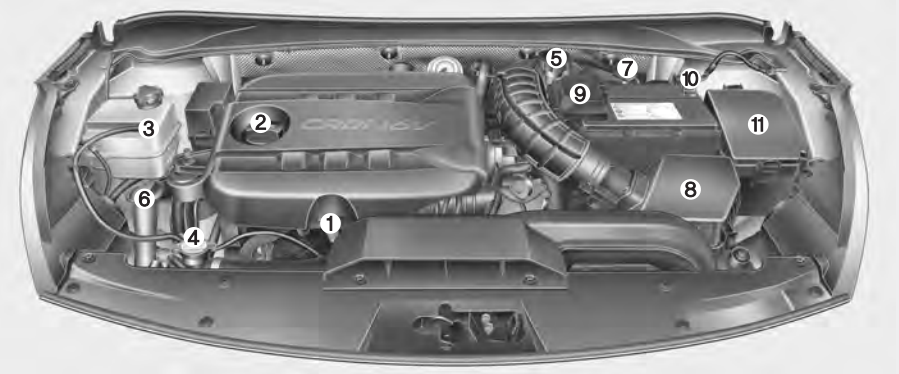

• Right-Hand drive type

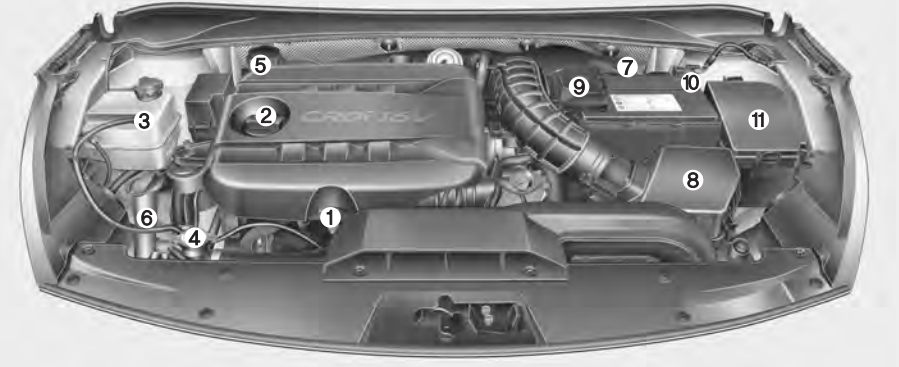

1. Engine oil dipstick.....7-44
2. Engine oil filler cap 7-44
3. Engine coolant reservoir.....7-46
4. Radiator cap 7-47
5. Brake/clutch* fluid reservoir.....7-48
6. Windshield washer fluid reservoir....7-49
7. Fuel filter 7-50
8. Air cleaner 7-51
9. Positive battery terminal 7-58
10. Negative battery terminal 7-58
11. Fuse box 7-73

* : if equipped

❊ The actual engine room in the vehicle may differ from the illustration.

OVF071003/OVF071003R

Seat / 3-2
Seat belts / 3-18
Child restraint system / 3-29
Airbag-supplemental restraint system / 3-40

Safety system of your vehicle

3

SEAT

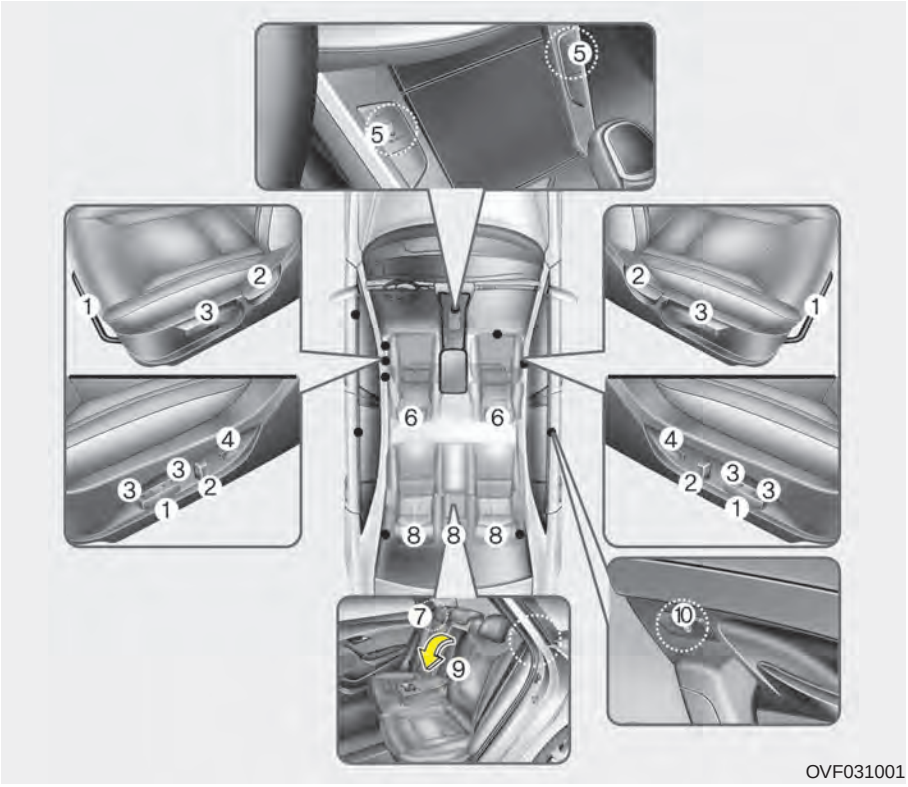

Front seat

(1) Forward and backward
(2) Seatback angle
(3) Seat cushion height*
(4) Lumbar support
(5) Seat warmer*/
Seat warmer with air ventilation*
(6) Headrest

Rear seat

(7) Seatback folding
(8) Headrest
(9) Armrest
(10) Seat warmer*

* : if equipped

⚠ WARNING - Loose objects

Loose objects in the driver's foot area could interfere with the operation of the foot pedals, possibly causing an accident. Do not place anything under the front seats.

⚠ WARNING - Uprighting seat

When you return the seatback to its upright position, hold the seatback and return it slowly and be sure there are no other occupants around the seat. If the seatback is returned without being held and controlled, the back of the seat could spring forward resulting in accidental injury to a person struck by the seatback.

⚠ WARNING - Driver responsibility for front seat passenger

Riding in a vehicle with a front seatback reclined could lead to serious or fatal injury in an accident. If a front seat is reclined during an accident, the occupant's hips may slide under the lap portion of the seat belt applying great force to the unprotected abdomen. Serious or fatal internal injuries could result. The driver must advise the front passenger to keep the seatback in an upright position whenever the vehicle is in motion.

⚠ WARNING

Do not use a sitting cushion that reduces friction between the seat and passenger. The passenger's hips may slide under the lap portion of the seat belt during an accident or a sudden stop. Serious or fatal internal injuries could result because the seat belt can't operate normally.

⚠ WARNING - Driver's seat

- **Never attempt to adjust seat while the vehicle is moving. This could result in loss of control, and an accident causing death, serious injury, or property damage.**
- **Do not allow anything to interfere with the normal position of the seatback. Storing items against a seatback or in any other way interfering with proper locking of a seatback could result in serious or fatal injury in a sudden stop or collision.**
- **Always drive and ride with your seatback upright and the lap portion of the seat belt snug and low across the hips. This is the best position to protect you in case of an accident.**
- **In order to avoid unnecessary and perhaps severe air bag injuries, always sit as far back as possible from the steering wheel while maintaining comfortable control of the vehicle. It is recommended that your chest is at least 250 mm (10 inches) away from the steering wheel.**

⚠ WARNING - Rear seatbacks

- **The rear seatback must be securely latched. If not, passengers and objects could be thrown forward resulting in serious injury or death in the event of a sudden stop or collision.**
- **Luggage and other cargo should be laid flat in the cargo area. If objects are large, heavy, or must be piled, they must be secured. Under no circumstances should cargo be piled higher than the seatbacks. Failure to follow these warnings could result in serious injury or death in the event of a sudden stop, collision or rollover.**
- **No passenger should ride in the cargo area or sit or lie on folded seatbacks while the vehicle is moving. All passengers must be properly seated in seats and restrained properly while riding.**

(Continued)

(Continued)

- **When resetting the seatback to the upright position, make sure it is securely latched by pushing it forward and backwards.**

⚠ WARNING

After adjusting the seat, always check that it is securely locked into place by attempting to move the seat forward or backward without using the lock release lever. Sudden or unexpected movement of the driver's seat could cause you to lose control of the vehicle resulting in an accident.

⚠ WARNING

- **Use extreme caution so that hands or other objects are not caught in the seat mechanisms while the seat is moving.**
- **Do not put a cigarette lighter on the floor or seat. When you operate the seat, gas may gush out of the lighter and cause fire.**

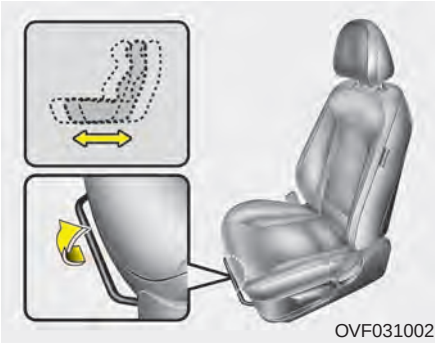
OVF031002

Front seat

Manual adjustment

Forward and backward

To move the seat forward or backward:

1. Pull the seat slide adjustment lever up and hold it.
2. Slide the seat to the position you desire.
3. Release the lever and make sure the seat is locked in place.

Adjust the seat before driving, and make sure the seat is locked securely by trying to move forward and backward without using the lever. If the seat moves, it is not locked properly.

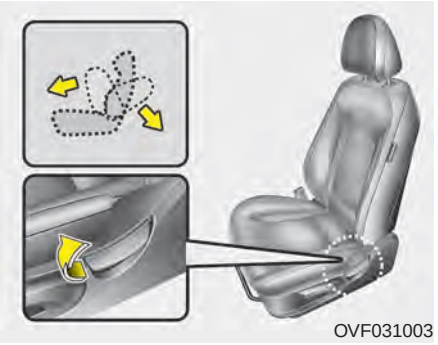
OVF031003

Seatback angle

To recline the seatback:

1. Lean forward slightly and lift up on the seatback recline lever.
2. Carefully lean back on the seat and adjust the seatback of the seat to the position you desire.
3. Release the lever and make sure the seatback is locked in place. (The lever MUST return to its original position for the seatback to lock.)

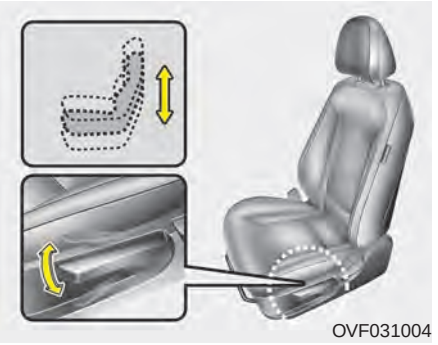
OVF031004

Seat cushion height (if equipped)

To change the height of the seat cushion, push the lever upwards or downwards.

- To lower the seat cushion, push down the lever several times.
- To raise the seat cushion, pull up the lever several times.

Automatic adjustment (if equipped)

The front seat can be adjusted by using the control switches located on the outside of the seat cushion. Before driving, adjust the seat to the proper position so as to easily control the steering wheel, pedals and switches on the instrument panel.

⚠ WARNING

The power seat is operable with the ignition OFF.

Therefore, children should never be left unattended in the car.

⚠ CAUTION

- ***The power seat is driven by an electric motor. Stop operating once the adjustment is completed. Excessive operation may damage the electrical equipment.***
- ***When in operation, the power seat consumes a large amount of electrical power. To prevent unnecessary charging system drain, don't adjust the power seat longer than necessary while the engine is not running.***
- ***Do not operate two or more power seat control switches at the same time. Doing so may result in power seat motor or electrical component malfunction.***

Forward and backward

1. Push the control switch forward or backward to move the seat to the desired position.
2. Release the switch once the seat reaches the desired position.

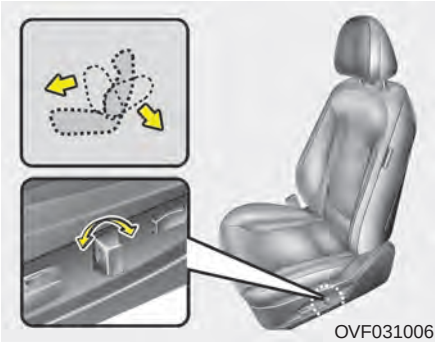
OVF031006

Seatback angle

1. Push the control switch forward or backward to move the seatback to the desired angle.
2. Release the switch once the seat reaches the desired position.

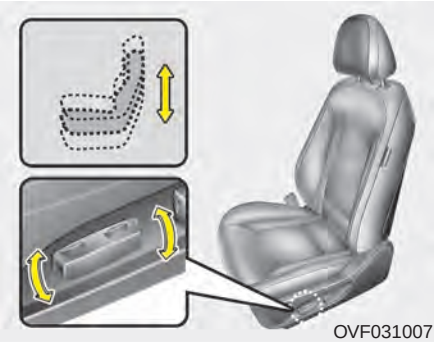
OVF031007

Seat cushion height (if equipped)

1. Pull the front portion of the control switch up to raise or down to lower the front part of the seat cushion. Pull the rear portion of the control switch up to raise or down to lower the rear part of the seat cushion.
2. Release the switch once the seat reaches the desired position.

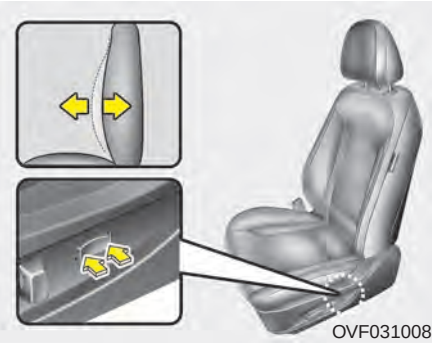
OVF031008

Lumbar support (if equipped)

The lumbar support can be adjusted by pressing the lumbar support switch on the side of the seat.

1. Press the front portion of the switch to increase support, or the rear portion of the switch, to decrease support.
2. Release the switch once it reaches the desired position.

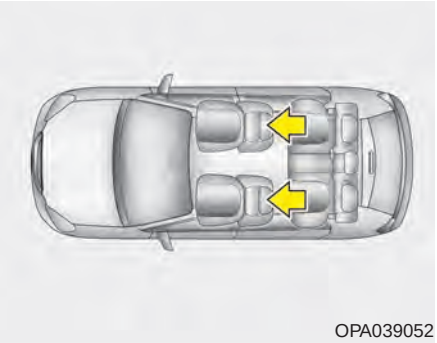
OPA039052

Headrest

The driver's and front passenger's seats are equipped with a headrest for the occupant's safety and comfort.

The headrest not only provides comfort for the driver and front passenger, but also helps protect the head and neck in the event of a collision.

⚠ WARNING

- **For maximum effectiveness in case of an accident, the headrest should be adjusted so the middle of the headrest is at the same height of the center of gravity of an occupant's head. Generally, the center of gravity of most people's head is similar with the height of the top of their eyes. Also, adjust the headrest as close to your head as possible. For this reason, the use of a cushion that holds the body away from the seatback is not recommended.**
- **Do not operate the vehicle with the headrests removed as severe injury to the occupants may occur in the event of an accident. Headrests may provide protection against neck injuries when properly adjusted.**
- **Do not adjust the headrest position of the driver's seat while the vehicle is in motion.**

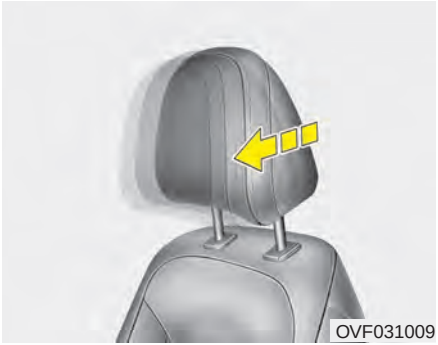
OVF031009

Forward and backward adjustment

The headrest may be adjusted forward to 4 different positions by pulling the headrest forward to the desired detent. To adjust the headrest to it's furthest backwards position, pull it fully forward to the farthest position and release it. Adjust the headrest so that it properly supports the head and neck.

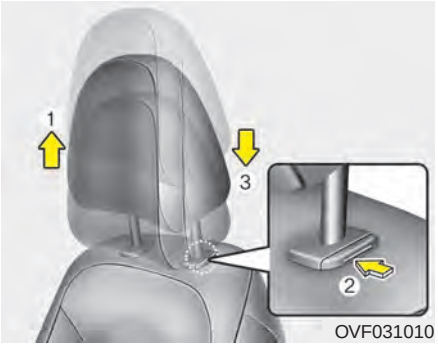

OVF031010

Adjusting the height up and down

To raise the headrest, pull it up to the desired position (1). To lower the headrest, push and hold the release button (2) on the headrest support and lower the headrest to the desired position (3).

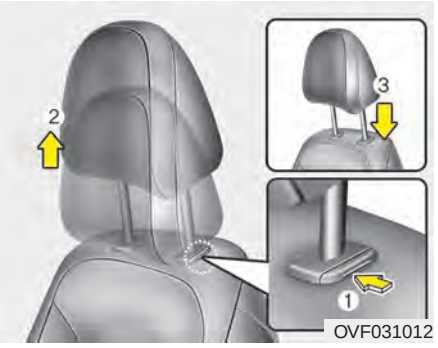

OVF031012

Removal and installation

To remove the headrest, raise it as far as it can go then press the release button (1) while pulling upward (2).

To reinstall the headrest, put the headrest poles (3) into the holes while pressing the release button (1). Then adjust it to the appropriate height.

⚠ WARNING

Make sure the headrest locks in position after adjusting it to properly protect the occupants.

HNF2041-1

Active headrest

The active headrest is designed to move forward and upward during a rear impact. This helps prevent the driver's and front passenger's heads from moving backward and thus helps minimize neck injuries.

⚠ WARNING

A gap between the seat and the headrest release button may appear when seating on the seat or when you push or pull the seat. Be careful not to get your finger, etc. caught in the gap.

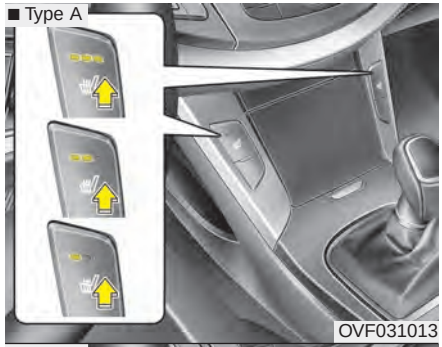

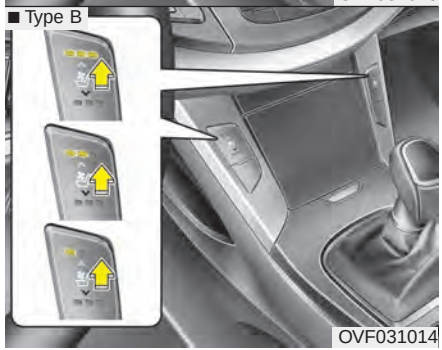

Seat warmer (if equipped)

The seat warmer is provided to warm the front seats during cold weather. With the ignition switch in the ON position, push either of the switches to warm the driver's seat or the front passenger's seat.

During mild weather or under conditions where the operation of the seat warmer is not needed, keep the switches in the "OFF" position.

- Each time you press the switch, the temperature setting of the seat will change as follows :

OFF→HIGH( )→MIDDLE( )→LOW( )

- The seat warmer defaults to the OFF position whenever the ignition switch is turned on.

✻ NOTICE

With the seat warmer switch in ON position, the heating system in the seat turns off or on automatically depending on the seat temperature.

⚠ CAUTION - Seat damage

- ***When cleaning the seats, do not use an organic solvent such as paint thinner, benzene, alcohol and gasoline. Doing so may damage the surface of the heater or seats.***
- ***To prevent overheating the seat warmer, do not place anything on the seats that insulates against heat, such as blankets, cushions or seat covers on the seats while the seat warmer is in operation.***
- ***Do not place heavy or sharp objects on seats equipped with seat warmers. Damage to the seat warming components could occur.***

⚠ WARNING - Seat warmer burns

Passengers should use extreme caution when using seat warmers due to the possibility of excess heating or burns. The occupants must be able to feel if the seat is becoming too warm and to turn the seat warmer off. The seat warmer may cause burns even at low temperatures, especially if used for long periods of time.

In particular, the driver must exercise extreme care for the following types of passengers:

1. **Infants, children, elderly or disabled persons, or hospital outpatients**
2. **Persons with sensitive skin or those that burn easily**
3. **Fatigued individuals**
4. **Intoxicated individuals**
5. **Individuals taking medication that can cause drowsiness or sleepiness (sleeping pills, cold tablets, etc.)**

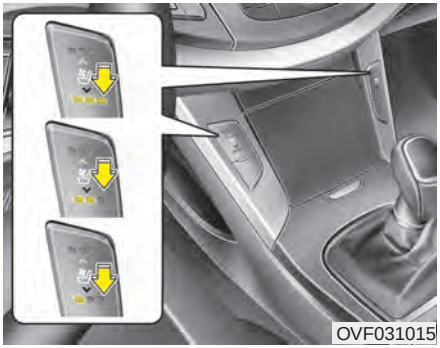

Air ventilation seat (if equipped)

The air ventilation is provided to cool the front seats during hot weather by blowing air through small vent holes on the surface of the seats and seatbacks. While the engine is running, push the rear portion of the switch to cool the driver's seat or the front passenger's seat.

When the operation of the air ventilation is not needed, keep the switches in the OFF position.

- Each time you press the switch, the airflow will change as follows:

OFF→HIGH( )→MIDDLE( )→LOW( )

- When the air ventilation seat is turned on, the seat may get cooler after about 5 minutes.
- The air ventilation seat defaults to the OFF position whenever the ignition switch is turned to the ON position.

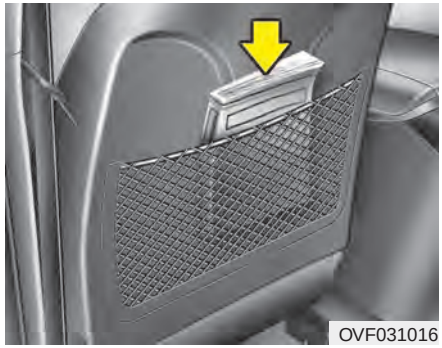
OVF031016

Seatback pocket

The seatback pocket is provided on the back of the front passenger's and driver's seatbacks.

⚠ WARNING - Seatback pocket

Do not put heavy or sharp objects in the seatback pocket. In an accident they could come loose from the pocket and injure vehicle occupants.

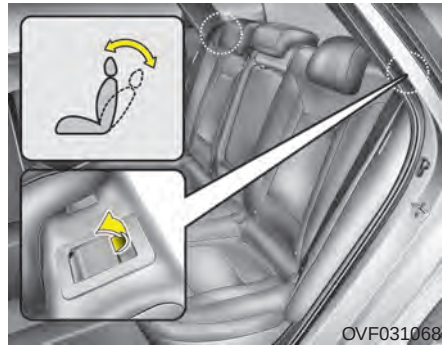
OVF031068

Rear seat

Seatback angle

To recline the seatback:

1. Pull up the seatback recline lever.
2. Hold the lever and adjust the seatback of the seat to the position you desire.
3. Release the lever and make sure the seatback is locked in place. (The lever MUST return to its original position for the seatback to lock.)

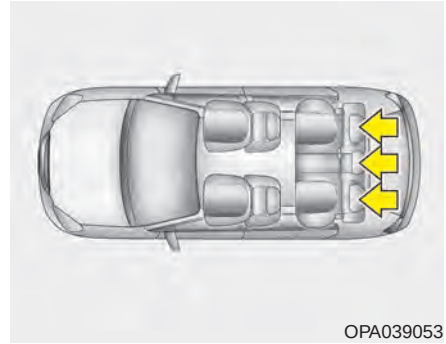
OPA039053

Headrest

The rear seat is equipped with headrests in all the seating positions for the occupant's safety and comfort.

The headrest not only provides comfort for passengers, but also helps protect the head and neck in the event of a collision.

⚠ WARNING

- **For maximum effectiveness in case of an accident, the headrest should be adjusted so the middle of the headrest is at the same height of the center of gravity of an occupant's head. Generally, the center of gravity of most people's head is similar with the height of the top of their eyes. Also adjust the headrest as close to your head as possible. For this reason, the use of a cushion that holds the body away from the seatback is not recommended.**
- **Do not operate the vehicle with the headrests removed. Severe injury to an occupant may occur in the event of an accident. Headrests may provide protection against severe neck injuries when properly adjusted.**

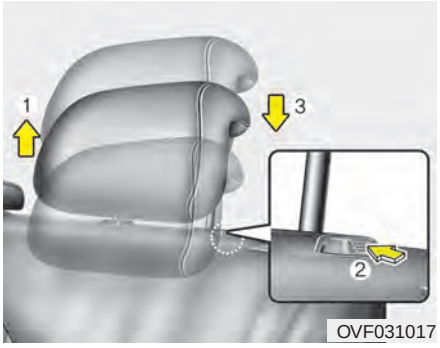

OVF031017

Adjusting the height up and down

To raise the headrest, pull it up to the desired position (1). To lower the headrest, push and hold the release button (2) on the headrest support and lower the headrest to the desired position (3).

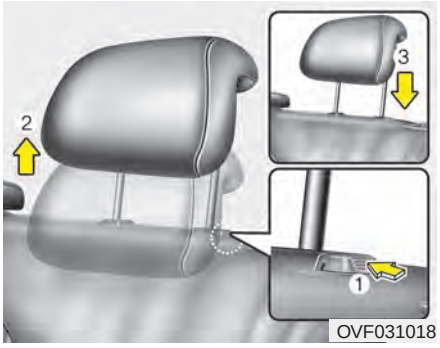

OVF031018

Removal and installation

To remove the headrest, raise it as far as it can go then press the release button (1) while pulling the headrest up (2).

To reinstall the headrest, put the headrest poles (3) into the holes while pressing the release button (1). Then adjust it to the appropriate height.

⚠ WARNING

Make sure the headrest locks in position after adjusting it to properly protect the occupants.

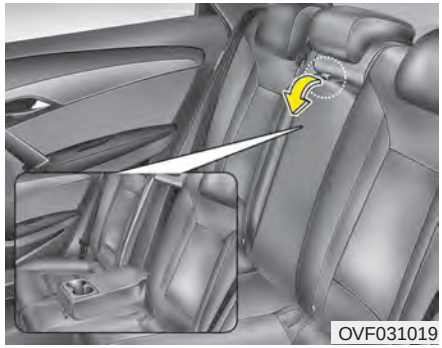

Armrest

To use the armrest, pull it forward from the seatback.

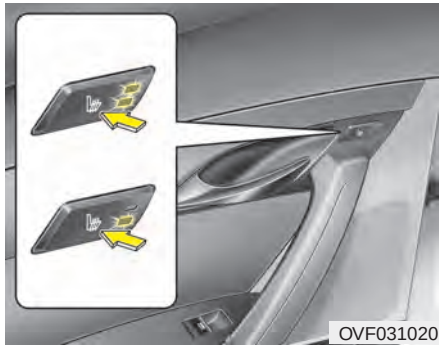

Seat warmer (if equipped)

The seat warmer is provided to warm the rear seats during cold weather. With the ignition switch in the ON position, push either of the switches to warm rear seats.

During mild weather or under conditions where the operation of the seat warmer is not needed, keep the switches in the "OFF" position.

- Each time you press the button, the temperature setting of the seat will change as follows :

OFF → HIGH( ) → LOW( )

- The seat warmer defaults to the OFF position whenever the ignition switch is turned on.

✻ NOTICE

With the seat warmer switch in ON position, the heating system in the seat turns off or on automatically depending on the seat temperature.

⚠ CAUTION - Seat damage

- ***When cleaning the seats, do not use an organic solvent such as paint thinner, benzene, alcohol and gasoline. Doing so may damage the surface of the heater or seats.***
- ***To prevent overheating the seat warmer, do not place anything on the seats that insulates against heat, such as blankets, cushions or seat covers on the seats while the seat warmer is in operation.***
- ***Do not place heavy or sharp objects on seats equipped with seat warmers. Damage to the seat warming components could occur.***

⚠ WARNING - Seat warmer burns

Passengers should use extreme caution when using seat warmers due to the possibility of excess heating or burns. The occupants must be able to feel if the seat is becoming too warm and to turn the seat warmer off. The seat warmer may cause burns even at low temperatures, especially if used for long periods of time.

In particular, the driver must exercise extreme care for the following types of passengers:

1. **Infants, children, elderly or disabled persons, or hospital outpatients**
2. **Persons with sensitive skin or those that burn easily**
3. **Fatigued individuals**
4. **Intoxicated individuals**
5. **Individuals taking medication that can cause drowsiness or sleepiness (sleeping pills, cold tablets, etc.)**

Folding the rear seat

The rear seatbacks can be folded to facilitate carrying long items or to increase the luggage capacity of the vehicle.

⚠ WARNING

The purpose of the fold-down rear seatbacks is to allow you to carry longer objects that could not be accommodated in the cargo area.

Never allow passengers sit on top of the folded down seatback while the vehicle is moving. This is not a proper seating position and no seat belts are available for use. This could result in serious injury or death in case of an accident or sudden stop. Objects carried on the folded down seatback should not extend higher than the top of the front seatbacks. This could allow cargo to slide forward and cause injury or damage during sudden stops.

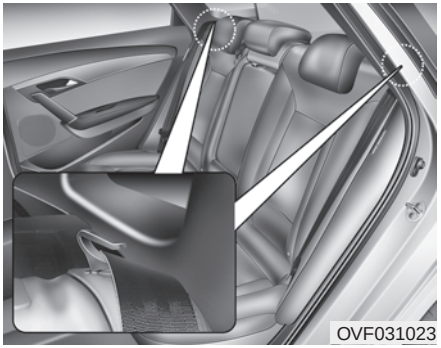

To fold down the rear seatback:

1. Make sure the rear seat belt webbing is in the guide to prevent the seat belt from being damaged.

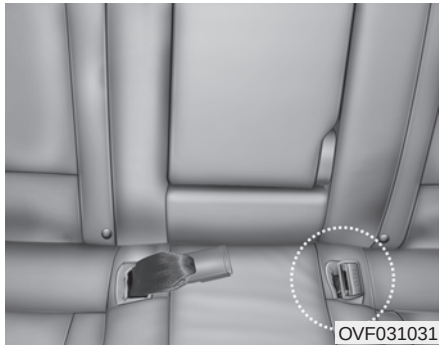
OVF031031

2. Insert the rear seat belt buckle in the pocket between the rear seatback and cushion.
3. Set the front seatback to the upright position and if necessary, slide the front seat forward.
4. Lower the rear headrests to the lowest position.

■ Front

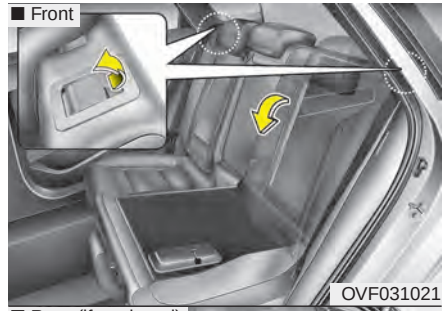
OVF031021

■ Rear (if equipped)

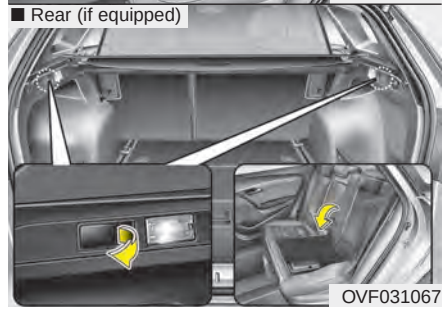
OVF031067

5. Pull on the seatback folding lever, then fold the seat toward the front of the vehicle.

OVF031022

6. To use the rear seat, lift and pull the seatback backward. Pull the seatback firmly until it clicks into place. Make sure the seatback is locked in place.
7. Return the rear seat belt to the proper position.

⚠ WARNING

When you return the rear seatback to its upright position after being folded down:

Be careful not to damage the seat belt webbing or buckle. Do not allow the seat belt webbing or buckle to get caught or pinched in the rear seat. Ensure that the seatback is completely locked into its upright position by pushing on the top of the seatback. Otherwise, in an accident or sudden stop, the seat could fold down and allow cargo to enter the passenger compartment, which could result in serious injury or death.

⚠ WARNING - Uprighting seat

When you return the seatback to its upright position, hold the seatback and return it slowly. If the seatback is returned without holding it, the back of the seat could spring forward resulting in injury caused by being struck by the seatback.

⚠ CAUTION - Damaging rear seat belt buckles

When you fold the rear seatback or put luggage on the rear seat cushion, insert the buckle in the pocket between the rear seatback and cushion. Doing so can prevent the buckle from being damaged by the rear seatback or luggage.

⚠ CAUTION - Rear seat belts

When returning the rear seatbacks to the upright position, remember to return the rear shoulder belts to their proper position. Routing the seat belt webbing through the rear seat belt guides will help keep the belts from being trapped behind or under the seats.

⚠ WARNING - Cargo

Cargo should always be secured to prevent it from being thrown about the vehicle in a collision and causing injury to the vehicle occupants. Special care of objects should be taken when placing them in the rear seats, since those may hit the front seat occupants in a frontal collision.

⚠ WARNING - Cargo loading

Make sure the engine is off, the automatic transaxle is in P (Park) or the manual transaxle is in R (Reverse) or 1st, and the parking brake is securely applied whenever loading or unloading cargo. Failure to take these steps may allow the vehicle to move if the shift lever is inadvertently moved to another position.

SEAT BELTS

Seat belt restraint system

⚠ WARNING

- **For maximum restraint system protection, the seat belts must always be used whenever the car is moving.**
- **Seat belts are most effective when seatbacks are in the upright position.**
- **Children age 12 and younger must always be properly restrained in the rear seat. Never allow children to ride in the front passenger seat. If a child over 12 must be seated in the front seat, he/she must be properly belted and the seat should be moved as far back as possible.**
- **Never wear the shoulder belt under your arm or behind your back. An improperly positioned shoulder belt can cause serious injuries in a crash. The shoulder belt should be positioned midway over your shoulder across your collarbone.**

(Continued)

(Continued)

- **Avoid wearing twisted seat belts. A twisted belt can't do its job as well. In a collision, it could even cut into you. Be sure the belt webbing is straight and not twisted.**
- **Be careful not to damage the belt webbing or hardware. If the belt webbing or hardware is damaged, replace it.**

⚠ WARNING

Seat belts are designed to bear upon the bony structure of the body, and should be worn low across the front of the pelvis or the pelvis, chest and shoulders, as applicable; wearing the lap section of the belt across the abdominal area must be avoided.

Seat belts should be adjusted as firmly as possible, consistent with comfort, to provide the protection for which they have been designed.

A slack belt will greatly reduce the protection afforded to the wearer.

(Continued)

(Continued)

Care should be taken to avoid contamination of the webbing with polishes, oils and chemicals, and particularly battery acid.

Cleaning may safely be carried out using mild soap and water. The belt should be replaced if webbing becomes frayed, contaminated or damaged. It is essential to replace the entire assembly after it has been worn in a severe impact even if damage to the assembly is not obvious. Belts should not be worn with straps twisted. Each belt assembly must only be used by one occupant; it is dangerous to put a belt around a child being carried on the occupant's lap.

⚠ WARNING

- **No modifications or additions should be made by the user which will either prevent the seat belt adjusting devices from operating to remove slack, or prevent the seat belt assembly from being adjusted to remove slack.**
- **When you fasten the seat belt, be careful not to latch the seat belt in buckles of other seat. It's very dangerous and you may not be protected by the seat belt properly.**
- **Do not unfasten the seat belt and do not fasten and unfasten the seat belt repeatedly while driving. This could result in loss of control, and an accident causing death, serious injury, or property damage.**
- **When fastening the seat belt, make sure that the seat belt does not pass over objects that are hard or can break easily.**
- **Make sure there is nothing in the buckle. The seat belt may not be fastened securely.**

Seat belt warning

■ **Type A**

As a reminder to the driver, the seat belt warning light will blink for approximately 6 seconds each time you turn the ignition switch ON regardless of belt fastening.

If the driver's seat belt is unfastened after the ignition switch is ON, the seat belt warning light blinks again for approximately 6 seconds.

If the driver's seat belt is not fastened when the ignition switch is turned ON or if it is unfastened after the ignition switch is ON, the seat belt warning chime will sound for approximately 6 seconds. At this time, if the seat belt is fastened, the chime will stop at once. (if equipped)

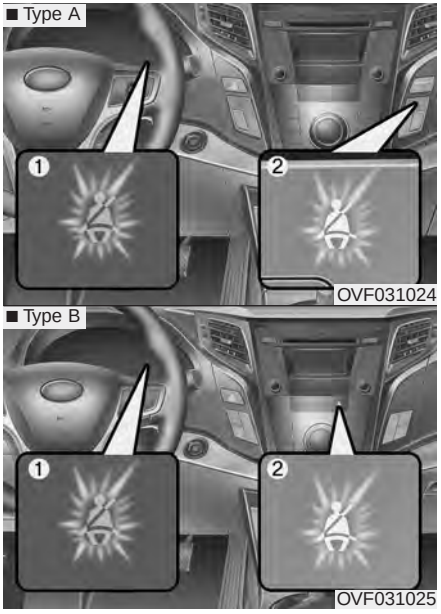

■ **Type B**

(1) Driver's seat belt warning light

(2) Front passenger's seat belt warning light

As a reminder to the driver and passenger, the seatbelt warning light will blink or illuminate and warning chime will sound as follows:

- The seat belt warning light will illuminate for approximately 6 seconds each time you turn the ignition switch ON regardless of belt fastening.
- The seat belt warning light will illuminate if the belt is unfastened after the ignition switch is ON.
- The seat belt warning light will illuminate if the belt is unfastened when the ignition switch is ON.
- If you continue not to fasten the seat belt and you drive over 9 km/h (6 mph), the illuminated warning light will start to blink or illuminate until you drive under 6 km/h (3 mph).
- If you continue not to fasten the seat belt and you drive over 20 km/h (12 mph), the seat belt warning chime will sound for approximately 100 seconds and the corresponding warning light will blink.

✻ NOTICE

- **You can find the front passenger's seat belt warning light on the center fascia panel.**
- **Although the front passenger seat is not occupied, the seat belt warning light will blink or illuminate for 6 seconds.**
- **The front passenger's seat belt warning may operate when luggage is placed on the front passenger seat.**

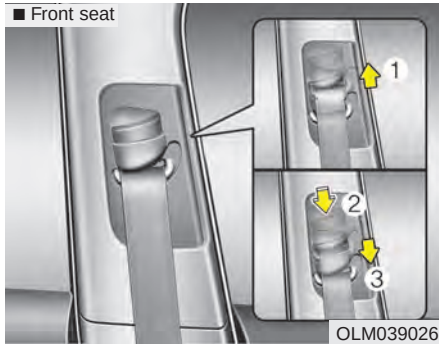

Lap/shoulder belt

Height adjustment

You can adjust the height of the shoulder belt anchor to one of 4 positions for maximum comfort and safety.

The height of the adjusting seat belt should not be too close to your neck. You will not be getting the most effective protection. The shoulder portion should be adjusted so that it lies across your chest and midway over your shoulder near the door and not your neck.

To adjust the height of the seat belt anchor, lower or raise the height adjuster into an appropriate position.

To raise the height adjuster, pull it up (1). To lower it, push it down (3) while pressing the height adjuster button (2).

Release the button to lock the anchor into position. Try sliding the height adjuster to make sure that it has locked into position.

⚠ WARNING

- **Verify the shoulder belt anchor is locked into position at the appropriate height. Never position the shoulder belt across your neck or face. Improperly positioned seat belts can cause serious injuries in an accident.**
- **Failure to replace seat belts after an accident could leave you with damaged seat belts that will not provide protection in the event of another collision leading to personal injury or death. Replace your seat belts after being in an accident as soon as possible.**

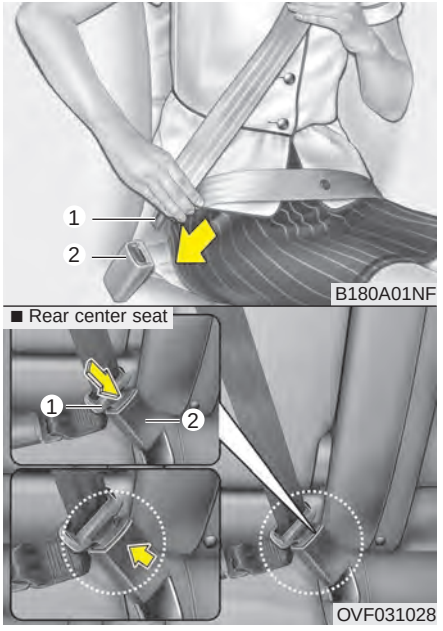

To fasten your seat belt:

To fasten your seat belt, pull it out of the retractor and insert the metal tab (1) into the buckle (2). There will be an audible "click" when the tab locks into the buckle.

The seat belt automatically adjusts to the proper length only after the lap belt portion is adjusted manually so that it fits snugly around your hips. If you lean forward in a slow, easy motion, the belt will extend and let you move around. If there is a sudden stop or impact, however, the belt will lock into position. It will also lock if you try to lean forward too quickly.

⚠ CAUTION

When using the rear center seat belt, the buckle with the "CENTER" mark must be used.

✻ NOTICE

If you are not able to pull out the seat belt from the retractor, firmly pull the belt out and release it. Then you will be able to pull the belt out smoothly.

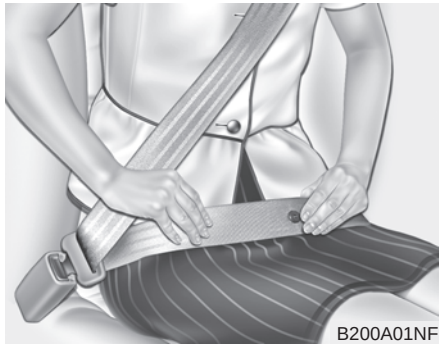

⚠ WARNING

You should place the lap belt portion as low as possible and snugly across your hips, not on your waist. If the lap belt is located too high on your waist, it may increase the chance of injury in the event of a collision. Both arms should not be under or over the belt. Rather, one should be over and the other under, as shown in the illustration.

Never wear the seat belt under the arm near the door.

⚠ WARNING

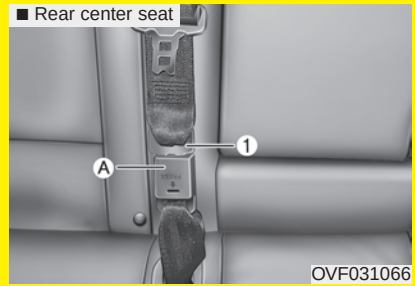

Always have the plate (1) and the buckle (A) locked together. Make sure the belt is not twisted.

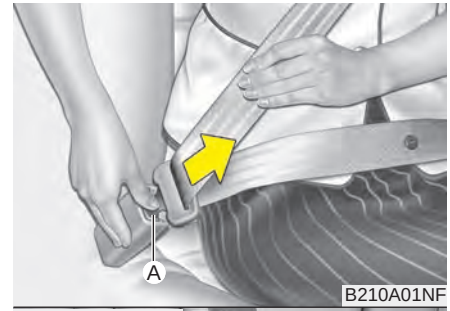

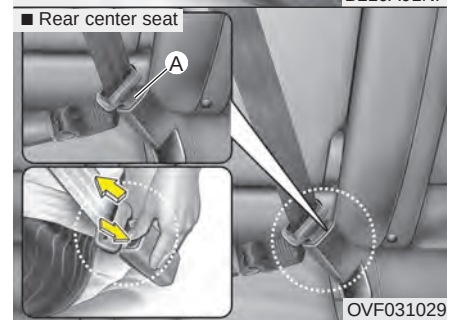

To release the seat belt:

The seat belt is released by pressing the release button (A) in the locking buckle. When it is released, the belt should automatically draw back into the retractor.

If this does not happen, check the belt to be sure it is not twisted, then try again.

Pre-tensioner seat belt

Your vehicle is equipped with driver's and front passenger's pre-tensioner seat belts. The purpose of the pre-tensioner is to make sure that the seat belts fit tightly against the occupant's body in certain frontal collisions. The pre-tensioner seat belts may be activated in crashes where the frontal collision is severe enough.

When the vehicle stops suddenly, or if the occupant tries to lean forward too quickly, the seat belt retractor will lock into position. In certain frontal collisions, the pre-tensioner will activate and pull the seat belt into tighter contact against the occupant's body.

If the system senses excessive seat belt tension on the driver or passenger's seat belt when the pre-tensioner activates, the load limiter inside the pre-tensioner will release some of the pressure on the affected seat belt.

⚠ WARNING

For your safety, be sure that the belt webbing is not loose or twisted and always sit properly on your seat.

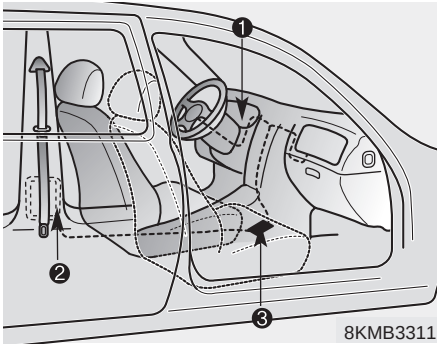

The seat belt pre-tensioner system consists mainly of the following components. Their locations are shown in the illustration:

1. SRS air bag warning light
2. Retractor pre-tensioner assembly
3. SRS control module

⚠ WARNING

To obtain maximum benefit from a pre-tensioner seat belt:

1. **The seat belt must be worn correctly and adjusted to the proper position. Please read and follow all of the important information and precautions about your vehicle's occupant safety features – including seat belts and air bags – that are provided in this manual.**
2. **Be sure you and your passengers always wear seat belts properly.**

✻ NOTICE

- **When the pre-tensioner seat belts are activated, a loud noise may be heard and fine dust, which may appear to be smoke, may be visible in the passenger compartment. These are normal operating conditions and are not hazardous.**
- **Although it is harmless, the fine dust may cause skin irritation and should not be breathed for prolonged periods. Wash all exposed skin areas thoroughly after an accident in which the pre-tensioner seat belts were activated.**
- **Because the sensor that activates the SRS air bag is connected with the pre-tensioner seat belt, the SRS air bag warning light on the instrument panel will illuminate for approximately 6 seconds after the ignition switch has been turned to the ON position, and then it should turn off.**

⚠ CAUTION

If the pre-tensioner seat belt is not working properly, this warning light will illuminate even if there is no malfunction of the SRS air bag. If the SRS air bag warning light does not illuminate when the ignition key is turned to ON, or if it remains illuminated after illuminating for approximately 6 seconds, or if it illuminates while the vehicle is being driven, please have an authorized HYUNDAI dealer inspect the pre-tensioner seat belt or SRS air bag system as soon as possible.

⚠ WARNING

- **Pre-tensioners are designed to operate only one time. After activation, pre-tensioner seat belts must be replaced. All seat belts, of any type, should always be replaced after they have been worn during a collision.**

(Continued)

(Continued)

- **The pre-tensioner seat belt assembly mechanisms become hot during activation. Do not touch the pre-tensioner seat belt assemblies for several minutes after they have been activated.**
- **Do not attempt to inspect or replace the pre-tensioner seat belts yourself. This must be done by an authorized HYUNDAI dealer.**
- **Do not strike the pre-tensioner seat belt assemblies.**
- **Do not attempt to service or repair the pre-tensioner seat belt system in any manner.**
- **Improper handling of the pre-tensioner seat belt assemblies, and failure to heed the warnings not to strike, modify, inspect, replace, service or repair the pre-tensioner seat belt assemblies may lead to improper operation or inadvertent activation and serious injury.**
- **Always wear the seat belts when driving or riding in a motor vehicle.**
- **If the vehicle or pre-tensioner seat belt must be discarded, contact an authorized HYUNDAI dealer.**

Seat belt precautions

⚠ WARNING

All occupants of the vehicle must wear their seat belts at all times. Seat belts and child restraints reduce the risk of serious or fatal injuries for all occupants in the event of a collision or sudden stop. Without a seat belt, occupants could be shifted too close to a deploying air bag, strike the interior structure or be thrown from the vehicle. Properly worn seat belts greatly reduce these hazards.

Always follow the precautions about seat belts, air bags and occupant seat contained in this manual.

Infant or small child

You should be aware of the specific requirements in your country. Child and/or infant seats must be properly placed and installed in the rear seat. For more information about the use of these restraints, refer to “Child restraint system” in this section.

⚠ WARNING

Every person in your vehicle needs to be properly restrained at all times, including infants and children. Never hold a child in your arms or lap when riding in a vehicle. The violent forces created during a crash will tear the child from your arms and throw the child against the interior. Always use a child restraint appropriate for your child's height and weight.

✻ NOTICE

Small children are best protected from injury in an accident when properly restrained in the rear seat by a child restraint system that meets the requirements of the Safety Standards of your country. Before buying any child restraint system, make sure that it has a label certifying that it meets Safety Standards of your country. The restraint must be appropriate for your child's height and weight. Check the label on the child restraint for this information. Refer to "Child restraint system" in this section.

Larger children

Children who are too large for child restraint systems should always occupy the rear seat and use the available lap/shoulder belts. The lap portion should be fastened and snugged on the hips and as low as possible. Check if the belt fits periodically. A child's squirming could put the belt out of position. Children are afforded the most safety in the event of an accident when they are restrained by a proper restraint system in the rear seat. If a larger child (over age 12) must be seated in the front seat, the child should be securely restrained by the available lap/shoulder belt and the seat should be placed in the rearmost position. Children age 12 and under should be restrained securely in the rear seat. NEVER place a child age 12 and under in the front seat. NEVER place a rear facing child seat in the front seat of a vehicle.

If the shoulder belt portion slightly touches the child's neck or face, try placing the child closer to the center of the vehicle. If the shoulder belt still touches their face or neck they need to be returned to a child restraint system.

⚠ WARNING - Shoulder belts on small children

- **Never allow a shoulder belt to be in contact with a child's neck or face while the vehicle is in motion.**
- **If seat belts are not properly worn and adjusted on children, there is a risk of death or serious injury.**

Pregnant women

The use of a seat belt is recommended for pregnant women to lessen the chance of injury in an accident. When a seat belt is used, the lap belt portion should be placed as low and snugly as possible on the hips, not across the abdomen. For specific recommendations, consult a physician.

⚠ WARNING - Pregnant women

Pregnant women must never place the lap portion of the safety belt over the area of the abdomen where the fetus is located or above the abdomen where the belt could crush the fetus during an impact.

Injured person

A seat belt should be used when an injured person is being transported. When this is necessary, you should consult a physician for recommendations.

One person per belt

Two people (including children) should never attempt to use a single seat belt. This could increase the severity of injuries in case of an accident.

Do not lie down

To reduce the chance of injuries in the event of an accident and to achieve maximum effectiveness of the restraint system, all passengers should be sitting up and the front seats should be in an upright position when the car is moving. A seat belt cannot provide proper protection if the person is lying down in the rear seat or if the front seat is in a reclined position.

⚠ WARNING

Riding with a reclined seatback increases your chance of serious or fatal injuries in the event of a collision or sudden stop. The protection of your restraint system (seat belts and air bags) is greatly reduced by reclining your seat. Seat belts must be snug against your hips and chest to work properly. The more the seatback is reclined, the greater the chance that an occupant's hips will slide under the lap belt causing serious internal injuries or the occupant's neck could strike the shoulder belt. Drivers and passengers should always sit well back in their seats, properly belted, and with the seatbacks upright.

Care of seat belts

Seat belt systems should never be disassembled or modified. In addition, care should be taken to assure that seat belts and belt hardware are not damaged by seat hinges, doors or other abuse.

⚠ WARNING

When you return the rear seatback to its upright position after the rear seatback was folded down, be careful not to damage the seat belt webbing or buckle. Be sure that the webbing or buckle does not get caught or pinched in the rear seat. A seat belt with damaged webbing or buckle will not be as strong and could possibly fail during a collision or sudden stop, resulting in serious injury. If the webbing or buckles are damaged, get them replaced immediately.

Periodic inspection

It is recommended that all seat belts be inspected periodically for wear or damage of any kind. Any damaged parts should be replaced as soon as possible.

Keep belts clean and dry

Seat belts should be kept clean and dry. If belts become dirty, they can be cleaned by using a mild soap solution and warm water. Bleach, dye, strong detergents or abrasives should not be used because they may damage and weaken the fabric.

When to replace seat belts

Entire in-use seat belt assembly or assemblies should be replaced if the vehicle has been involved in an accident. This should be done even if no damage is visible. Additional questions concerning seat belt operation should be directed to an authorized HYUNDAI dealer.

CHILD RESTRAINT SYSTEM (IF EQUIPPED)

Children riding in the car should sit in the rear seat and must always be properly restrained to minimize the risk of injury in an accident, sudden stop or sudden maneuver. According to accident statistics, children are safer when properly restrained in the rear seats than in the front seat. Larger children not in a child restraint should use one of the seat belts provided.

You should be aware of the specific requirements in your country. Child and/or infant safety seats must be properly placed and installed in the rear seat. You must use a commercially available child restraint system that meets the requirements of the Safety Standards of your country. Child restraint systems are designed to be secured in vehicle seats by the lap belt portion of a lap/shoulder belt, or by a tether anchor and/or ISOFIX anchors.

Children could be injured or killed in a crash if their restraints are not properly secured. For small children and babies, a child seat or infant seat must be used. Before buying a particular child restraint system, make sure it fits your car seat and seat belts, and fits your child. Follow all the instructions provided by the manufacturer when installing the child restraint system.

⚠ WARNING

- **A child restraint system must be placed in the rear seat. Never install a child or infant seat on the front passenger's seat. Should an accident occur and cause the passenger side air bag to deploy, it could severely injure or kill an infant or child seated in an infant or child seat. Thus only use a child restraint in the rear seat of your vehicle.**
- **A seat belt or child restraint system can become very hot if it is left in a closed vehicle on a sunny day, even if the outside temperature does not feel hot. Be sure to check the seat cover and buckles before placing a child there.**
- **When the child restraint system is not in use, store it in the luggage area or fasten it with a seat belt so that it will not be thrown forward in case of a sudden stop or an accident.**
- **Children may be seriously injured or killed by an inflating air bag. All children, even those too large for child restraints, must ride in the rear seat.**

⚠ WARNING

To reduce the chance or serious or fatal injuries:

- **Children of all ages are safer when restrained in the rear seat. A child riding in the front passenger seat can be forcefully struck by an inflating air bag resulting in serious or fatal injuries.**
- **Always follow the instructions for installation and use of the child restraint maker.**
- **Always make sure the child seat is secured properly in the car and your child is securely restrained in the child seat.**
- **Never hold a child in your arms or lap when riding in a vehicle. The violent forces created during a crash will tear the child from your arms and throw the child against the car's interior.**
- **Never put a seat belt over yourself and a child. During a crash, the belt could press deep into the child causing serious internal injuries.**

(Continued)

(Continued)

- **Never leave children unattended in a vehicle – not even for a short time. The car can heat up very quickly, resulting in serious injuries to children inside. Even very young children may inadvertently cause the vehicle to move, entangle themselves in the windows, or lock themselves or others inside the vehicle.**
- **Never allow two children, or any two persons, to use the same seat belt.**
- **Children often squirm and reposition themselves improperly. Never let a child ride with the shoulder belt under their arm or behind their back. Always properly position and secure children in the rear seat.**
- **Never allow a child to stand-up or kneel on the seat or floorboard of a moving vehicle. During a collision or sudden stop, the child can be violently thrown against the vehicles interior, resulting in serious injury.**

(Continued)

(Continued)

- **Never use an infant carrier or a child safety seat that "hooks" over a seatback, it may not provide adequate security in an accident.**
- **Seat belts can become very hot, especially when the car is parked in direct sunlight. Always check seat belt buckles before fastening them over a child.**
- **After an accident, have an authorized HYUNDAI dealer check the child restraint system, seat belt, tether anchor and lower anchor.**
- **If there is not enough space to place the child restraint system because of the driver's seat, install the child restraint system in the rear right seat.**

Rearward-facing child restraint system

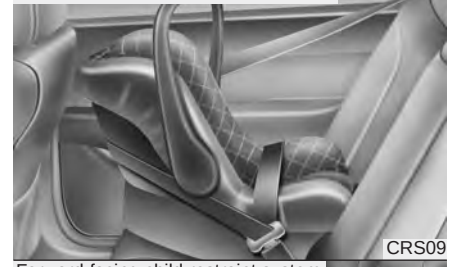

CRS09

Forward-facing child restraint system

OVF031032

Using a child restraint system

For small children and babies, the use of a child seat or infant seat is required. This child seat or infant seat should be of appropriate size for the child and should be installed in accordance with the manufacturer's instructions. For safety reasons, we recommend that the child restraint system be used in the rear seats.

⚠ WARNING

Never place a rear-facing child restraint in the front passenger seat, because of the danger that an inflating passenger-side air bag could impact the rear-facing child restraint and kill the child.

⚠ WARNING - Child seat installation

- **A child can be seriously injured or killed in a collision if the child restraint is not properly anchored to the vehicle and the child is not properly restrained in the child restraint. Before installing the child restraint system, read the instructions supplied by the child restraint system manufacturer.**
- **If the seat belt does not operate as described in this section, have the system checked immediately by your authorized HYUNDAI dealer.**
- **Failure to observe this manual's instructions regarding child restraint system and the instructions provided with the child restraint system could increase the chance and/or severity of injury in an accident.**

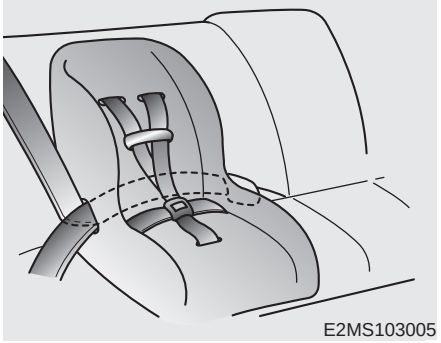

Installing a child restraint system by lap/shoulder belt

To install a child restraint system on the outboard or center rear seats, do the following:

1. Place the child restraint system in the seat and route the lap/shoulder belt around or through the restraint, following the restraint manufacturer's instructions. Be sure the seat belt webbing is not twisted.

⚠ WARNING

When using the rear center seat belt, you should also refer to "3 point rear center seat belt" in this chapter.

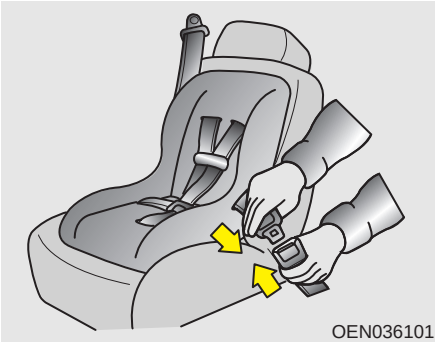

2. Fasten the lap/shoulder belt latch into the buckle. Listen for the distinct “click” sound.

Position the release button so that it is easy to access in case of an emergency.

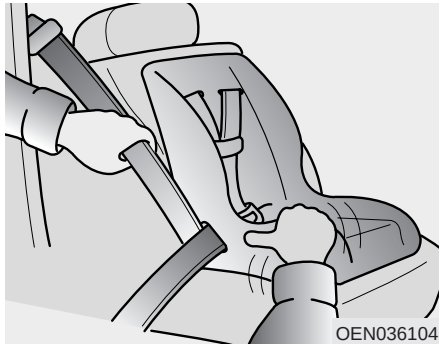

3. Buckle the seat belt and allow the seat belt to take up any slack. After installation of the child restraint system, try to move it in all directions to be sure the child restraint system is securely installed.

If you need to tighten the belt, pull more webbing toward the retractor. When you unbuckle the seat belt and allow it to retract, the retractor will automatically revert back to its normal seated passenger emergency locking usage condition.

Child Seat Restraint Suitability for Seat Position using the Seat Belt - For Europe

Use child safety seats that have been officially approved and are appropriate for your children. When using the child safety seats, refer to the following table.

Age Group	Seating Position		
	Front passenger	Rear outboard	Rear center
0 : Up to 10 kg (0 - 9 months)	U	U	X
0+ : Up to 13 kg (0 - 2 years)	U	U	X
I : 9 kg to 18 kg (9 months - 4 years)	U	U	X
II & III : 15 kg to 36 kg (4 - 12 years)	U	U	X

U : Suitable for "universal" category restraints approved for use in this mass group

⚠ WARNING

We recommend that a child restraint seat be installed in the rear seat, even if the front passenger's air bag ON/OFF switch is set to the OFF position. To ensure the safety of your child, the front passenger's air bag must be deactivated when it should be necessary to install a child restraint seat on the front passenger seat in exceptional circumstances.

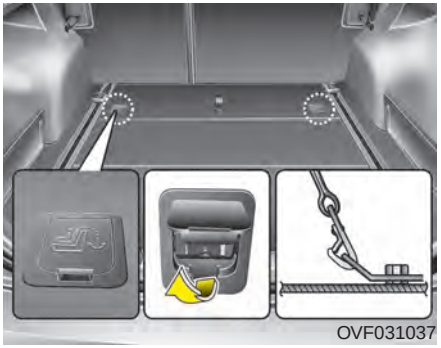

Securing a child restraint seat with "Tether Anchor" system (if equipped)

Child restraint hook holders are located on the floor behind the rear seats.

1. Route the child restraint seat strap over the seatback.
   For vehicles with adjustable headrest, route the tether strap under the headrest and between the headrest posts, otherwise route the tether strap over the top of the seatback.
2. Connect the tether strap hook to the appropriate child restraint hook holder and tighten to secure the seat.

⚠ WARNING

A child can be seriously injured or killed in a collision if the child restraint is not properly anchored to the car and the child is not properly restrained in the child restraint. Always follow the child seat manufacturer's instructions for installation and use.

⚠ WARNING - Tether strap

Never mount more than one child restraint to a single tether or to a single lower anchorage point. The increased load caused by multiple seats may cause the tethers or anchorage points to break, causing serious injury or death.

⚠ WARNING - Child restraint check

Check that the child restraint system is secure by pushing and pulling it in different directions. Incorrectly fitted child restraints may swing, twist, tip or separate causing death or serious injury.

⚠ WARNING - Child restraint anchorage

- **Child restraint anchorages are designed to withstand only those loads imposed by correctly fitted child restraints. Under no circumstances are they to be used for adult seat belts or harnesses or for attaching other items or equipment to the vehicle.**
- **The tether strap may not work properly if attached somewhere other than the correct tether anchor.**

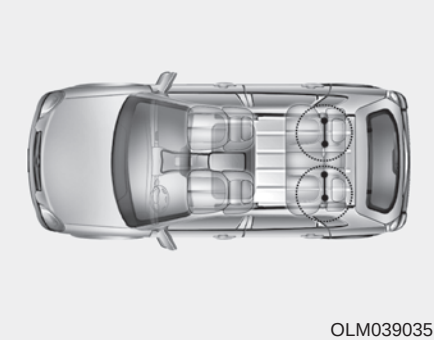

OLM039035

Securing a child restraint system with "ISOFIX" system and "Tether Anchorage" system (if equipped)

ISOFIX is a standardised method of fitting child seats that eliminates the need to use the standard adult seat belt to secure the seat in the vehicle. This enables a much more secure and positive location with the added benefit of easier and quicker installation.

An ISOFIX-seat may only be installed if it has vehicle-specific or universal approval in accordance with the requirements of ECE-R 44.

❊ ISOFIX: International Standards Origanisation FIX

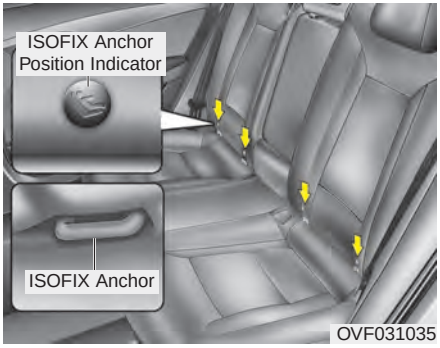

OVF031035

There are ISOFIX symbols located on the lower portion of each side of the rear seatbacks. These symbols indicate the position of the lower anchors for child restraints so equipped.

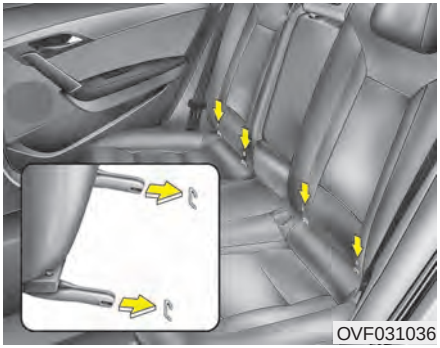

OVF031036

Both rear outboard seats are equipped with a pair of ISOFIX anchorages as well as a corresponding top tether anchorage on the floor behind the rear seats. The ISOFIX anchorages are located between seat cushion and backrest, marked with the ISOFIX icon.

For installation, CRS ISOFIX connecters have to engage with the vehicles ISOFIX anchorages (listen for a CLICK, check potential visual indicators on the CRS and cross-check by pulling).

CRS with universal approval to ECE-R 44 need to be fixed additionally with a top tether strap connected to the corresponding top tether anchorage point on the floor behind the rear seats.

The installing and the use of a child-seat has to be done according to the installing-manual, which is added to the ISOFIX-seat.

⚠ WARNING

- **When using the vehicle's "ISOFIX" system to install a child restraint system in the rear seat, all unused vehicle rear seat belt metal latch plates or tabs must be latched securely in their seat belt buckles and the seat belt webbing must be retracted behind the child restraint to prevent the child from reaching and taking hold of unretracted seat belts. Unlatched metal latch plates or tabs may allow the child to reach the unretracted seat belts which may result in strangulation and a serious injury or death to the child in the child restraint.**
- **Do not place anything around the ISOFIX anchors. Also make sure that the seat belt is not caught in the ISOFIX anchors.**

To secure the child restraint seat

1. To engage the child restraint seat to the ISOFIX anchor, insert the child restraint seat latch into the ISOFIX anchor. Listen for the audible “click” sound.

⚠ CAUTION

Do not allow the rear seat belt webbing to get scratched or pinched by the ISOFIX-seat latch and ISOFIX anchor during installation.

2. Connect the tether strap hook to the child restraint hook holder and tighten to secure the seat. (Refer to the previous page.)

⚠ WARNING

- **Do not install a child restraint seat at the center of the rear seat using the vehicle's ISOFIX anchors. The ISOFIX anchors are only provided for the left and right outboard rear seating positions. Do not misuse the ISOFIX anchors by attempting to attach a child restraint seat in the middle of the rear seat to the ISOFIX anchors.**

  In a crash, the child restraint seat ISOFIX attachments may not be strong enough to secure the child restraint seat properly in the center of the rear seat and may break, causing serious injury or death.
- **Do not mount more than one child restraint to a child restraint lower anchorage point. The improper increased load may cause the anchorage points or tether anchor to break, causing serious injury or death.**

(Continued)

(Continued)

- **Attach the ISOFIX or ISOFIX-compatible child restraint seat only to the appropriate locations shown in the illustration.**
- **Always follow the installation and use instructions provided by the manufacturer of the child restraint.**

Child seat restraint suitability for vehicle ISOFIX positions - For Europe

Mass Group	Size Class	Fixture	Vehicle ISOFIX positions			
			Front Passenger	Rear Outboard (Driver side)	Rear Outboard (Passenger side)	Rear Center
Carrycot	F	ISO/L1	-	X	X	-
	G	ISO/L2	-	X	X	-
0 : UP to 10kg	E	ISO/R1	-	IL	IL	-
0+ : UP to 13kg	E	ISO/R1	-	IL	IL	-
	D	ISO/R2	-	IL	IL	-
	C	ISO/R3	-	IL	IL	-
I : 9 to 18kg	D	ISO/R2	-	IL	IL	-
	C	ISO/R3	-	IL	IL	-
	B	ISO/F2	-	IUF	IUF	-
	B1	ISO/F2X	-	IUF	IUF	-
	A	ISO/F3	-	IUF	IUF	-

IUF = Suitable for ISOFIX forward child restraints systems of universal category approved for use in the mass group.

IL = Suitable for particular ISOFIX child restraints systems (CRS) approved for this vehicle type according to ECE44. These ISOFIX CRS are those of the "specific vehicle", "restricted" or "semi-universal" categories.

X = ISOFIX position not suitable for ISOFIX child restraint system in this mass group and/or this size class.

* Both ISO/R2 and ISO/R3 are able to be set up only at the foremost position of the passenger seat.

* ISOFIX child restraint system size classes and fixtures

A - ISO/F3: Full-Height Forward-Facing toddler CRS (height 720mm)

B - ISO/F2: Reduced-Height Forward-Facing toddler CRS (height 650mm)

B1 - ISO/F2X: Reduced-Height Second Version Back Surface Shape Forward-Facing toddler CRS (height 650mm)

C - ISO/R3: Full-Size Rearward-Facing toddler CRS

D - ISO/R2: Reduced-Size Rearward-Facing toddler CRS

E - ISO/R1: Infant-Size Rearward-Facing CRS

F - ISO/L1: Left Lateral Facing position CRS (carry-cot)

G - ISO/L2: Right Lateral Facing position CRS (carry-cot)

Recommended child restraint systems – For Europe

Mass Group	Name	Manufacturer	Type of Fixation	ECE-R44 Approval No.
Group 0-1 (0-18kg)	BIMBO G0/1 S	FAIR	Rearward facing with vehicle specific ISOFIX platform type “G”	E4 03443416 (Seat) E4 04443718 (Platform)
	Baby Safe Plus II	Britax Römer	Rearward facing with ISOFIX adapter	E1 04301146
Group 1 (9-18kg)	Duo Plus	Britax Römer	Forward facing with vehicle ISOFIX lower anchorage + Top Tether	E1 04301133

CRS Manufacturer information

FAIR http://www.fairbimbofix.com
Britax Römer http://www.britax.com

AIR BAG - SUPPLEMENTAL RESTRAINT SYSTEM (IF EQUIPPED)

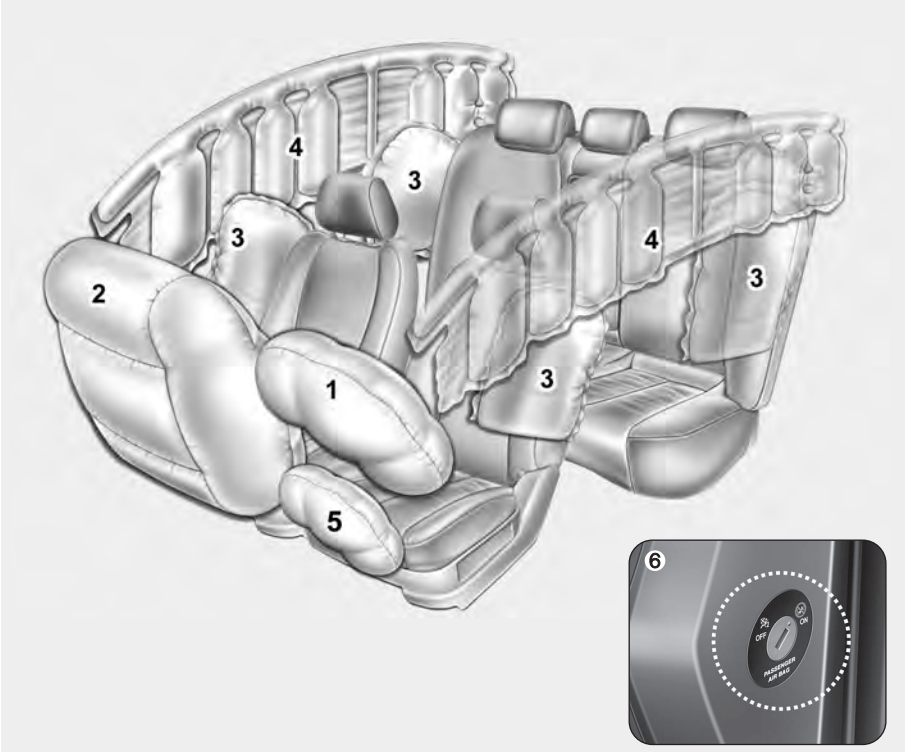

* The actual air bags in the vehicle may differ from the illustration.

OVF031069/OYN039026

(1) Driver's front air bag
(2) Passenger's front air bag*
(3) Side impact air bag*
(4) Curtain air bag*
(5) Driver's knee air bag*
(6) Passenger's front air bag ON/OFF switch*

* : if equipped

⚠ WARNING

Even in vehicles with air bags, you and your passengers must always wear the safety belts provided in order to minimize the risk and severity of injury in the event of a collision or rollover.

How does the air bag system operate

- Air bags are activated (able to inflate if necessary) only when the ignition switch is turned to the ON or START position.
- Air bags inflate instantly in the event of serious frontal or side collision (if equipped with side impact air bag or curtain air bag) in order to help protect the occupants from serious physical injury.
- There is no single speed at which the air bags will inflate.

  Generally, air bags are designed to inflate based upon the severity of a collision and its direction. These two factors determine whether the sensors produce an electronic deployment/ inflation signal.
- Air bag deployment depends on a number of factors including vehicle speed, angles of impact and the density and stiffness of the vehicles or objects which your vehicle hits in the collision. The determining, factors are not limited to those mentioned above.
- The front air bags will completely inflate and deflate in an instant.

  It is virtually impossible for you to see the air bags inflate during an accident. It is much more likely that you will simply see the deflated air bags hanging out of their storage compartments after the collision.
- In order to help provide protection in a severe collision, the air bags must inflate rapidly. The speed of air bag inflation is a consequence of extremely short time in which a collision occurs and the need to get the air bag between the occupant and the vehicle structures before the occupant impacts those structures. This speed of inflation reduces the risk of serious or life-threatening injuries in a severe collision and is thus a necessary part of air bag design.

  However, air bag inflation can also cause injuries which can include facial abrasions, bruises and broken bones because the inflation speed also causes the air bags to expand with a great deal of force.
- **There are even circumstances under which contact with the steering wheel air bag can cause fatal injuries, especially if the occupant is positioned excessively close to the steering wheel.**

⚠ WARNING

- **To avoid severe personal injury or death caused by deploying air bags in a collision, the driver should sit as far back from the steering wheel air bag as possible (at least 250 mm (10 inches) away). The front passenger should always move their seat as far back as possible and sit back in their seat.**
- **Air bag inflates instantly in an event of a collision, passengers may be injured by the air bag expansion force if they are not in a proper position.**
- **Air bag inflation may cause injuries including facial or bodily abrasions, injuries from broken glasses or burns.**

Noise and smoke

When the air bags inflate, they make a loud noise and they leave smoke and powder in the air inside of the vehicle. This is normal and is a result of the ignition of the air bag inflator. After the air bag inflates, you may feel substantial discomfort in breathing due to the contact of your chest with both the seat belt and the air bag, as well as from breathing the smoke and powder. **Open your doors and/or windows as soon as possible after impact in order to reduce discomfort and prevent prolonged exposure to the smoke and powder.**

Though smoke and powder are non-toxic, it may cause irritation to the skin (eyes, nose and throat, etc.). If this is the case, wash and rinse with cold water immediately and consult the doctor if the symptom persists.

⚠ WARNING

When the air bags deploy, the air bag related parts in the steering wheel and/or instrument panel and/or in both sides of the roof rails above the front and rear doors are very hot. To prevent injury, do not touch the air bag storage areas internal components immediately after an air bag has inflated.

1JBH3051

Installing a child restraint on a front passenger's seat is forbidden when the air bag is active

Never place a rear-facing child restraint in the front passenger's seat. If the air bag deploys, it would impact the rear-facing child restraint, causing serious or fatal injury.

In addition, do not place front-facing child restraints in the front passenger's seat either. If the front passenger air bag inflates, it would cause serious or fatal injuries to the child.

If your vehicle is equipped with the passenger's front air bag ON/OFF switch, you can activate or deactivate the front passenger's air bag when necessary.

For more details, please refer to 3-44 page.

⚠ WARNING

- **Extreme Hazard! Do not use a rearward facing child restraint on a seat protected by an air bag in front of it!**
- **Never put a child restraint in the front passenger's seat. If the front passenger air bag inflates, it would cause serious or fatal injuries.**
- **When children are seated in the rear outboard seats of vehicle equipped with side and/or curtain air bags, be sure to install the child restraint system as far away from the door side as possible, and securely lock the child restraint system in position.**

  Inflation of side and/or curtain air bags could cause serious injury or death to an infant or child.

Air bag warning and indicator

Air bag warning light

The purpose of the air bag warning light in your instrument panel is to alert you of a potential problem with your air bag - Supplemental Restraint System (SRS).

When the ignition switch is turned ON, the warning light should illuminate for approximately 6 seconds, then go off.

Have the system checked if:

- The light does not turn on briefly when you turn the ignition ON.
- The light stays on after illuminating for approximately 6 seconds.
- The light comes on while the vehicle is in motion.
- The light blinks when the ignition switch is in ON position.

■ Type A

OVF031038

■ Type B

OVF031039

Passenger's front air bag ON indicator (if equipped)

The passenger's front air bag ON indicator illuminates for approximately 4 seconds after the ignition switch is turned to the ON position.

The passenger's front air bag ON indicator also comes on when the passenger's front air bag ON/OFF switch is set to the ON position and goes off after approximately 60 seconds.

■ Type A

OVF031040

■ Type B

OVF031041

Passenger's front air bag OFF indicator (if equipped)

The passenger's front air bag OFF indicator illuminates for about 4 seconds after the ignition switch is turned to the ON position.

The passenger's front air bag OFF indicator also comes on when the passenger's front air bag ON/OFF switch is set to the OFF position and goes off when the passenger's front air bag ON/OFF switch is set to the ON position.

⚠ CAUTION

If the passenger's front air bag ON/OFF switch malfunctions, the passenger's front air bag OFF indicator will not illuminate (The passenger's front air bag ON indicator comes on and goes off after approximately 60 seconds) and the passenger's front air bag will inflate in a frontal impact even if the passenger's front air bag ON/OFF switch is set to the OFF position.

If this occurs, have an authorized HYUNDAI dealer inspect the passenger's front air bag ON/OFF switch and the SRS air bag system as soon as possible.

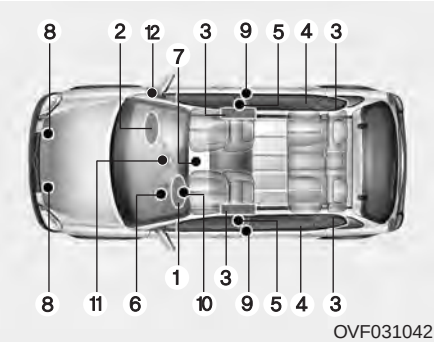

OVF031042

SRS components and functions

The SRS consists of the following components:

1. Driver's front air bag module
2. Passenger's front air bag module*
3. Side air bag modules*
4. Curtain air bag modules*
5. Retractor pre-tensioner assemblies
6. Air bag warning light
7. SRS control module (SRSCM)
8. Front impact sensors*
9. Side impact sensors*
10. Driver's knee air bag module*
11. Passenger's front air bag ON/OFF indicator*
12. Passenger's front air bag ON/OFF switch*

* : if equipped

The SRSCM continually monitors all elements while the ignition switch is ON to determine if a frontal, near-frontal impact or side impact is severe enough to require air bag deployment or pre-tensioner seat belt deployment.

The SRS air bag warning light on the instrument panel will illuminate for about 6 seconds after the ignition switch is turned to the ON position, after which the air bag warning light should go out.

⚠ WARNING

If any of the following conditions occurs, this indicates a malfunction of the SRS. Have an authorized HYUNDAI dealer inspect the air bag system as soon as possible.

- **The light does not turn on briefly when you turn the ignition ON.**
- **The light stays on after illuminating for approximately 6 seconds.**
- **The light comes on while the vehicle is in motion.**
- **The light blinks when the ignition switch is in ON position.**

Driver’s front air bag (1)

The front air bag modules are located both in the center of the steering wheel, in the front passenger's panel above the glove box and/or in the driver’s side knee bolster. When the SRSCM detects a sufficiently severe impact to the front of the vehicle, it will automatically deploy the front air bags.

Driver’s front air bag (2)

Upon deployment, tear seams molded directly into the pad covers will separate under pressure from the expansion of the air bags. Further opening of the covers then allows full inflation of the air bags.

Driver’s front air bag (3)

A fully inflated air bag, in combination with a properly worn seat belt, slows the driver's or the passenger's forward motion, reducing the risk of head and chest injury.

After complete inflation, the air bag immediately starts deflating, enabling the driver to maintain forward visibility and the ability to steer or operate other controls.

Passenger's front air bag

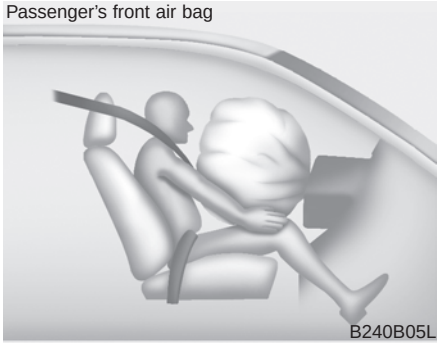

⚠ WARNING

- **Do not install or place any accessories (drink holder, cassette holder, sticker, etc.) on the front passenger's panel above the glove box in a vehicle with a passenger's air bag. Such objects may become dangerous projectiles and cause injury if the passenger's air bag inflates.**
- **When installing a container of liquid air freshener inside the vehicle, do not place it near the instrument cluster nor on the instrument panel surface.**

  It may become dangerous projectiles and cause injury if the passenger's air bag inflates.

⚠ WARNING

- **If an air bag deploys, there may be a loud noise followed by a fine dust released in the vehicle. These conditions are normal and are not hazardous - the air bags are packed in this fine powder. The dust generated during air bag deployment may cause skin or eye irritation as well as aggravate asthma for some persons. Always wash all exposed skin areas thoroughly with lukewarm water and a mild soap after an accident in which the air bags were deployed.**

(Continued)

(Continued)

- **The SRS can function only when the ignition key is in the ON position. If the SRS air bag warning light does not illuminate, or continuously remains on after illuminating for about 6 seconds when the ignition key is turned to the ON position, or after the engine is started, comes on while driving, the SRS is not working properly. If this occurs, have your vehicle immediately inspected by an authorized HYUNDAI dealer.**
- **Before you replace a fuse or disconnect a battery terminal, turn the ignition switch to the LOCK position and remove the ignition key. Never remove or replace the air bag related fuse(s) when the ignition switch is in the ON position. Failure to heed this warning will cause the SRS air bag warning light to illuminate.**

■ Driver's front air bag

OVF031049

■ Driver's knee air bag

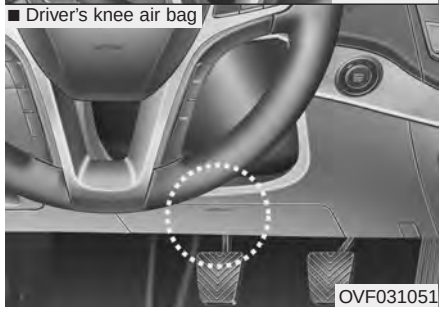

OVF031051

Driver's and passenger's front air bag (if equipped)

Your vehicle is equipped with a Supplemental Restraint (Air Bag) System and lap/shoulder belts at both the driver and passenger seating positions.

The indications of the system's presence are the letters "AIR BAG" embossed on the air bag pad cover in the steering wheel and/or on the cover of the driver's side knee bolster located below the steering wheel and the passenger's side front panel pad above the glove box.

The SRS consists of air bags installed under the pad covers in the center of the steering wheel, in the knee bolster below the steering wheel column and the passenger's side front panel above the glove box.

■ Passenger's front air bag

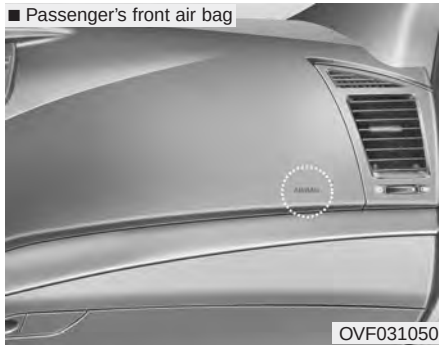

OVF031050

The purpose of the SRS is to provide the vehicle's driver and/or the front passenger with additional protection than that offered by the seat belt system alone in case of a frontal impact of sufficient severity.

⚠ WARNING

Always use seat belts and child restraints – every trip, every time, everyone! Air bags inflate with considerable force and in the blink of an eye. Seat belts help keep occupants in proper position to obtain maximum benefit from the air bag. Even with air bags, improperly and unbelted occupants can be severely injured when the air bag inflates. Always follow the precautions about seat belts, air bags and occupant safety contained in this manual.

To reduce the chance of serious or fatal injuries and receive the maximum safety benefit from your restraint system:

- **Never place a child in any child or booster seat in the front seat.**
- **ABC – Always Buckle Children in the back seat. It is the safest place for children of any age to ride.**
- **Front and side impact air bags can injure occupants improperly positioned in the front seats.**

(Continued)

(Continued)

- **Move your seat as far back as practical from the front air bags, while still maintaining control of the vehicle.**
- **You and your passengers should never sit or lean unnecessarily close to the air bags. Improperly positioned drivers and passengers can be severely injured by inflating air bags.**
- **Never lean against the door or center console – always sit in an upright position.**
- **No objects should be placed over or near the air bag modules on the steering wheel, instrument panel, and the front passenger's panel above the glove box, because any such object could cause harm if the vehicle is in a crash severe enough to cause the air bags to deploy.**

(Continued)

(Continued)

- **Do not tamper with or disconnect SRS wiring or other components of the SRS system. Doing so could result in injury, due to accidental deployment of the air bags or by rendering the SRS inoperative.**
- **If the SRS air bag warning light remains illuminated while the vehicle is being driven, have an authorized HYUNDAI dealer inspect the air bag system as soon as possible.**
- **Air bags can only be used once – have an authorized HYUNDAI dealer replace the air bag immediately after deployment.**
- **The SRS is designed to deploy the front air bags only when an impact is sufficiently severe and when the impact angle is less than 30° from the forward longitudinal axis of the vehicle. Additionally, the air bags will only deploy once. Seat belts must be worn at all times.**

(Continued)

(Continued)

- **Front air bags are not intended to deploy in side-impact, rear-impact or rollover crashes. In addition, front air bags will not deploy in frontal crashes below the deployment threshold.**
- **A child restraint system must never be placed in the front seat. The infant or child could be severely injured or killed by an air bag deployment in case of an accident.**
- **Children age 12 and under must always be properly restrained in the rear seat. Never allow children to ride in the front passenger seat. If a child over 12 must be seated in the front seat, he or she must be properly belted and the seat should be moved as far back as possible.**

(Continued)

(Continued)

- **For maximum safety protection in all types of crashes, all occupants including the driver should always wear their seat belts whether or not an air bag is also provided at their seating position to minimize the risk of severe injury or death in the event of a crash. Do not sit or lean unnecessarily close to the air bag while the vehicle is in motion.**
- **Sitting improperly or out of position can result in serious or fatal injury in a crash. All occupants should sit upright with the seat back in an upright position, centered on the seat cushion with their seat belt on, legs comfortably extended and their feet on the floor until the vehicle is parked and the ignition key is removed.**
- **The SRS air bag system must deploy very rapidly to provide protection in a crash. If an occupant is out of position because of not wearing a seat belt, the air bag may forcefully contact the occupant causing serious or fatal injuries.**

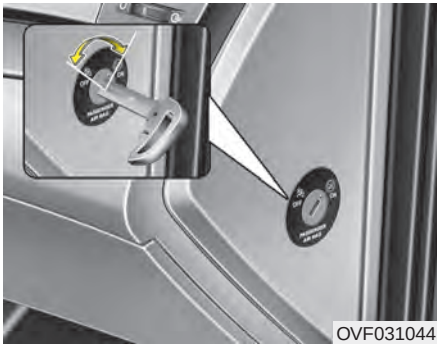

Passenger's front air bag ON/OFF switch (if equipped)

The passenger's front air bag can be deactivated by the passenger's front air bag ON/OFF switch if a child restraint is installed on the front passenger's seat or if the front passenger's seat is unoccupied by a person.

To ensure the safety of your child, the passenger's front air bag must be deactivated when it should be necessary to install a rearward facing child seat on the front passenger seat in exceptional circumstances.

■ Type A

OVF031045

■ Type B

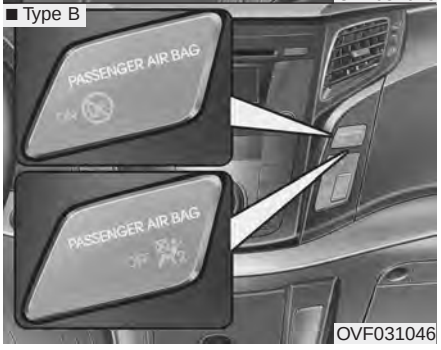

OVF031046

To deactivate or reactivate the passenger's front air bag:

To deactivate the passenger's front air bag, insert the master key into the passenger's front air bag ON/OFF switch and turn it to the OFF position.

The passenger's front air bag OFF indicator ( ) will illuminate and stay on until the passenger's front air bag is reactivated.

To reactivate the passenger's front air bag, insert the master key into the passenger's front air bag ON/OFF switch and turn it to the ON position. The passenger's front air bag OFF indicator will go out and the passenger's front air bag ON indicator ( ) will illuminate for approximately 60 seconds.

⚠ WARNING

On some models, the front air bag ON/OFF switch could turn by using a similar small rigid device. Always check the status of the front air bag ON/OFF switch and passenger's front air bag ON/OFF indicator.

✻ NOTICE

- **When the passenger's front air bag ON/OFF switch is set to the ON position, the passenger's front air bag is activated and child or infant seat should not be installed on the front passenger seat.**
- **When the passenger's front air bag ON/OFF switch is set to the OFF position, the passenger's front air bag is deactivated.**

⚠ CAUTION

- ***If the passenger's front air bag ON/OFF switch is not working properly, the air bag warning light ( )on the instrument panel will illuminate.***

  And, the passenger's front air bag OFF indicator ( ) will not illuminate (The passenger's front air bag ON indicator comes on and goes off after approximately 60 seconds), the SRS Control Module reactivates the passenger's front air bag and the passenger's front air bag will inflate in frontal impact crashes even if the passenger's front air bag ON/OFF switch is set to the OFF position.

(Continued)

(Continued)

If this occurs, have an authorized HYUNDAI dealer inspect the passenger's front air bag ON/OFF switch, the pre-tensioner seat belt system and the SRS air bag system as soon as possible.

- *If the SRS air bag warning light blinks or does not illuminate when the ignition switch is turned to the ON position, or if it illuminates while the vehicle is being driven, have an authorized HYUNDAI dealer inspect the passenger's front air bag ON/OFF switch, pre-tensioner seat belt and the SRS air bag system as soon as possible.*

⚠ WARNING

- **The driver is responsible for the proper position of the passenger's front air bag ON/OFF switch.**
- **Deactivate the passenger's front air bag only when the ignition switch is switched off, or the malfunction may occur in the SRS Control Module.**
  And there may be a danger that the driver's and/or front passenger's and/or side and curtain air bag may fail to trigger, or not trigger correctly during a collision.
- **Never install a rearward facing child seat on the front passenger's seat unless the passenger's front air bag has been deactivated. The infant or child could be severely injured or killed by an air bag deployment in case of an accident.**

(Continued)

(Continued)

- **Even though your vehicle is equipped with the passenger's front air bag ON/OFF switch, do not install a child restraint system in the front passenger's seat. A child restraint system must never be placed in the front seat. Children who are too large for child restraint systems should always occupy the rear seat and use the available lap/shoulder belts. Children are afforded the most safety in the event of an accident when they are restrained by a proper restraint system in the rear seat.**
- **As soon as the child seat is no longer needed on the front passenger's seat, reactivate the front passenger's air bag.**

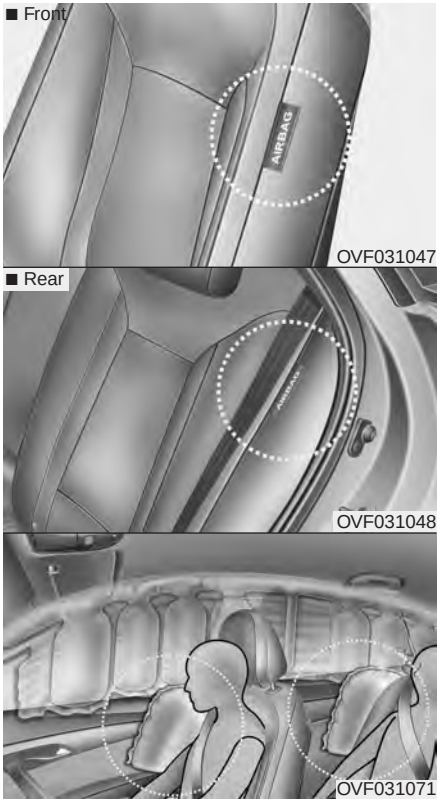

Side impact air bag (if equipped)

Your vehicle is equipped with a side impact air bag in each front and outboard rear seat. The purpose of the air bag is to provide the vehicle's driver and/or the front passenger with additional protection than that offered by the seat belt alone.

The side impact air bags are designed to deploy only during certain side-impact collisions, depending on the crash severity, angle, speed and point of impact. The side air bags are not designed to deploy in all side impact situations.

⚠ WARNING

Do not allow the passengers to lean their heads or bodies onto doors, put their arms on the doors, stretch their arms out of the window, or place objects between the doors and passengers when they are seated on seats equipped with side and/or curtain air bags.

⚠ WARNING

- **The side impact air bag is supplemental to the driver's and the passenger's seat belt systems and is not a substitute for them. Therefore your seat belts must be worn at all times while the vehicle is in motion. The air bags deploy only in certain side impact conditions severe enough to cause significant injury to the vehicle occupants.**
- **For best protection from the side impact air bag system and to avoid being injured by the deploying side impact air bag, both front seat occupants should sit in an upright position with the seat belt properly fastened. The driver's hands should be placed on the steering wheel at the 9:00 and 3:00 positions. The passenger's arms and hands should be placed on their laps.**
- **Do not use any accessory seat covers.**

(Continued)

(Continued)

- **Use of seat covers could reduce or prevent the effectiveness of the system.**
- **Do not install any accessories on the side or near the side impact air bag.**
- **Do not place any objects over the air bag or between the air bag and yourself.**
- **Do not place any objects (an umbrella, bag, etc.) between the front door and the front seat. Such objects may become dangerous projectiles and cause injury if the supplemental side impact air bag inflates.**
- **To prevent unexpected deployment of the side impact air bag that may result in personal injury, avoid impact to the side impact sensor when the ignition key is on.**
- **If the seat or seat cover is damaged, have the vehicle checked and repaired by an authorized HYUNDAI dealer. Inform that your vehicle is equipped with side impact air bags.**

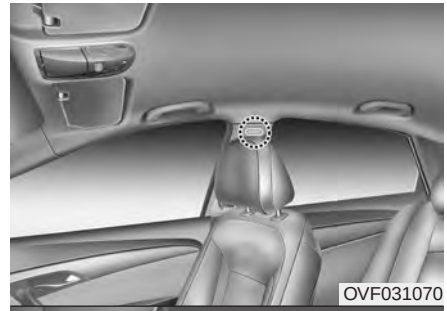

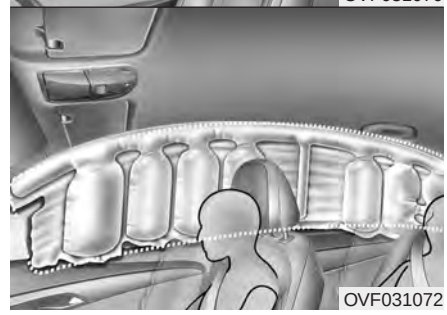

Curtain air bag (if equipped)

Curtain air bags are located along both sides of the roof rails above the front and rear doors.
They are designed to help protect the heads of the front seat occupants and the rear outboard seat occupants in certain side impact collisions.

The curtain air bags are designed to deploy during certain side impact collisions, depending on the crash severity, angle, speed and point of impact. The curtain air bags are not designed to deploy in all side impact situations, collisions from the front or rear of the vehicle or in most rollover situations.

⚠ WARNING

- **In order for side impact and curtain air bags to provide the best protection, both front seat occupants and both outboard rear occupants should sit in an upright position with the seat belts properly fastened. Importantly, children should sit in a proper child restraint system in the rear seat.**
- **When children are seated in the rear outboard seats, they must be seated in the proper child restraint system.**

  Make sure to put the child restraint system as far away from the door side as possible, and secure the child restraint system in a locked position.

(Continued)

(Continued)

- **Do not allow the passengers to lean their heads or bodies onto doors, put their arms on the doors, stretch their arms out of the window, or place objects between the doors and passengers when they are seated on seats equipped with side and/or curtain air bags.**
- **Never try to open or repair any components of the side curtain air bag system. This should only be done by an authorized HYUNDAI dealer.**

Failure to follow the above mentioned instructions can result in injury or death to the vehicle occupants in an accident.

Why didn't my air bag go off in a collision? (Inflation and non-inflation conditions of the air bag)

There are many types of accidents in which the air bag would not be expected to provide additional protection.

These include rear impacts, second or third collisions in multiple impact accidents, as well as low speed impacts. In other words, just because your vehicle is damaged and even if it is totally unusable, don't be surprised that the air bags did not inflate.

OVF031056/OVF031057/OVF031058/OVF032059/OVF031060

Air bag collision sensors

(1) SRS control module
(2) Front impact sensor
(3) Side impact sensor (front)*
(4) Side impact sensor (rear)*

* : if equipped

⚠ WARNING

- **Do not hit or allow any objects to impact the locations where air bag or sensors are installed.**

  This may cause unexpected air bag deployment, which could result in serious personal injury or death.
- **If the installation location or angle of the sensors is altered in any way, the air bags may deploy when they should not or they may not deploy when they should, causing severe injury or death.**

  Therefore, do not try to perform maintenance on or around the air bag sensors. Have the vehicle checked and repaired by an authorized HYUNDAI dealer.

(Continued)

(Continued)

- **Problems may arise if the sensor installation angles are changed due to the deformation of the front bumper, body or B pillar and C pillars where side collision sensors are installed. Have the vehicle checked and repaired by an authorized HYUNDAI dealer.**
- **Your vehicle has been designed to absorb impact and deploy the air bag(s) in certain collisions. Installing bumper guards or replacing a bumper with non-genuine parts may adversely affect your vehicles collision and air bag deployment performance.**

Air bag inflation conditions

Front air bags

Front air bags are designed to inflate in a frontal collision depending on the intensity, speed or angles of impact of the front collision.

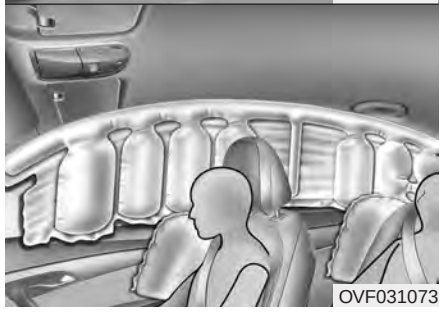

Side impact and curtain air bags (if equipped)

Side impact and/or curtain air bags are designed to inflate when an impact is detected by side collision sensors depending on the strength, speed or angles of impact resulting from a side impact collision.

Although the front air bags (driver's and front passenger's air bags) are designed to inflate only in frontal collisions, they also may inflate in other types of collisions if the front impact sensors detect a sufficient impact. Side air bags (side impact and/or curtain air bags) are designed to inflate only in side impact collisions, but they may inflate in other collisions if the side impact sensors detect a sufficient impact.

If the vehicle chassis is impacted by bumps or objects on unimproved roads or sidewalks, air bags may deploy. Drive carefully on unimproved roads or on surfaces not designed for vehicle traffic to prevent unintended air bag deployment.

Air bag non-inflation conditions

- In certain low-speed collisions the air bags may not deploy. The air bags are designed not to deploy in such cases because they may not provide benefits beyond the protection of the seat belts in such collisions.

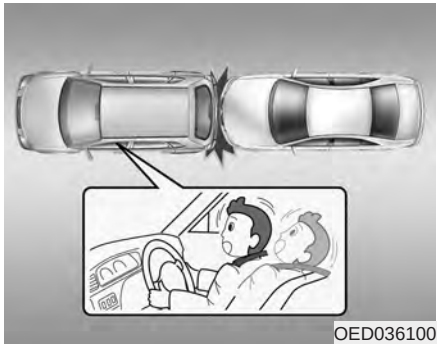
OED036100

- Air bags are not designed to inflate in rear collisions, because occupants are moved backward by the force of the impact. In this case, inflated air bags would not be able to provide any additional benefit.

OVF031061

- Front air bags may not inflate in side impact collisions, because occupants move to the direction of the collision, and thus in side impacts, frontal air bag deployment would not provide additional occupant protection.
- However, if equipped with side impact and curtain air bags, the air bags may inflate depending on the intensity, vehicle speed and angles of impact.

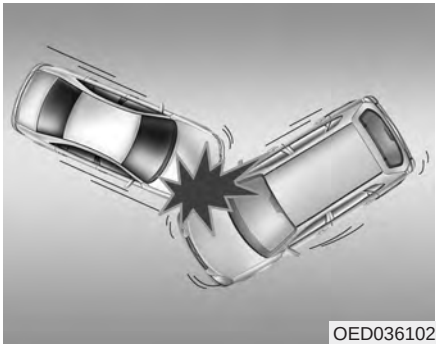
OED036102

- In an angled collision, the force of impact may direct the occupants in a direction where the air bags would not be able to provide any additional benefit, and thus the sensors may not deploy any air bags.

OED036103

- Just before impact, drivers often brake heavily. Such heavy braking lowers the front portion of the vehicle causing it to “ride” under a vehicle with a higher ground clearance. Air bags may not inflate in this "under-ride" situation because deceleration forces that are detected by sensors may be significantly replaced by such “under-ride” collisions.

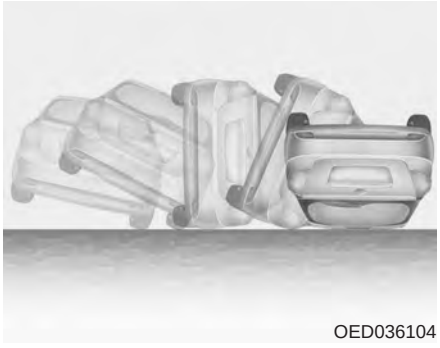
OED036104

- Air bags may not inflate in rollover accidents because air bag deployment would not provide protection to the occupants.

  However, side and/or curtain air bags may inflate when the vehicle is rolled over by a side impact collision, if the vehicle is equipped with side impact air bags and curtain air bags.

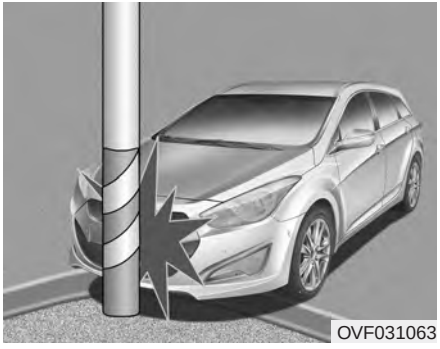
OVF031063

- Air bags may not inflate if the vehicle collides with objects such as utility poles or trees, where the point of impact is concentrated to one area and the full force of the impact is not delivered to the sensors.

SRS Care

The SRS is virtually maintenance-free and so there are no parts you can safely service by yourself. If the SRS air bag warning light does not illuminate, or continuously remains on, have your vehicle immediately inspected by an authorized HYUNDAI dealer.

Any work on the SRS system, such as removing, installing, repairing, or any work on the steering wheel must be performed by an authorized HYUNDAI dealer. Improper handling of the SRS system may result in serious personal injury.

⚠ WARNING

- **Modification to SRS components or wiring, including the addition of any kind of badges to the pad covers or modifications to the body structure, can adversely affect SRS performance and lead to possible injury.**
- **For cleaning the air bag pad covers, use only a soft, dry cloth or one which has been moistened with plain water. Solvents or cleaners could adversely affect the air bag covers and proper deployment of the system.**
- **No objects should be placed over or near the air bag modules on the steering wheel, instrument panel, and the front passenger's panel above the glove box, because any such object could cause harm if the vehicle is in a crash severe enough to cause the air bags to inflate.**

(Continued)

(Continued)

- **If the air bags inflate, they must be replaced by an authorized HYUNDAI dealer.**
- **Do not tamper with or disconnect SRS wiring, or other components of the SRS system. Doing so could result in injury, due to accidental inflation of the air bags or by rendering the SRS inoperative.**
- **If components of the air bag system must be discarded, or if the vehicle must be scrapped, certain safety precautions must be observed. An authorized HYUNDAI dealer knows these precautions and can give you the necessary information. Failure to follow these precautions and procedures could increase the risk of personal injury.**
- **If your car was flooded and has soaked carpeting or water on flooring, you shouldn't try to start the engine; have the car towed to an authorized HYUNDAI dealer.**

Additional safety precautions

- **Never let passengers ride in the cargo area or on top of a folded-down back seat.** All occupants should sit upright, fully back in their seats with their seat belts on and their feet on the floor.
- **Passengers should not move out of or change seats while the vehicle is moving.** A passenger who is not wearing a seat belt during a crash or emergency stop can be thrown against the inside of the vehicle, against other occupants, or out of the vehicle.
- **Each seat belt is designed to restrain one occupant.** If more than one person uses the same seat belt, they could be seriously injured or killed in a collision.
- **Do not use any accessories on seat belts.** Devices claiming to improve occupant comfort or reposition the seat belt can reduce the protection provided by the seat belt and increase the chance of serious injury in a crash.
- **Passengers should not place hard or sharp objects between themselves and the air bags.** Carrying hard or sharp objects on your lap or in your mouth can result in injuries if an air bag inflates.
- **Keep occupants away from the air bag covers.** All occupants should sit upright, fully back in their seats with their seat belts on and their feet on the floor. If occupants are too close to the air bag covers, they could be injured if the air bags inflate.
- **Do not attach or place objects on or near the air bag covers.** Any object attached to or placed on the front or side impact air bag covers could interfere with the proper operation of the air bags.
- **Do not modify the front seats.** Modification of the front seats could interfere with the operation of the supplemental restraint system sensing components or side air bags.
- **Do not place items under the front seats.** Placing items under the front seats could interfere with the operation of the supplemental restraint system sensing components and wiring harnesses.
- **Never hold an infant or child on your lap.** The infant or child could be seriously injured or killed in the event of a crash. All infants and children should be properly restrained in appropriate child safety seats or seat belts in the rear seat.

⚠ WARNING

- **Sitting improperly or out of position can cause occupants to be shifted too close to a deploying air bag, strike the interior structure or be thrown from the vehicle resulting in serious injury or death.**
- **Always sit upright with the seatback in an upright position, centered on the seat cushion with your seat belt on, legs comfortably extended and your feet on the floor.**

Adding equipment to or modifying your air bag-equipped vehicle

If you modify your vehicle by changing your vehicle's frame, bumper system, front end or side sheet metal or ride height, this may affect the operation of your vehicle's air bag system.

■ Type A

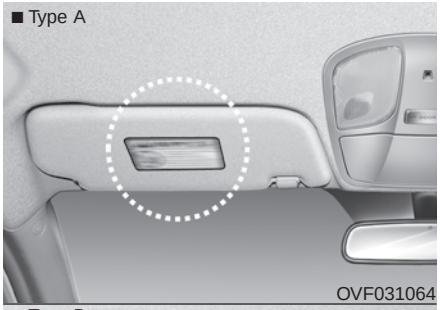

■ Type B

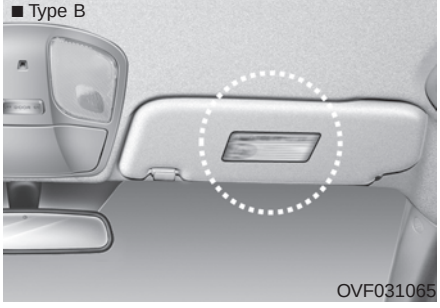

Air bag warning label (if equipped)

Air bag warning labels are attached to alert driver and passengers of potential risk of air bag system.

Note that these government warnings focus on the risk of children. We also want you to be aware of the risks which adults are exposed to which have been described in previous pages.

Keys / 4-3
Remote keyless entry / 4-5
Smart key / 4-9
Theft-alarm system / 4-12
Door locks / 4-15
Tailgate / 4-20
Windows / 4-26
Hood / 4-30

Features of your vehicle 4

Fuel filler lid / 4-32
Panorama Sunroof / 4-35
Driver position memory system / 4-39
Steering wheel / 4-41
Mirrors / 4-44
Instrument cluster / 4-48
Parking assist system / 4-79
Smart parking assist system / 4-83
Rearview camera / 4-94
Hazard warning flasher / 4-95
Lighting / 4-96
Wipers and washers / 4-104
Interior light / 4-108
Welcome system / 4-110
Defroster / 4-111

Manual climate control system / 4-112
Automatic climate control system / 4-121
Windshield defrosting and defogging / 4-133
Storage compartment / 4-136
Interior features / 4-140
Exterior features / 4-151
Audio system / 4-153

4 Features of your vehicle

KEYS

Record your key number

The key code number is stamped on the bar code tag attached to the key set. Should you lose your keys, this number will enable an authorized HYUNDAI dealer to duplicate the keys easily. Remove the bar code tag and store it in a safe place. Also, record the code number and keep it in a safe and handy place, but not in the vehicle.

Key operations

- Used to start the engine.
- Used to lock and unlock the doors.
- Used to lock and unlock the glove box.

⚠ WARNING

Use only HYUNDAI original parts for the ignition key in your vehicle. If an aftermarket key is used, the ignition switch may not return to ON after START. If this happens, the starter will continue to operate causing damage to the starter motor and possible fire due to excessive current in the wiring.

⚠ WARNING - Ignition key

Leaving children unattended in a vehicle with the ignition key is dangerous even if the key is not in the ignition. Children copy adults and they could place the key in the ignition. The ignition key would enable children to operate power windows or other controls, or even make the vehicle move, which could result in serious bodily injury or even death. Never leave the keys in your vehicle with unsupervised children.

Immobilizer system

Your vehicle may be equipped with an electronic engine immobilizer system to reduce the risk of unauthorized vehicle use.

Your immobilizer system is comprised of a small transponder in the key and electronic devices inside the vehicle.

Vehicles without smart key system

With the immobilizer system, whenever you insert your ignition key into the ignition switch and turn it to ON, it checks and determines and verifies if the ignition key is valid or not.

If the key is valid, the engine will start.

If the key is invalid, the engine will not start.

To deactivate the immobilizer system:

Insert the ignition key into the key cylinder and turn it to the ON position.

To activate the immobilizer system:

Turn the ignition key to the OFF position. The immobilizer system activates automatically. Without a valid ignition key for your vehicle, the engine will not start.

Vehicles with smart key system

Whenever the engine start/stop button is changed to the ON position, the immobilizer system checks and verifies if the key is valid or not.

If the key is valid, the engine will start.

If the key is invalid, the engine will not start.

To deactivate the immobilizer system

Change the engine start/stop button to the ON position.

To activate the immobilizer system

Change the engine start/stop button to the OFF position. The immobilizer system activates automatically. Without a valid smart key for your vehicle, the engine will not start.

⚠ WARNING

In order to prevent theft of your vehicle, do not leave spare keys anywhere in your vehicle. Your immobilizer password is a customer unique password and should be kept confidential. Do not leave this number anywhere in your vehicle.

✻ NOTICE

When starting the engine, do not use the key with other immobilizer keys around. Otherwise the engine may not start or may stop soon after it starts. Keep each key separately not to have any malfunction after you receive your new vehicle.

⚠ CAUTION

Do not put metal accessories near the ignition switch.

The engine may not start for the metal accessories may interrupt the transponder signal from normally transmitting.

✻ NOTICE

If you need additional keys or lose your keys, consult an authorized HYUNDAI dealer.

⚠ CAUTION

The transponder in your ignition key is an important part of the immobilizer system. It is designed to give years of trouble-free service, however you should avoid exposure to moisture, static electricity and rough handling. Immobilizer system malfunction could occur.

⚠ CAUTION

Do not change, alter or adjust the immobilizer system because it could cause the immobilizer system to malfunction and should only be serviced by an authorized HYUNDAI dealer.

Malfunctions caused by improper alterations, adjustments or modifications to the immobilizer system are not covered by your vehicle manufacturer warranty.

REMOTE KEYLESS ENTRY (IF EQUIPPED)

■ Type A

OVF041001

■ Type B

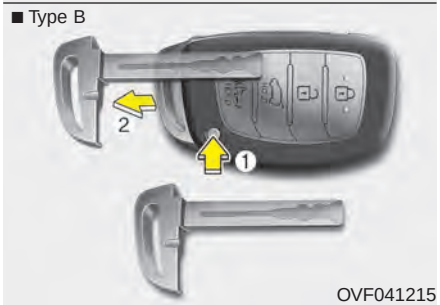

OVF041215

Remote keyless entry system operations

Type A

- To unfold the key, press the release button then the key will unfold automatically.
- To fold the key, fold the key manually while pressing the release button.

⚠ CAUTION

Do not fold the key without pressing the release button. This may damage the key.

Type B

- To remove the mechanical key, press and hold the release button and remove the mechanical key.
- To reinstall the mechanical key, put the key into the hole and push it until a click sound is heard.

■ Type A

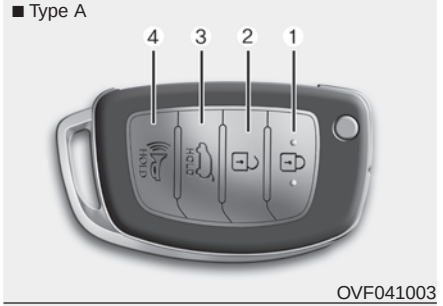

OVF041003

■ Type B

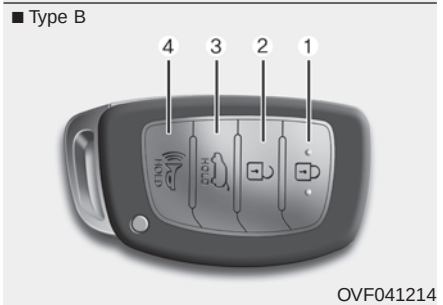

OVF041214

Lock (1)

1. Close all doors.
2. Press the lock button.
3. The hazard warning light will blink once to indicate that all doors are locked (the engine hood and tailgate must be closed).

✻ NOTICE

The doors will not lock if any door is opened.

Unlock (2)

1. Press the unlock button.
2. The hazard warning lights will blink twice to indicate that all doors are unlocked.

✻ NOTICE

After unlocking all doors, the doors will lock automatically unless a door is opened within 30 seconds.

Tailgate unlock (3)

Non-powered tailgate.

1. Press the tailgate unlock button for more than 1 second.
2. The hazard warning light will blink twice to indicate the tailgate is unlocked.

✻ NOTICE

- **After unlocking the tailgate, the tailgate will lock automatically unless it is opened within 30 seconds.**
- **Once the tailgate is opened and then closed, the tailgate will lock automatically.**
- **The word "HOLD" is written on the button to inform you that you must press and hold the button.**

Power tailgate

1. Press the tailgate unlock button for more than 1 second.
2. The hazard warning light will blink and chime will sound twice to indicate the tailgate is unlocked and opened.

✻ NOTICE

- **Once the tailgate is opened and then closed, the tailgate will lock automatically.**
- **The word "HOLD" is written on the button to inform you that you must press and hold the button.**

Alarm (4)

1. Press the alarm button for more than 0.5 second.
2. The horn will sound and hazard warning light will sound for 30 seconds.

You can activate or deactivate the Alarm function in the vehicle. Refer to "User setting" in this section.

Transmitter precautions

✱ NOTICE

The transmitter will not work if any of following occur:

- **The ignition key is in ignition switch.**
- **You exceed the operating distance limit (about 10 m [30 feet]).**
- **The battery in the transmitter is weak.**
- **Other vehicles or objects may be blocking the signal.**
- **The weather is extremely cold.**
- **The transmitter is close to a radio transmitter such as a radio station or an airport which can interfere with normal operation of the transmitter.**

When the transmitter does not work correctly, open and close the door with the ignition key. If you have a problem with the transmitter, contact an authorized HYUNDAI dealer.

⚠ CAUTION

Keep the transmitter away from water or any liquid. If the keyless entry system is inoperative due to exposure to water or liquids, it will not be covered by your manufacturer vehicle warranty.

⚠ CAUTION

Changes or modifications not expressly approved by the party responsible for compliance could void the user's authority to operate the equipment. If the keyless entry system is inoperative due to changes or modifications not expressly approved by the party responsible for compliance, it will not be covered by your manufacturer's vehicle warranty.

■ Type A

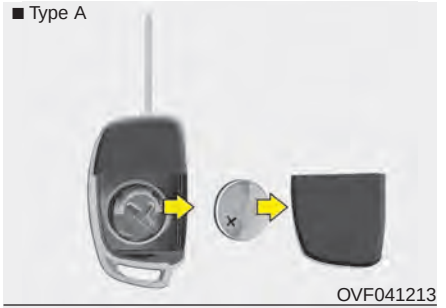

OVF041213

■ Type B

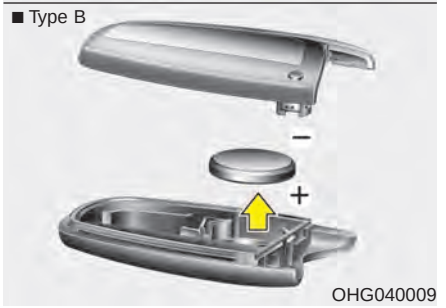

OHG040009

Battery replacement

A battery should last for several years, but if the transmitter or smart key is not working properly, try replacing the battery with a new one. If you are unsure how to use or replace the battery, contact an authorized HYUNDAI dealer.

1. Insert a slim tool into the slot and gently pry open the cover.
2. Replace the battery with a new battery (CR2032). When replacing the battery, make sure the battery positive “+” symbol faces up as indicated in the illustration.
3. Install the rear cover.

For transmitter or smart key replacement, see an authorized HYUNDAI dealer for reprogramming.

⚠ CAUTION

- ***The transmitter or smart key is designed to give you years of trouble-free use, however it can malfunction if exposed to moisture or static electricity. If you are unsure how to use or replace the battery, contact an authorized HYUNDAI dealer.***
- ***Using the wrong battery can cause the transmitter or smart key to malfunction. Be sure to use the correct battery.***
- ***To avoid damaging the transmitter or smart key, don't drop it, get it wet, or expose it to heat or sunlight.***

⚠ CAUTION

An inappropriately disposed battery can be harmful to the environment and human health.

Dispose the battery according to your local law(s) or regulation.

SMART KEY (IF EQUIPPED)

OVF041216

Smart key function

1. Door lock
2. Door unlock
3. Tailgate open
4. Alarm

With a smart key, you can lock or unlock a door and tailgate and even start the engine without inserting the key.

The functions of the buttons on a smart key are similar to the remote keyless entry. Refer to the “Remote keyless entry” in this section.

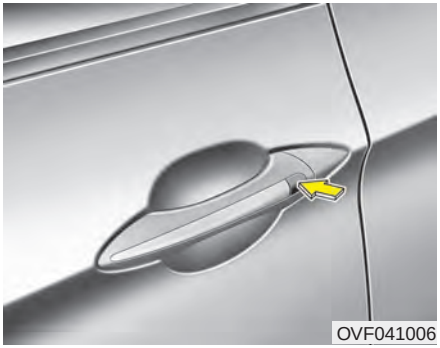
OVF041006

Carrying the smart key, you may lock and unlock the vehicle doors and tailgate.

Also, you may start the engine. Refer to the following, for more details.

Locking

1. Carry the smart key.
2. Close all doors.
3. Press the button of the outside door handle.
4. The hazard warning lights will blink once (the engine hood and tailgate must be closed).
5. Make sure that doors are locked by pulling the outside door handle.

✻ NOTICE

- **The button will only operate when the smart key is within 0.7 m (28 in.) from the outside door handle.**
- **Even though you press the outside door handle button, the doors will not lock and the chime will sound for 3 seconds if any of following occur:**
  - **The smart key is in the vehicle.**
  - **The engine start/stop button is in ACC or ON position.**
  - **Any door except the tailgate is opened.**

Unlocking

1. Carry the smart key.
2. Press the button of the front outside door handle.
3. All doors will unlock and the hazard warning lights will blink twice.

✻ NOTICE

- **The button will only operate when the smart key is within 0.7 m (28 in.) from the outside door handle.**
- **When the smart key is recognized in the area of 0.7 m (28 in.) from the front outside door handle, other people can also open the doors.**
- **After unlocking all doors, the doors will lock automatically unless a door is opened.**

Tailgate unlocking

1. Carry the smart key.
2. Press the tailgate handle switch.
3. The tailgete will unlock.

✻ NOTICE

- **Once the tailgate is opened and then closed, the tailgate will lock automatically.**
- **The button will only operate when the smart key is within 0.7 m (28 in.) from the tailgate handle.**

Smart key precautions

✻ NOTICE

- **If, for some reason, you happen to lose your smart key, you will not be able to start the engine. Tow the vehicle, if necessary, and contact an authorized HYUNDAI dealer.**
- **A maximum of 2 smart keys can be registered to a single vehicle. If you lose a smart key, you should immediately take the vehicle and key to your authorized HYUNDAI dealer to protect it from potential theft.**
- **The smart key will not work if any of the following occurs:**
  - **The smart key is close to a radio transmitter such as a radio station or an airport which can interfere with normal operation of the smart key.**
  - **The smart key is near a mobile two-way radio system or a cellular phone.**
  - **Another vehicle's smart key is being operated close to your vehicle.**

  When the smart key does not work properly, open and close the door with the mechanical key. If you have a problem with the smart key, contact an authorized HYUNDAI dealer.

⚠ CAUTION

Keep the smart key away from water or any liquid. If the keyless entry system is inoperative due to exposure to water or liquids, it will not be covered by your manufacturer's vehicle warranty.

OVF041215

Door lock/unlock in an emergency situation

If the smart key does not operate normally, you can lock or unlock the doors by using the mechanical key.

1. Press and hold the release button (1) and remove the mechanical key (2).
2. Insert the key into the hole of the outside door handle. Turn the key toward the rear of the vehicle to unlock and toward the front of the vehicle to lock.
3. To reinstall the mechanical key, put the key into the hole and push it until a click sound is heard.

THEFT-ALARM SYSTEM (IF EQUIPPED)

Vehicles equipped with a theft alarm system will have a label attached to the vehicle with the following words:
1. WARNING
2. SECURITY SYSTEM

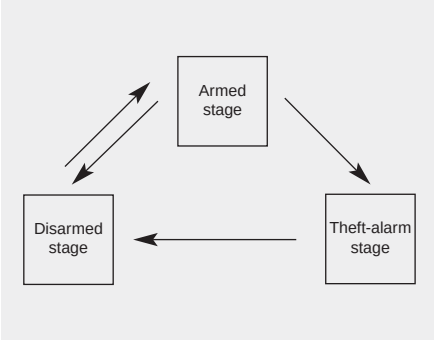

This system is designed to provide protection from unauthorized entry into the vehicle. This system is operated in three stages: the first is the "Armed" stage, the second is the "Theft-alarm" stage, and the third is the "Disarmed" stage. If triggered, the system provides an audible alarm with blinking of the hazard warning lights.

Armed stage

Using the smart key

Park the vehicle and stop the engine. Arm the system as described below.

1. Turn off the engine.
2. Make sure that all doors, the engine hood and tailgate are closed and latched.
3. • Lock the doors by pressing the button of the front outside door handle with the smart key in your possession.

   After completion of the steps above, the hazard warning lights will operate once to indicate that the system is armed.

   If the tailgate or engine hood remains opened, the hazard warning lights will not operate and theft-alarm will not arm. After this, if the tailgate and engine hood are closed, the hazard warning lights will blink once.

- Lock the doors by pressing the lock button on the smart key.

  After completion of the steps above, the hazard warning lights will operate once to indicate that the system is armed.

  If any door, tailgate or engine hood remains open, the hazard warning lights won't operate and theft-alarm will not arm. After this, if all doors, tailgate and engine hood are closed, the hazard warning lights will blink once.

Using the transmitter

Park the vehicle and stop the engine. Arm the system as described below.

1. Turn off the engine and remove the ignition key from the ignition switch.
2. Make sure that all doors, the engine hood and tailgate are closed and latched.
3. Lock the doors by pressing the lock button on the transmitter.

   After completion of the steps above, the hazard warning lights will blink once to indicate that the system is armed.

   If any door, tailgate or engine hood remains opened, the hazard warning lights will not operate and theft-alarm will not arm. After this, if all doors, tailgate and engine hood are closed, the hazard warning lights will blink once.

- **Do not arm the system until all passengers have left the vehicle. If the system is armed while a passenger(s) remains in the vehicle, the alarm may be activated when the remaining passenger(s) leave the vehicle. If any door, tailgate lid or engine hood is opened within 30 seconds after entering the armed stage, the system is disarmed to prevent unnecessary alarm.**

Theft-alarm stage

The alarm will be activated if any of the following occurs while the system is armed.

- A front or rear door is opened without using transmitter or smart key.
- The tailgate is opened without using transmitter or smart key.
- The engine hood is opened.

The siren will sound and the hazard warning lights will blink continuously for 27 seconds, unless the system is disarmed. To turn off the system, unlock the doors with the transmitter or smart key.

Disarmed stage

The system will be disarmed when:

Transmitter

- The door unlock button is pressed.
- The engine is started.
- The ignition switch is in the “ON” position for 30 seconds or more.

Smart key

- The door unlock button is pressed.
- The button of the front outside door is pressed while carrying the smart key.
- The engine is started.

After the doors are unlocked, the hazard warning lights will blink twice to indicate that the system is disarmed.
After pressing the unlock button, if any door (or tailgate) is not opened within 30 seconds, the system will be rearmed.

✻ NOTICE

- **Without smart key system**
  If the system is not disarmed with the transmitter, insert the key into the ignition switch and start the engine. Then the system will be disarmed.
- **With smart key system**
  If the system is not disarmed with the smart key, open the door with the mechanical key and start the engine. Then the system will be disarmed.
- **If you lose your keys, consult your authorized HYUNDAI dealer.**

⚠ CAUTION

Do not change, alter or adjust the theft-alarm system because it could cause the theft-alarm system to malfunction and should only be serviced by an authorized HYUNDAI dealer.

Malfunctions caused by improper alterations, adjustments or modifications to the theft-alarm system are not covered by your vehicle manufacturer warranty.

DOOR LOCKS

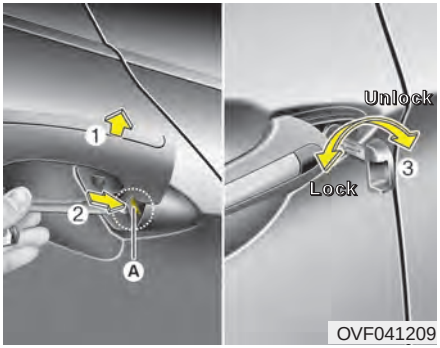

Operating door locks from outside the vehicle

Mechanical key

To remove the cover:

1. Pull out the door handle (1).
2. Press the lever (A) located inside the bottom part of the cover with a key or flat-head screwdriver (2).
3. Push out the cover while pressing the lever.

⚠ WARNING

Be careful not to damage the cover while removing it or misplace it after removing it.

- After removing the cover, turn the key toward the rear of the vehicle to unlock and toward the front of the vehicle to lock (3).
- If you lock/unlock the driver's door with a key, only the driver's door will lock/unlock.
- Once the door is unlocked, it may be opened by pulling the door handle.
- When closing the door, push the door by hand. Make sure that doors are closed securely.

Transmitter/Smart key

- Doors can be locked and unlocked with the transmitter or smart key.
- Doors can be locked and unlocked pressing the button of the outside door handle with the smart key in your possession. (vehicle's equipped with smart key system)
- Once the doors are unlocked, they may be opened by pulling the door handle.
- When closing the door, push the door by hand. Make sure that doors are closed securely.

✻ NOTICE

- **In cold and wet climates, door lock and door mechanisms may not work properly due to freezing conditions.**
- **If the door is locked/unlocked multiple times in rapid succession with either the vehicle key or door lock switch, the system may stop operating temporarily in order to protect the circuit and prevent damage to system components.**

⚠ WARNING

- **If you don't close the door securely, the door may open again.**
- **Be careful that someone's body and hands are not trapped when closing the door.**

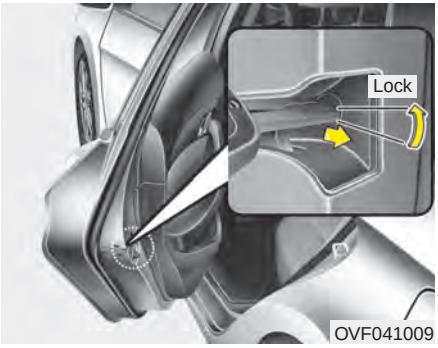

OVF041009

In case of an emergency

If the power door lock switch does not operate electrically, the only way to lock the door(s) is with the mechanical key from the outside key hole.

Doors without the outside key hole, you can lock the door as follows:

1. Open the door.
2. Insert the key into the emergency door lock hole and turn the key horizontally to lock.
3. Close the door securely.

✻ NOTICE

Once the tailgate is closed when the power door lock switch does not operate electrically, you will not be able to open the tailgate.

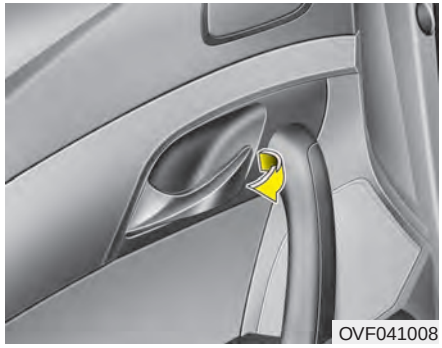
OVF041008

Operating door locks from inside the vehicle

With the door handle

Front door

If the inner door handle is pulled when the door is locked, the door will unlock and open.

Rear door

If the inner door handle is pulled once when the door is locked, the door will unlock.

If the inner door handle is pulled once more, the door will open.

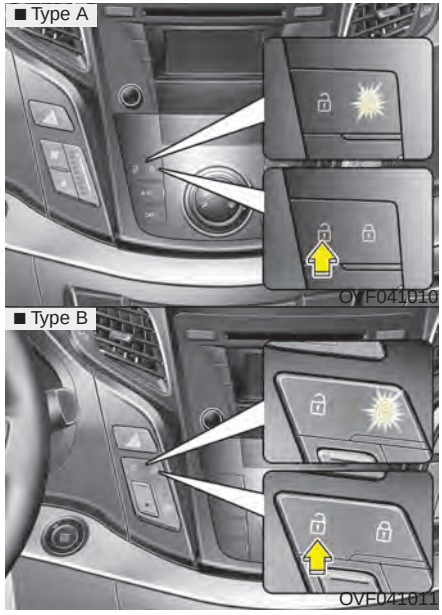

With central door lock/unlock switch

It is operated by pressing the door lock/unlock switch.

- When you press the central door lock switch, all vehicle doors will lock and the indicator light on the switch will illuminate.
- If any door is opened when the switch is pressed, all doors will not lock.

- If any door is unlocked, the indicator of the central door lock switch will go off.
- When you press the central door unlock switch, all vehicle doors will unlock.

✻ NOTICE

Once the doors are locked with the transmitter or smart key, the doors cannot be unlocked with the central door lock/unlock switch.

⚠ WARNING - Door lock malfunction

If a power door lock ever fails to function while you are in the vehicle, try one or more of the following:

- **Operate the other door locks and handles.**
- **Lower the driver's window and use the key to unlock the door from outside.**
- **Move to the cargo area and open the tailgate.**

⚠ WARNING - Doors

- **The doors should always be fully closed and locked while the vehicle is in motion to prevent accidental opening of the door. Locked doors will also discourage potential intruders when the vehicle stops or slows.**
- **Be careful when opening doors and watch for vehicles, motorcycles, bicycles or pedestrians approaching the vehicle in the path of the door. Opening a door when something is approaching can cause damage or injury.**

⚠ WARNING - Unlocked vehicles

Leaving your vehicle unlocked can invite theft or possible harm to you or others from someone hiding in your vehicle while you are gone. Always remove the ignition key, engage the parking brake, close all windows and lock all doors when leaving your vehicle unattended.

⚠ WARNING - Unattended children

An enclosed vehicle can become extremely hot, causing death or severe injury to unattended children or animals who cannot escape the vehicle. Furthermore, children might operate features of the vehicle that could injure them, or they could encounter other harm, possibly from someone gaining entry to the vehicle. Never leave children or animals unattended in your vehicle.

Deadlocks (if equipped)

Some vehicles are equipped with a deadlock system. Deadlocks prevent opening of a door from either inside or outside the vehicle once the deadlocks have been activated providing an additional measure of vehicle security.

To lock the vehicle using the deadlock function, the doors must be locked by using the transmitter or smart key. To unlock the vehicle, the transmitter or smart key must be used again.

⚠ WARNING

Do not lock the doors with the transmitter or the smart key with anybody left in the vehicle. The passenger in the vehicle cannot unlock the doors with the door lock button. For example, if the door is locked with the transmitter, the passenger in the vehicle cannot unlock the door without the transmitter.

Door lock/unlock features

Impact sensing door unlock system

All doors will automatically unlock when an impact causes the air bags to deploy.

Speed sensing door lock system (if equipped)

All doors will automatically lock after the vehicle speed exceeds 15 km/h.

Engine off door unlock system (if equipped)

All doors will automatically unlock:

Without smart key system

When the key is removed from the ignition switch.

With smart key system

When the engine start/stop button is in the OFF position.

Shift lever door lock/unlock system

- All doors will automatically lock when the shift lever is moved out of P (Park).
- All doors will automatically unlock when the shift lever is moved into P (Park).

You can activate or deactivate the auto lock/unlock features in the vehicle. Refer to "User setting" in this section.

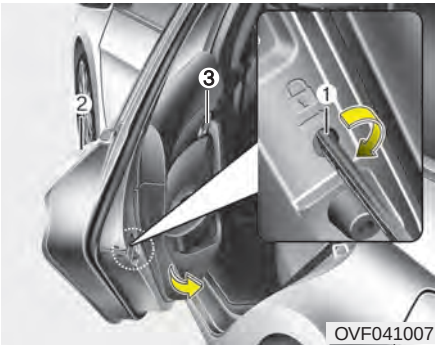

Child-protector rear door lock

The child safety lock is provided to help prevent children from accidentally opening the rear doors from inside the vehicle. The rear door safety locks should be used whenever children are in the vehicle.

1. Open the rear door.
2. Insert a key (or screwdriver) into the hole (1) and turn it to the “lock(🔒)” position. When the child safety lock is in the lock position, the rear door will not open even though the inner door handle (3) is pulled inside the vehicle.
3. Close the rear door.

To open the rear door, pull the outside door handle (2).

Even though the doors may be unlocked, the rear door will not open by pulling the inner door handle (3) until rear door child safety lock is unlocked.

⚠ WARNING - Rear door locks

If children accidentally open the rear doors while the vehicle is in motion, they could fall out and be severely injured or killed. To prevent children from opening the rear doors from the inside, the rear door safety locks should be used whenever children are in the vehicle.

TAILGATE

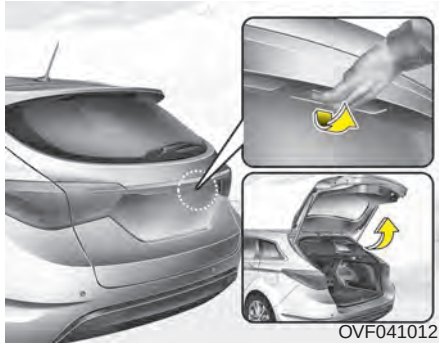
OVF041012

Non-powered tailgate

Opening the tailgate

- The tailgate is locked or unlocked when all doors are locked or unlocked with the key, transmitter, smart key or central door lock/unlock switch.
- Only the tailgate is unlocked if the tailgate unlock button on the transmitter or smart key is pressed for approximately 1 second.
- If unlocked, the tailgate can be opened by pressing the handle and pulling it up.
- Once the tailgate is opened and then closed, the tailgate locks automatically. (All doors must be locked.)

✻ NOTICE

In cold and wet climates, door lock and door mechanisms may not work properly due to freezing conditions.

⚠ WARNING

The tailgate swings upward. Make sure no objects or people are near the rear of the vehicle when opening the tailgate.

⚠ CAUTION

Make certain that you close the tailgate before driving your vehicle. Possible damage may occur to the tailgate lift cylinders and attaching hardware if the tailgate is not closed prior to driving.

OVF041013

Closing the tailgate

Lower and push down the tailgate firmly. Make sure that the tailgate is securely latched.

⚠ WARNING

Make sure your hands, feet and other parts of your body are safely out of the way before closing the tailgate.

⚠ CAUTION

Make sure nothing is near the tailgate latch and striker while closing the tailgate. It may damage the tailgate's latch.

⚠ WARNING - Exhaust fumes

If you drive with the tailgate opened, you will draw dangerous exhaust fumes into your vehicle which can cause serious injury or death to vehicle occupants.

If you must drive with the tailgate open, keep the air vents and all windows open so that additional outside air comes into the vehicle.

⚠ WARNING - Rear cargo area

Occupants should never ride in the rear cargo area where no restraints are available. To avoid injury in the event of an accident or sudden stops, occupants should always be properly restrained.

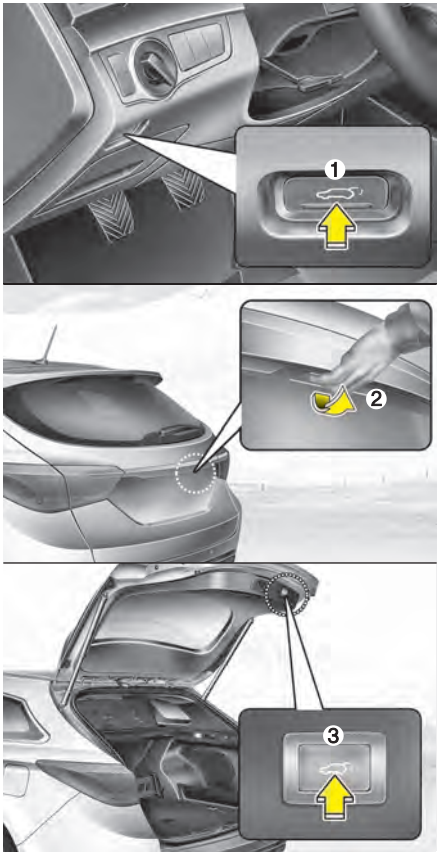

OVF041015/OVF041014/OVF041016

Power tailgate (if equipped)

(1) Power tailgate open button
(2) Power tailgate handle switch
(3) Power tailgate close button

✻ NOTICE

The power tailgate operates when:

- **Manual shift lever is in neutral.**
- **Automatic shift lever is in P (Park).**

⚠ WARNING

Never leave children or animals unattended in your vehicle. Children or animals might operate the power tailgate that could result in injury to themselves or others, or damage the vehicle.

⚠ WARNING

Make sure there are no people or objects around the tailgate before operating the power tailgate. Wait until the tailgate is opened fully and stopped before loading or unloading cargo or passengers from the vehicle.

⚠ CAUTION

Do not close or open the power tailgate manually. This may cause damage to the power tailgate. If it is necessary to close or open the power tailgate manually when the battery is discharged or disconnected, do not apply excessive force.

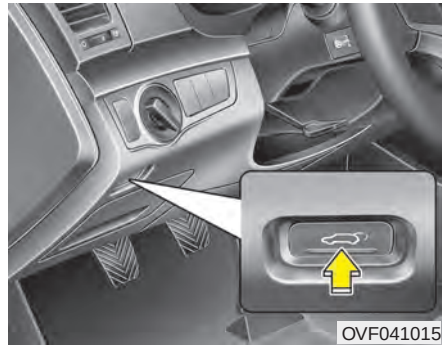
OVF041015

Opening the tailgate

The power tailgate will open automatically by doing one of the following:

- Press the tailgate unlock button on the transmitter or smart key.
- Press the power tailgate open button.

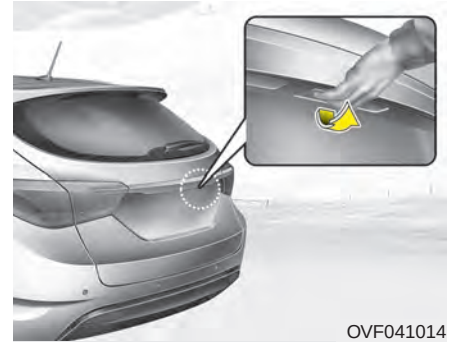
OVF041014

- Press the tailgate handle switch carrying the smart key with you.

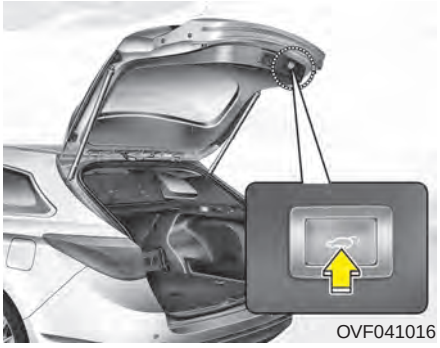
OVF041016

Closing the tailgate

1. Press the power tailgate close button (approximately 1 second).
2. The tailgate will close and lock automatically.

⚠ WARNING

The chime will sound and the hazard warning flasher will blink 10 times if you drive with the tailgate closed but not locked. Stop your vehicle immediately at a safe place and check if your tailgate is securely locked.

Power tailgate non-opening conditions

The power tailgate will not open or close automatically, when the vehicle is moving more than 3km/h (2mph).

⚠ WARNING

The chime will sound continuously if you drive over 3km/h(2mph) with the tailgate opened. Stop your vehicle immediately at a safe place and check if your tailgate is opened.

✻ NOTICE

- **The power tailgate can be operated when the engine is not running. However the power tailgate operation consumes large amounts of vehicle electric power. To prevent the battery from being discharged, do not operate it excessively e.g.: more than approximately 10 times repeatedly.**
- **To prevent the battery from being discharged, do not leave the power tailgate in the open position for a long lime.**
- **Do not modify or repair any part of the power tailgate by yourself. This must be done by an authorized HYUNDAI dealer.**
- **When jacking up the vehicle to change a tire or repair the vehicle, do not operate the power tailgate. This could cause the power tailgate to operate improperly.**
- **In cold and wet climates, the power tailgate may not work properly due to freezing conditions.**

OVF041017

Automatic reversal

During power opening and closing if the power tailgate is blocked by an object or part of the body, the power tailgate will detect the resistance.

- If the resistance is detected while opening the tailgate, it will stop and move in the opposite direction.
- If the resistance is detected while closing the tailgate, it will stop and move in the opposite direction.

However, if the resistance is weak such as from an object that is thin or soft, or the tailgate is near the latched position, the automatic stop and reversal may not detect the resistance.

If the automatic reversal feature operates continuously more than twice during opening or closing operation, the power tailgate may stop at that position. At this time, close the tailgate manually and operate the tailgate automatically again.

⚠ WARNING

Never intentionally place any object or part of your body in the path of the power tailgate to make sure the automatic reversal operates.

How to reset the power tailgate

If the battery has been discharged or disconnected, or if the related fuse has been replaced or disconnected, for the power tailgate to operate normally, reset the power tailgate as follow:

1. Put the shift lever in P (Park).
2. Press the tailgate handle switch and tailgate close button at the same time for more than 3 seconds. (the chime will sound)
3. Close the tailgate manually.

If the power tailgate does not work properly after the above procedure, have the system checked by an authorized HYUNDAI dealer.

✻ NOTICE

If the power tailgate does not operate normally, first check the following condition before using the power tailgate.
Check if the shift lever is in:

- **neutral for manual transaxle vehicles**
- **P (Park) for automatic transaxle vehicles**

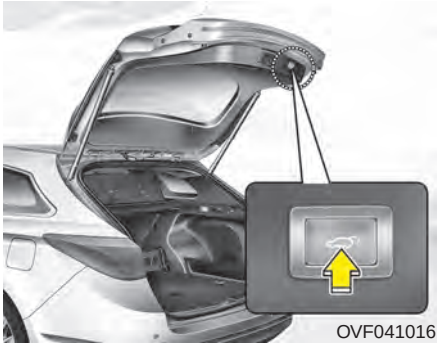
OVF041016

Power tailgate opening height user setting

The driver may set the height of a fully opened tailgate by following the below instruction.

1. Position the tailgate manually to the height you prefer.
2. Press the tailgate close button for more than 3 seconds.
3. Close the tailgate manually after hearing the buzzer sound.

The tailgate will open to the height the driver has set up.

OVF041018

Emergency tailgate safety release

Your vehicle is equipped with the emergency tailgate safety release lever located on the bottom of the tailgate. When someone is inadvertently locked in the luggage compartment. The tailgate can be opened by doing as follows:

1. Remove the cover.
2. Push the release lever to the right.
3. Push up the tailgate.

⚠ WARNING

- **For emergencies, be fully aware of the location of the emergency tailgate safety release lever in the vehicle and how to open the tailgate if you are accidentally locked in the luggage compartment.**
- **No one should be allowed to occupy the luggage compartment of the vehicle at any time. The luggage compartment is a very dangerous location in the event of a crash.**
- **Use the release lever for emergencies only. Use with extreme caution, especially while the vehicle is in motion.**

WINDOWS

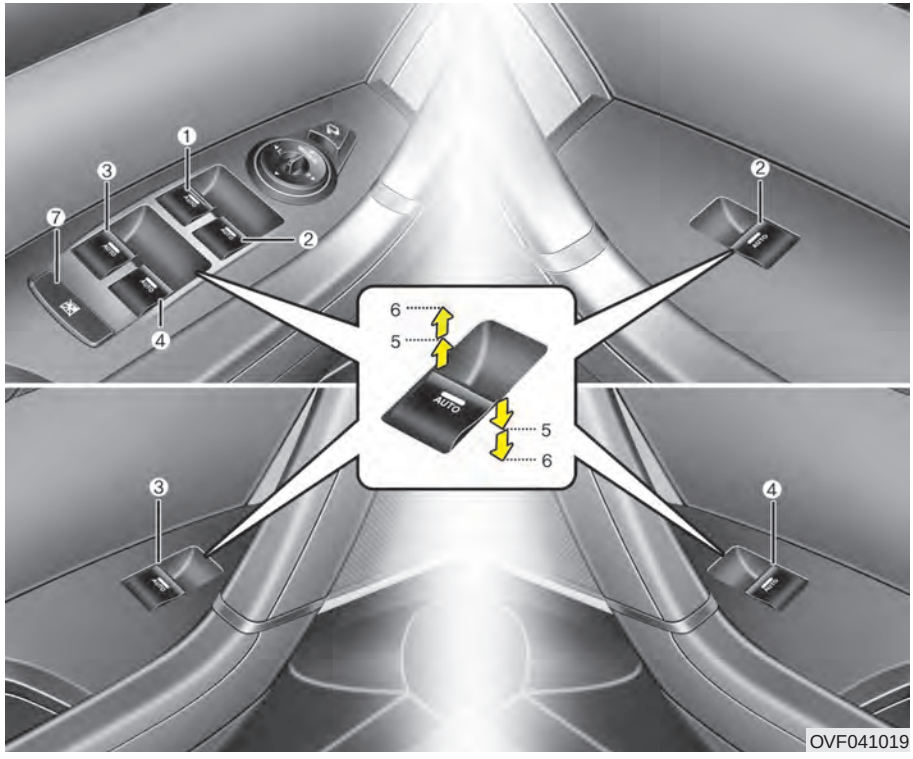

(1) Driver's door power window switch
(2) Front passenger's door power window switch
(3) Rear door (left) power window switch
(4) Rear door (right) power window switch
(5) Window opening and closing
(6) Automatic power window up*/down*
(7) Power window lock switch

*: if equipped

✻ NOTICE

In cold and wet climates, power windows may not work properly due to freezing conditions.

Power windows

The ignition switch must be in the ON position for power windows to operate. Each door has a power window switch that controls the door's window. The driver's door has a master power window switch that controls all the windows in the vehicle. Also, the driver has a power window lock switch which can block the operation of rear passenger windows.

The power windows can be operated for approximately 30 seconds after the ignition key is removed or turned to the ACC or LOCK position. However, if the front doors are opened, the power windows cannot be operated even within the 30 seconds period.

✻ NOTICE

While driving with the rear windows down or with the sunroof (if equipped) in an open (or partially open position), your vehicle may demonstrate a wind buffeting or pulsation noise. This noise is a normal occurrence and can be reduced or eliminated by taking the following actions. If the noise occurs with one or both of the rear windows down, partially lower both front windows approximately one inch. If you experience the noise with the sunroof open, slightly reduce the size of the sunroof opening.

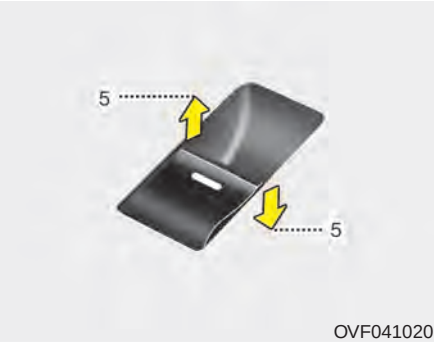

OVF041020

Window opening and closing

Type A

To open or close a window, press down or pull up the front portion of the corresponding switch to the first detent position (5).

OVF041021

Type B

Auto up/down window (if equipped)

Pressing or pulling up the power window switch momentarily to the second detent position (6) completely lowers or lifts the window even when the switch is released. To stop the window at the desired position while the window is in operation, pull up or press down and release the switch.

✻ NOTICE

If the power window does not operate normally, the automatic power window system must be reset as follows:

1. **Turn the ignition switch to the ON position.**
2. **Close the driver's window and continue pulling up the driver's power window switch for at least 1 second after the window is completely closed.**

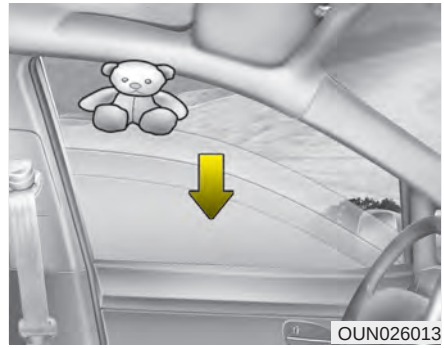

Automatic reversal

If the upward movement of the window is blocked by an object or part of the body, the window will detect the resistance and will stop upward movement. The window will then lower approximately 30 cm (11.8 in.) to allow the object to be cleared.

If the window detects the resistance while the power window switch is pulled up continuously, the window will stop upward movement then lower approximately 2.5 cm (1 in.). And if the power window switch is pulled up continuously again within 5 seconds after the window is lowered by the automatic window reversal feature, the automatic window reversal will not operate.

✻ NOTICE

The automatic reverse feature is only active when the "auto up" feature is used by fully pulling up the switch. The automatic reverse feature will not operate if the window is raised using the halfway position on the power window switch.

⚠ WARNING

Always check for obstructions before raising any window to avoid injuries or vehicle damage. If an object less than 4 mm (0.16 in.) in diameter is caught between the window glass and the upper window channel, the automatic reverse window may not detect the resistance and will not stop and reverse direction.

Power window lock button

For Europe

- The driver can disable the power window switches on rear passenger doors by pressing the power window lock button located on the driver's door to the LOCK position (pressed).

Except Europe

- The driver can disable the power window switches on the passenger doors by pressing the power window lock button located on the driver's door to the LOCK position (pressed).
- **When the power window lock switch is in the LOCK position (pressed), the driver's master control cannot operate the front and/or rear passenger door power windows.**

⚠ CAUTION

- ***To prevent possible damage to the power window system, do not open or close two windows or more at the same time. This will also ensure the longevity of the fuse.***
- ***Never try to operate the main switch on the driver's door and the individual door window switch in opposing directions at the same time. If this is done, the window will stop and cannot be opened or closed.***

⚠ WARNING - Windows

- **NEVER leave the ignition key in the vehicle.**
- **NEVER leave any child unattended in the vehicle. Even very young children may inadvertently cause the vehicle to move, entangle themselves in the windows, or otherwise injure themselves or others.**
- **Always double check to make sure all arms, hands, head and other obstructions are safely out of the way before closing a window.**
- **Do not allow children to play with the power windows. Keep the driver's door power window lock switch in the LOCK position (pressed). Serious injury can result from unintentional window operation by the child.**
- **Do not extend face or arms outside the window while driving.**

HOOD

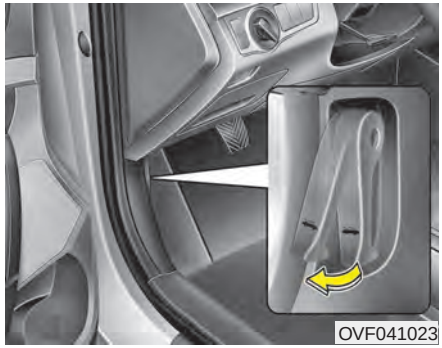
OVF041023

Opening the hood

1. Pull the release lever to unlatch the hood. The hood should pop open slightly.

⚠ WARNING

Open the hood after turning off the engine on a flat surface, shifting the shift lever to the P(Park) position for automatic transaxle and to the 1(First) gear or R(Reverse) for manual transaxle, and setting the parking brake.

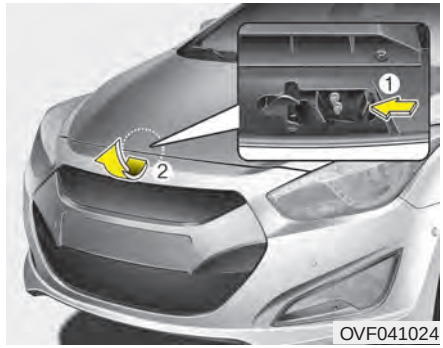

OVF041024

2. Go to the front of the vehicle, raise the hood slightly, push up the secondary latch (1) inside of the hood center and lift the hood (2).
3. Raise the hood. It will raise completely by itself after it has been raised halfway.

Closing the hood

1. Before closing the hood, check the following:
   - All filler caps in engine compartment must be correctly installed.
   - Gloves, rags or any other combustible material must be removed from the engine compartment.
2. Lower the hood halfway and push it down. Make sure the hood is locked securely.

⚠ WARNING - Hood

- **Before closing the hood, ensure that all obstructions are removed from the hood opening. Closing the hood with an obstruction present in the hood opening may result in property damage or severe personal injury.**
- **Do not leave gloves, rags or any other combustible material in the engine compartment. Doing so may cause a heat-induced fire.**

⚠ WARNING

- **Always double check to be sure that the hood is firmly latched before driving away. If it is not latched, the hood could fly open while the vehicle is being driven, causing a total loss of visibility, which might result in an accident.**
- **The support rod must be inserted completely into the hole whenever you inspect the engine compartment. This will prevent the hood from falling and possibly injuring you.**
- **Do not move the vehicle with the hood raised. The view will be blocked and the hood could fall or be damaged.**

FUEL FILLER LID

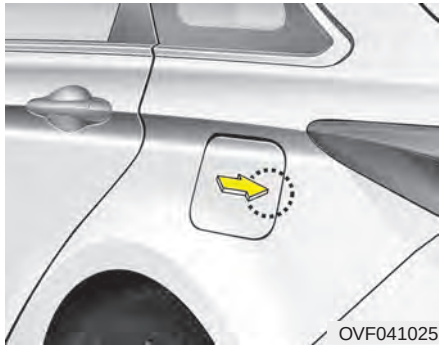
OVF041025

Opening the fuel filler lid

1. To open the lid, press the center edge of the lid.

✻ NOTICE

The lid will open only when a door is unlocked. If the theft-alarm system is activated, the fuel filler lid will not open.

OVF041026

2. Fully open the lid.
3. To open the cap, turn it counterclockwise.
4. Refuel as needed.

✻ NOTICE

If the fuel-filler lid does not open because ice has formed around it, tap lightly or push on the lid to break the ice and release the lid. Do not pry on the lid. If necessary, spray around the lid with an approved de-icer fluid (do not use radiator anti-freeze) or move the vehicle to a warm place and allow the ice to melt.

Closing the fuel filler lid

1. To install the cap, turn it clockwise until it “clicks”. This indicates that the cap is securely tightened.
2. To close the lid, press the edge of the lid. Make sure it is securely closed.

⚠ WARNING - Refueling

- If pressurized fuel sprays out, it can cover your clothes or skin and thus subject you to the risk of fire and burns. Always remove the fuel cap carefully and slowly. If the cap is venting fuel or if you hear a hissing sound, wait until the condition stops before completely removing the cap.
- Do not "top off" after the nozzle automatically shuts off when refueling.
- Always check that the fuel cap is installed securely to prevent fuel spillage in the event of an accident.

⚠ WARNING - Refueling dangers

Automotive fuels are flammable materials. When refueling, please note the following guidelines carefully. Failure to follow these guidelines may result in severe personal injury, severe burns or death by fire or explosion.

- Read and follow all warning posted at the gas station facility.
- Before refueling note the location of the Emergency Gasoline Shut-Off, if available, at the gas station facility.
- Before touching the fuel nozzle, you should eliminate potentially dangerous static electricity discharge by touching another metal part of the vehicle, a safe distance away from the fuel filler neck, nozzle, or other gas source.

(Continued)

(Continued)

- Do not get back into a vehicle once you have begun refueling since you can generate static electricity by touching, rubbing or sliding against any item or fabric (polyester, satin, nylon, etc.) capable of producing static electricity. Static electricity discharge can ignite fuel vapors resulting in rapid burning. If you must re-enter the vehicle, you should once again eliminate potentially dangerous static electricity discharge by touching a metal part of the vehicle, away from the fuel filler neck, nozzle or other gasoline source.
- When using an approved portable fuel container, be sure to place the container on the ground prior to refueling. Static electricity discharge from the container can ignite fuel vapors causing a fire. Once refueling has begun, contact with the vehicle should be maintained until the filling is complete.

(Continued)

(Continued)

Use only portable plastic fuel containers designed to carry and store gasoline.

- **Do not use cellular phones while refueling. Electric current and/or electronic interference from cellular phones can potentially ignite fuel vapors causing a fire.**
- **When refueling, always shut the engine off. Sparks produced by electrical components related to the engine can ignite fuel vapors causing a fire. Once refueling is complete, check to make sure the filler cap and filler door are securely closed, before starting the engine.**
- **DO NOT use matches or a lighter and DO NOT SMOKE or leave a lit cigarette in your vehicle while at a gas station especially during refueling. Automotive fuel is highly flammable and can, when ignited, result in fire.**

(Continued)

(Continued)

- **If a fire breaks out during refueling, leave the vicinity of the vehicle, and immediately contact the manager of the gas station and then contact the local fire department. Follow any safety instructions they provide.**

⚠ CAUTION

- *Make sure to refuel your vehicle according to the "Fuel requirements" suggested in section 1.*
- *If the fuel filler cap requires replacement, use only a genuine HYUNDAI cap or the equivalent specified for your vehicle. An incorrect fuel filler cap can result in a serious malfunction of the fuel system or emission control system.*
- *Do not spill fuel on the exterior surfaces of the vehicle. Any type of fuel spilled on painted surfaces may damage the paint.*
- *After refueling, make sure the fuel cap is installed securely to prevent fuel spillage in the event of an accident.*

PANORAMA SUNROOF (IF EQUIPPED)

OVF041027

If your vehicle is equipped with a sunroof, you can slide or tilt your sunroof with the sunroof control lever located on the overhead console.

The sunroof can only be opened, closed, or tilted when the ignition switch is in the ON position.

✻ NOTICE

- **In cold and wet climates, the sunroof may not work properly due to freezing conditions.**
- **After a vehicle is washed or in a rainstorm be sure to wipe off any water that is on the sunroof before operating it.**

⚠ CAUTION

- ***Do not continue to move the sunroof control lever after the sunroof is fully opened, closed, or tilted. Damage to the motor or system components could occur.***
- ***Make sure the sunroof is fully closed when leaving your vehicle. If the sunroof is opened, rain or snow may leak through the sunroof and wet the interior as well as cause theft.***

✻ NOTICE

The sunroof cannot tilt when it is in the slide position but can slide while in a tilt position.

⚠ WARNING

- **Never adjust the sunroof or sunshade while driving. This could result in loss of control and an accident that may cause death, serious injury, or property damage.**
- **If you would like to carry items on the roof using a cross bar, do not operate the sunroof.**
- **When carrying cargo on the roof, do not load heavy items above the sunroof or glass roof.**
- **Do not allow children to operate the sunroof.**

OYF049214

Sunshade

- To open the sunshade, pull the sunroof control lever backward to the first detent position.
- To close the sunshade when the sunroof glass is closed, push the sunroof control lever forward.

To stop the sliding at any point, pull or push the sunroof control lever momentarily.

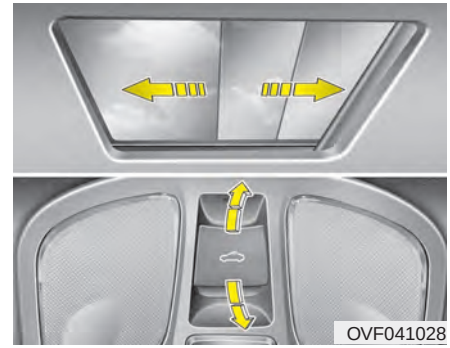
OVF041028

Sliding the sunroof

When the sunshade is closed

If you pull the sunroof control lever backward to the second detent position, the sunshade will slide all the way open then the sunroof glass will slide all the way open. To stop the sunroof movement at any point, pull or push the sunroof control lever momentarily.

When the sunshade is opened

If you pull the sunroof control lever backward, the sunroof glass will slide all the way open. To stop the sunroof movement at any point, pull or push the sunroof control lever momentarily.

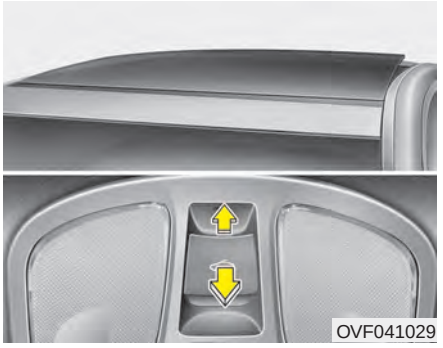
OVF041029

Tilting the sunroof

When the sunshade is closed

If you push the sunroof control lever upward, the sunshade will slide all the way open then the sunroof glass will tilt.

To stop the sunroof movement at any point, pull or push the sunroof control lever momentarily.

When the sunshade is opened

If you push the sunroof control lever upward, the sunroof glass will tilt.

To stop the sunroof movement at any point, pull or push the sunroof control lever momentarily.

Closing the sunroof

To close the sunroof glass only

Push the sunroof control lever forward to the first detent position or pull the lever downward.

To close the sunroof glass with the sunshade

Push the sunroof control lever forward to the second detent position. The sunroof glass will close then the sunshade close automatically.

To stop the sunroof movement at any point, pull or push the sunroof control lever momentarily.

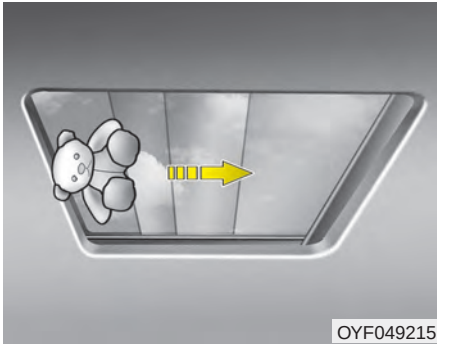
OYF049215

Automatic reversal

If an object or part of the body is detected while the sunroof glass or sunshade is closing automatically, it will reverse the direction, and then stop.

The auto reverse function does not work if a tiny obstacle is between the sliding glass or sunshade and the sunroof sash. You should always check that all passengers and objects are away from the sunroof before closing it.

⚠ WARNING - Sunroof

- **Be careful that no head, hands and body parts are obstructed by a closing sunroof.**
- **Do not extend the face, neck, arms or body outside the sunroof while driving.**
- **Make sure your hands and head are safely out of the way before closing a sunroof.**

⚠ CAUTION

- ***Periodically remove any dirt that may accumulate on the guide rail.***
- ***If you try to open the sunroof when the temperature is below freezing or when the sunroof is covered with snow or ice, the glass or the motor could be damaged.***

Resetting the sunroof

Whenever the vehicle battery is disconnected or discharged, you must reset your sunroof system as follows:

1. Turn the ignition switch to the ON position.
2. Close the sunshade and sunroof completely if opened.
3. Release the sunroof control lever.
4. Push the sunroof control lever forward in the direction of close (about 10 seconds) until the sunroof moves a little. Then, release the lever.
5. Push the sunroof control lever forward in the direction of close, until the sunroof operates as follows again:

   SUNSHADE OPEN → TILT OPEN → SLIDE OPEN → SLIDE CLOSE → SUNSHADE CLOSE

   Then, release the lever.

When this is complete, the sunroof system has been reset.

DRIVER POSITION MEMORY SYSTEM (IF EQUIPPED)

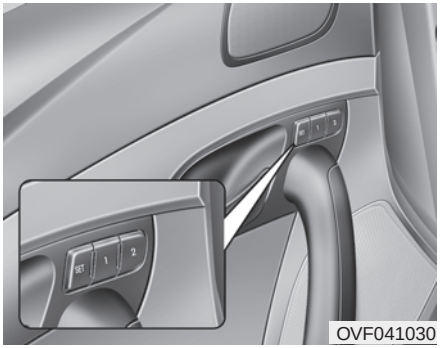

OVF041030

A driver position memory system is provided to store and recall the driver seat position with a simple button operation. By saving the desired position into the system memory, different drivers can reposition the driver seat based upon their driving preference. If the battery is disconnected, the position memory will be erased and the driving position should be restored in the system.

⚠ WARNING

Never attempt to operate the driver position memory system while the vehicle is moving.

This could result in loss of control, and an accident causing death, serious injury, or property damage.

Storing positions into memory using the buttons on the door

Storing driver's seat positions

1. Change the ignition switch to the ON position.
2. Adjust the driver's seat comfortable for the driver.
3. Press SET button on the control panel. The system will beep once.
4. Press one of the memory buttons (1 or 2) within 5 seconds after pressing the SET button. The system will beep twice when memory has been successfully stored.

Recalling positions from memory

1. Change the ignition switch to the ON position.
2. To recall the position in the memory, press the desired memory button (1 or 2). The system will beep once, then the driver's seat will automatically adjust to the stored position.

Adjusting the control switch for the driver's seat while the system is recalling the stored position will cause the movement to stop and move in the direction that the control switch is moved.

⚠ WARNING

Use caution when recalling the adjustment memory while sitting in the vehicle. Push the seat position control switch to the desired position immediately if the seat moves too far in any direction.

Easy access function (if equipped)

The system will move the driver's seat automatically as follows:

- Without smart key system
  - It will move the driver's seat rearward when the ignition key is removed.
  - It will move the driver's seat forward when the ignition key is inserted.
- With smart key system
  - It will move the driver's seat rearward when the engine start/stop button is changed to the OFF position.
  - It will move the driver's seat forward when the engine start/stop button is changed to the ACC or START position.

You can activate or deactivate this feature. Refer to "User setting" in this section.

STEERING WHEEL

Electronic power steering

Power steering uses the motor to assist you in steering the vehicle. If the engine is off or if the power steering system becomes inoperative, the vehicle may still be steered, but it will require increased steering effort.

The motor driven power steering is controlled by the power steering control unit which senses the steering wheel torque and vehicle speed to command the motor.

The steering wheel becomes heavier as the vehicle's speed increases and becomes lighter as the vehicle's speed decreases for better control of the steering wheel.

Should you notice any change in the effort required to steer during normal vehicle operation, have the power steering checked by an authorized HYUNDAI dealer.

✻ NOTICE

The following symptoms may occur during normal vehicle operation:

- **The EPS warning light does not illuminate.**
- **The steering effort is high immediately after turning the ignition switch on. This happens as the system performs the EPS system diagnostics. When the diagnostics is completed, the steering wheel will return to its normal condition.**
- **A click noise may be heard from the EPS relay after the ignition switch is turned to the ON or LOCK/OFF position.**
- **Motor noise may be heard when the vehicle is at a stop or at a low driving speed.**
- **The steering effort increases if the steering wheel is rotated continuously when the vehicle is not in motion. However, after a few minutes, it will return to its normal conditions.**

(Continued)

(Continued)

- **If the Electronic Power Steering System does not operate normally, the warning light will illuminate on the instrument cluster. The steering wheel may become difficult to control or operate abnormally. Take your vehicle to an authorized HYUNDAI dealer and have the vehicle checked as soon as possible.**
- **When you operate the steering wheel in low temperature, abnormal noise could occur. If temperature rises, the noise will disappear. This is a normal condition.**

Tilt steering

A tilt steering wheel allows you to adjust the steering wheel before you drive. You can also raise it to give your legs more room when you exit and enter the vehicle (if equipped).

The steering wheel should be positioned so that it is comfortable for you to drive, while permitting you to see the instrument panel warning lights and gauges.

⚠ WARNING

- **Never adjust the angle and height of steering wheel while driving. You may lose your steering control and cause severe personal injury or accidents.**
- **After adjusting, push the steering wheel both up and down to be certain it is locked in position.**

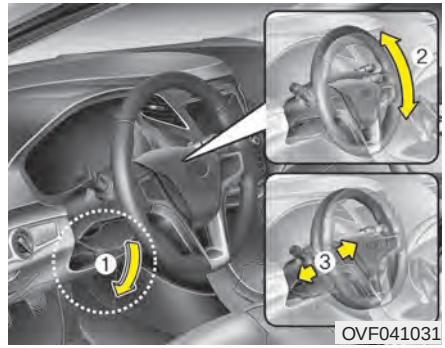

OVF041031

To change the steering wheel angle, pull down the lock release lever (1), adjust the steering wheel to the desired angle (2) and height (3), then pull up the lock-release lever to lock the steering wheel in place. Be sure to adjust the steering wheel to the desired position before driving.

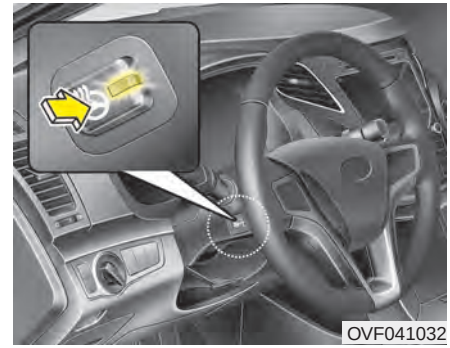
OVF041032

Heated steering wheel (if equipped)

With the ignition switch in the ON position, pressing the heated steering wheel button warms the steering wheel. The indicator on the button will illuminate and notify you on the LCD display.

To turn the heated steering wheel off, press the button once again. The indicator on the button will turn off and notify you on the LCD display.

✻ NOTICE

The heated steering wheel will turn off automatically approximately 30 minutes after the heated steering wheel is turned on.

⚠ **CAUTION**

Do not install any grip to operate the steering wheel. This causes damage to the heated steering wheel system.

Horn

To sound the horn, press the horn symbol on your steering wheel.
Check the horn regularly to be sure it operates properly.

✻ **NOTICE**

To sound the horn, press the area indicated by the horn symbol on your steering wheel (see illustration). The horn will operate only when this area is pressed.

⚠ **CAUTION**

Do not strike the horn severely to operate it, or hit it with your fist. Do not press on the horn with a sharp-pointed object.

MIRRORS

Inside rearview mirror

Adjust the rearview mirror so that the center view through the rear window is seen. Make this adjustment before you start driving.

⚠ WARNING - Rear visibility

Do not place objects in the rear seat or cargo area which would interfere with your vision out the rear window.

⚠ WARNING

Do not adjust the rearview mirror while the vehicle is moving. This could result in loss of control, and an accident which could cause death, serious injury or property damage.

⚠ WARNING

Do not modify the inside mirror and do not install a wide mirror. It could result in injury, during an accident or deployment of the air bag.

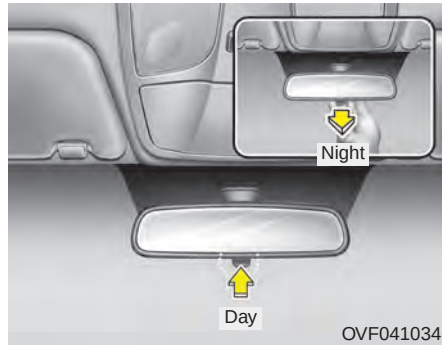

Day/night rearview mirror (if equipped)

Make this adjustment before you start driving and while the day/night lever is in the day position.

Pull the day/night lever toward you to reduce glare from the headlights of vehicles behind you during night driving.

Remember that you lose some rearview clarity in the night position.

Electric chromic mirror (ECM) (if equipped)

The electric rearview mirror automatically controls the glare from the headlights of the car behind you in nighttime or low light driving conditions. The sensor mounted in the mirror senses the light level around the vehicle, and automatically controls the headlight glare from vehicles behind you.

When the engine is running, the glare is automatically controlled by the sensor mounted in the rearview mirror.

Whenever the shift lever is shifted into R (Reverse), the mirror will automatically go to the brightest setting in order to improve the drivers view behind the vehicle.

⚠ CAUTION

When cleaning the mirror, use a paper towel or similar material dampened with glass cleaner. Do not spray glass cleaner directly on the mirror as that may cause the liquid cleaner to enter the mirror housing.

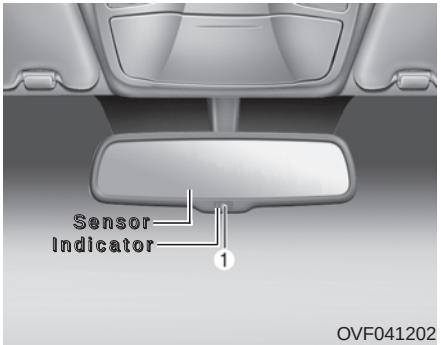

OVF041202

To operate the electric rearview mirror:

- Press the ON/OFF button (1) to turn the automatic dimming function on. The mirror indicator light will illuminate.

  Press the ON/OFF button to turn the automatic dimming function off. The mirror indicator light will turn off.
- The mirror defaults to the ON position whenever the ignition switch is turned on.

Outside rearview mirror

Be sure to adjust mirror angles before driving.

Your vehicle is equipped with both left-hand and right-hand outside rearview mirrors. The mirrors can be adjusted remotely with the remote switch. The mirror heads can be folded back to prevent damage during an automatic car wash or when passing in a narrow street.

⚠ WARNING - Rearview mirrors

- **The outside rearview mirror is convex. Objects seen in the mirror are closer than they appear.**
- **Use your interior rearview mirror or direct observation to determine the actual distance of following vehicles when changing lanes.**

⚠ CAUTION

Do not scrape ice off the mirror face; this may damage the surface of the glass. If ice should restrict movement of the mirror, do not force the mirror for adjustment. To remove ice, use a deicer spray, or a sponge or soft cloth with very warm water.

⚠ CAUTION

If the mirror is jammed with ice, do not adjust the mirror by force. Use an approved spray de-icer (not radiator antifreeze) to release the frozen mechanism or move the vehicle to a warm place and allow the ice to melt.

⚠ WARNING

Do not adjust or fold the outside rearview mirrors while the vehicle is moving. This could result in loss of control, and an accident which could cause death, serious injury or property damage.

OVF041035

Remote control

Electric type

The electric remote control mirror switch allows you to adjust the position of the left and right outside rearview mirrors. To adjust the position of either mirror, move the lever (1) to R (Right) or L (Left) to select the right side mirror or the left side mirror, then press a corresponding point on the mirror adjustment control to position the selected mirror up, down, left or right.

After adjustment, put the lever into neutral (center) position to prevent inadvertent adjustment.

⚠ CAUTION

- ***The mirrors stop moving when they reach the maximum adjusting angles, but the motor continues to operate while the switch is pressed. Do not press the switch longer than necessary, the motor may be damaged.***
- ***Do not attempt to adjust the outside rearview mirror by hand. Doing so may damage the parts.***

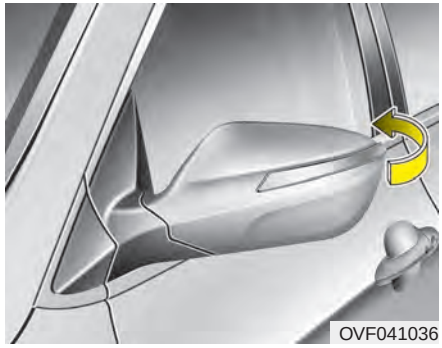
OVF041036

Folding the outside rearview mirror

Manual type

To fold outside rearview mirror, grasp the housing of mirror and then fold it toward the rear of the vehicle.

OVF041037

Electric type

To fold the outside rearview mirror, press the button.

To unfold it, press the button again.

⚠ **CAUTION**

The electric type outside rearview mirror operates even though the ignition switch is in the OFF position. However, to prevent unnecessary battery discharge, do not adjust the mirrors longer than necessary while the engine is not running.

⚠ **CAUTION**

In case it is an electric type outside rearview mirror, don't fold it by hand. It could cause motor failure.

INSTRUMENT CLUSTER

■ Type A

1. Tachometer
2. Speedometer
3. Engine coolant temperature gauge
4. Fuel gauge
5. Warning and indicator lights (if equipped)
6. Turn signal indicators
7. LCD display

■ Type B

* The actual cluster in the vehicle may differ from the illustration.
For more details, refer to "Gauges" in the following pages.

OVF041040/OVF041041

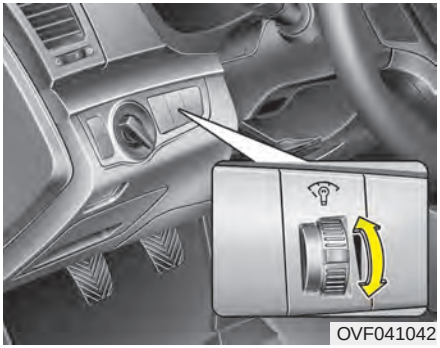
OVF041042

Instrument panel illumination

The instrument panel illumination intensity can be adjusted as follows:

- Ignition switch in the ON position
- Parking light or headlight on
- Pushing the control switch up or down

The illumination intensity is shown on the instrument cluster LCD display.

■ Type A

OVF041043

■ Type B

OVF041043L

■ Type C

OVF041043N

Gauges

Speedometer

The speedometer indicates the vehicle speed.

The speedometer is calibrated in kilometers per hour and/or miles per hour.

■ Gasoline Engine

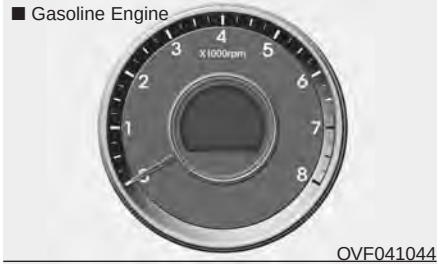

OVF041044

■ Diesel Engine

OVF041045

Tachometer

The tachometer indicates the engine speed in revolutions per minute (rpm).

Use the tachometer to select the correct shift points and to prevent lugging and/or over-revving the engine.

⚠ CAUTION

Do not operate the engine within the tachometer's RED ZONE. This may cause severe engine damage.

OVF041047L

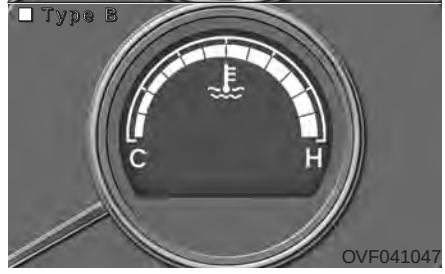

OVF041047

Engine coolant temperature gauge

This gauge shows the temperature of the engine coolant when the ignition switch is ON.

Do not continue driving with an overheated engine. If your vehicle overheats, refer to “If the engine overheats” in section 6.

⚠ CAUTION

If the gauge pointer moves beyond the normal range area toward the “130/H” position, it indicates overheating that may damage the engine.

⚠ WARNING

Never remove the radiator cap when the engine is hot. The engine coolant is under pressure and could cause severe burns. Wait until the engine is cool before adding coolant to the reservoir.

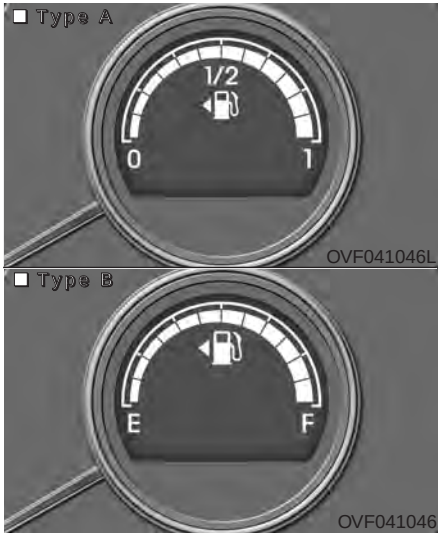

Fuel gauge

The fuel gauge indicates the approximate amount of fuel remaining in the fuel tank.

✻ NOTICE

- **The fuel tank capacity is given in section 8.**
- **The fuel gauge is supplemented by a low fuel warning light, which will illuminate when the fuel tank is nearly empty.**
- **On inclines or curves, the fuel gauge pointer may fluctuate or the low fuel warning light may come on earlier than usual due to the movement of fuel in the tank.**

⚠ WARNING - Fuel gauge

Running out of fuel can expose vehicle occupants to danger.

You must stop and obtain additional fuel as soon as possible after the warning light comes on or when the gauge indicator comes close to the "O/E (Empty)" level.

⚠ CAUTION

Avoid driving with a extremely low fuel level. Running out of fuel could cause the engine to misfire damaging the catalytic converter.

Outside temperature

The current outside temperature is displayed in 1°C (1°F) increments. The temperature range is between -40°C ~ 60°C (-40°F ~ 140°F).

- The outside temperature on the display may not change immediately like a general thermometer to prevent the driver from being inattentive.
- To convert from °C to °F or °F to °C press the DISP button for more than 5 seconds in the Distance to empty (DTE) mode.

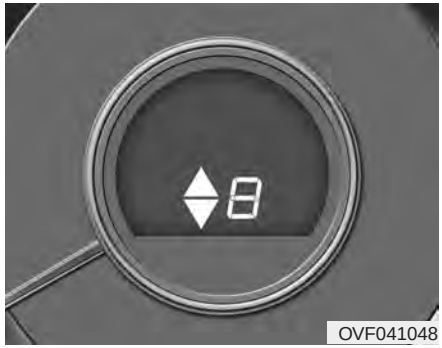
OVF041048

Manual transaxle shift indicator (if equipped)

This indicator informs you which gear is desired while driving to save fuel.

For example

▲3: Indicates that shifting up to the 3rd gear is desired (currently the shift lever is in the 2nd or 1st gear).

▼3: Indicates that shifting down to the 3rd gear is desired (currently the shift lever is in the 4th or 5th gear).

When the system is not working properly, the indicator is not displayed.

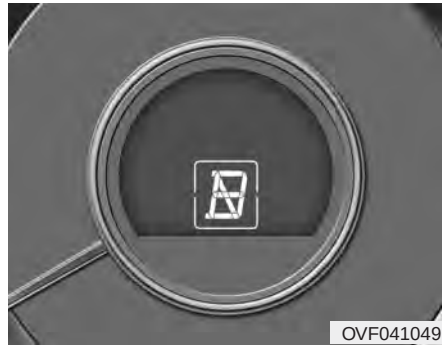
OVF041049

Automatic transaxle shift position indicator (if equipped)

The indicator displays which automatic transaxle shift lever is selected.

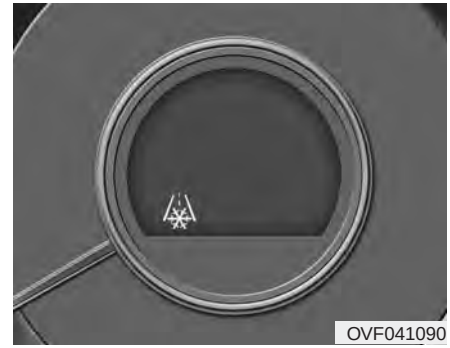
OVF041090

Icy road warning light (if equipped)

This warning light is to warn the driver the road may be icy when:

- Ignition ON
- Temperature range: approximately below 4°C (39.2°F).

The warning light will blink for 10 seconds and then illuminate. Also, the warning chime will sound.

✻ NOTICE

If the icy road warning light appears while driving, you should drive more attentively and safely refraining from over-speeding, rapid acceleration, sudden braking or sharp turning, etc.

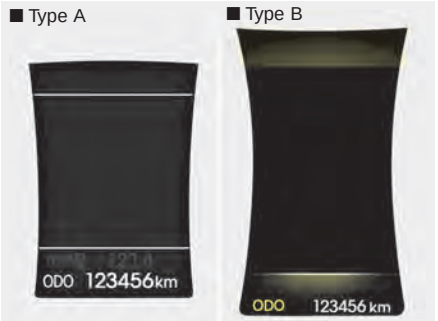

OVF041052

Odometer (km or mi.)

The odometer indicates the total distance the vehicle has been driven.

You will also find the odometer useful to determine when periodic maintenance should be performed.

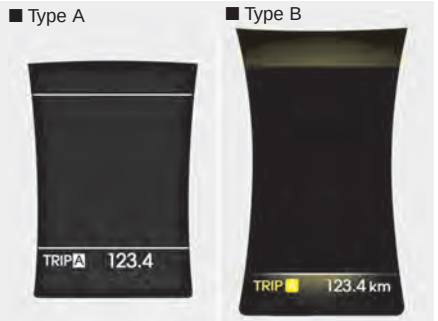

OVF041053

Tripmeter (km or mi.)

This mode indicates the distance of individual trips selected since the last tripmeter reset.

The meter's working range is from 0.0 to 9999.9 km (0.0 to 9999.9 miles).

Pressing the TRIP button for more than 1 second, clears the tripmeter to zero (0.0).

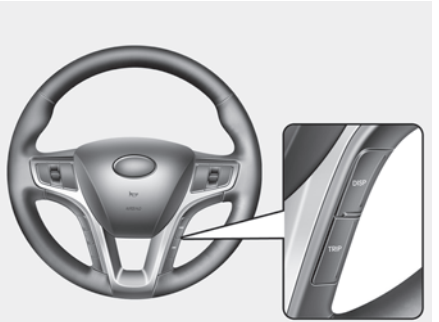

OVF041050

LCD display

The Trip computer, User setting, Warnings, etc. are displayed on the LCD display.

To change between groups, press the DISP button.

To change between modes in groups, press the DISP button.

Trip computer

The trip computer is a microcomputer-controlled driver information system that displays information related to driving when the ignition switch is in the ON position. All stored driving information (except odometer, distance to empty and instant fuel economy) resets if the battery is disconnected.

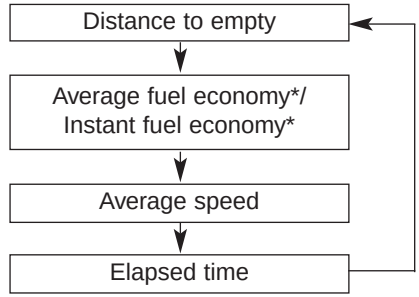

* if equipped

Press the DISP button to change between modes.

OVF041054

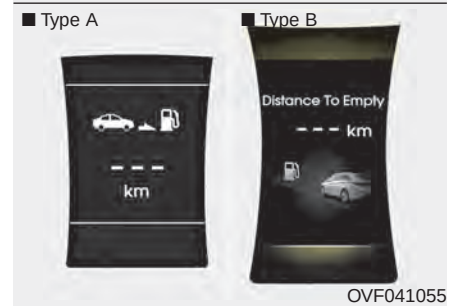

OVF041055

Distance to empty (km or mi.)

This mode indicates the estimated distance the vehicle can be driven with the remaining fuel. When the remaining distance is below 50 km (30 miles), “---” will be displayed.

The meter’s working range is from 50 to 999 km (30 to 999 miles).

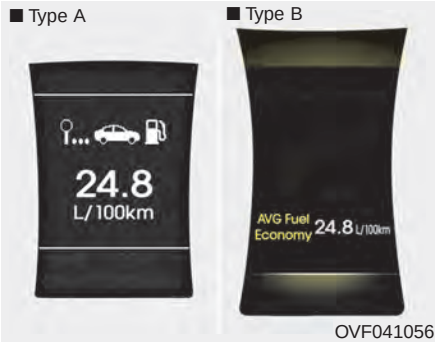

Average fuel economy (if equipped) (L/100 km or MPG)

This mode calculates the average fuel consumption from the total fuel used and the distance since the last average fuel economy reset. The total fuel used is calculated from the fuel consumption input. For an accurate calculation, drive more than 50 m (0.03 miles).

Pressing the DISP button for more than 1 second, when the average fuel consumption is displayed, clears the average fuel consumption to zero (--.-).

If the vehicle speed exceeds 1 km/h after refueling more than 6 *l*, the average fuel consumption will be cleared to zero (---).

You can activate or deactivate the feature, resetting the average fuel economy after refueling more than 6 *l*.

Refer to "User setting" in this section.

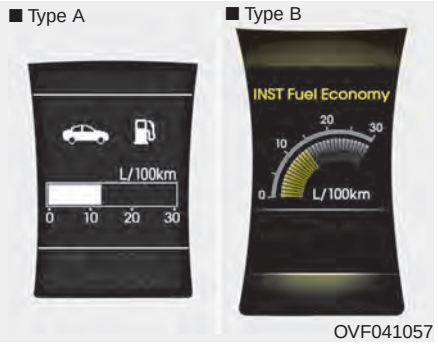

Instant fuel economy (if equipped) (L/100 km or MPG)

This mode calculates the instant fuel consumption during the last few seconds.

✻ NOTICE

- **If the vehicle is not on level ground or the battery power has been interrupted, the "Distance to empty" function may not operate correctly.**
  The trip computer may not register additional fuel if less than 6 liters (1.6 gallons) of fuel are added to the vehicle.
- **The fuel economy and distance to empty may vary significantly based on driving conditions, driving habits, and condition of the vehicle.**
- **The distance to empty is an estimate of the available driving distance. This value may differ from the actual driving distance.**

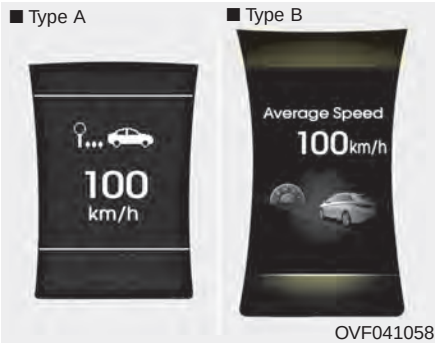

OVF041058

Average speed (km/h or MPH)

This mode calculates the average speed of the vehicle since the last average speed reset.

Even if the vehicle is not in motion, the average speed keeps going while the engine is running.

Pressing the DISP button for more than 1 second, when the average speed is displayed, clears the average speed to zero (---).

OVF041059

Elapsed time

This mode indicates the total time traveled since the last driving time reset.

Even if the vehicle is not in motion, the driving time keeps going while the engine is running.

The meter's working range is from 0:00~99:59.

Pressing the DISP button for more than 1 second, when the driving time is being displayed, clears the driving time to zero (0:00).

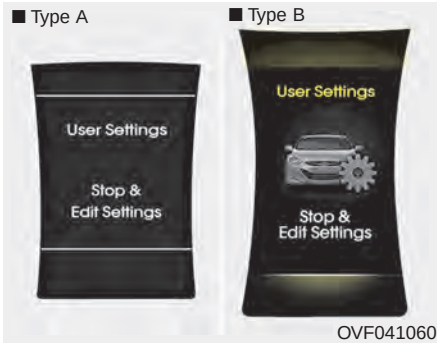

OVF041060

User Settings

1. Stop the vehicle with the ignition switch in the ON position or engine running.
2. Press the DISP button until the User setting is displayed.
3. With the User setting displayed, press the DISP button for 2 seconds.
4. You can change the item by pressing the DISP button and select an item by pressing the TRIP button.

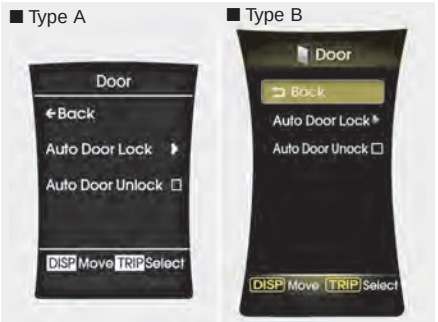

OVF041061

Door

• Auto Door Lock

Off - The auto door lock operation will be canceled.

Speed - All doors will be automatically locked when the vehicle speed exceeds 15km/h (9.3mph).

Shift Lever - All doors will be automatically locked if the shift lever is shifted from the P(Park) position to the R(Reverse), N(Neutral) or D(Drive) position. (for automatic transaxle shift lever)

• Auto Door Unlock

Off - The auto door unlock operation will be canceled.

Key Out - All doors will be automatically unlocked when the ignition key is removed from ignition switch (or smart key is in the OFF position).

Shift Lever - All doors will be automatically unlocked if the shift lever is shifted to the P(Park) position. (for automatic transaxle shift lever)

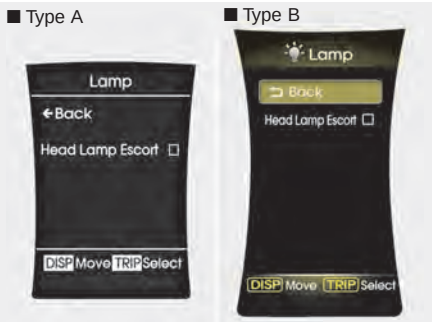

OVF041062

Lamp

• Headlamp Escort

If the Headlamp Escort is checked:

The Headlamp Escort and Headlamp Welcome function will be activated.

For details, refer to “Lighting” in section 4.

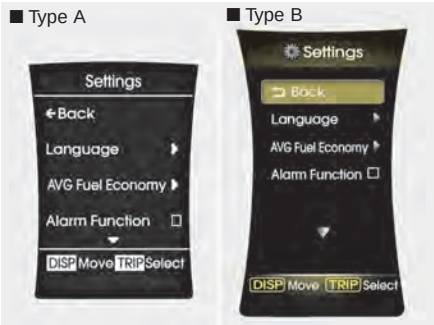

OVF041063

Settings

• Language

Choose a language you prefer within the LCD display.

• AVG Fuel Economy

Auto Reset - The average fuel economy will reset automatically when you drive after refueling.

• Alarm Function

If the Alarm Function is checked:

The Alarm function on the transmitter and smart key will be activated.

• Welcome Sound (for instrument cluster type B)

On - The Welcome Sound function will be activated.

Off - The Welcome Sound function will be inactivated.

• Maintenance

If the Maintenance is checked:

A message will appear to notify the driver maintenance service is required.

• Seat Easy Access (for Driver Position Memory System equipped vehicle)

If the Seat Easy Access is chcked:

The driver's seat will automatically move forward or rearward for the driver to enter or exit the vehicle comfortably.

OVF041064

LKAS Mode (for instrument cluster type B) (if equipped)

LKA - The Lane Keeping Assistance System (LKAS) will be activated.

LDW - The Lane Departure Warning System (LDWS) will be activated.

For more details, refer to LKAS in section 5.

LCD display informations

Clock (if equipped)

OVF041065

The time is displayed when the ignition switch is in the ON position.

• Time format mode

OVF041131/Q

To change the 12 hour format to 24 hour format:

1. Press the TIME button for more than 1second.
2. Press the DISP button to switch from 12H to 24H or 24H to 12H.
3. Press the TRIP button to select the time format you desire.

• Time adjust mode

OVF041131/Q

To change the time (hour/minute) :

1. Press the TRIP button when in the time format mode.
2. Press the DISP button to change the hour (advance by 1 hour).
3. Press the TRIP button to move the minute.
4. Press the DISP button to change the time by 1 minute (advance by 1 minute).
5. Press the TRIP button to move out of the Time mode.

Door/Trunk (Tailgate) open

OVF041066

OVF041067

The indicator appears to inform the driver which door or tailgate is opened.

Heated steering wheel ON/OFF

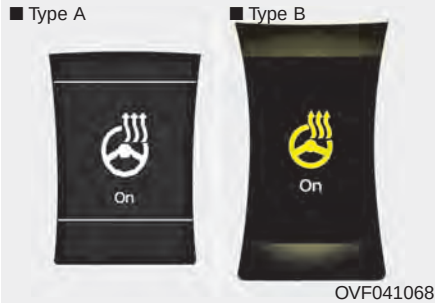

The indicator will appear when the heated steering wheel is turned on.

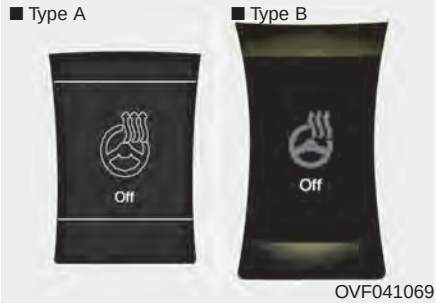

The indicator will appear when the heated steering wheel is turned off.

For more details, refer to “Steering wheel” in section 4.

Illumination intensity

The illumination intensity of the instrument panel is shown when adjusting it with the illumination control switch.

For more details, refer to “Instrument panel illumination” in section 4.

Parking assist warning

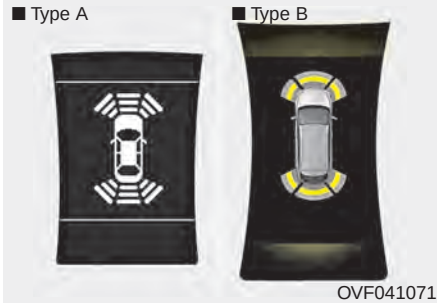

Displays the area an obstacle is detected while moving forward or rearward.

For more details, refer to “Parking assist system” in section 4.

Low tire pressure (if equipped)

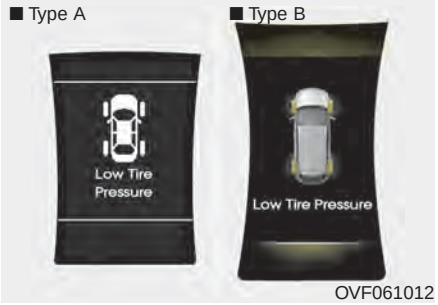

OVF061012

The low tire pressure position telltale will appear when one or more of your tires are under-inflated. It will indicate the corresponding under-inflated tire.

For more details, refer to “TPMS” in section 6.

Turn on fuse switch (mode switch)

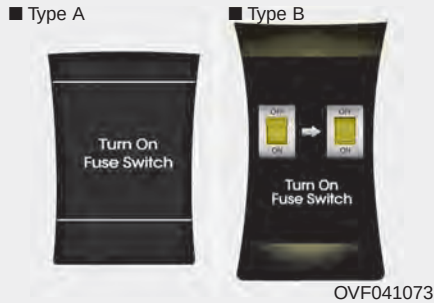

OVF041073

The notice appears to inform the driver to turn on the fuse switch in the instrument panel under the steering wheel.

For more details, refer to “Fuses” in section 7.

Check active air flap system

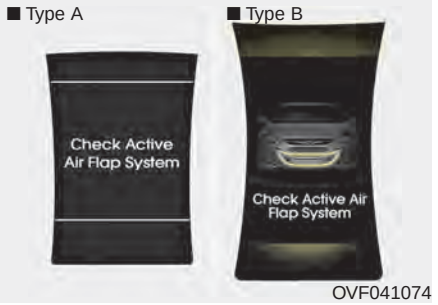

OVF041074

The notice appears to inform the driver when:

- The flaps malfunction
- The active air flap controller malfunctions
- The air flaps are not opened in a condition that has to be opened

When all of the above conditions are fixed, the warning will disappear.

✻ NOTICE

- **The above warning message may appear even though the active air flap has not malfunctioned. Please check for foreign matter or if the flap has frozen.**
- **In winter, the warning may not illuminate immediately.**

For vehicle's equipped with smart key system

Key is not in vehicle

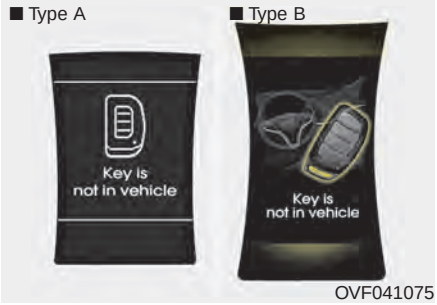

OVF041075

If the smart key is not in the vehicle and if any door is opened or closed with the engine start/stop button in the ACC, ON, or START position, the warning illuminates on the LCD display. Also, the chime sounds for 5 seconds when the smart key is not in the vehicle and the door is closed.

Always have the smart key with you.

Key is not detected

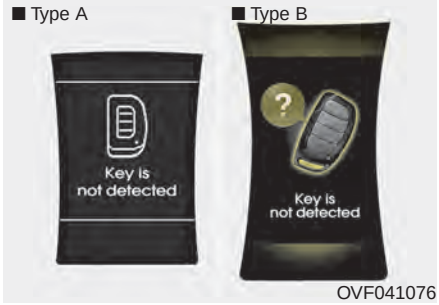

OVF041076

If the smart key is not in the vehicle or is not detected and you press the engine start/stop button, the warning illuminates on the LCD display for 10 seconds. Also, the immobilizer indicator blinks for 10 seconds.

Press start with smart key

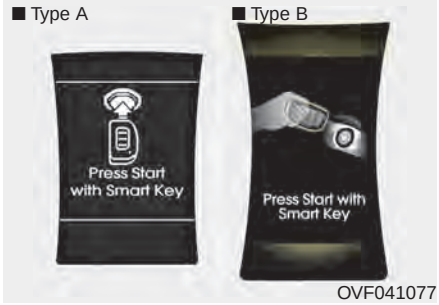

OVF041077

If you press the engine start/stop button while the warning "Key is not detected" illuminates the warning "Press the start button with smart key" illuminates for 10 seconds on the LCD display. Also, the immobilizer indicator blinks for 10 seconds.

Low key battery

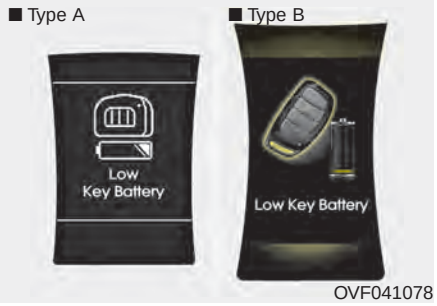

OVF041078

If the engine start/stop button changes to the OFF position when the smart key in the vehicle discharges, the warning illuminates on the LCD display for about 10 seconds. Also, the warning chime sounds once.

Replace the battery with a new one.

Press brake pedal to start engine (for automatic transaxle)

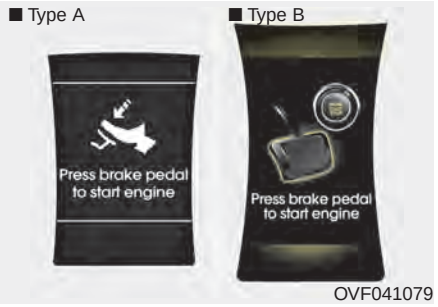

OVF041079

If the engine start/stop button changes to the ACC position twice by pressing the button repeatedly without depressing the brake pedal, the warning illuminates on the LCD display for about 10 seconds to indicate that you should depress the brake pedal to start the engine.

Press clutch pedal to start engine (for manual transaxle)

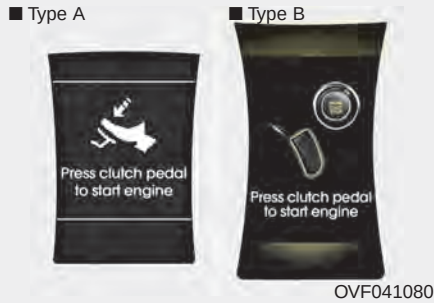

OVF041080

If the engine start/stop button turns to the ACC position twice by pressing the button repeatedly without depressing the clutch pedal, the warning illuminates on the LCD display for about 10 seconds to indicate that you should depress the clutch pedal to start the engine.

Shift to "P" position

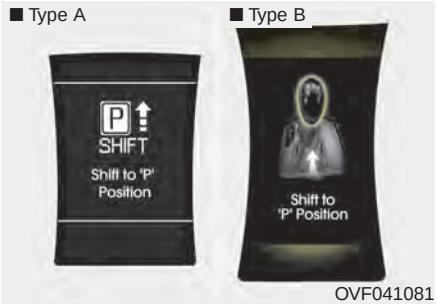

OVF041081

If you try to turn off the engine without the shift lever in the P (Park) position, the engine start/stop button will turn to the ACC position. If the button is pressed once more it will turn to the ON position. The warning illuminates on the LCD display for about 10 seconds to indicate that you should press the engine start/stop button with the shift lever in the P (Park) position to turn off the engine.

Also, the warning chime sounds for about 10 seconds. (if equipped)

Press start button again

OVF041082

If you can not operate the engine start/stop button when there is a problem with the engine start/stop button system, the warning illuminates for 10 seconds and the chime sounds continuously to indicate that you could start the engine by pressing the engine start/stop button once more.

The chime will stop if the engine start/stop button system works normally or the theft alarm system is armed.

If the warning illuminates each time you press the engine start/stop button, take your vehicle to an authorized HYUNDAI dealer and have the system checked.

Shift to "P" or "N" to start the engine

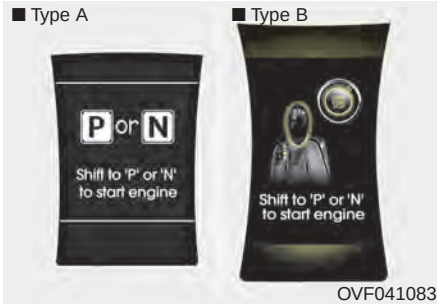

OVF041083

If you try to start the engine with the shift lever not in the P(Park) or N(Neutral) position, the warning illuminates for about 10 seconds on the LCD display.

You can also start the engine with the shift lever in the N(Neutral) position, but for your safety start the engine with the shift lever in the P(Park) position.

Press start button while turn steering (if equipped)

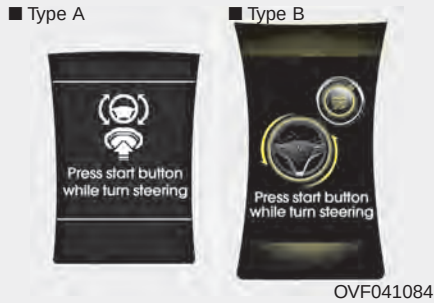

If the steering wheel does not unlock normally when the engine start/stop button is pressed, the warning illuminates for 10 seconds on the LCD display. Also, the warning chime sounds once and the engine start/stop button light blinks for 10 seconds.

When you are warned, press the engine start/stop button while turning the steering wheel right and left.

Check steering wheel lock system (if equipped)

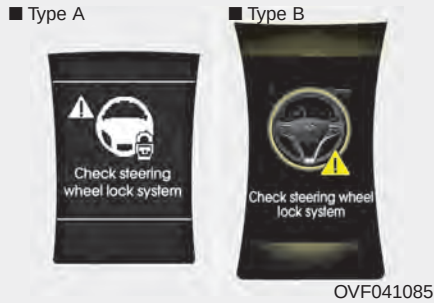

If the steering wheel does not lock normally when the engine start/stop button changes to the OFF position, the warning illuminates for 10 seconds on the LCD display. Also, the warning chime sounds for 3 seconds and the engine start/stop button light blinks for 10 seconds.

Check stop lamp fuse

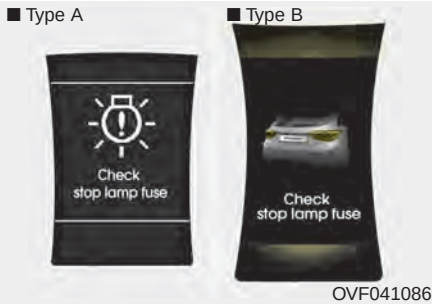

When the stop lamp fuse is disconnected, the warning illuminates for 10 seconds on the LCD display.

Replace the fuse with a new one. If that is not possible you can start the engine by pressing the engine start/stop button for 10 seconds in ACC.

Warnings and indicators (Instrument cluster)

All warning lights are checked by turning the ignition switch ON (do not start the engine). Any light that does not illuminate should be checked by an authorized HYUNDAI dealer.

After starting the engine, check to make sure that all warning lights are off. If any are still on, this indicates a situation that needs attention.

The following warning and indicators are introduced in the previous pages.

- Automatic transaxle shift lever indicator
- Manual transaxle shift indicator
- Icy road warning
- Door/tailgate open (LCD display)
- Heated steering wheel ON/OFF (LCD display)
- Parking assist warning (LCD display)
- Low tire pressure (LCD display)

Seat belt warning and chime light

As a reminder to the driver, the seat belt warning light will blink or illuminate for approximately 6 seconds each time you turn the ignition switch ON regardless of belt fastening.

For more details, refer to the “Seat belt” in section 3.

Air bag warning light

This warning light will illuminate for approximately 6 seconds each time you turn the ignition switch to the ON position.

This light also comes on when the SRS is not working properly. If the air bag warning light does not come on, or continuously remains on after operating for about 6 seconds when you turn the ignition switch to the ON position or started the engine, or if it comes on while driving, have the SRS inspected by an authorized HYUNDAI dealer.

.

Immobilizer indicator

Without smart key system

This indicator illuminates when the immobilizer key is inserted and turned to the ON position to start the engine.

At this time, you can start the engine. The indicator goes out after the engine is running.

If this indicator blinks when the ignition switch is in the ON position before starting the engine, have the system checked by an authorized HYUNDAI dealer.

With smart key system

If any of the following occurs in a vehicle equipped with the smart key, the immobilizer indicator illuminates, blinks or goes off.

- When the smart key is in the vehicle, if the engine start/stop button is in the ACC or ON position, the indicator will illuminate for approximately 30 seconds to indicate that you are able to start the engine. However, when the smart key is not in the vehicle, if the engine start/stop button is pressed, the indicator will blink for a few seconds to indicate that you are not be able to start the engine.
- If the indicator illuminates only for 2 seconds and goes out when the engine start/stop button is turned to ON position with the smart key in the vehicle, have the system checked by an authorized HYUNDAI dealer.
- When the battery is weak, if the engine start/stop button is pressed, the indicator will blink and you are not able to start the engine. However, you are able to start the engine by pressing the engine start/stop button directly with the smart key. Also, if the smart key system related parts have a problem, the indicator will blink.

Door ajar warning light

This warning light illuminates when a door is not closed securely.

Tailgate open warning light

This warning light illuminates when the tailgate is not closed securely.

Low fuel level warning

This warning light indicates the fuel tank is nearly empty. When it comes on, you should add fuel as soon as possible. Driving with the fuel level warning light on or with the fuel level below “O/E” can cause the engine to misfire and damage the catalytic converter (if equipped).

EPS (Electronic Power Steering) system warning light

This indicator light comes on after the ignition key is turned to the ON position and then it will go out.

This light also comes on when the EPS has some problems. If it comes on while driving, have your vehicle checked by an authorized HYUNDAI dealer.

Turn signal indicator lights

The blinking green arrows on the instrument panel show the direction indicated by the turn signals. If the arrow comes on but does not blink, blinks more rapidly than normal, or does not illuminate at all, a malfunction in the turn signal system is indicated. Your dealer should be consulted for repairs.

Light on indicator

The indicator illuminates when the tail lights or headlights are ON.

Low Beam Indicator Light (if equipped)

This indicator light illuminates when the headlights are on.

For vehicles equipped with instrument cluster type B, the indicator illuminates on the LCD display.

High beam indicator

This indicator illuminates when the headlights are on and in the high beam position or when the turn signal lever is pulled into the Flash-to-Pass position.

AFLS (Adaptive Front Lighting System) malfunction indicator (if equipped)

If the AFLS malfunction indicator illuminates, the AFLS is not working properly. Drive to the nearest safe location and restart the engine. If the indicator continuously remains on, take your vehicle to an authorized HYUNDAI dealer and have the system checked.

Front fog light indicator (if equipped)

The indicator illuminates when the front fog lights are ON.

Rear fog light indicator (if equipped)

This indicator illuminates when the rear fog lights are ON.

Low washer fluid level warning indicator

This warning light indicates the washer fluid reservoir is nearly empty. Refill the washer fluid as soon as possible.

Parking brake & brake fluid warning

Parking brake warning

This light illuminates when the parking brake is applied with the ignition switch in the START or ON position. The warning light should go off when the parking brake is released.

Low brake fluid level warning

If the warning light remains on, it may indicate that the brake fluid level in the reservoir is low.

If the warning light remains on:

1. Drive carefully to the nearest safe location and stop your vehicle.
2. With the engine stopped, check the brake fluid level immediately and add fluid as required. Then check all brake components for fluid leaks.
3. Do not drive the vehicle if leaks are found, the warning light remains on or the brakes do not operate properly. Have it towed to any authorized HYUNDAI dealer for a brake system inspection and necessary repairs.

Your vehicle is equipped with dual-diagonal braking systems. This means you still have braking on two wheels even if one of the dual systems should fail. With only one of the dual systems working, more than normal pedal travel and greater pedal pressure are required to stop the car. Also, the car will not stop in as short a distance with only a portion of the brake system working. If the brakes fail while you are driving, shift to a lower gear for additional engine braking and stop the car as soon as it is safe to do so.

To check bulb operation, check whether the parking brake and brake fluid warning light illuminates when the ignition switch is in the ON position.

⚠ WARNING

Driving the vehicle with a warning light on is dangerous. If the brake warning light remains on, have the brakes checked and repaired immediately by an authorized HYUNDAI dealer.

EPB (Electric Parking Brake) malfunction indicator

The EPB malfunction indicator will illuminate when the ignition switch is turned ON, but should go off after approximately 3 seconds. If the warning light does not come on, or continuously remains on take your vehicle to an authorized HYUNDAI dealer and have the system checked.

Also, the EPB malfunction indicator may illuminate when the ESP indicator comes on to indicate that the ESP is not working properly, but if this occurs, it does not indicate the EPB has malfunctioned.

For more details, refer to "EPB" in section 5.

AUTO HOLD indicator (if equipped)

If you press the AUTO HOLD switch, the AUTO HOLD indicator on the cluster comes on white. And when you stop the vehicle completely by pressing the brake pedal, the indicator changes from white to green.

If the AUTO HOLD malfunction indicator lights up yellow, the AUTO HOLD is not working properly. Take your vehicle to an authorized HYUNDAI dealer and have the system checked.

For more details, refer to “AUTO HOLD” in section 5.

Anti-lock brake system (ABS) warning light

This light illuminates if the ignition switch is turned ON and goes off in approximately 3 seconds if the system is operating normally.

If the ABS warning light remains on, comes on while driving, or does not come on when the ignition switch is turned to the ON position, this indicates that there may be a problem with the ABS.

If this occurs, have your vehicle checked by an authorized HYUNDAI dealer as soon as possible. The normal braking system will still be operational, but without the assistance of the anti-lock brake system.

Electronic brake force distribution (EBD) system warning light

If two warning lights illuminate at the same time while driving, your vehicle’s ABS and EBD system may have malfunctioned.

In this case, your ABS and regular brake system may not work normally. Have the vehicle checked by an authorized HYUNDAI dealer as soon as possible.

⚠ WARNING

If both ABS and Brake warning lights are on and stay on, your vehicle’s brake system will not work normally. So you may experience an unexpected and dangerous situation during sudden braking. In this case, avoid high speed driving and abrupt braking.

Have your vehicle checked by an authorized HYUNDAI dealer as soon as possible.

✻ NOTICE

If the ABS warning light or EBD warning light is on and stays on, the speedometer or odometer/tripmeter may not work. Also, the EPS warning light may illuminate and the steering effort may increase or decrease. In this case, have your vehicle checked by an authorized HYUNDAI dealer as soon as possible.

ESP (Electronic Stability Program) indicator

The ESP indicator will illuminate when the ignition switch is turned ON, but should go off after approximately 3 seconds. When the ESP is on, it monitors the driving conditions. Under normal driving conditions, the ESP indicator will remain off. When a slippery or low traction condition is encountered, the ESP will operate, and the ESP indicator will blink to indicate the ESP is operating.

But, if the ESP system malfunctions the indicator illuminates and stays on. Take your vehicle to an authorized HYUNDAI dealer and have the system checked.

ESP OFF indicator

The ESP OFF indicator will illuminate when the ignition switch is turned ON, but should go off after approximately 3 seconds. To switch to ESP OFF mode, press the ESP OFF button. The ESP OFF indicator will illuminate indicating the ESP is deactivated.

Auto stop indicator (if equipped)

This indicator will illuminate when the engine enters the Idle Stop mode of the ISG (Idle Stop and Go) system.

When the automatic starting occurrs, the auto stop indicator on the cluster will blink for 5 seconds.

For more details, refer to the ISG (Idle Stop and Go) system in section 5.

For vehicles equipped with instrument cluster type B, the indicator illuminates on the LCD display.

✻ NOTICE

When the engine automatically starts by the ISG system, some warning lights (ABS, ESP, ESP OFF, EPS or Parking brake warning light) may turn on for a few seconds.
This happens because of low battery voltage. It does not mean the system is malfunctioning.

SPORT indicator (if equipped)

The SPORT indicator light will illuminate when the SPORT button is pressed. The indicator light turns off when the SPORT button is pressed again.

For more details, refer to "Automatic transaxle" in section 5.

Cruise indicator (if equipped)

CRUISE indicator

The indicator illuminates when the cruise control system is enabled by pressing /CRUISE button on the steering wheel. The indicator goes off when the /CRUISE button is pressed again to deactivate the system.

Cruise SET indicator

The indicator illuminates when the cruise control switch (-SET or RES+) is pressed.

The cruise SET indicator does not illuminate when the cruise control switch (CANCEL) is pushed or the system is disengaged.

For more details, refer to "Cruise control system" in section 5.

The cruise indicators illuminates on the LCD display.

Speed limiter indicator (if equipped)

The indicator illuminates when the speed limit control system is enabled by pressing button on the steering wheel. The indicator goes off when the button is pressed again to deactivate the system.

If there is a problem with the speed limit control system, the “OFF” indicator will blink.

If this occurs, have the system checked by an authorized HYUNDAI dealer as soon as possible.

For more details, refer to “Speed limit control system” in section 5.

The speed limiter indicators illuminates on the LCD display.

LKAS (Lane Keeping Assistant System) indicator (if equipped)

The LKAS indicator will illuminate when you turn the lane keeping assistant system on by pressing the LKAS button.

If there is a problem with the system, the yellow LKAS indicator will illuminate.

For more details, refer to "LKAS" in section 5.

TPMS (Tire Pressure Monitoring System) indicator (if equipped)

Low tire pressure telltale/ TPMS malfunction indicator

The low tire pressure telltale comes on for 3 seconds after the ignition switch is turned to the ON position.

The low tire pressure and position telltales illuminates when one or more of your tires is significantly underinflated.

The TPMS malfunction indicator will illuminate after it blinks for approximately one minute when there is a problem with the Tire Pressure Monitoring System.

If this occurs, have the system checked by an authorized HYUNDAI dealer as soon as possible.

For more details, refer to the TPMS in section 6.

The low tire pressure position telltale illuminates on the LCD display.

⚠ WARNING - Safe stopping

- **The TPMS cannot alert you to severe and sudden tire damage caused by external factors.**
- **If you notice any vehicle instability, immediately take your foot off the accelerator pedal, apply the brakes gradually and with light force, and slowly move to a safe position off the road.**

Engine oil pressure warning

This warning light indicates the engine oil pressure is low.

If the warning light illuminates while driving:

1. Drive safely to the side of the road and stop.
2. With the engine off, check the engine oil level. If the level is low, add oil as required.

If the warning light remains on after adding oil or if oil is not available, call an authorized HYUNDAI dealer.

⚠ CAUTION

If the engine does not stop immediately after the engine oil pressure warning light is illuminated, severe damage could result.

⚠ CAUTION

If the oil pressure warning light stays on while the engine is running, serious engine damage may result. The oil pressure warning light comes on whenever there is insufficient oil pressure. In normal operation, it should come on when the ignition switch is turned on, then go out when the engine is started. If the oil pressure warning light stays on while the engine is running, there is a serious malfunction.

If this happens, stop the car as soon as it is safe to do so, turn off the engine and check the oil level. If the oil level is low, fill the engine oil to the proper level and start the engine again. If the light stays on with the engine running, turn the engine off immediately. In any instance where the oil light stays on when the engine is running, the engine should be checked by an authorized HYUNDAI dealer before the car is driven again.

Engine oil level warning light (if equipped)

The engine oil level warning light illuminates when the engine oil level should be checked.

If the warning light comes on, check the engine oil level as soon as possible and add engine oil as required.

Slowly pour the recommended oil little by little into a funnel. (Oil refill capacity : approximately 0.6 ~ 1.0 *l*)

Use only the specified engine oil. (Refer to "Recommended lubricants and capacities" in section 8.)

Do not overfill the engine oil to ensure the oil level is not above F mark on the dipstick.

For vehicles equipped with instrument cluster type B, the indicator illuminates on the LCD display.

✻ NOTICE

- **If you travel approximately 50 km~100 km after the engine warms up, after adding the engine oil, the warning light will go off.**
- **Cycle the ignition from OFF to ON 3 times within 10 seconds, the warning light will go off immediately. However, when you turn off the warning light without adding the engine oil, the light will come on again after traveling approximately 50 km ~ 100 km after the engine warms up.**

⚠ CAUTION

If the light comes on continuously after adding the engine oil and traveling approximately 50 km~100 km after the engine warms up, take your vehicle to your nearest authorized HYUNDAI dealer and have the system checked.

Even if this light doesn't come on after the engine has started, the engine oil should be checked and supplied periodically.

Malfunction indicator lamp (MIL) (check engine light)

This indicator light is part of the Engine Control System which monitors various emission control system components. If this light illuminates while driving, it indicates that a potential problem has been detected somewhere in the emission control system.

This light will also illuminate when the ignition switch is turned to the ON position, and will go out in a few seconds after the engine is started. If it illuminates while driving, or does not illuminate when the ignition key is turned to the ON position, take your vehicle to your nearest authorized HYUNDAI dealer and have the system checked.

Generally, your vehicle will continue to be drivable, but have the system checked by an authorized HYUNDAI dealer promptly.

⚠ CAUTION

Prolonged driving with the Emission Control System Malfunction Indicator Light illuminated may cause damage to the emission control systems which could effect drivability and/or fuel economy.

⚠ CAUTION - Gasoline engine

If the Emission Control System Malfunction Indicator Light illuminates, potential catalytic converter damage is possible which could result in loss of engine power. Have the Engine Control System inspected as soon as possible by an authorized HYUNDAI dealer.

⚠ CAUTION - Diesel engine (if equipped with DPF)

When the malfunction indicator light blinks, it may stop blinking after driving the vehicle at more than 60km/h (37 mph) or at more than second gear with 1500 ~ 2000 engine rpm for a certain time (for about 25 minutes).

If the malfunction indicator light continues to blink in spite of the procedure, please visit an authorized HYUNDAI dealer and then check the DPF system.

If you continue to drive with the malfunction indicator light blinking for a long time, the DPF system can be damaged and fuel consumption can worsen.

⚠ CAUTION - Diesel engine

If the Emission Control System Malfunction Indicator Light blinks, some error related to the injection quantity adjustment occurs which could result in loss of engine power, combustion noise and poor emission. Have the Engine Control System inspected as soon as possible by an authorized HYUNDAI dealer.

Engine coolant temperature warning light (if equipped)

The warning light illuminates if the temperature of the engine coolant is above 120±3°C (248±5.4°F).

Do not continue driving with an overheated engine. If your vehicle overheats, refer to “Overheating” in section 6.

✻ NOTICE

If the engine coolant temperature warning light illuminates, it indicates overheating that may damage the engine.

Glow indicator (Diesel engine)

The indicator light illuminates when the ignition switch is placed at the ON position. The engine can be started after the preheat indicator light goes off. The illuminating time varies with the water temperature, air temperature and battery condition.

✻ NOTICE

If the engine does not start within 10 seconds after the preheating is completed, turn the ignition key once more to the LOCK/OFF position for 10 seconds, and then to the ON position, in order to preheat again.

⚠ CAUTION

If the preheat indicator light continues to illuminate or flash on and off after the engine has warmed up or while driving, have the system checked by an authorized HYUNDAI dealer as soon as possible.

Fuel filter warning light (Diesel engine)

This warning light illuminates for 3 seconds after the ignition switch is set to the ON position and then it will go out. If it lights up while the engine is running, it indicates that water has accumulated inside the fuel filter. If this happens, remove the water from the fuel filter.

For more details, refer to “Fuel filter” in section 7.

⚠ CAUTION

When the fuel filter warning light illuminates, engine power (vehicle speed & idle speed) may decrease. If you keep driving with the warning light on, you can damage your vehicle's engine parts and injection system of the Common Rail. If this occurs, have your vehicle checked by an authorized HYUNDAI dealer as soon as possible.

Charging system warning

This warning light indicates a malfunction of either the generator or electrical charging system.

If the warning light comes on while the vehicle is in motion:

1. Drive to the nearest safe location.
2. With the engine off, check the generator drive belt for looseness or breakage.
3. If the belt is adjusted properly, a problem exists somewhere in the electrical charging system. Have an authorized HYUNDAI dealer correct the problem as soon as possible.

Overspeed warning (if equipped)

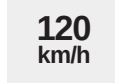

Overspeed warning light

If you drive with the speed of 120 km/h or more, the overspeed warning light will blink. This is to prevent you from driving your vehicle with overspeed.

Overspeed warning chime (if equipped)

If you drive with the speed of 120 km/h or more, the overspeed warning chime will sound for about 5 seconds. This is to prevent you from driving your vehicle with overspeed.

PARKING ASSIST SYSTEM (IF EQUIPPED)

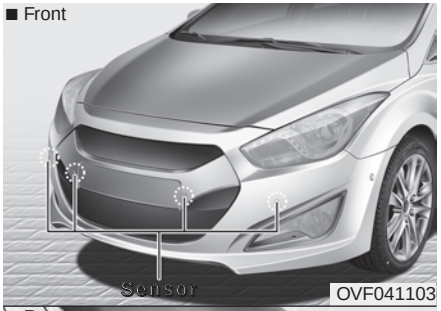

OVF041103

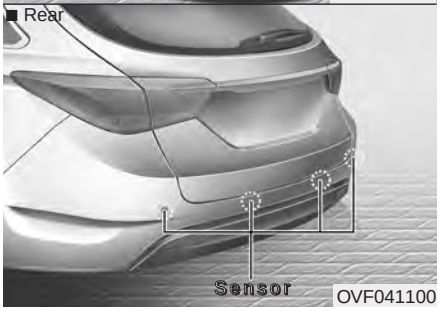

OVF041100

The parking assist system assists the driver during movement of the vehicle by chiming if any object is sensed within the distance of 60 cm (24 in.) in front and 100 cm (39 in.) behind the vehicle. This system is a supplemental system and it is not intended to nor does it replace the need for extreme care and attention of the driver.

The sensing range and objects detectable by the sensors are limited. Whenever moving pay as much attention to what is in front and behind of you as you would in a vehicle without a parking assist system.

⚠ WARNING

The parking assist system should only be considered as a supplementary function. The driver must check the front and rear view. The operational function of the parking assist system can be affected by many factors and conditions of the surroundings, so the responsibility rests always with the driver.

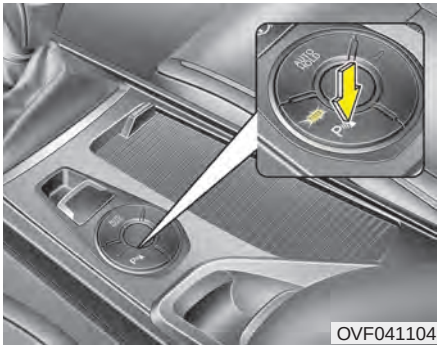
OVF041104

Operation of the parking assist system

Operating condition

- This system activates when the parking assist button is pressed with the ignition switch ON.
- The parking assist button turns on automatically and activates the parking assist system when you shift the gear to the R (Reverse) position. It will turn off automatically when you shift out of R (Reverse) and drive above 10 km/h (6.2 mph).
- The sensing distance while backing up is approximately 100 cm (39 in.) when you are driving less than 10 km/h (6.2 mph).

- The sensing distance while moving forward is approximately 60 cm (24 in.) when you are driving less than 10 km/h (6.2 mph).
- When more than two objects are sensed at the same time, the closest one will be recognized first.

✻ NOTICE

It may not operate if it's distance from the object is already less than approximately 25 cm when the system is ON.

Type of warning indicator and sound

: with Warning sound
: without Warning sound

Distance from object		Warning indicator		Warning sound
		When driving forward	When driving rearward	
100cm~61cm	Front		-	-
	Rear	-		Buzzer beeps intermittently
60cm~31cm	Front			Buzzer beeps frequently
	Rear	-		Buzzer beeps frequently
30cm	Front			Buzzer sounds continuously
	Rear	-		Buzzer sounds continuously

✻ NOTICE

- **The actual warning sound and indicator may differ from the illustration according to objects or sensor status.**
- **Do not wash the vehicle's sensor with high pressure water.**

⚠ **CAUTION**

- ***This system can only sense objects within the range and location of the sensors;***

  It can not detect objects in other areas where sensors are not installed. Also, small or slim objects, such as poles or objects located between sensors may not be detected by the sensors.

  Always visually check behind the vehicle when backing up.
- ***Be sure to inform any drivers of the vehicle that may be unfamiliar with the system regarding the systems capabilities and limitations.***

Non-operational conditions of parking assist system

Parking assist system may not operate normally when:

1. Moisture is frozen to the sensor. (It will operate normally when moisture melts.)
2. Sensor is covered with foreign matter, such as snow or water, or the sensor cover is blocked. (It will operate normally when the material is removed or the sensor is no longer blocked.)
3. Sensor is stained with foreign matter such as snow or water. (Sensing range will return to normal when removed.)
4. The parking assist button is off.

There is a possibility of parking assist system malfunction when:

1. Driving on uneven road surfaces such as unpaved roads, gravel, bumps, or gradient.
2. Objects generating excessive noise such as vehicle horns, loud motorcycle engines, or truck air brakes can interfere with the sensor.
3. Heavy rain or water spray.
4. Wireless transmitters or mobile phones present near the sensor.
5. Sensor is covered with snow.

Detecting range may decrease when:

1. Outside air temperature is extremely hot or cold.
2. Undetectable objects smaller than 1 m and narrower than 14 cm in diameter.

The following objects may not be recognized by the sensor:

1. Sharp or slim objects such as ropes, chains or small poles.
2. Objects, which tend to absorb sensor frequency such as clothes, spongy material or snow.

✻ NOTICE

1. The warning may not sound sequentially depending on the speed and shapes of the objects detected.
2. The parking assist system may malfunction if the vehicle bumper height or sensor installation has been modified. Any non-factory installed equipment or accessories may also interfere with the sensor performance.
3. Sensor may not recognize objects less than 30 cm from the sensor, or it may sense an incorrect distance. Use with caution.
4. When the sensor is frozen or stained with snow or water, the sensor may be inoperative until the stains are removed using a soft cloth.
5. Do not push, scratch or strike the sensor with any hard objects that could damage the surface of the sensor. Sensor damage could occur.

✻ NOTICE

This system can only sense objects within the range and location of the sensors, it can not detect objects in other areas where sensors are not installed. Also, small or slim objects, or objects located between sensors may not be detected.
Always visually check in front and behind the vehicle when driving.
Be sure to inform any drivers in the vehicle that may be unfamiliar with the system regarding the systems capabilities and limitations.

⚠ WARNING

Pay close attention when the vehicle is driven close to objects on the road, particularly pedestrians, and especially children. Be aware that some objects may not be detected by the sensors, due to the objects distance, size or material, all of which can limit the effectiveness of the sensor. Always perform a visual inspection to make sure the vehicle is clear of all obstructions before moving the vehicle in any direction.

Self-diagnosis

When you shift the gear to the R (Reverse) position and if one or more of the below occurs you may have a malfunction in the rear parking assist system.

- You don't hear an audible warning sound or if the buzzer sounds intermittently.
- is displayed. (if equipped)
  (blinks)

If this occurs, have your vehicle checked by an authorized HYUNDAI dealer as soon as possible.

⚠ WARNING

Your new vehicle warranty does not cover any accidents or damage to the vehicle or injuries to its occupants related to a parking assist system. Always drive safely and cautiously.

SMART PARKING ASSIST SYSTEM (SPAS) (IF EQUIPPED)

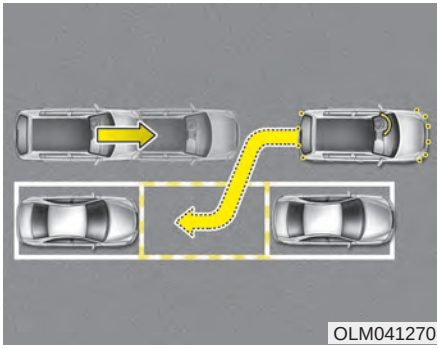

The Smart Parking Assist System helps drivers park their vehicle by using sensors to measure parallel parking spaces, control the steering wheel to semi-automatically park the car and provide instruction on the LCD display to help through parking.

✻ NOTICE

- The vehicle will not stop for pedestrians or objects that may be in its path, so the driver must monitor the maneuver.
- Use the system only in parking lots and places used for parking.
- The system does not work if there is no car parked in front of the parking space you are planning to park or if it is a diagonal parking space.
- After parking your vehicle using the system, the vehicle may not be parked at the exact spot you have wished. For example, the space between your vehicle and wall may not be the distance you have desired.
- Deactivate the system and park your vehicle manually, when the situation requires parking manually.
- The Parking Assist System's front and rear warning sound activates when the Smart Parking Assist System is activated.
- After searching for a parking space is completed, the Smart Parking Assist System will be canceled if the Parking Assist System is cancelled by pressing the button to the OFF position.

⚠ WARNING

- The Smart Parking Assist System should only be considered as a supplementary function. The driver must check the front and rear view for objects. The operational function of the Smart Parking Assist System can be affected by many factors and conditions of the surroundings, so the responsibility rests always with the driver.
- The system may not operate normally if the vehicle needs wheel alignment adjustment. Have the vehicle checked by an authorized HYUNDAI dealer.
- If you use a different tire or wheel size rather than the size recommended by the HYUNDAI dealer, the system may not work properly. Always use the same size tire and wheel.

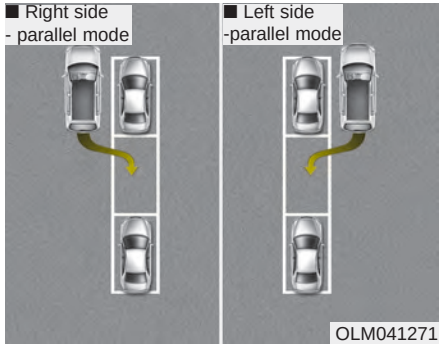

Operating condition

The system will help park the vehicle in the middle or back of a parked vehicle. Use the system when all the below conditions are met.

- When the parking space is a straight line
- When parallel parking is required
- When there is a parked vehicle
- When there is enough space to move the vehicle

Non-operating condition

Never use the Smart Parking Assist System in the below conditions.

- Curved parking space
- Inclined roads
- A vehicle loaded with longer or wider cargo compared to the vehicle
- Diagonal parking space
- Parking space with trash, grass or barriers
- Heavy snow or rain
- A pole close to the parking line
- Bumpy roads
- A vehicle equipped with a snow chain or spare tire
- Tire pressure lower or higher than the standard tire pressure
- A trailer connected to the vehicle
- Slippery or uneven road
- Big vehicles such as buses or trucks parked
- Sensor covered with foreign matter, such as snow or water
- Moisture frozen on the sensor.
- A motorcycle or bicycle parked
- A trash can or obstacle near
- Heavy wind
- Wheel changed to an unauthorized size
- A problem with the wheel alignment
- Next to a garden or bush

⚠ WARNING

Do not use the Smart Parking Assist System in the following conditions for unexpected results may occur and cause a serious accident.

1. Parking on inclines

The driver must apply the accelerator and brake pedal when parking on inclines. If the driver is unfamiliar with applying the accelerator and brake pedal, a car accident may occur.

(Continued)

(Continued)

2. Parking in snow

Snow may interfere with sensor operation or the system may cancel if the road is slippery while parking. Also, if the driver is unfamiliar with applying the accelerator and brake pedal, a car accident may occur.

(Continued)

(Continued)

3. Parking in narrow space

The system may not search for parking spaces if the space is too narrow. Even if it operates always be careful.

(Continued)

(Continued)
4. Parking diagonal

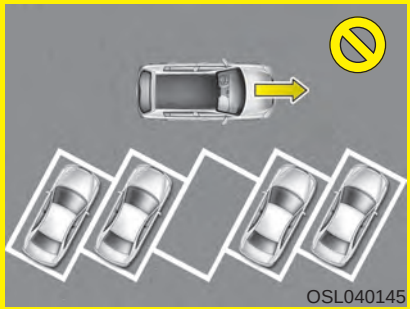

The system is a supplemental for parallel parking. Diagonal line parking is not available. Even if the vehicle is able to enter the space, do not operate the Smart Parking Assist System. The system will attempt parallel parking.

(Continued)

(Continued)
5. Parking in uneven road

Parking in uneven roads, the driver needs to properly apply the pedal (clutch, accelerator or brake). If not, the system may cancel when the vehicle slips or an accident may occur.

(Continued)

(Continued)
6. Parking behind a truck

An accident may occur when parking behind a vehicle higher than yours. For example, bus, truck, etc.

(Continued)

(Continued)

7. Obstacle in parking space

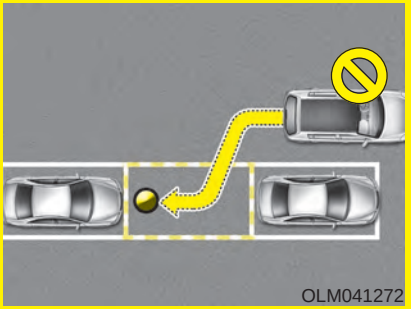

The system may search for a parking space even though an obstacle is in the parking space. An accident may occur if you continue to park the vehicle with the system.

Do not solely rely on the Smart Parking Assist System.

How the system works

1. Activate the Smart Parking Assist System
2. Select parking assist mode
3. Search for parking space (slowly move forward.)
4. Search complete (automatic search by sensor.)
5. Steering wheel control
   (1) Shift according to the instruction on the LCD display.
   (2) Drive slowly with the brake pedal applied.
6. Smart Parking Assist System complete
7. If necessary, manually adjust position of vehicle.

✻ NOTICE

- **Before activating the system check if the conditions are possible to use the system.**
- **For your safety, always apply the brake pedal except for when driving.**

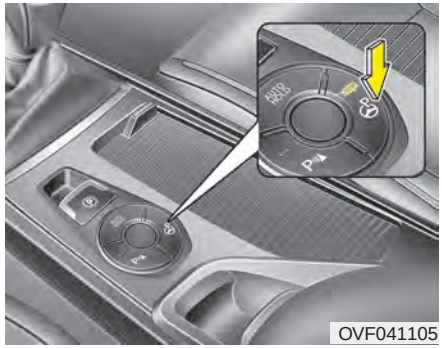

OVF041105

1. Activate Smart Parking Assist System

- Press the Smart Parking Assist System button (the button indicator will illuminate).
- The Parking Assist System will be activated (the button indicator will illuminate).

  A warning sound will be heard if an obstacle is detected.
- Press the Smart Parking Assist System button again for more than 2 seconds to turn off the system.
- The Smart Parking Assist System defaults to the OFF position whenever the ignition switch is turned on.

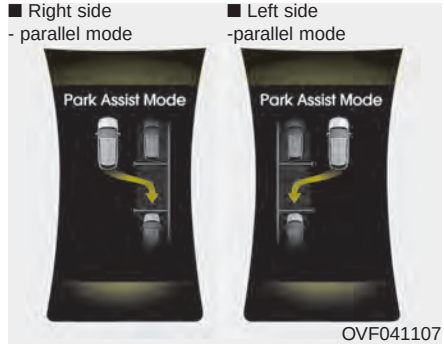

OVF041107

2. Select parking assist mode

- Select the parking assist mode by pressing the Smart Parking Assist System button with the shift lever in N (Neutral) or D(Drive) and the brake pedal depressed.
- The right side parallel mode is selected automatically when the Smart Parking Assist System is activated.
- To select the left side parallel mode press the Smart Parking Assist System button once more.
- If the button is pressed again, the system will turn off.

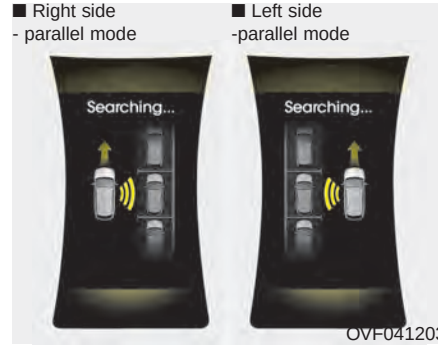

OVF041203

3. Search for parking space

- Slowly drive forward maintaining the distance of approximately 50cm ~ 150cm (19.6in.~59.0in.) with the parked vehicles. The side sensors will search for a parking space.
- If the vehicle speed is over 30km/h (18.6mph), a message will appear to notify to reduce speed.
- If the vehicle speed is over 40km/h (24.8mph), the system will cancel.

✻ NOTICE

- Turn on the hazard warning flasher if it is crowded with other vehicles.
- If the parking lot is small, slowly drive more nearer to the parking space.
- The search for a parking space will be completed only when there is enough space for the vehicle to move to park.

✻ NOTICE

- When searching for a parking space, the system may not be able to find a parking space if there is no vehicle parked, a parking space is available after driving by or a parking space is available before driving by.
- The system may not operate normally in the following conditions:
  (1) When the sensors are frozen
  (2) When the sensors are dirty
  (3) When it snows or rains heavily
  (4) When a pillar or object is near

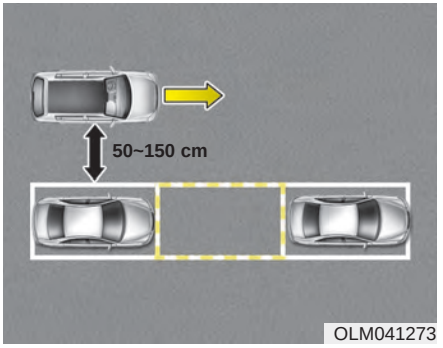

OLM041273

✻ NOTICE

Slowly drive forward maintaining the distance of approximately 50cm ~ 150cm (19.6in.~59.0in.) with the parked vehicles. If not within the distance, the system may not be able to search for a parking space.

⚠ CAUTION

After searching for a parking space is completed, continue using the system after checking the surrounding area.

OVF041117

⚠ CAUTION

While using the Smart Parking Assist System if the Auto Hold activates the above message will appear. Turn the Auto Hold operation off. When you cancel the Auto Hold operation by depressing the accelerator pedal, always check the surrounding area near your vehicle.

■ Right side
- parallel mode

■ Left side
-parallel mode

OVF041109

4. Search complete

While driving forward to search for a parking space, the above message will appear with a beep sound if the search is complete. Stop the vehicle and shift to the R (Reverse) position.

⚠ CAUTION

- ***Always drive slowly with the brake pedal applied.***
- ***If the parking space is to small the system may be cancelled at the Steering wheel control stage. Do not park your vehicle if the space is too small.***

OVF041110

5. Steering wheel control

- The above message will appear if the shift lever is in R (Reverse). The steering wheel will be controlled automatically.
- The system will be cancelled if you firmly hold the steering wheel while it is controlled automatically.
- The system will be cancelled if vehicle speed is over 7km/h(4.3mph).

⚠ WARNING

Do not put your hands between the steering wheel while it is being automatically controlled.

⚠ CAUTION

- ***Always drive slowly with the brake pedal applied.***
- ***Always check for objects around your vehicle before driving.***
- ***If the vehicle does not move even though the brake pedal is not depressed, check the surrounding before depressing the accelerator pedal. Be sure not to speed over 7km/h(4.3mph).***

✻ NOTICE

- **If you do not follow the instructions provided, you may fail to park your vehicle.**
  However, if the Parking Assist System warning sound (distance from object is within 30cm: continuous beep) occurs, slowly drive the vehicle to the reverse direction of the detected object after checking the surrounding.
- **Always check the surrounding before driving your vehicle if the Parking Assist System warning sound (distance from object is within 30cm: continuous beep) is heard for the object is close to your vehicle.**

To cancel the system while parking

Press the Smart Parking Assist System button or turn the steering wheel to the left or right.

■ Manual transaxle

OVF041114

■ Automatic transaxle

OVF041111

Gear shift while steering wheel control

When the above message appears with a beep sound, shift the gear and drive the vehicle with the brake pedal depressed.

⚠ CAUTION

Always check the surrounding before releasing the brake pedal.

⚠ WARNING

Always be careful while parking for other vehicles or pedestrians.

OVF041112

6. Smart Parking Assist System completed

Complete parking your vehicle according to the instructions on the LCD display. If required, manually control the steering wheel and complete parking your vehicle.

✻ NOTICE

The brake pedal must be depressed by the driver while parking your vehicle.

The system may be cancelled in the below conditions:

- Ignoring the gear shift message and drive the vehicle approximately 150cm (59in).
- The front and rear Parking Assist System warning sound (distance from object is within 30cm: continuous beep) is heard at the same time.
- 6 minutes have passed since the vehicle has been controlled by the Smart Parking Assist System.
- The shift lever is changed to the P (Park) or R (Reverse) position while searching for parking space.

OVF041113

Additional instructions(messages)

When the Smart Parking Assist System is operating, a message may appear regardless of the parking order.

The messages will appear according to the circumstances. Follow the instructions provided while parking your vehicle with the Smart Parking Assist System.

✻ NOTICE

- **In the below conditions the system will be cancelled. Park your vehicle manually.**
  1. Search for parking space
  - When the ABS/ESP is activated
  - When the vehicle speed is over 40km/h (24.8mph)
  - When you press the Smart Parking Assist System button (the front and rear Parking Assist System operates)
  - When you shift the shift lever to R (Reverse)

2. Steering wheel control
- When the ABS/ESP is activated
- When the vehicle speed is over 7km/h (4.3 mph)
- When you press the Smart Parking Assist System button (the front and rear Parking Assist System operates)
- When you shift the shift lever to D (Drive) before entering the parking space
- When you hold the steering wheel firmly

OVF041115

System malfunction

- If there is a problem with the system, when the system is turned on, the above message will appear. Also, the indicator on the button will not light up and a beep sound will be heard 3 times.
- If there is a problem with only the Smart Parking Assist System, the Parking Assist System will operate after 2 seconds.

  If you notice any problem, have your vehicle checked by an authorized HYUNDAI dealer as soon as possible.

REARVIEW CAMERA (IF EQUIPPED)

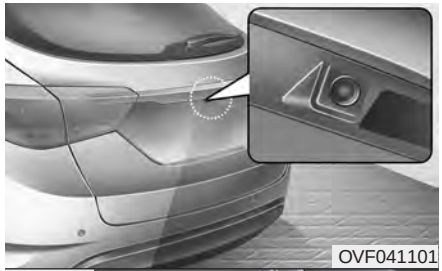

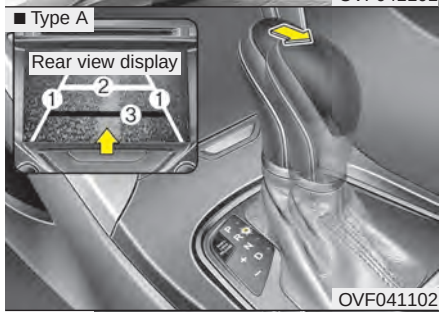

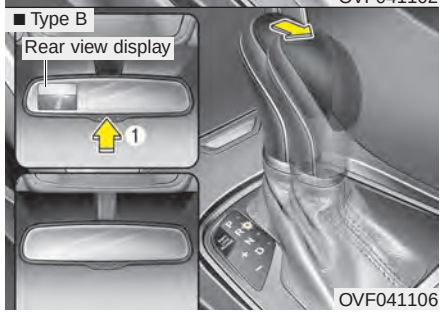

The rearview camera will activate when the back-up light is ON with the ignition switch ON and the shift lever in the R (Reverse) position.

Type B
The rearview camera may be turned off by pressing the ON/OFF button when the rearview camera is activated.
To turn the camera on again, press the ON/OFF button again when the ignition switch is on and the shift lever in R (Reverse). Also, the camera will turn on automatically whenever the ignition switch is turned off and on again.

✻ NOTICE

The warning "Warning ! Check surroundings for safety " will appear on the rearview display when the rearview camera is activated.

⚠ WARNING

- **This system is a supplementary function only. It is the responsibility of the driver to always check the inside/outside rearview mirror and the area behind the vehicle before and while backing up because there is a dead zone that cannot be seen through the camera.**
- **Always keep the camera lens clean. If the lens is covered with foreign matter, the camera may not operate normally.**

HAZARD WARNING FLASHER

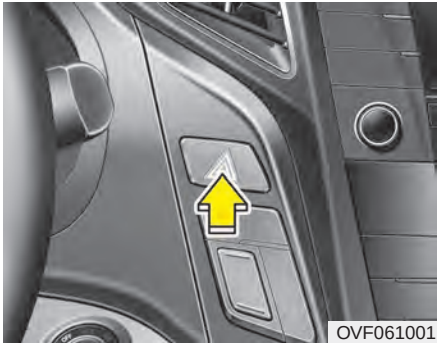
OVF061001

The hazard warning flasher should be used whenever you find it necessary to stop the car in a hazardous location. When you must make such an emergency stop, always pull off the road as far as possible.

The hazard warning lights are turned on by pushing in the hazard switch. This causes all turn signal lights to blink. The hazard warning lights will operate even though the key is not in the ignition switch.

To turn the hazard warning lights off, push the switch a second time.

LIGHTING

Battery saver function

- The purpose of this feature is to prevent the battery from being discharged. The system automatically turns off the parking lights when the driver removes the ignition key and opens the driver- side door.
- With this feature, the parking lights will be turned off automatically if the driver parks on the side of road at night.

  If necessary, to keep the lights on when the ignition key is removed, perform the following :

  1) Open the driver-side door.
  2) Turn the parking lights OFF and ON again using the light switch on the steering column.

Headlight (Headlamp) escort function (if equipped)

The headlights (and/or taillights) remain on for approximately 20 minutes after the ignition key is removed or turned to the ACC or LOCK position. However, if the driver's door is opened and closed, the headlights are turned off after 30 seconds.

The headlights can be turned off by pressing the lock button on the transmitter or smart key twice or turning off the light switch from the headlight or Auto light position.

⚠ CAUTION

If the driver gets out of the vehicle through other doors (except driver's door), the battery saver function does not operate and the headlight escort function does not turn off automatically. Therefore, it causes the battery to be discharged. In this case, make sure to turn off the lamp before getting out of the vehicle.

Headlight (Headlamp) welcome function (if equipped)

When the headlight switch is in the ON or AUTO position and all doors (and tailgate) are closed and locked, if you press the door unlock button on the transmitter or smart key, the headlights will come on for about 15 seconds.

If the headlight switch is in the AUTO position, the function can only operate at night.

At this time, if you press the door unlock button again or door lock button on the transmitter or smart key, the headlights will turn off immediately.

Smart cornering light

While driving the corner, for your sight and safety, the smart cornering light turns on automatically. The system will operate automatically as follows:

- When vehicle speed is under 10km/h and steering wheel angle approximately 80 degrees.
- When vehicle speed is over 10km/h and steering wheel angle approximately 35 degrees.
- When the vehicle is at a standstill.
- When moving rearwards with one of the above conditions satisfied the lights will light up the opposite direction.
- The smart corning light will operate only when the light switch is in the AUTO position. (vehicles equipped with AFLS)

OVF041120

Lighting control

The light switch has a Headlight and a Parking light position.

To operate the lights, turn the knob at the end of the control lever to one of the following positions:

(1) OFF position
(2) Auto light position (if equipped)
(3) Parking light position
(4) Headlight position

OVF041122

Parking light position ( )

When the light switch is in the parking light position, the tail, position, license and instrument panel lights are ON.

OVF041121

Headlight position ( )

When the light switch is in the headlight position the head, tail, position, license and instrument panel lights are ON.

✻ NOTICE

The ignition switch must be in the ON position to turn on the headlights.

OVF041123

Auto light/AFLS position (if equipped)

When the light switch is in the AUTO light position, the taillights and headlights will be turned ON or OFF automatically depending on the amount of light outside the vehicle.

If your vehicle is equipped with the adaptive front lighting system (AFLS), it will also operate when the headlamp is ON.

⚠ CAUTION

- ***Never place anything over the sensor (1) located on the instrument panel, this will ensure better auto-light system control.***
- ***Don't clean the sensor using a window cleaner, the cleaner may leave a light film which could interfere with sensor operation.***
- ***If your vehicle has window tint or other types of coating on the front windshield, the Auto light system may not work properly.***

Traffic change (for Europe)
(vehicle's equipped with AFLS)

Use this function when you visit a country with opposite traffic direction.

Follow the below procedure.

1. Stop the vehicle with the engine running.
2. Change the switch from the park light (≡DOE) position to the headlight position (≡D) 10 times within 15 seconds.
3. A beep sound will be heard 3 times to notify you the change has been made successfully.
4. To cancel the change, follow the above procedure again.

✻ NOTICE

- **If the traffic change function is activated, a beep sound will be heard 3 times.**
- **If the engine is turned off with the traffic change function activated, and the engine turned on again, a beep sound will be heard 3 times. It is to notify the driver the function is activated.**
- **If the traffic change is activated when you visit a country with opposite traffic direction, it will decrease the dazzle on oncoming vehicle drivers.**

OVF041128

High - beam operation

1. Turn the light switch to the headlight position.
2. Push the lever away from you.

✻ NOTICE

- **The high-beam indicator will light when the headlight high beams are switched on.**
- **To prevent the battery from being discharged, do not leave the lights on for a prolonged time while the engine is not running.**

⚠ WARNING

Do not use high beam when there are other vehicles. Using high beam could obstruct the other driver's vision.

OVF041126

Flashing headlights

Pull the lever towards you. It will return to the normal position when released. The headlight switch does not need to be on to use this flashing feature.

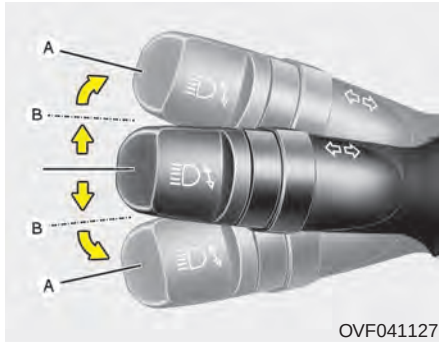

OVF041127

Turn signals and lane change signals

The ignition switch must be on for the turn signals to function. To turn on the turn signals, move the lever up or down (A). Green arrow indicators on the instrument panel indicate which turn signal is operating.

They will self-cancel after a turn is completed. If the indicator continues to flash after a turn, manually return the lever to the OFF position.

To signal a lane change, move the turn signal lever slightly and hold it in position (B). The lever will return to the OFF position when released.

If an indicator stays on and does not flash or if it flashes abnormally, one of the turn signal bulbs may be burned out and will require replacement.

One-touch lane change function (if equipped)

To activate an one-touch lane change function, move the turn signal lever slightly and then release it. The lane change signals will blink 3 times.

✻ NOTICE

If an indicator flash is abnormally quick or slow, bulb may be burned out or have a poor electrical connection in the circuit.

■ Type A

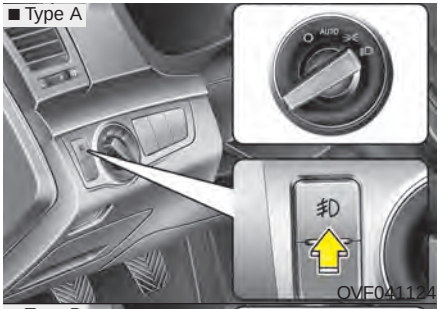

OVF041124

■ Type B

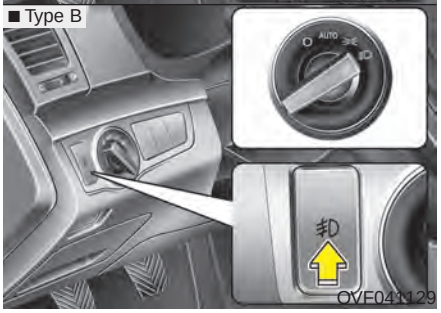

OVF041129

Front fog light (if equipped)

Fog lights are used to provide improved visibility when visibility is poor due to fog, rain or snow, etc.

The fog lights will turn on when:

1. Park light is on.
2. The front fog light switch is on.

⚠ CAUTION

When in operation, the fog lights consume large amounts of vehicle electrical power. Only use the fog lights when visibility is poor.

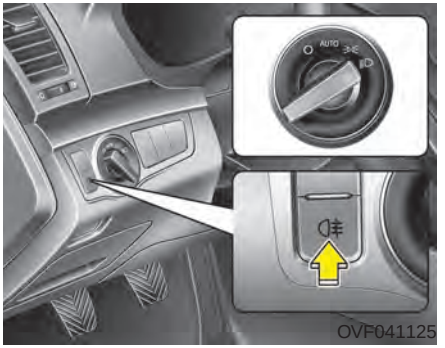

OVF041125

Rear fog light (if equipped)

To turn on the rear fog lights do one of the following:

- Position the light switch in the headlight position and then turn on the rear fog light switch.
- Turn on the front fog light(if equipped) and then turn on the rear fog light switch.

To turn the rear fog lights off, do one of the following:

- Turn off the headlight switch.
- Turn off the rear fog light switch.

✻ NOTICE

To turn on the rear fog light switch, the ignition switch must be in the ON position.

Daytime running light (if equipped)

Daytime Running Lights (DRL) can make it easier for others to see the front of your vehicle during the day. DRL can be helpful in many different driving conditions, and it is especially helpful after dawn and before sunset.

The DRL system will turn off the dedicated lamp when:

1. The parklight or headlight (low beam) switch is ON.
2. The engine is OFF.

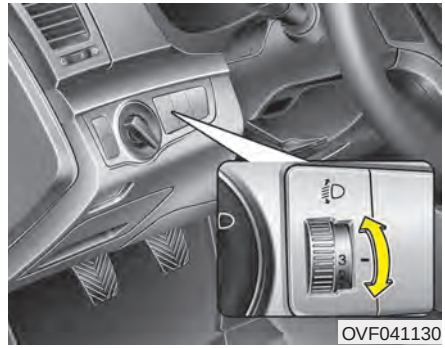

OVF041130

Headlight leveling device (if equipped)

Manual type

To adjust the headlight beam level according to the number of the passengers and the loading weight in the luggage area, turn the beam leveling switch.

The higher the number of the switch is positioned, the lower the headlight beam level. Always keep the headlight beam at the proper leveling position, or headlights may dazzle other road users.

Listed below are the examples of proper switch settings. For loading conditions other than those listed below, adjust the switch position so that the beam level may be the nearest as the condition obtained according to the list.

Loading condition	Switch position
Driver only	0
Driver + Front passenger	0
Full passengers (including driver)	1
Full passengers (including driver) + Maximum permissible loading	2
Driver + Maximum permissible loading	3

Automatic type

It automatically adjusts the headlight beam level according to the number of passengers and loading weight in the luggage area.

And it offers proper headlight beam under various conditions.

⚠ WARNING

If it does not work properly even though your car is inclined backward according to passenger's posture, or the headlight beam is irradiated to the high or low position, have your vehicle inspected by an authorized HYUNDAI dealer.

Do not attempt to inspect or replace the wiring yourself.

OVF041123

AFLS (Adaptive Front Lighting System) (if equipped)

Adaptive front lighting system uses the steering angle and vehicle speed, to keep your field of vision wide by swiveling and leveling the headlamp.

Change the switch to the AUTO position when the engine is running. The adaptive front lighting system will operate when the headlamp is ON. To turn off the AFLS, change the switch to other positions. After turning the AFLS off, headlamp swiveling no longer occurs, but leveling operates continuously.

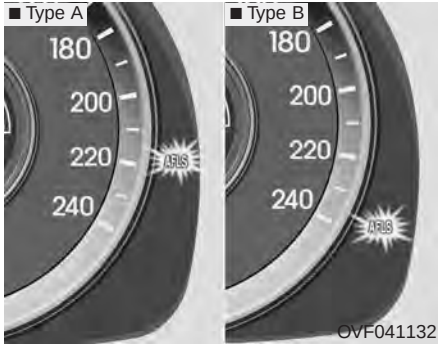

OVF041132

If the AFLS malfunction indicator comes on, the AFLS is not working properly. Drive to the nearest safe location and restart the engine. If the indicator continuously remains on, take your vehicle to an authorized HYUNDAI dealer and have the system checked.

WIPERS AND WASHERS

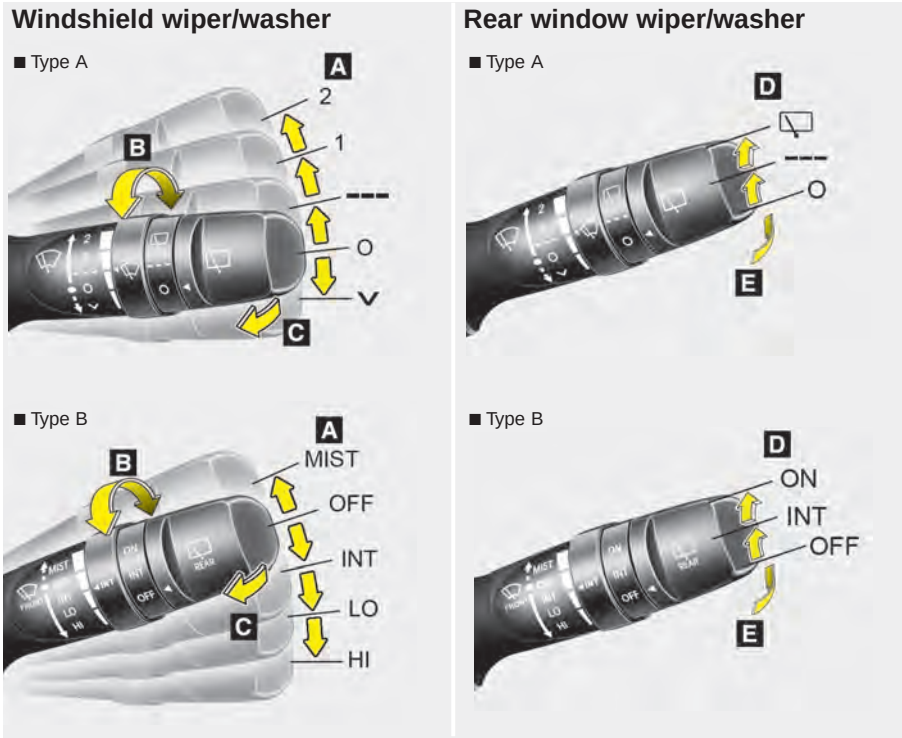

OXM049230L/OXM049231L/OAM049048L/OAM049048N

A : Wiper speed control (front)
- ∨ / MIST – Single wipe
- O / OFF – Off
- --- / INT – Intermittent wipe
  AUTO* – Auto control wipe
- 1 / LO– Low wiper speed
- 2 / HI – High wiper speed

B : Intermittent control wipe time adjustment

C : Wash with brief wipes (front)

D : Rear wiper/washer control
- / ON – Continuous wipe
- --- / INT – Intermittent wipe (if equipped)
- O / OFF – Off

E : Wash with brief wipes (rear)

* : if equipped

Windshield wipers

Operates as follows when the ignition switch is turned ON.

∨ / MIST : For a single wiping cycle, move the lever to this (∨ / MIST) position and release it. The wipers will operate continuously if the lever is held in this position.

O / OFF : Wiper is not in operation

--- / INT : Wiper operates intermittently at the same wiping intervals. Use this mode in light rain or mist. To vary the speed setting, turn the speed control knob.

1 / LO : Normal wiper speed

2 / HI : Fast wiper speed

✻ NOTICE

If there is heavy accumulation of snow or ice on the windshield, defrost the windshield for about 10 minutes, or until the snow and/or ice is removed before using the windshield wipers to ensure proper operation.

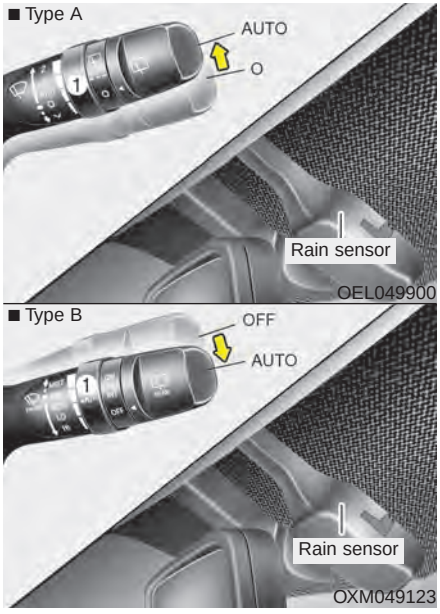

Auto control (if equipped)

The rain sensor located on the upper end of the windshield glass senses the amount of rainfall and controls the wiping cycle for the proper interval. The more it rains, the faster the wiper operates. When the rain stops, the wiper stops.

To vary the speed setting, turn the speed control knob (1).

If the wiper switch is set in AUTO mode when the ignition switch is ON, the wiper will operate once to perform a self-check of the system. Set the wiper to OFF position when the wiper is not in use.

⚠ CAUTION

When the ignition switch is ON and the windshield wiper switch is placed in the AUTO mode, use caution in the following situations to avoid any injury to the hands or other parts of the body:

- ***Do not touch the upper end of the windshield glass facing the rain sensor.***
- ***Do not wipe the upper end of the windshield glass with a damp or wet cloth.***
- ***Do not put pressure on the windshield glass.***

⚠ CAUTION

When washing the vehicle, set the wiper switch in the OFF position to stop the auto wiper operation.

The wiper may operate and be damaged if the switch is set in the AUTO mode while washing the vehicle.

Do not remove the sensor cover located on the upper end of the passenger side windshield glass. Damage to system parts could occur and may not be covered by your vehicle warranty.

When starting the vehicle in winter, set the wiper switch in the OFF position. Otherwise, wipers may operate and ice may damage the windshield wiper blades. Always remove all snow and ice and defrost the windshield properly prior to operating the windshield wipers.

■ Type A

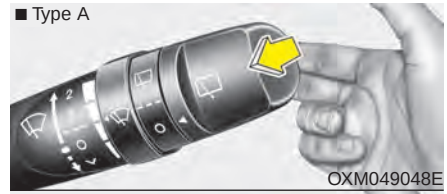

OXM049048E

■ Type B

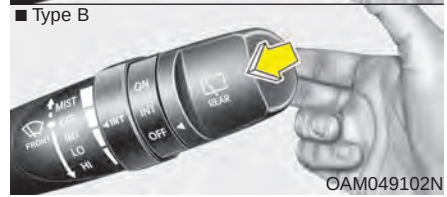

OAM049102N

Windshield washers

In the OFF position, pull the lever gently toward you to spray washer fluid on the windshield and to run the wipers 1-3 cycles.

Use this function when the windshield is dirty.

The spray and wiper operation will continue until you release the lever.

If the washer does not work, check the washer fluid level. If the fluid level is not sufficient, you will need to add appropriate non-abrasive windshield washer fluid to the washer reservoir.

The reservoir filler neck is located in the front of the engine compartment on the passenger side.

⚠ CAUTION

To prevent possible damage to the washer pump, do not operate the washer when the fluid reservoir is empty.

⚠ WARNING

Do not use the washer in freezing temperatures without first warming the windshield with the defrosters; the washer solution could freeze on the windshield and obscure your vision.

⚠ CAUTION

- ***To prevent possible damage to the wipers or windshield, do not operate the wipers when the windshield is dry.***
- ***To prevent damage to the wiper blades, do not use gasoline, kerosene, paint thinner, or other solvents on or near them.***
- ***To prevent damage to the wiper arms and other components, do not attempt to move the wipers manually.***

Headlight washer (if equipped)

If your vehicle is equipped with the headlight washer it will operate at the same time when you operate the windshield washer. It will operate when the headlight switch is in the first or second position and the ignition switch or engine start/stop button is in the ON position.

The washer fluid will be sprayed on to the headlights.

✻ NOTICE

Check the headlight washers periodically to confirm that the washer fluid is being sprayed properly onto the headlight lenses.

■ Type A

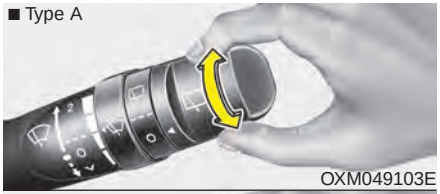

OXM049103E

■ Type B

OAM049103N

Rear window wiper and washer switch

The rear window wiper and washer switch is located at the end of the wiper and washer switch lever. Turn the switch to the desired position to operate the rear wiper and washer.

/ ON - Normal wiper operation

--- / INT - Intermittent wiper operation (if equipped)

O / OFF - Wiper is not in operation

■ Type A

OXM049125L

■ Type B

OXM049125

Push the lever away from you to spray rear washer fluid and to run the rear wipers 1~3 cycles. The spray and wiper operation will continue until you release the lever. (if equipped)

INTERIOR LIGHT

⚠ CAUTION

Do not use the interior lights for extended periods when the engine is not running.
It may cause battery discharge.

⚠ WARNING

Do not use the interior lights when driving in the dark. Accidents could happen because the view may be obscured by interior lights.

Interior lamp AUTO cut

- When all entrances are closed, if you lock the vehicle by using the transmitter or the smart key, all interior lamp will be off within 5 seconds.
- If you do not operate anything in the vehicle after turning off the engine, the lights will turn off after 20 minutes.

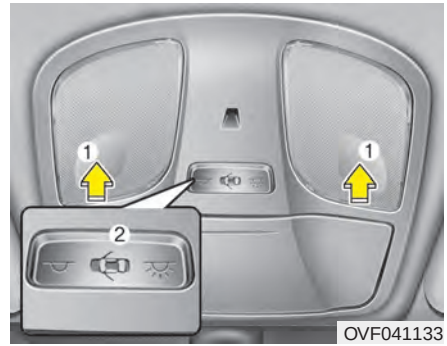

OVF041133

Map lamp

Press the lens (1) to turn the map lamp on or off

- : The map lamp and room lamp stays on at all times.
- :
  - The map lamp and room lamp comes on when a door is opened. The lamps go out after approximately 30 seconds.
  - The map lamp and room lamp comes on for approximately 30 seconds when doors are unlocked with a transmitter or smart key as long as the doors are not opened.
  - The map lamp and room lamp will stay on for approximately 20 minutes if a door is opened with the ignition switch in the ACC or LOCK/OFF position.
  - The map lamp and room lamp will stay on continuously if the door is opened with the ignition switch in the ON position.
  - The map lamp and room lamp will go out immediately if the ignition switch is changed to the ON position or all doors are locked.
- : The lamps are off even if a door is opened.

✻ NOTICE

When the lamp is turned on by pressing the lens (1), the lamp does not turn off even if the switch (2) is in the OFF position.

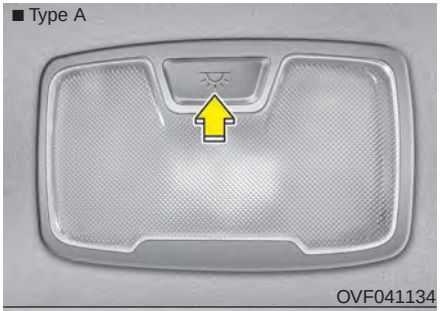

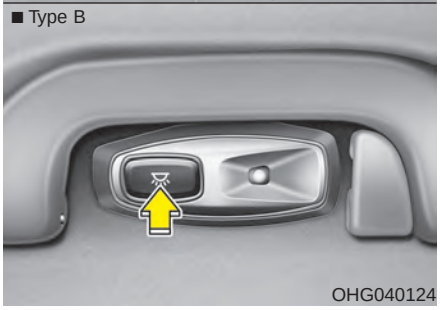

Room lamp

Press the button to turn the light on or off.

Vanity mirror lamp

Opening the cover of the vanity mirror will automatically turn on the mirror lamp.

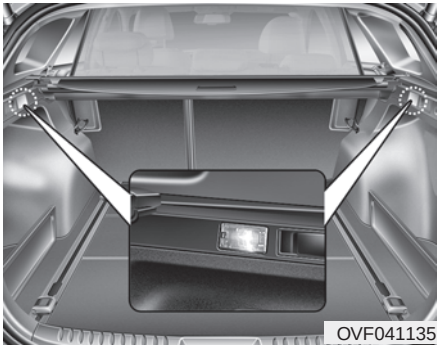

Luggage room lamp

The luggage room lamp comes on when the tailgate is opened.

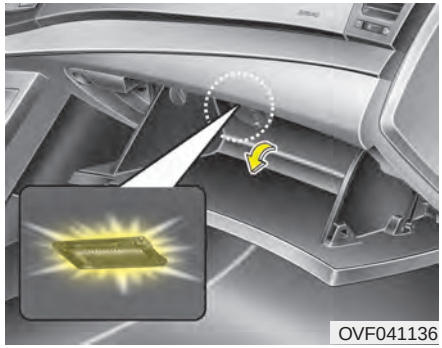

Glove box lamp

The glove box lamp comes on when the glove box is opened.

WELCOME SYSTEM (IF EQUIPPED)

Escort welcome (if equipped)

When the headlight(light switch in the headlight or AUTO position) is on and all doors (and tailgate) are locked and closed, the headlight, position light and tail light will come on for 15 seconds if any of the below is performed.

- Without smart key system
  - When the door unlock button is pressed on the transmitter.
- With the smart key system
  - When the door unlock button is pressed on the smart key.

At this time, if you press the door lock button (on the transmitter or smart key), the lights will turn off immediately.

Interior light

When the interior light switch is in the DOOR position and all doors (and tailgate) are locked and closed, the room lamp and foot lamp (if equipped) will come on for 30 seconds if any of the below is performed.

- Without smart key system
  - When the door unlock button is pressed on the transmitter.
- With the smart key system
  - When the door unlock button is pressed on the smart key.
  - When the button of the outside door handle is pressed.

At this time, if you press the door lock button, the lamps will turn off immediately.

DEFROSTER

⚠ CAUTION

To prevent damage to the conductors bonded to the inside surface of the rear window, never use sharp instruments or window cleaners containing abrasives to clean the window.

✻ NOTICE

If you want to defrost and defog the front windshield, refer to "Windshield Defrosting and Defogging" in this section.

OVF041140

Rear window defroster

The defroster heats the window to remove frost, fog and thin ice from the interior and exterior of the rear window, while engine is running.

- To activate the rear window defroster, press the rear window defroster button located in the center facia switch panel. The indicator on the rear window defroster button illuminates when the defroster is ON.
- To turn off the defroster, press the rear window defroster button again.

✻ NOTICE

- **If there is heavy accumulation of snow on the rear window, brush it off before operating the rear defroster.**
- **The rear window defroster automatically turns off after approximately 20 minutes or when the ignition switch is turned off.**

Outside mirror defroster (if equipped)

The outside mirror defroster will operate at the same time you turn on the rear window defroster.

Front wiper deicer (if equipped)

The front wiper deicer will operate at the same time you turn on the rear window defroster.

MANUAL CLIMATE CONTROL SYSTEM (IF EQUIPPED)

1. Fan speed control switch
2. Air conditioning button
3. OFF button
4. Mode selection knob
5. MAX A/C selection button
6. Air intake control button
7. Temperature control switch

OVF041142

Heating and air conditioning

1. Start the engine.
2. Set the mode to the desired position.
   To improve the effectiveness of heating and cooling:
   - Heating:
   - Cooling:
3. Set the temperature control to the desired position.
4. Set the air intake control to the outside (fresh) air position.
5. Set the fan speed control to the desired speed.
6. If air conditioning is desired, turn the air conditioning system on.

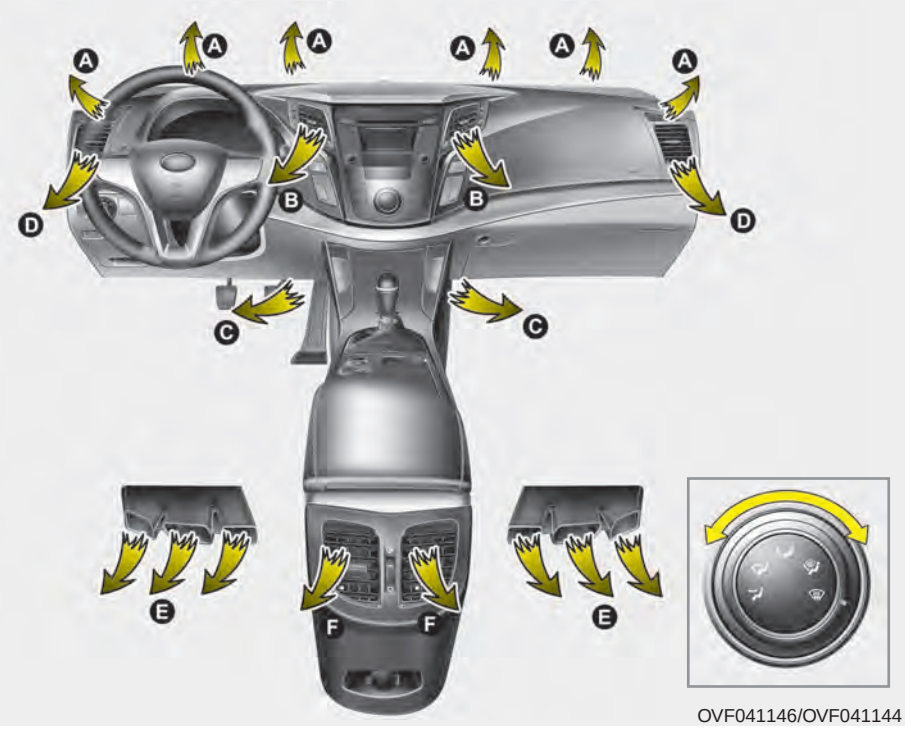

OVF041146/OVF041144

Mode selection

The mode selection knob controls the direction of the airflow in the vehicle.
Turn the knob to select the desired mode.

Face-Level (B, D, F)

Air flow is directed toward the upper body and face. Additionally, each outlet can be controlled to direct the air discharged from the outlet.

Bi-Level (B, D, C, E, F)

Air flow is directed towards the face and the floor.

Floor-Level (A, C, E, D)

Most of the air flow is directed to the floor, with a small amount of the air being directed to the windshield and side window defrosters.

-

Floor/Defrost-Level (A, C, D, E, F)

Most of the air flow is directed to the floor and the windshield with a small amount directed to the side window defrosters.

Defrost-Level (A, D)

Most of the air flow is directed to the windshield with a small amount of air directed to the side window defrosters.

OVF041145

MAX A/C-Level

The MAX A/C mode is used to cool the inside of the vehicle faster.

In this mode, the air conditioning and the recirculated air position will be selected automatically.

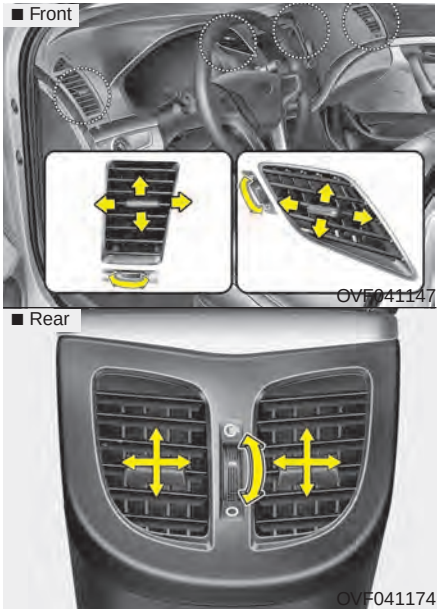

Instrument panel vents

The outlet vents can be opened or closed separately using the thumbwheel.

Also, you can adjust the direction of air delivery from these vents using the vent control lever as shown.

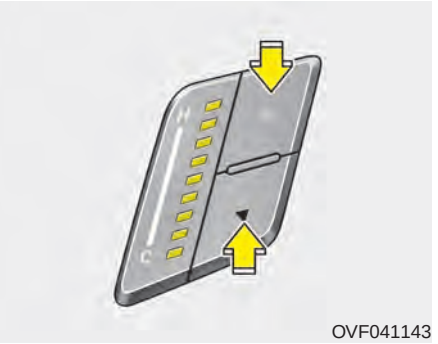

Temperature control

The temperature control switch allows you to control the temperature of the air-flow in the vehicle.

To change the temperature:

- Press the ▲ (red) switch to increase temperature.
- Press the ▼ (blue) switch to decrease temperature.

Air intake control

The air intake control is used to select the outside (fresh) air position or recirculated air position.

To change the air intake control position, press the control button.

Recirculated air position

With the recirculated air position selected, air from the passenger compartment will be drawn through the heating system and heated or cooled according to the function selected.

Outside (fresh) air position

With the outside (fresh) air position selected, air enters the vehicle from outside and is heated or cooled according to the function selected.

✻ NOTICE

Prolonged operation of the heater in the recirculated air position (without air conditioning selected) may cause fogging of the windshield and side windows and the air within the passenger compartment may become stale.
In addition, prolonged use of the air conditioning with the recirculated air position selected will result in excessively dry air in the passenger compartment.

⚠ WARNING

- **The continuous use of recirculated air in the climate control system may increase humidity inside the vehicle, causing the glass to fog and obscuring visibility.**
- **Do not sleep in a vehicle with the air conditioning or heating system on. It may cause serious harm or death due to a drop in the oxygen level and/or body temperature.**
- **The continuous use of recirculated air in the climate control system can produce drowsiness or sleepiness, which may result in a loss of vehicle control. Set the air intake control to the outside (fresh) air position as much as possible while driving.**

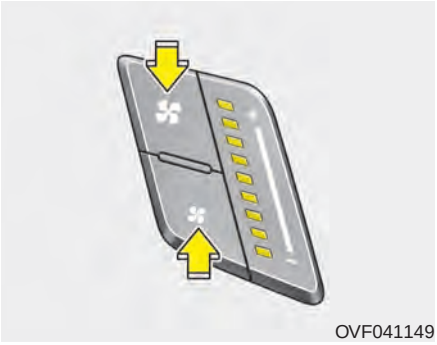
OVF041149

Fan speed control

The ignition switch must be in the ON position for fan operation.
The fan speed control switch allows you to control the fan speed of the airflow in the vehicle.

To change the fan speed:

- Press the ✣ switch to increase fan speed.
- Press the ✣ switch to decrease fan speed.

To turn off the fan speed, press the OFF button.

OVF041187

Air conditioning (if equipped)

Press the A/C button to turn the air conditioning system on (indicator light will illuminate). Press the button again to turn the air conditioning system off.

OVF041164

OFF mode

Press the OFF button to turn off the air climate control system. However, you can still operate the air intake buttons as long as the ignition switch is in the ON position.

System operation

Ventilation

1. Set the mode to the position.
2. Set the air intake control to the outside (fresh) air position.
3. Set the temperature control to the desired position.
4. Set the fan speed control to the desired speed.

Heating

1. Set the mode to the position.
2. Set the air intake control to the outside (fresh) air position.
3. Set the temperature control to the desired position.
4. Set the fan speed control to the desired speed.
5. If dehumidified heating is desired, turn the air conditioning system on.

- If the windshield fogs up, set the mode to the or position.

Operation Tips

- To keep dust or unpleasant fumes from entering the vehicle through the ventilation system, temporarily set the air intake control to the recirculated air position. Be sure to return the control to the fresh air position when the irritation has passed to keep fresh air in the vehicle. This will help keep the driver alert and comfortable.
- Air for the heating/cooling system is drawn in through the grilles just ahead of the windshield. Care should be taken that these are not blocked by leaves, snow, ice or other obstructions.
- To prevent interior fog on the windshield, set the air intake control to the fresh air position and fan speed to the desired position, turn on the air conditioning system, and adjust the temperature control to desired temperature.

Air conditioning (if equipped)

All HYUNDAI Air Conditioning Systems are filled with environmentally friendly R-134a refrigerant which does not damage to the ozone layer.

1. Start the engine. Push the air conditioning button.
2. Set the mode to the position.
3. Set the air intake control to the outside air or recirculated air position.
4. Adjust the fan speed control and temperature control to maintain maximum comfort.

- When maximum cooling is desired, set the temperature control to the lowest temperature, press the MAX A/C position selection button, then set the fan speed control to the highest speed.

✻ NOTICE

- **When using the air conditioning system, monitor the temperature gauge closely while driving up hills or in heavy traffic when outside temperatures are high. Air conditioning system operation may cause engine overheating. Continue to use the blower fan but turn the air conditioning system off if the temperature gauge indicates engine overheating.**
- **When opening the windows in humid weather air conditioning may create water droplets inside the vehicle. Since excessive water droplets may cause damage to electrical equipment, air conditioning should only be used with the windows closed.**

Air conditioning system operation tips

- If the vehicle has been parked in direct sunlight during hot weather, open the windows for a short time to let the hot air inside the vehicle escape.
- Use air conditioning to reduce humidity and moisture inside the vehicle on rainy or humid days.
- During air conditioning system operation, you may occasionally notice a slight change in engine speed as the air conditioning compressor cycles. This is a normal system operation characteristic.
- Use the air conditioning system every month only for a few minutes to ensure maximum system performance.
- When using the air conditioning system, you may notice clear water dripping (or even puddling) on the ground under the passenger side of the vehicle. This is a normal system operation characteristic.
- Operating the air conditioning system in the recirculated air position provides maximum cooling, however, continual operation in this mode may cause the air inside the vehicle to become stale.
- During cooling operation, you may occasionally notice a misty air flow because of rapid cooling and humid air intake. This is a normal system operation characteristic.

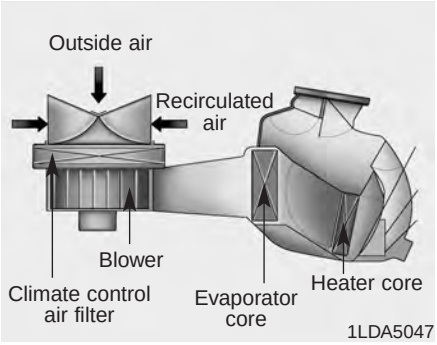

Climate control air filter (if equipped)

The climate control air filter installed behind the glove box filters the dust or other pollutants that come into the vehicle from the outside through the heating and air conditioning system. If dust or other pollutants accumulate in the filter over a period of time, the air flow from the air vents may decrease, resulting in moisture accumulation on the inside of the windshield even when the outside (fresh) air position is selected. If this happens, have the climate control air filter replaced by an authorized HYUNDAI dealer.

✻ NOTICE

- **Replace the filter according to the Maintenance Schedule.**
  If the car is being driven in severe conditions such as dusty, rough roads, more frequent climate control air filter inspections and changes are required.
- **When the air flow rate suddenly decreases, the system should be checked at an authorized HYUNDAI dealer.**

Checking the amount of air conditioner refrigerant and compressor lubricant

When the amount of refrigerant is low, the performance of the air conditioning is reduced. Overfilling also has a bad influence on the air conditioning system.

Therefore, if abnormal operation is found, have the system inspected by an authorized HYUNDAI dealer.

✻ NOTICE

It is important when servicing the air conditioning system that the correct type and amount of oil and refrigerant is used. Otherwise, damage to the compressor and abnormal system operation may occur.

⚠ WARNING

The air conditioning system should be serviced by an authorized HYUNDAI dealer. Improper service may cause serious injury to the person performing the service.

AUTOMATIC CLIMATE CONTROL SYSTEM (IF EQUIPPED)

■ **Type A (Vehicle equipped with audio system)**

■ **Type B (Vehicle equipped with AVN system)**

1. Driver's temperature control button
2. Front windshield defroster button
3. Air conditioning button
4. Mode selection button
5. Fan speed control knob
6. AUTO (automatic control) button
7. OFF button
8. Dual temperature control selection button
9. Air intake control button
10. Climate control information screen selection button
11. Passenger's temperature control button
12. Climate control display

OVF041150/OVF041151

OVF041152

Automatic heating and air conditioning

The automatic climate control system is controlled by simply setting the desired temperature.

The Full Automatic Temperature Control (FATC) system automatically controls the heating and cooling system as follows:

1. Press the AUTO button. The modes, fan speeds, air intake and air-conditioning will be controlled automatically by setting the temperature.
2. Set the temperature to the desired temperature.
3. To turn the automatic operation off, select any button of the following:
   - Mode selection button
   - Front windshield defroster button
   - Fan speed control knob

   The selected function will be controlled manually while other functions operate automatically.

For your convenience and to improve the effectiveness of the climate control, use the AUTO button and set the temperature to 22°C/71°F (23°C/73°F-Except Europe).

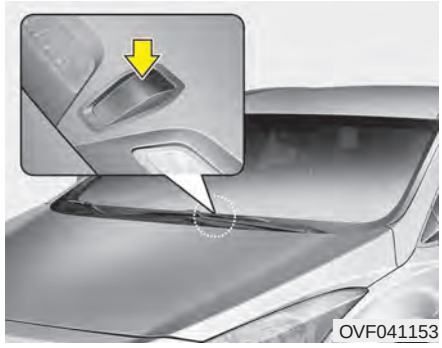
OVF041153

✻ NOTICE

Placing any object over the sensor on the instrument panel may interfere with the heating and cooling system.

Manual heating and air conditioning

The heating and cooling system can be controlled manually by pressing buttons or turning knob(s) other than the AUTO button. In this case, the system works sequentially according to the order of buttons or knob(s) selected.

1. Start the engine.
2. Set the mode to the desired position.
   To improve the effectiveness of heating and cooling:
   - Heating:
   - Cooling:
3. Set the temperature control to the desired position.
4. Set the air intake control to the outside (fresh) air position.
5. Set the fan speed control to the desired speed.
6. If air conditioning is desired, turn the air conditioning system on.

Press the AUTO button in order to convert to full automatic control of the system.

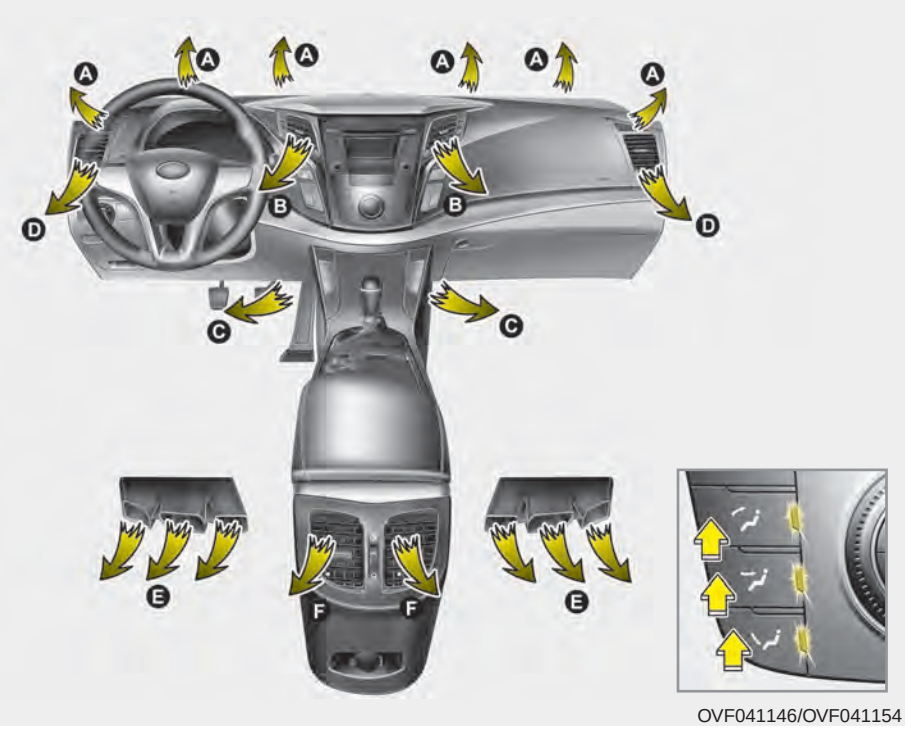

OVF041146/OVF041154

Mode selection

The mode selection button controls the direction of the airflow in the vehicle.

If you push the button once, the corresponding switch will turn on, and if you push the button again, the switch will turn off.

Face-Level (B, D, F)

Air flow is directed toward the upper body and face. Additionally, each outlet can be controlled to direct the air discharged from the outlet.

Floor-Level (A, C, D, E)

Most of the air flow is directed to the floor.

Defrost-Level (A, D)

Most of the air flow is directed to the windshield.

Also you may select 2~3 modes at the same time.

- face ( ) + floor ( ) mode
- face ( ) + defrost ( ) mode
- floor ( ) + defrost ( ) mode
- face ( ) + floor ( ) + defrost ( ) mode

OVF041155

Maximum (MAX) defrost mode

When you select the MAX defrost mode, the following system will set automatically:

- The air conditioning system will be turn on.
- The outside(fresh) air position will be selected.
- The fan speed will set to the high speed.

To turn the MAX defrost mode off, press the mode button or MAX defrost button again or AUTO button.

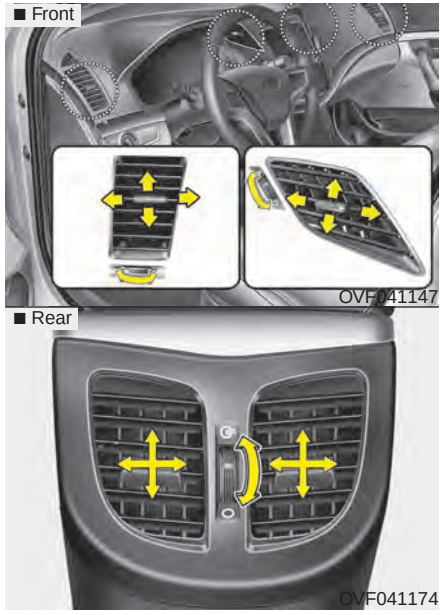

Instrument panel vents

The outlet vents can be opened or closed separately using the thumbwheel.

Also, you can adjust the direction of air delivery from these vents using the vent control lever as shown.

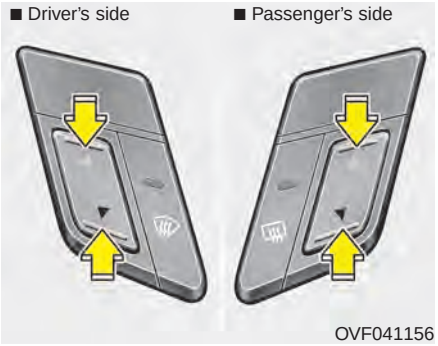

Temperature control

The temperature will increase to the maximum (HIGH) by holding the ▲ button.

The temperature will decrease to the minimum (LOW) by holding the ▼ button.

The temperature will increase or decrease by 0.5°C/1°F. When set to the lowest temperature, the air conditioning will operate continuously.

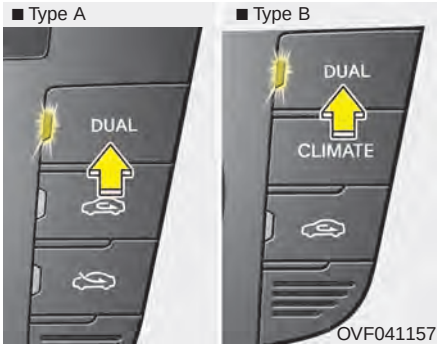

Adjusting the driver and passenger side temperature individually

1. Press the DUAL button to operate the driver and passenger side temperature individually. Also, if the passenger side temperature control button is operated, it will automatically change to the DUAL mode as well.
2. Operate the driver side temperature control to adjust the driver side temperature. Operate the passenger side temperature control to adjust the passenger side temperature.

When the driver side temperature is set to the highest (HIGH) or lowest (LOW) temperature, the DUAL mode deactivates for maximum heating or cooling.

Adjusting the driver and passenger side temperature equally

1. Press the DUAL button again to deactivate DUAL mode. The passenger side temperature will be set to the same temperature as the driver side.
2. Operate the driver side temperature control button. The driver and passenger side temperature will be adjusted equally.

OVF041158

Temperature conversion

You can switch the temperature mode between Centigrade to Fahrenheit as follows:

While pressing the OFF button, press the AUTO button for 3 seconds or more.

The display will change from Centigrade to Fahrenheit, or from Fahrenheit to Centigrade.

✻ NOTICE

- **If the battery has been discharged or disconnected, the temperature mode display will reset to Centigrade.**
- **Vehicle's equipped with AVN system refer to the navigation manual provided separately.**

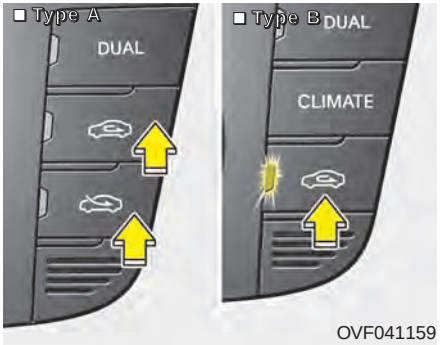

Air intake control

This is used to select the outside (fresh) air position or recirculated air position.

To change the air intake control position, push the control button.

Recirculated air position

■ Type A

■ Type B

With the recirculated air position selected, air from the passenger compartment will be drawn through the heating system and heated or cooled according to the function selected.

Outside (fresh) air position

■ Type A

■ Type B

With the outside (fresh) air position selected, air enters the vehicle from outside and is heated or cooled according to the function selected.

✻ NOTICE

Prolonged operation of the heater in the recirculated air position (without air conditioning selected) may cause fogging of the windshield and side windows and the air within the passenger compartment may become stale.

In addition, prolonged use of the air conditioning with the recirculated air position selected will result in excessively dry air in the passenger compartment.

⚠ WARNING

- **The continuous use of recirculated air in the climate control system may increase humidity inside the vehicle, causing the glass to fog and obscuring visibility.**
- **Do not sleep in a vehicle with the air conditioning or heating system on. It may cause serious harm or death due to a drop in the oxygen level and/or body temperature.**
- **The continuous use of recirculated air in the climate control system can produce drowsiness or sleepiness, which may result in a loss of vehicle control. Set the air intake control to the outside (fresh) air position as much as possible while driving.**

OVF041160

Fan speed control

The fan speed control knob allows you to control the fan speed of the airflow in the vehicle.

To change the fan speed:

- Turn the knob to the right (+) to increase fan speed.
- Turn the knob to the left (-) to decrease fan speed.

To turn off the fan speed, press the OFF button.

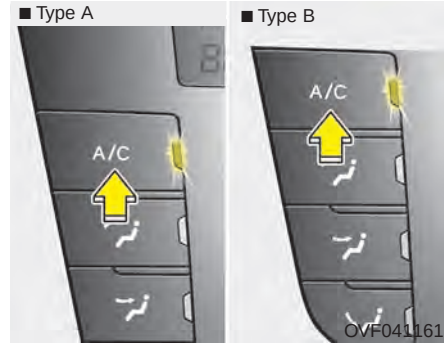

OVF041161

Air conditioning

Press the A/C button to turn the air conditioning system on (indicator light will illuminate).

Press the button again to turn the air conditioning system off.

OVF041162

OFF mode

Press the OFF button to turn off the air climate control system. However, you can still operate the air intake buttons as long as the ignition switch is in the ON position.

OVF041163

Climate information screen selection (for type B)

Press the climate information screen selection button to display climate information on the screen.

System operation

Ventilation

1. Set the mode to the position.
2. Set the air intake control to the outside (fresh) air position.
3. Set the temperature control to the desired position.
4. Set the fan speed control to the desired speed.

Heating

1. Set the mode to the position.
2. Set the air intake control to the outside (fresh) air position.
3. Set the temperature control to the desired position.
4. Set the fan speed control to the desired speed.
5. If dehumidified heating is desired, turn the air conditioning system on.

- If the windshield fogs up, set the mode to the or position.

Operation Tips

- To keep dust or unpleasant fumes from entering the vehicle through the ventilation system, temporarily set the air intake control to the recirculated air position. Be sure to return the control to the fresh air position when the irritation has passed to keep fresh air in the vehicle. This will help keep the driver alert and comfortable.
- Air for the heating/cooling system is drawn in through the grilles just ahead of the windshield. Care should be taken that these are not blocked by leaves, snow, ice or other obstructions.
- To prevent interior fog on the windshield, set the air intake control to the fresh air position and fan speed to the desired position, turn on the air conditioning system, and adjust the temperature control to desired temperature.

Air conditioning (if equipped)

All HYUNDAI Air Conditioning Systems are filled with environmentally friendly R-134a refrigerant which does not damage to the ozone layer.

1. Start the engine. Push the air conditioning button.
2. Set the mode to the position.
3. Set the air intake control to the outside air or recirculated air position.
4. Adjust the fan speed control and temperature control to maintain maximum comfort.

✻ NOTICE

- **When using the air conditioning system, monitor the temperature gauge closely while driving up hills or in heavy traffic when outside temperatures are high. Air conditioning system operation may cause engine overheating. Continue to use the blower fan but turn the air conditioning system off if the temperature gauge indicates engine overheating.**
- **When opening the windows in humid weather air conditioning may create water droplets inside the vehicle. Since excessive water droplets may cause damage to electrical equipment, air conditioning should only be used with the windows closed.**

Air conditioning system operation tips

- If the vehicle has been parked in direct sunlight during hot weather, open the windows for a short time to let the hot air inside the vehicle escape.
- Use air conditioning to reduce humidity and moisture inside the vehicle on rainy or humid days.
- During air conditioning system operation, you may occasionally notice a slight change in engine speed as the air conditioning compressor cycles. This is a normal system operation characteristic.
- Use the air conditioning system every month only for a few minutes to ensure maximum system performance.
- When using the air conditioning system, you may notice clear water dripping (or even puddling) on the ground under the passenger side of the vehicle. This is a normal system operation characteristic.
- Operating the air conditioning system in the recirculated air position provides maximum cooling, however, continual operation in this mode may cause the air inside the vehicle to become stale.
- During cooling operation, you may occasionally notice a misty air flow because of rapid cooling and humid air intake. This is a normal system operation characteristic.

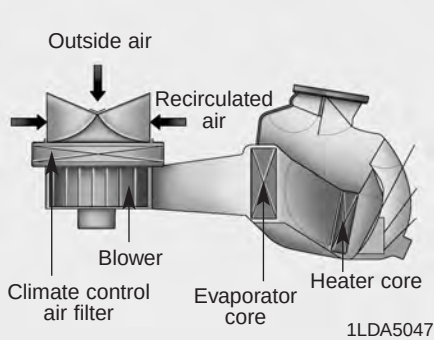

Climate control air filter (if equipped)

The climate control air filter installed behind the glove box filters the dust or other pollutants that come into the vehicle from the outside through the heating and air conditioning system. If dust or other pollutants accumulate in the filter over a period of time, the air flow from the air vents may decrease, resulting in moisture accumulation on the inside of the windshield even when the outside (fresh) air position is selected. If this happens, have the climate control air filter replaced by an authorized HYUNDAI dealer.

✻ NOTICE

- **Replace the filter according to the Maintenance Schedule.**
  If the car is being driven in severe conditions such as dusty, rough roads, more frequent climate control air filter inspections and changes are required.
- **When the air flow rate suddenly decreases, the system should be checked at an authorized HYUNDAI dealer.**

Checking the amount of air conditioner refrigerant and compressor lubricant

When the amount of refrigerant is low, the performance of the air conditioning is reduced. Overfilling also has a bad influence on the air conditioning system.

Therefore, if abnormal operation is found, have the system inspected by an authorized HYUNDAI dealer.

✻ NOTICE

It is important when servicing the air conditioning system that the correct type and amount of oil and refrigerant is used. Otherwise, damage to the compressor and abnormal system operation may occur.

⚠ **WARNING**

The air conditioning system should be serviced by an authorized HYUNDAI dealer. Improper service may cause serious injury to the person performing the service.

WINDSHIELD DEFROSTING AND DEFOGGING

⚠ WARNING - Windshield heating

Do not use the position during cooling operation in extremely humid weather. The difference between the temperature of the outside air and the windshield could cause the outer surface of the windshield to fog up, causing loss of visibility. In this case, set the mode selection to the position and fan speed control to the lower speed.

- For maximum defrosting, set the temperature control to the hottest position and the fan speed control to the highest speed.
- If warm air to the floor is desired while defrosting or defogging, set the mode to the floor-defrost position.
- Before driving, clear all snow and ice from the windshield, rear window, outside rear view mirrors, and all side windows.
- Clear all snow and ice from the hood and air inlet in the cowl grill to improve heater and defroster efficiency and to reduce the probability of fogging up the inside of the windshield.

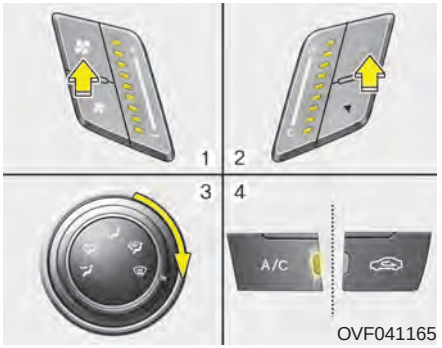

Manual climate control system

To defog inside windshield

1. Set the fan speed to the desired position.
2. Select desired temperature.
3. Select the position.
4. The outside (fresh) air will be selected automatically. If the position is selected, air conditioning (if equipped) will also be selected automatically.

If the air conditioning and/or outside (fresh) air position are not selected automatically, press the corresponding button manually.

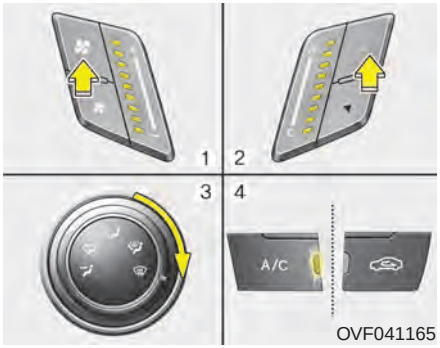

OVF041165

To defrost outside windshield

1. Set the fan speed to the highest position.
2. Set the temperature to the hottest position.
3. Select the position.
4. The outside (fresh) air and air conditioning will be selected automatically.

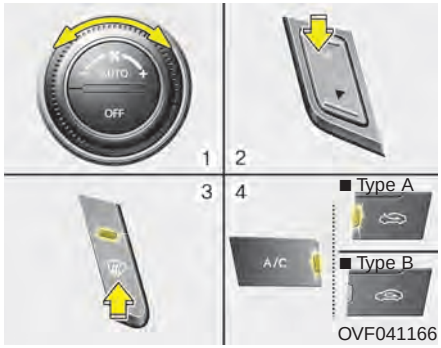

OVF041166

Automatic climate control system

To defog inside windshield

1. Set the fan speed to the desired position.
2. Select desired temperature.
3. Press the button.
4. The air conditioning will turn on according to the detected ambient temperature and outside (fresh) air position will be selected automatically.

If the air conditioning is not selected automatically, adjust the corresponding button manually. If the position is selected, lower fan speed is adjusted to a higher fan speed.

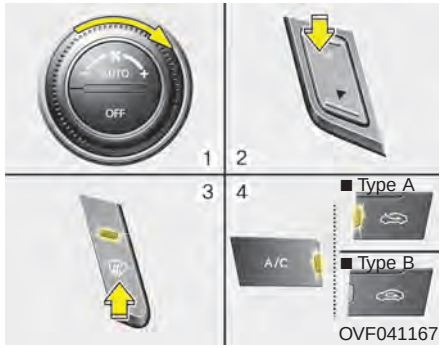

OVF041167

To defrost outside windshield

1. Set the fan speed to the highest position.
2. Set the temperature to the hottest (HIGH) position.
3. Press the button.
4. The air conditioning will turn on according to the detected ambient temperature and outside (fresh) air position will be selected automatically.

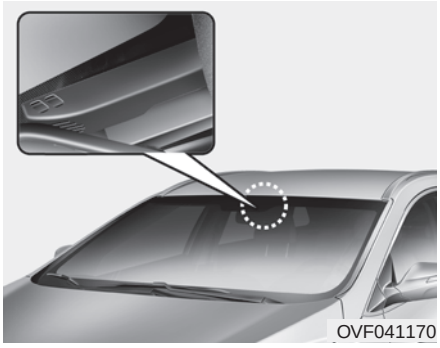

Auto defogging system (Only for automatic climate control system, if equipped)

Auto defogging reduces the possibility of fogging up the inside of the windshield by automatically sensing the moisture of inside the windshield.

The auto defogging system operates when the AUTO mode is on.

This indicator illuminates when the auto defogging system senses the moisture of inside the windshield and operates.

If more moisture is in the vehicle, higher steps operate as follow.

Step 1 : Operating the air conditioning
Step 2 : Outside air position
Step 3 : Blowing air flow toward the windshield
Step 4 : Increasing air flow toward the windshield

If your vehicle is equipped with the auto defogging system, it is automatically activated when the conditions are met. However, if you would like to cancel the auto defogging system, press the front defroster button 4 times within 2 seconds while pressing the AUTO button. The indicator will blink 3 times to notify you that the system is cancelled. To use the auto defogging system again, follow the procedures mentioned above.

If the battery has been disconnected or discharged, it resets to the auto defogging status.

✻ NOTICE

If the A/C off is manually selected while the auto defogging system is on, the auto defogging indicator will blink 3 times to give notice that the A/C off can not be selected.

⚠ CAUTION

Do not remove the sensor cover located on the upper end of the driver side windshield glass. Damage to the system parts could occur and may not be covered by your vehicle warranty.

STORAGE COMPARTMENT

⚠ CAUTION

- ***To avoid possible theft, do not leave valuables in the storage compartment.***
- ***Always keep the storage compartment covers closed while driving. Do not attempt to place so many items in the storage compartment that the storage compartment cover can not close securely.***

⚠ WARNING - Flammable materials

Do not store cigarette lighters, propane cylinders, or other flammable/explosive materials in the vehicle. These items may catch fire and/or explode if the vehicle is exposed to hot temperatures for extended periods.

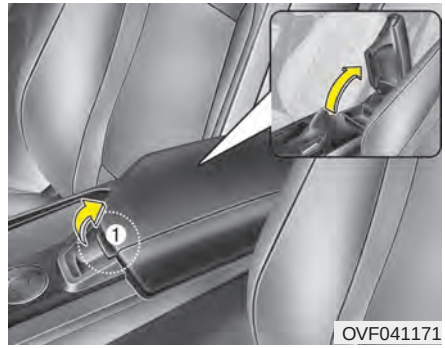

OVF041171

Center console storage

To open the center console storage, push the lever (1) and then lift up the cover.

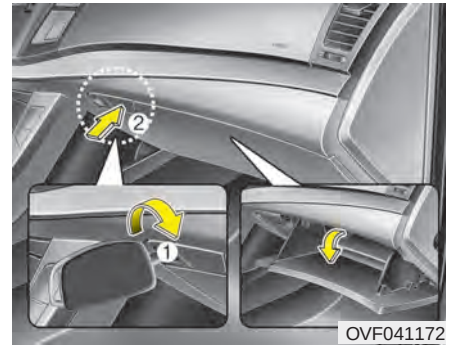

OVF041172

Glove box

The glove box can be locked and unlocked with a key. (1)

To open the glove box, push the button (2) and the glove box will automatically open. Close the glove box after use.

⚠ WARNING

To reduce the risk of injury in an accident or sudden stop, always keep the glove box door closed while driving.

⚠ CAUTION

Do not keep food in the glove box for a long time.

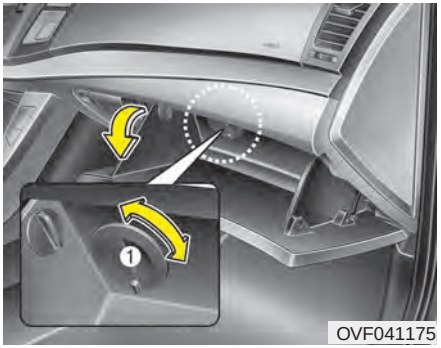

OVF041175

Cool box (if equipped)

You can keep beverage cans or other items cool in the glove box.

1. Turn on the air conditioning.
2. Slide the open/close lever (1) of the vent installed in the glove box to the open position.
3. When the cool box is not used, slide the lever (1) to the closed position.

✻ NOTICE

If some items in the cool box block the vent, the cooling effectiveness of the cool box is reduced.

⚠ WARNING

Do not put perishable food in the cool box because it may not maintain the necessary consistent temperature to keep the food fresh.

OVF041173

Sunglass holder

To open the sunglass holder, press the cover and the holder will slowly open. Place your sunglasses in the compartment door with the lenses facing out. Push to close.

⚠ WARNING

- **Do not keep objects except sunglasses inside the sunglass holder. Such objects can be thrown from the holder in the event of a sudden stop or an accident, possibly injuring the passengers in the vehicle.**
- **Do not open the sunglasses holder while the vehicle is moving. The rear view mirror of the vehicle can be blocked by an open sunglass holder.**

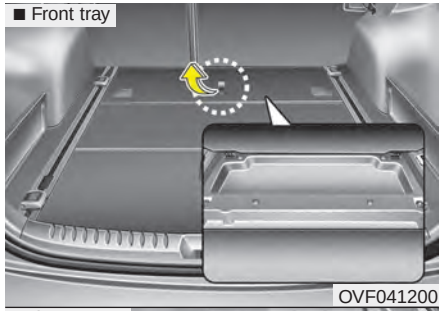

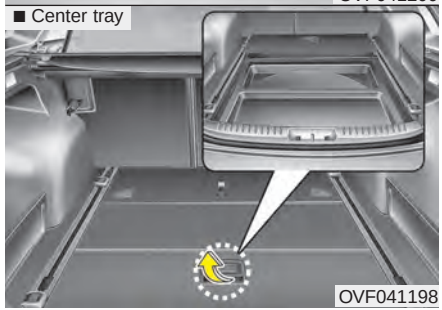

Luggage tray

You can place a first aid kit, a reflector triangle (front tray), tools, etc. in the box for easy access.

- Grasp the handle on the top of the cover and lift it.

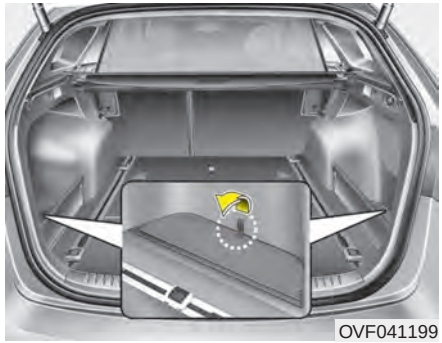

Luggage side tray

The luggage side tray can be used for storing small items.

- To open the cover, pull up the handle and lift the cover.

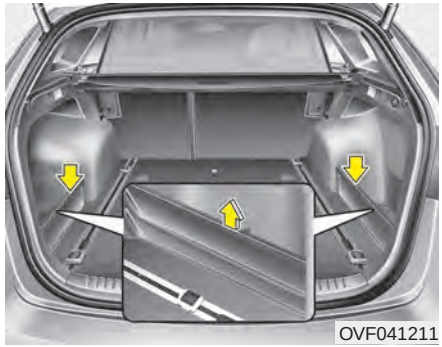

Luggage side partition

✻ NOTICE

The luggage side partitions can be removed to store long items in the luggage compartment.

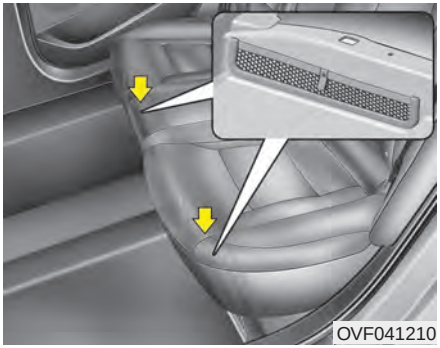

Rear seat floor pocket (if equipped)

⚠ WARNING

Do not put heavy or sharp objects in the pockets. In an accident they could come loose from the pocket and injure vehicle occupants.

INTERIOR FEATURES

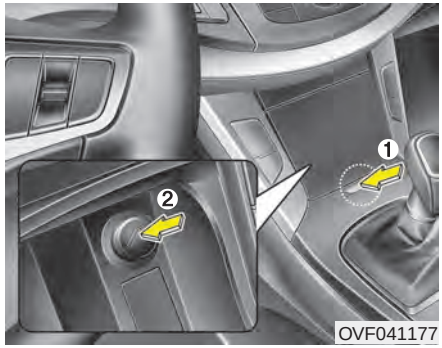

OVF041177

Cigarette lighter (if equipped)

For the cigarette lighter to work, the ignition switch must be in the ACC position or the ON position.

To use the cigarette lighter:

1. Open the cover by pressing the switch.
2. Push the lighter all the way into the socket.

When the element has heated, the lighter will pop out to the "ready" position.

If it is necessary to replace the cigarette lighter, use only a genuine HYUNDAI replacement or its approved equivalent.

⚠ WARNING

- **Holding the lighter in after it is heated will cause it to overheat.**
- **If the lighter does not pop out within 30 seconds, remove it to prevent overheating.**

⚠ CAUTION

Only a genuine HYUNDAI lighter should be used in the cigarette lighter socket. The use of plug-in accessories (shavers, hand-held vacuums, and coffee pots, for example) may damage the socket or cause electrical failure.

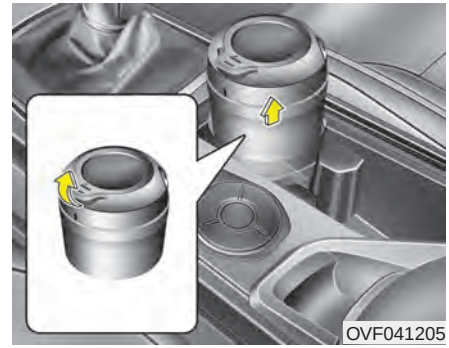
OVF041205

Ashtray (if equipped)

To use the ashtray, open the cover.
To clean or empty the ashtray, pull it out.

⚠ WARNING - Ashtray use

- **Do not use the vehicle's ashtray as a waste receptacle.**
- **Putting lit cigarettes or matches in an ashtray with other combustible materials may cause a fire.**

⚠ CAUTION

When cleaning spilled liquid, do not dry the cup holder at high temperatures. This may damage the chrome part of the cup holder.

Cup holder

Cups or small beverage cans may be placed in the cup holders.

⚠ WARNING - Hot liquids

- **Do not place uncovered cups of hot liquid in the cup holder while the vehicle is in motion. If the hot liquid spills, you burn yourself. Such a burn to the driver could lead to loss of control of the vehicle.**
- **To reduce the risk of personal injury in the event of sudden stop or collision, do not place uncovered or unsecured bottles, glasses, cans, etc., in the cup holder while the vehicle is in motion.**

⚠ WARNING

Keep cans and bottles out of direct sunlight. Placing them in a hot vehicle can cause them to explode.

■ Front

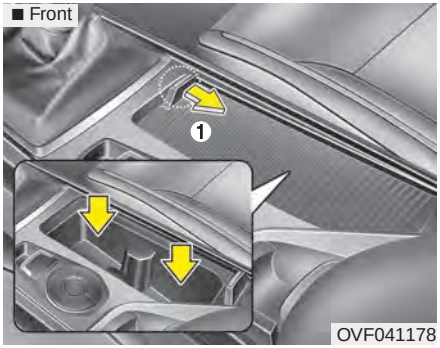

OVF041178

Front

To use the cup holder, open the cover. (1)

■ Rear

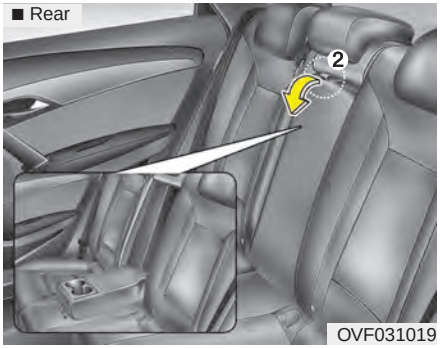

OVF031019

Rear

To use the cup holder, pull down the armrest. (2)

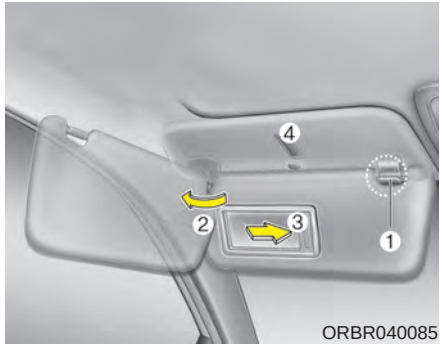

ORBR040085

Sunvisor

Use the sunvisor to shield direct light through the front or side windows.

To use the sunvisor, pull it downward.

To use the sunvisor for the side window, pull it downward, unsnap it from the bracket (1) and swing it to the side (2).

To use the vanity mirror, pull down the visor and slide the mirror cover (3).

The vanity mirror light comes on. (if equipped)

The ticket holder (4) is provided for holding a tollgate ticket. (if equipped)

⚠ WARNING

For your safety, do not block your view when using the sunvisor.

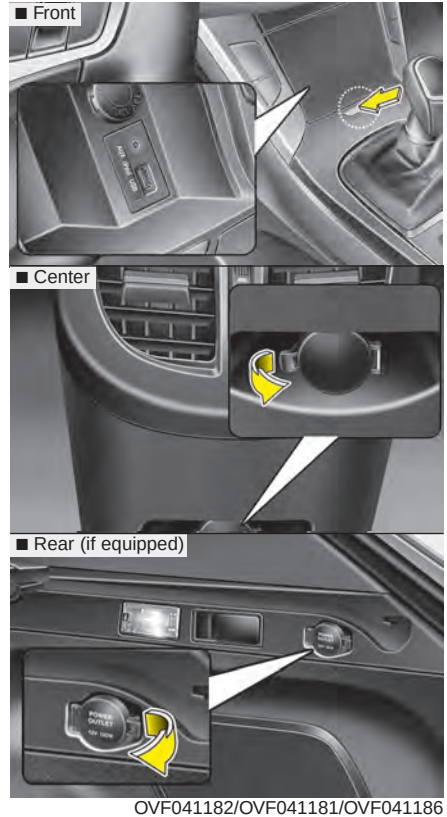

OVF041182/OVF041181/OVF041186

Power outlet

The power outlet is designed to provide power for mobile telephones or other devices designed to operate with vehicle electrical systems. The devices should draw less than 10 amps with the engine running.

⚠ CAUTION

- ***Use power outlet only when the engine is running and remove the accessory plug after use. Using the accessory plug for prolonged periods of time with the engine off could cause the battery to discharge.***
- ***Only use 12V electric accessories which are less than 10A in electric capacity.***
- ***Adjust the air-conditioner or heater to the lowest operating level when using the power outlet.***
- ***Close the cover when not in use.***
- ***Some electronic devices can cause electronic interference when plugged into a vehicle's power outlet. These devices may cause excessive audio static and malfunctions in other electronic systems or devices used in your vehicle.***

⚠ WARNING

Do not put a finger or a foreign element (pin, etc.) into a power outlet and do not touch with a wet hand. You may get electrocuted or fire may occur.

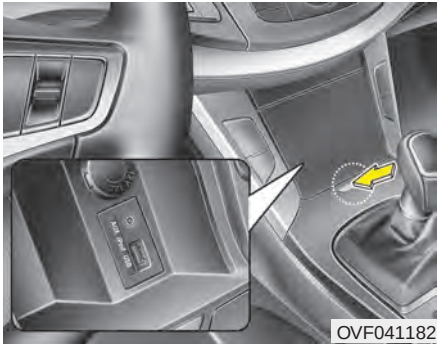

OVF041182

Aux, USB and iPod (if equipped)

If your vehicle has an aux and/or USB(universal serial bus) port or iPod port, you can use an aux port to connect audio devices and an USB port to plug in an USB and also an iPod port to plug in an iPod.

✻ NOTICE

When using a portable audio device connected to the power outlet, noise may occur during playback. If this happens, use the power source of the portable audio device.

✻ iPod® is a trademark of Apple Inc.

Clothes hanger

⚠ CAUTION

- ***Do not hang heavy clothes, since those may damage the hook.***
- ***Be careful when opening and closing the doors. Clothes, etc. may get caught between the door gap.***

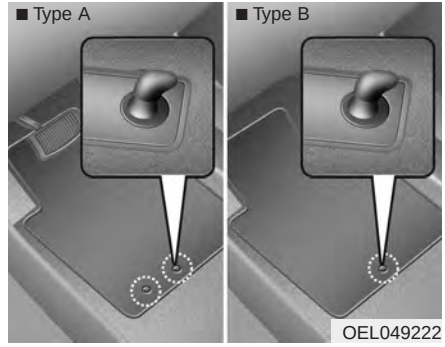

Floor mat anchor(s) (if equipped)

When using a floor mat on the front floor carpet, make sure it attaches to the floor mat anchor(s) in your vehicle. This keeps the floor mat from sliding forward.

⚠ WARNING

The following must be observed when installing ANY floor mat to the vehicle.

- **Ensure that the floor mats are securely attached to the vehicle's floor mat anchor(s) before driving the vehicle.**
- **Do not use ANY floor mat that cannot be firmly attached to the vehicle's floor mat anchors.**
- **Do not stack floor mats on top of one another (e.g. all-weather rubber mat on top of a carpeted floor mat). Only a single floor mat should be installed in each position.**

IMPORTANT – Your vehicle was manufactured with driver's side floor mat anchors that are designed to securely hold the floor mat in place. To avoid any interference with pedal operation, HYUNDAI recommends that only the HYUNDAI floor mat designed for use in your vehicle be installed.

OVF041212

Luggage net (holder) (if equipped)

To keep items from shifting in the cargo area, you can use the four holders located in the cargo area to attach the luggage net.

If necessary, contact your authorized HYUNDAI dealer to obtain a luggage net.

✻ NOTICE

Vehicles equipped with a luggage rail system may use the shackles to hook the luggage net.

⚠ CAUTION

To prevent damage to the goods or the vehicle, care should be taken when carrying fragile or bulky objects in the luggage compartment.

⚠ WARNING

To avoid eye injury, DO NOT overstretch the luggage net. ALWAYS keep your face and body out of the luggage net's recoil path. DO NOT use the luggage net when the strap has visible signs of wear or damage.

OVF041192

Barrier net (if equipped)

When you load cargo on the rear seat or rear cargo area, you must install the barrier net behind the front seatback or rear seatback.

It is designed to help protect the heads of the occupants by preventing objects from flying forward in frontal collisions.

There are four hook holders on both side of the headliner over the headrests for upper side fixation and on the floor behind the rear seats for lower side fixation.

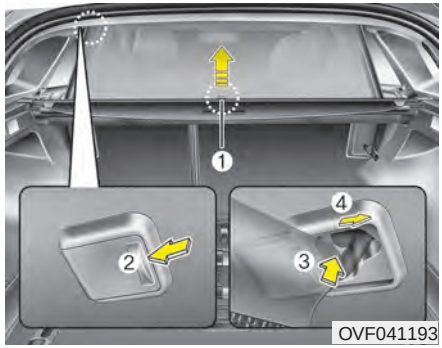

To use the barrier net

1. Pull up the net by the handle in the center(1).
2. Open the cover(2).
3. Insert the hook into the large hole(3) until it reaches the very top.
4. Then secure it by sliding it into the small hole(4).
5. Hold the hooked side and then with the other hand, hook the other side of the net.

⚠ CAUTION

Be careful not the scratch the side panel when inserting the hook into the hole.

⚠ WARNING

- **Do not put passengers in the rear seat or cargo area behind the barrier net.**
- **Do not put passenger in the rear center seat when the barrier net is installed behind the rear seats. The barrier net may interfere with use of the rear center safety belt.**
- **Do not load cargo in the area higher than the barrier net's upper end.**
- **Do not load heavy cargo in the area higher than the seatback to avoid accident even if the barrier net is installed.**
- **Do not load cargo which has sharp edge that can pass through the barrier net.**
- **Do not apply excessive force to the barrier net by hanging on to the net or by suspending heavy cargo and so on.**

When the barrier net is not in use :

1. Remove the hook by pulling it through the large holes.
2. Slide the net down.

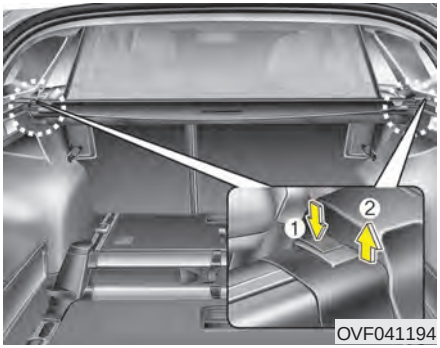

OVF041194

To remove the barrier net

1. Press the lock release button(1) located at the end of both sides.
2. While pressing the button(1), pull out the barrier net(2).

✻ NOTICE

The cargo security screen must be removed first to remove the barrier net.

OVF041195

Cargo security screen (if equipped)

Use the cargo security screen to hide items stored in the cargo area.

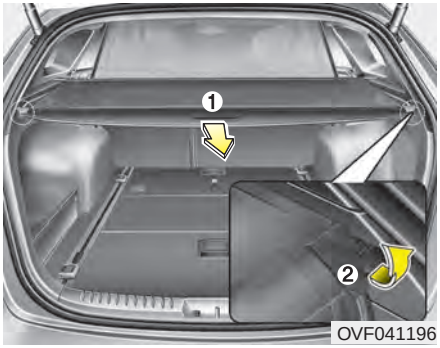

OVF041196

To use the cargo security screen

1. Pull the cargo security screen towards the rear of the vehicle by the handle (1).
2. Insert the guide pin into the guide (2).

✻ NOTICE

Pull out the cargo security screen with the handle in the center to prevent the guide pin from falling out of the guide.

When the cargo security screen is not in use:

1. Push down the center of the cargo security screen (approximately 70 degree).
2. The cargo security screen will automatically slide back in.

✻ NOTICE

The cargo security screen may not automatically slide back in if the cargo security screen is not fully pulled out. Fully pull it out and then let go.

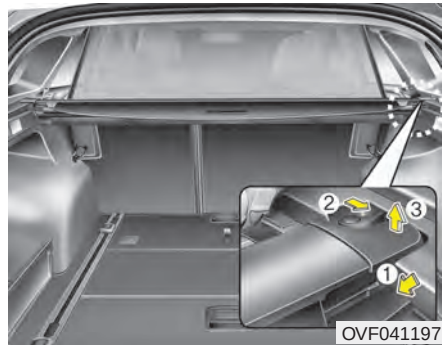

To remove the cargo security screen

1. Push in the guide pin(1).
2. Push the lever (2) towards the rear of the vehicle.
3. While pushing the lever, pull out the cargo security screen (3).

⚠ WARNING

- **Do not place objects on the cargo security screen. Such objects may be thrown about inside the vehicle and possibly injure vehicle occupants during an accident or when braking.**
- **Never allow anyone to ride in the luggage compartment. It is designed for luggage only.**
- **Maintain the balance of the vehicle and locate the weight as forward as possible.**

⚠ CAUTION

Since the cargo security screen may be damaged or malformed, do not put luggage on it when it is used.

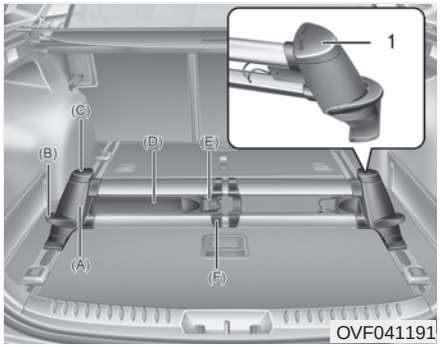

Luggage rail system

The luggage rail system may prevent the luggage from sliding around in the luggage compartment.

Build in segmentation bar

- Put both pillars (A) from the segmentation bar in the openings from the rail.
- To move the segmentation bar, put your hand on the side of the pillar and push down the lever arm (B).
- Make sure the pillars click into place.
- To release the belt, turn the upper element (C) to the left (1) or right until it clicks.
- Now you can pull the belt (D) and secure your luggage by putting the belt around the luggage and put the hook (E) into the middle of the segmentation bar (F).
- For bulky luggage, you can hook both hooks into each other.
- To make sure the belt locks, put the upper element (C) back into the lock position (1).

⚠ CAUTION

- ***The segmentation bar must be mounted and demounted with both pillars simultaneously.***
- ***Max. load: 30 kg with one belt***
  40 kg with two belts

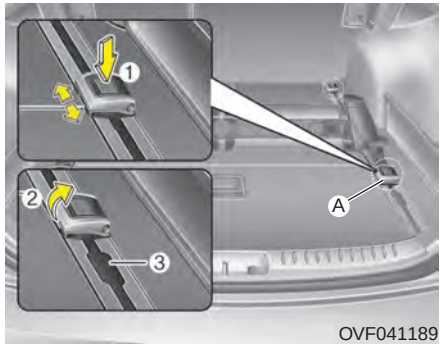

Applying the shackle on the guide rail

- Put the shackle (A) in the position where the shackle is put in the rail (3).
- To move the shackle, press the button (1) and move the shackle along the rail.
- Make sure the shackle is clicked into place.
- To fix the luggage, pull up the hook (2) in the middle cargo bay.
- Now you can mount e.g. belt to fix the luggage in the hook.
- The shackle cannot be used in the position where the shackle is put in and out of the rail (3).

⚠ CAUTION

Tensile force : max. 150 kgf. for 1 shackle

EXTERIOR FEATURES

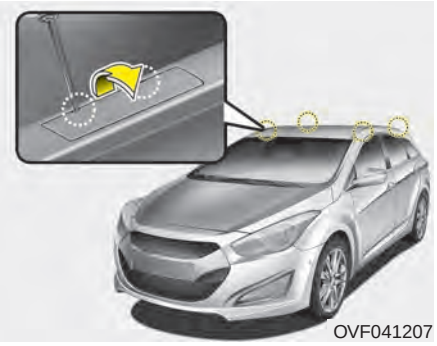
OVF041207

Mounting bracket for roof carrier

To install or remove a roof carrier, you can use the mounting bracket and cover on the roof.

When you install a roof carrier, use the following procedure.

1. Insert a slim tool(flat blade driver) into the slot and pry open the cover.

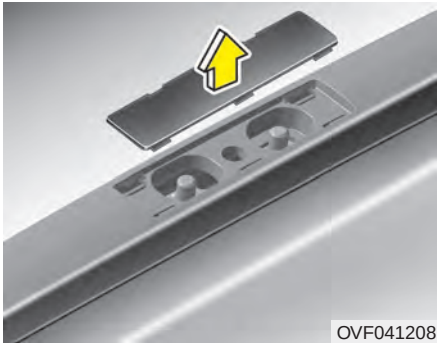
OVF041208

2. After using the roof carrier, install the cover back on the roof in the reverse order.

⚠ WARNING

Use a coin or flat blade driver when you remove the roof carrier cover.

If you use your fingernail, it may damage your fingernail.

✻ NOTICE

If the vehicle is equipped with a sunroof, be sure not to position cargo onto the roof in such a way that it could interfere with sunroof operation.

⚠ CAUTION

- ***When carrying cargo on the roof, take the necessary precautions to make sure the cargo does not damage the roof of the vehicle.***
- ***When carrying large objects on the roof, make sure they do not exceed the overall roof length or width.***

⚠ WARNING

- **The vehicle center of gravity will be higher when items are loaded onto the roof. Avoid sudden starts, braking, sharp turns, abrupt maneuvers or high speeds that may result in loss of vehicle control or rollover resulting in an accident.**
- **Always drive slowly and turn corners carefully when carrying items on the roof. Severe wind updrafts, caused by passing vehicles or natural causes, can cause sudden upward pressure on items loaded on the roof. This is especially true when carrying large, flat items such as wood panels or mattresses. This could cause the items to fall off the roof and cause damage to your vehicle or others around you.**
- **To prevent damage or loss of cargo while driving, check frequently before or while driving to make sure the items on the roof are securely fastened.**

AUDIO SYSTEM

✻ NOTICE

If you install an aftermarket HID head lamp, your vehicle's audio and electronic device may malfunction.

Antenna

Roof antenna

Your car uses a roof antenna to receive both AM and FM broadcast signals. This antenna is a removable type. To remove the antenna, turn it counterclockwise. To install the antenna, turn it clockwise.

⚠ CAUTION

- ***Before entering a place with a low height clearance or a car wash, remove the antenna by rotating it counterclockwise. If not, the antenna may be damaged.***
- ***When reinstalling your antenna, it is important that it is fully tightened and adjusted to the upright position to ensure proper reception. But it could be removed when parking the vehicle or when loading cargo on the roof rack.***
- ***When cargo is loaded on the roof rack, do not place the cargo near the antenna pole to ensure proper reception.***

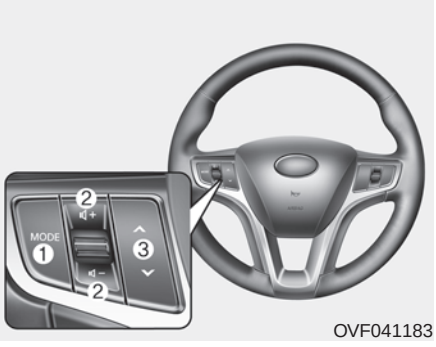

OVF041183

Audio remote control (if equipped)

The steering wheel audio remote control button is installed to promote safe driving.

⚠ CAUTION

Do not operate the audio remote control buttons simultaneously.

MODE (1)

Press the button to select Radio or CD (compact disc).

VOL (+ / -) (2)

- Push up the lever to increase volume.
- Push down the lever to decrease volume.

SEEK (∧ / ∨) (3)

The SEEK/PRESET button has different functions base on the system mode. For the following functions the button should be pressed for 0.8 seconds or more.

RADIO mode

It will function as the AUTO SEEK select button.

CDP mode

It will function as the FF/REW button.

CDC mode

It will function as the DISC UP/DOWN button.

If the SEEK button is pressed for less than 0.8 second, it will work as follows in each mode.

RADIO mode

It will function as the PRESET STATION select buttons.

CDP mode

It will function as the TRACK UP/DOWN button.

CDC mode

It will function as the TRACK UP/DOWN button.

Detailed information for audio control buttons are described in the following pages in this section.

FM radio reception

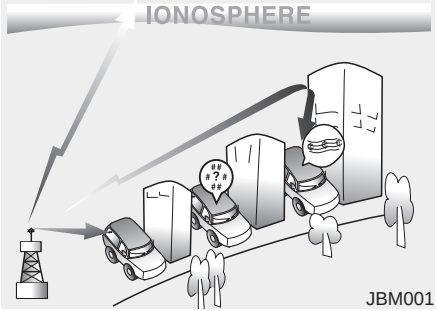

AM radio reception

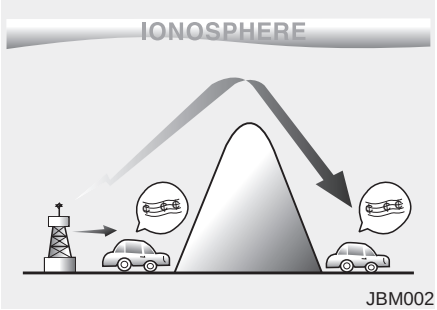

FM radio station

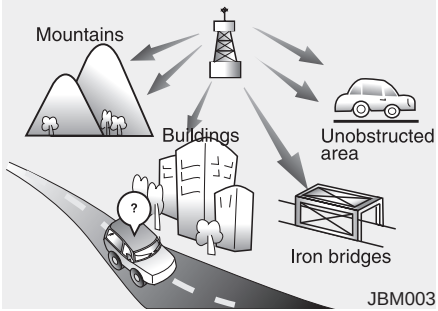

How vehicle audio works

AM and FM radio signals are broadcast from transmitter towers located around your city. They are intercepted by the radio antenna on your vehicle. This signal is then received by the radio and sent to your vehicle speakers.

When a strong radio signal has reached your vehicle, the precise engineering of your audio system ensures the best possible quality reproduction. However, in some cases the signal coming to your vehicle may not be strong and clear. This can be due to factors such as the distance from the radio station, closeness of other strong radio stations or the presence of buildings, bridges or other large obstructions in the area.

AM broadcasts can be received at greater distances than FM broadcasts. This is because AM radio waves are transmitted at low frequencies. These long, low frequency radio waves can follow the curvature of the earth rather than travelling straight out into the atmosphere. In addition, they curve around obstructions so that they can provide better signal coverage.

FM broadcasts are transmitted at high frequencies and do not bend to follow the earth's surface. Because of this, FM broadcasts generally begin to fade at short distances from the station.

Also, FM signals are easily affected by buildings, mountains, or other obstructions. These can result in certain listening conditions which might lead you to believe a problem exists with your radio. The following conditions are normal and do not indicate radio trouble:

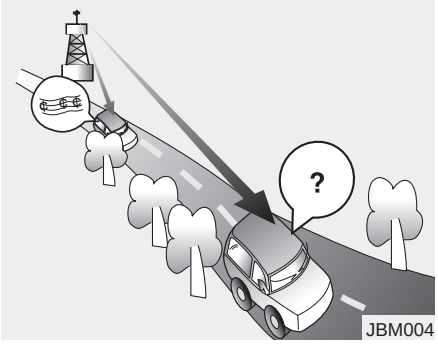

JBM004

- Fading - As your vehicle moves away from the radio station, the signal will weaken and sound will begin to fade. When this occurs, we suggest that you select another stronger station.
- Flutter/Static - Weak FM signals or large obstructions between the transmitter and your radio can disturb the signal causing static or fluttering noises to occur. Reducing the treble level may lessen this effect until the disturbance clears.

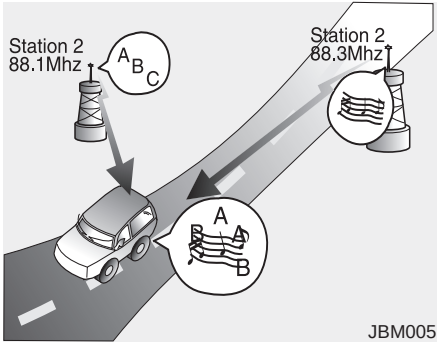

JBM005

- Station Swapping - As a FM signal weakens, another more powerful signal near the same frequency may begin to play. This is because your radio is designed to lock onto the clearest signal. If this occurs, select another station with a stronger signal.
- Multi-Path Cancellation - Radio signals being received from several directions can cause distortion or fluttering. This can be caused by a direct and reflected signal from the same station, or by signals from two stations with close frequencies. If this occurs, select another station until the condition has passed.

Using a cellular phone or a two-way radio

When a cellular phone is used inside the vehicle, noise may be produced from the audio equipment. This does not mean that something is wrong with the audio equipment. In such a case, use the cellular phone at a place as far as possible from the audio equipment.

⚠ CAUTION

When using a communication system such a cellular phone or a radio set inside the vehicle, a separate external antenna must be fitted. When a cellular phone or a radio set is used with an internal antenna alone, it may interfere with the vehicle's electrical system and adversely affect safe operation of the vehicle.

⚠ WARNING

Do not use a cellular phone while driving. Stop at a safe location to use a cellular phone.

Care of disc (if equipped)

- If the temperature inside the car is too high, open the car windows for ventilation before using your car audio.
- It is illegal to copy and use MP3/WMA files without permission. Use CDs that are created only by lawful means.
- Do not apply volatile agents such as benzene and thinner, normal cleaners and magnetic sprays made for analogue disc onto CDs.
- To prevent the disc surface from getting damaged. Hold and carry CDs by the edges or the edges of the center hole only.
- Clean the disc surface with a piece of soft cloth before playback (wipe it from the center to the outside edge).
- Do not damage the disc surface or attach pieces of sticky tape or paper onto it.
- Make sure objects other than CDs are not inserted into the CD player (Do not insert more than one CD at a time).
- Keep CDs in their cases after use to protect them from scratches or dirt.
- Depending on the type of CD-R/CD-RW CDs, certain CDs may not operate normally according to manufacturing companies or making and recording methods. In such circumstances, if you still continue to use those CDs, they may cause the malfunction of your car audio system.

✻ NOTICE - Playing an Incompatible Copy Protected Audio CD

Some copy protected CDs, which do not comply with the international audio CD standards (Red Book), may not play on your car audio. Please note that if you try to play copy protected CDs and the CD player does not perform correctly the CDs maybe defective, not the CD player.

■ **CD Player : AC100DFG/AC110DFG**

■ **CD Changer : AC600DFG/AC610DFG**

✻There will be no Bluetooth logo if the Bluetooth® feature is not supported.

VF_AC100DFG_GEN / VF_AC600DFG_GEN

VF_GEN_RADIO

Using RADIO, SETUP, VOLUME and AUDIO CONTROL

1. FM Button

Turns to FM mode and toggles FM1and FM2 when the button is pressed each time.

2. AM Button

Pressing the AM button selects the AM band. AM Mode is displayed on the LCD.

3. SEEK Button

- When the SEEK TRACK button is pressed, it increases the band frequency to automatically select channel. Stops at the previous frequency if no channel is found.
- When the SEEK TRACK button is pressed, it reduces the band frequency to automatically select channel. Stops at the previous frequency if no channel is found.

4. POWER Button & VOL Knob

- Turns the audio system on/off when the ignition switch is on ACC or ON.
- If the knob is turned clockwise/counter-clockwise, the volume will increase /decrease.

VF_GEN_RADIO

5. PRESET Buttons

- Press 1 ~ 6 buttons less than 0.8 seconds to play the station saved in each button.
- Press 1 ~ 6 than 0.8 seconds or longer to save the current station to the respective button with a beep.

6. AST Button (AUTO STORE)

When the button is pressed, it automatically selects and saves channels with high reception rate to PRESET buttons 1 ~ 6 and plays the channel saved in PRESET1. If no channel is saved after AST, it will play the previous channel.

- Saves only to the Preset memory (1)~(6) of FMA or AMA mode in some models.

7. DARK Button

Turns the LCD Display & Backlight ON/OFF when DARK button is pressed.

8. SETUP Button

Press the SETUP button to convert to Setup Mode. In the Setup Mode screen, select the mode you want to set by pressing the TUNE knob. Press ENTER button to enter detailed setup mode. The Setup Mode screens are each different according to the Bluetooth, External Amp option selections.

- SCROLL

This function is used to display characters longer than the LCD text display and can be turned On/Off through the sound quality control knob.

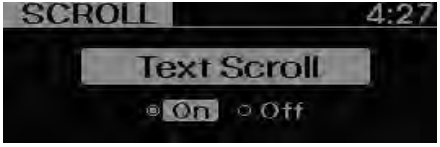

- SDVC (Speed Dependent Volume Control)

This function automatically adjusts the volume level according to the speed of the vehicle and can be turned On/Off through the sound quality control knob.

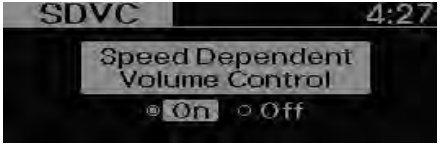

• MEDIA

Select default display of MP3 play information. “Folder/File” or “Artist/Title” can be selected.

• Return(⮌)

This function displays the previous MODE screen.

• CLOCK

Select this item to enter CLOCK setup mode.

Adjust the hour and press the ENTER button to set. Adjust the minute and press the ENTER button to complete and exit from clock adjustment mode. Pressing the SETUP button more than 0.8 seconds while in power off, screen will allow the user to make immediately adjustments to the clock.

• PHONE (if equipped)

Select this item to enter PHONE setup mode. Refer to “BLUETOOTH PHONE OPERATION” section for detailed information.

❊ “PHONE” menu is not available if the audio does not support Bluetooth features.

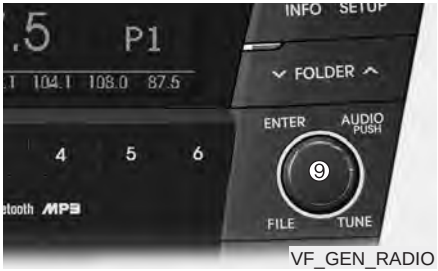

VF_GEN_RADIO

9. TUNE & AUDIO Knob

Within the screen displayed after first pressing the TUNE knob, turn the TUNE knob to select the mode.

The modes will change in order of BASS ↔ MIDDLE ↔ TREBLE ↔ FADER ↔ BALANCE.

• BASS Control

Press BASS and turn the TUNE knob to adjust the bass setting. In this state, turn the TUNE knob clockwise to increase the bass and counter-clockwise to decrease the bass. (Based on bass frequency band, the range of adjustment is max +10/min-10.)

BASS -1 ← BASS 0 → BASS +1

• MIDDLE Control

Press MIDDLE and turn the TUNE knob to adjust the middle setting. In this state, turn the TUNE knob clockwise to increase the middle and counter-clockwise to decrease the middle. (Based on middle frequency band, the range of adjustment is max +10/min-10.)

MIDDLE -1 ← MIDDLE 0 → MIDDLE +1

• TREBLE Control

Press TRBLE and turn the TUNE knob to adjust the treble setting. In this state, turn the TUNE knob clockwise to increase the treble and counter-clockwise to decrease the treble. (Based on treble frequency band, the range of adjustment is max +10/min-10.)

TREBLE -1 ← TREBLE → TREBLE

• FADER Control

Press FADER and turn the TUNE knob clockwise and counter-clockwise to adjust the front/rear volume levels. In this state, turn the TUNE knob clockwise to increase the front speaker volume and counter-clockwise to increase the rear speaker volume. (The front/rear can each be adjusted to F=10/R=10.)

FADER F=1 ← FADER F=R → FADER R=1

• BALANCE Control

Press BALANCE and turn the TUNE knob to adjust the left/right volume setting. In this state, turn the TUNE knob clockwise to decrease the left speaker volume and counter-clockwise to decrease the right speaker volume.

(The left/right can each be adjusted to L=10/R=10.)

VF_GEN_CD

Using CD Player

1. CD Button

If the CD is loaded, turns to CD mode. If no CD, it displays “No Media” for 3 seconds and returns to the previous mode.

2. TRACK Button

- Push SEEK TRACK button for less than 0.8 second to play from the beginning of current song.
- Push SEEK TRACK button for less than 0.8 second and press again within 1 seconds to play the previous song.
- Push SEEK TRACK button for 0.8 or longer to initiate reverse direction high speed sound search of current song.
- Push SEEK TRACK button for less than 0.8 second to play the next song.
- Push SEEK TRACK button for 0.8 or longer to initiate high speed sound search of current song.

VF_AC100DFG_CDP

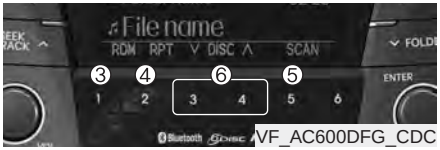

VF_AC600DFG_CDC

3. 1 Button (RANDOM)

Press this button for less than 0.8 seconds to activate ‘RDM’ mode and more than 0.8 seconds to activate ‘ALL RDM’ mode.

- RDM : Only files/tracks in a folder/disc are played back in random sequence.
- ALL RDM (MP3/WMA Only) : All files in a disc are played back in random sequence.

4. 2 Button (REPEAT)

Press this button for less than 0.8 second to activate 'RPT' mode and more than 0.8 seconds to activate 'FLD.RPT' mode.

- RPT : Only a track(file) is repeatedly played back.
- FLD.RPT (MP3/WMA Only) : Only files in a folder are repeatedly played back.

5. 5 Button (SCAN)

Play each song in the CD for 10 seconds. To cancel SCAN Play, press this button again.

6. DISC Button (CD changer : AC600 DFG/AC610DFG)

- Preset 3 button changes disc to the previous disc.
- Preset 4 button changes disc to the next disc.

7. INFO Button

Displays the information of the current CD TRACK(FILE) as below when the button is pressed each time.

- Audio CD : Disc Title, Disc Artist, Track Title, Track Artist, Total Track
- MP3 CD : File Name, Title, Artist, Album, Folder, Total File
  (not displayed if the information is not available on the DISC.)

8. FOLDER Button

- Press ∨FOLDER button to move to child folder of the current folder and display the first song in the folder. Press TUNE knob to move to the fold er displayed. It will play the first song in the folder.
- Press FOLDER∧ button to move to parent folder of the current folder and display the first song in the folder. Press TUNE knob to move to the fold-er displayed.

9. TUNE Knob & ENTER Button

Turn this knob clockwise to display the songs next to the currently played song. Turn this knob counterclockwise to dis-play the songs before the currently played song. Press the button to skip and play the selected song.

VF_AC100DFG_CDP

VF_AC600DFG_CDC

10. CD Eject Button

Push ▲ button for less than 0.8 seconds to eject the CD during CD playback. This button is enabled when ignition switch is off.

- ALL EJECT (CD Changer : AC600DFG/ AC610DFG)

Press this button for more than 0.8 seconds to eject all discs inside the deck in respective order.

11. CD Slot

- Insert a CD with the label side up and gently push in. When the ignition switch is in ACC or ON and audio power off, audio power will automatically turn on if a CD is loaded.
- This CDP supports only 12cm CD.
- If VCD, Data CD are loaded, "Reading Error" message will appear and CD will be ejected.

12. CD Indicator icon (CD Player : AC100DFDG/AC110DFG)

When car ignition switch is in ACC or ON and if a CD is loaded, this indicator icon is on. If the CD is ejected the icon is off.

⚠ CAUTION

Do not insert a CD if CD indicator is lit.

13. LOAD Button (CD Changer : AC600DFDG/AC610DFG)

Push LOAD button to load CDs to available CDC deck (from 1~6). Push LOAD button for more than 2 seconds to load into all available decks. The last CD will play. 10 seconds idle status will disable loading process.

NOTE:

Order of playing files (folders) :

1. Song playing order : ① to ⑭ sequentially.

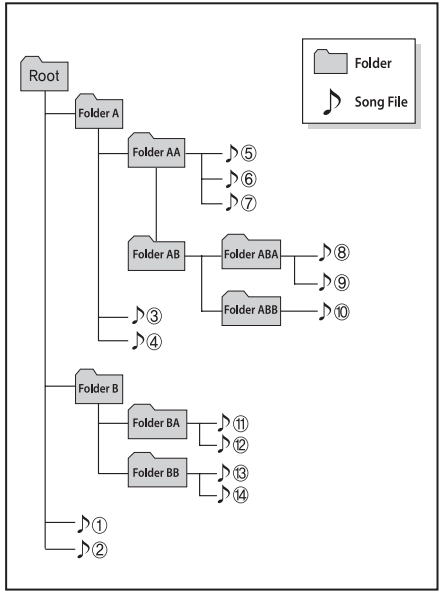

2. Folder playing order :

❋ If no song file is contained in the folder, that folder is not displayed.

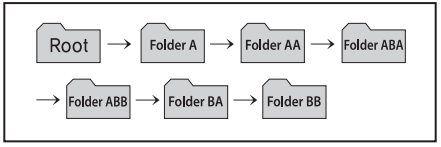

VF_GEN_USB

Using USB device

1. AUX Button (USB)

If USB is connected, it switches to the USB mode from the other mode to play the song files stored in the USB. If no CD and auxiliary device is not connected, it displays "No Media" for 3 seconds and returns to the previous mode.

2. TRACK Button

- Press the SEEK TRACK button for less than 0.8 seconds to play from the beginning of the song currently played.
- Press the SEEK TRACK button for less than 0.8 seconds and press it again within 1 second to move to and play the previous song.
- Press the SEEK TRACK button for 0.8 seconds or longer to play the song in reverse direction in fast speed.
- Press the SEEK TRACK button for less than 0.8 seconds to move to the next song.
- Press the SEEK TRACK button for 0.8 seconds or longer to play the song in forward direction in fast speed

VF_GEN_USB

3. 1 Button (RANDOM)

Press this button for less than 0.8 seconds to activate ‘RDM’ mode and more than 0.8 seconds to activate ‘A.RDM’ mode.

- RDM : Only files in a folder are played back in random sequence.
- A.RDM : All files in a USB memory are played back in random sequence.

4. 2 Button (REPEAT)

Press this button for less than 0.8 seconds to activate ‘RPT’ mode and more than 0.8 seconds to activate ‘FLD.RPT’ mode.

- RPT : Only a current file is repeatedly played back.
- ‘FLD.RPT’ : All files in a folder are repeatedly played back.

5. 5 Button (SCAN)

Plays each song in the USB device for 10 seconds. To cancel SCAN play, press this button again.

VF_GEN_USB

6. INFO Button

Displays the information of the file currently played in the order of File Name, Title, Artist, Album, Folder, Total File, Normal Display.

(Displays no information if the file has no song information.)

VF_GEN_USB

7. FOLDER Button

- Press ∨FOLDER button to move to child folder of the current folder and display the first song in the folder.

  Press TUNE knob to move to the folder displayed. It will play the first song in the folder.
- Press FOLDER∧ button to move to parent folder display the first song in the folder.

  Press TUNE knob to move to the folder displayed.

8. TUNE Knob & ENTER Button

Turn this knob clockwise to display the songs next to the currently played song. Turn this knob counterclockwise to display the songs before the currently played song. Press the button to skip and play the selected song.

⚠ CAUTION IN USING USB DEVICE

- *To use an external USB device, make sure the device is not connected when starting up the vehicle. Connect the device after starting up.*
- *If you start the engine when the USB device is connected, it may damage the USB device. (USB flashdrives are very sensitive to electric shock.)*
- *If the engine is started up or turned off while the external USB device is connected, the external USB device may not work.*
- *It may not play inauthentic MP3 or WMA files.*
  1) *It can only play MP3 files with the compression rate between 8Kbps~320Kbps.*
  2) *It can only play WMA music files with the compression rate between 8Kbps~320Kbps.*
- *Take precautions for static electricity when connecting or disconnecting the external USB device.*

(Continued)

(Continued)

- *An encrypted MP3 PLAYER is not recognizable.*
- *Depending on the condition of the external USB device, the connected external USB device can be unrecognizable.*
- *When the formatted byte/sector setting of External USB device is not either 512BYTE or 2048BYTE, then the device will not be recognized.*
- *Use only a USB device formatted to FAT 12/16/32.*
- *USB devices without USB I/F authentication may not be recognizable.*
- *Make sure the USB connection terminal does not come in contact with the human body or other objects.*
- *If you repeatedly connect or disconnect the USB device in a short period of time, it may break the device.*
- *You may hear a strange noise when connecting or disconnecting a USB device.*

(Continued)

(Continued)

- *If you disconnect the external USB device during playback in USB mode, the external USB device can be damaged or may malfunction. Therefore, disconnect the external USB device when the audio is turned off or in another mode. (e.g, Radio or CD)*
- *Depending on the type and capacity of the external USB device or the type of the files stored in the device, there is a difference in the time taken for recognition of the device.*
- *Do not use the USB device for purposes other than playing music files.*
- *Playing videos through the USB is not supported.*
- *Use of USB accessories such as rechargers or heaters using USB I/F may lower performance or cause trouble.*

(Continued)

(Continued)

- *If you use devices such as a USB hub purchased separately, the vehicle's audio system may not recognize the USB device. In that case, connect the USB device directly to the multimedia terminal of the vehicle.*
- *If the USB device is divided by logical drives, only the music files on the highest-priority drive are recognized by car audio.*
- *Devices such as MP3 Player/ Cellular phone/Digital camera can be unrecognizable by standard USB I/F can be unrecognizable.*
- *Charging through the USB may not be supported in some mobile devices.*

  ❋ A car exclusive cable (provided or sold separately) is required to use the iPod.
- *Some non-standard USB devices (METAL COVER TYPE USB) can be unrecognizable.*
- *Some USB flash memory readers (such as CF, SD, microSD, etc.) or external-HDD type devices can be unrecognizable.*

(Continued)

(Continued)

- *Music files protected by DRM (DIGITAL RIGHTS MANAGEMENT) are not recognizable.*
- *The data in the USB memory may be lost while using this audio. Always back up important data on a personal storage device.*
- *Please avoid using USB memory products which can be used as key chains or cellular phone accessories as they could cause damage to the USB jack. Please make certain only to use plug type connector products as shown below.*

VF_GEN_iPod

Using iPod

❋ iPod is a trademark of Apple Inc.

1. AUX Button (iPod)

If iPod is connected, it switches to the iPod mode from the previous mode to play the song files stored in the iPod.

If there is no iPod connected, then it displays the message "No Media" for 3 seconds and returns to the previous mode.

2. TRACK Button

- Press the SEEK TRACK button for less than 0.8 seconds to play from the beginning of the song currently played.
- Press the SEEK TRACK button for less than 0.8 seconds and press it again within 1 second to move to and play the previous track.
- Press the SEEK TRACK button for 0.8 seconds or longer to play the song in reverse direction in fast speed.
- Press the SEEK TRACK button for less than 0.8 seconds to move to the next track.
- Press the SEEK TRACK button for 0.8 seconds or longer to play the song in forward direction in fast speed.

VF_GEN_iPod

3. 1 Button (RANDOM)

- Press this button for less than 0.8 seconds to shuffle order of all songs in current category. (Song Random)
- Press this button for 0.8 seconds or longer to shuffle order of albums in current category. (Album Random)
- To cancel RANDOM Play, press this button again..

4. 2 Button (REPEAT)

Repeats the song currently played.

5. 6 Button (MENU)

Moves to the upper category from currently played category of the iPod.

To move to (play) the category (song) displayed, press TUNE knob.

You will be able to search through the lower category of the selected category.

The order of iPod's category is Playlists, Artists, Albums, Genres, Songs, Composers.

VF_GEN_iPod

VF_GEN_USB

6. INFO Button

Displays the information of the file currently played in the order of Title, Artist, Album, Normal Display.

(Displays no information if the file has no song information.)

7. TUNE Knob & ENTER Button

When you rotate the knob clockwise, it will display the songs (category) ahead of the song currently played (category in the same level).

Also, when you rotate the knob counterclockwise, it will display the songs (category) before the song currently played (category in the same level).

To listen to the song displayed in the song category, press the button to skip to and play the selected song.

✻ NOTICE FOR USING THE iPod DEVICE

- **Some iPod models might not support the communication protocol and the files will not be played.**
  Supported iPod models:
  - iPod Mini
  - iPod 4th (Photo) ~ 6th(Classic) generation
  - iPod Nano 1st~4th generation
  - iPod Touch 1st~2nd generation
- **The order of search or playback of songs in the iPod can be different from the order searched in the audio system.**
- **If the iPod disabled due to its own malfunction, reset the iPod. (Reset: Refer to iPod manual)**
- **An iPod may not operate normally on low battery.**
- **Some iPod devices, such as the iPhone, can be connected through the Bluetooth® interface. The device must have audio Bluetooth® capability (such as for stereo headphone Bluetooth®). The device can play, but it will not be controlled by the audio system.**

⚠ CAUTION IN USING THE iPod DEVICE

- ***The HYUNDAI iPod Power Cable is needed in order to operate iPod with the audio buttons on the audio system. The USB cable provided by Apple may cause malfunction and should not be used for HYUNDAI vehicles.***
  ✻ The HYUNDAI iPod Power Cable may be purchased through your HYUNDAI Dealership.
- ***When connecting iPod with the iPod Power Cable, insert the connector to the multimedia socket completely. If not inserted completely, communications between iPod and audio may be interrupted.***
- ***When adjusting the sound effects of the iPod and the audio system, the sound effects of both devices will overlap and might reduce or distort the quality of the sound.***

(Continued)

(Continued)

- ***Deactivate (turn off) the equalizer function of an iPod when adjusting the audio system's volume, and turn off the equalizer of the audio system when using the equalizer of an iPod.***
- ***When the iPod cable is connected, the system can be switched to AUX mode even without iPod device and may cause noise. Disconnect the iPod cable when you are not using the iPod device.***
- ***When not using iPod with car audio, detach the iPod cable from iPod. Otherwise, iPod may remain in accessory mode, and may not work properly.***

(Continued)

(Continued)

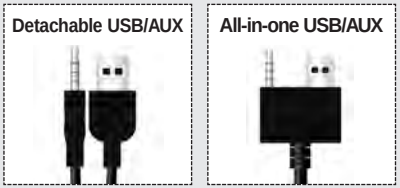

- ***When connecting the iPod, use the USB/AUX terminals.***
- ***When disconnecting the iPod, disconnect both the USB/AUX terminal.***
- ***The iPod exclusive cable must be connected to both the USB/AUX terminals for iPod charging and operations to be supported.***

BLUETOOTH® PHONE OPERATION (if equipped)

1. VOLUME button : Raises or lowers speaker volume.
2. button : Places or transfers a call.
3. button : Rejects or ends a call.

■ What is Bluetooth®?

Bluetooth® is a wireless technology that allows multiple devices to be connected in a short range, low-powered devices like hands-free, stereo headset, wireless remote control, etc. For more information, visit the Bluetooth® website at *www.Bluetooth.com*

■ General Features

- This audio system supports Bluetooth® hands-free and stereo-headset features.
  - HANDS-FREE feature: Making or receiving calls wirelessly.
  - STEREO-HEADSET feature: Playing music from cellular phones (that supports A2DP feature) wirelessly.

✻ NOTICE

- **The phone must be paired to the system before using Bluetooth® features.**
- **Only one selected (connected) cellular phone can be used with the system at a time.**
- **Some phones are not fully compatible with this system.**
- **The Bluetooth® word mark and logos are registered trademarks owned by Bluetooth® SIG, Inc. and any use of such marks by HYUNDAI is under license. A Bluetooth enabled cell phone is required to use Bluetooth® wireless technology.**

■ Phone Setup

All Bluetooth®-related operations can be performed in PHONE menu.

1) Push the SETUP button to enter SETUP mode.
2) Rotate the TUNE knob to move the cursor between items push the ENTER button to select “Phone”.

3) Rotate the TUNE knob to move the cursor between items and push the ENTER button to select a desired item.

• Pairing a phone

Before using Bluetooth® features, the phone must be paired (registered) with the audio system. Up to 5 phones can be paired with the system.

NOTE:

- **The pairing procedure of the phone varies according to each phone model. Before attempting to pair phone, please see your phone’s User’s Guide for instructions.**
- **Once pairing with the phone is completed, there is no need to pair with that phone again unless the phone is deleted manually from the audio system (refer “Deleting a Phone” section) or the vehicle’s information is removed from the phone.**

1. Press SETUP button to enter SETUP mode.
2. Select “PHONE”, then “PAIR” in PHONE menu.
3. The audio displays “searching ---- passkey: 0000”
4. Search the Bluetooth® system on your phone .Your phone should display your [vehicle model name] on the Bluetooth® device list. Then attempt pairing on your phone.

NOTE:

- **If the phone is paired to two or more vehicles of the same model, i.e. both vehicles are HYUNDAI i40, some phones may not handle Bluetooth® devices of that name correctly. In this case, you may need to change the name displayed on your phone from i40 to i401 and i402.**

  Refer to your phone’s User’s Guide, or contact your cellular carrier or phone manufacturer for instructions.
- **Once pairing with the phone is completed, there is no need to pair with that phone again unless the phone is deleted manually from the audio system (refer “Deleting Phone” section) or the vehicle’s information is removed from the phone.**

• Connecting a phone

When the Bluetooth® system is enabled, the phone previously used is automatically selected and re-connected. If you want to select different phone previously paired, the phone can be selected through “Select Phone” menu.

Only a selected phone can be used with the hands-free system at a time.

1. Press SETUP button to enter SETUP mode.
2. Select “PHONE”, then “Select” in PHONE menu.
3. Select desired phone name from the list shown.

• Changing Priority

If several phones are paired with the audio system, the system attempts to connect following order when the Bluetooth® system is enabled:

1) “Priority” checked phone.
2) Previously connected phone
3) Gives up auto connection.

1. Press SETUP button to enter SETUP mode.
2. Select “PHONE”, then “Priority” in PHONE menu.
3. Select desired phone name from the list shown.

• Deleting a Phone

The paired phone can be deleted.

- When the phone is deleted, all the information associated with that phone is also deleted (including phonebook).
- If you want to use the deleted phone with the audio system again, pairing procedure must be completed once more.

1. Press SETUP button to enter SETUP mode.
2. Select “PHONE”, then “Delete” in PHONE menu.
3. Select desired phone name from the list shown.

• Turning Bluetooth® ON/OFF

Bluetooth® system can be enabled (ON) or disabled (OFF) by this menu.

- If Bluetooth® is disabled, all the commands related to Bluetooth® system prompts whether you wish to turn Bluetooth® ON or not.

1. Press SETUP button to enter SETUP mode.
2. Select “PHONE”, then “BT Off” in PHONE menu.

■ Receiving a Phone Call

When receiving a phone call, a ringtone is audible from speakers and the audio system changes into telephone mode.

When receiving a phone call, “Incoming” message and incoming phone number (if available) are displayed on the audio.

• To Answer a Call:

- Press button on the steering wheel.

• To Reject a Call:

- Press button on the steering wheel.

• To Adjust Ring Volume:

- Use VOLUME buttons on the steering wheel.

• To Transfer a Call to the Phone(Private Call):

- Press and hold button on the steering wheel until the audio system transfers a call to the phone.

■ Talking on the Phone

When talking on the phone, “Active Calls” message and the other party’s phone number (if available) are displayed on the audio.

• To Finish a Call

- Press button on the steering wheel.

■ Making a Phone Call

A Call Back can be made by pressing button on the steering wheel.

- This is the same function as using the button solely on the cellular phone.

NOTE:

Some phone models require pressing button twice to make a call.

✻ NOTICE

In the following situations, you or the other party may have difficulty hearing each other:

1. **Speaking at the same time, your voice may not reach each other parties. (This is not a malfunction.) Speak alternately with the other party on the phone.**
2. **Keep the Bluetooth® volume to a low level. High-level volume may result in distortion and echo.**
3. **When driving on a rough road.**
4. **When driving at high speeds.**
5. **When the window is open.**
6. **When the air conditioning vents are facing the microphone.**
7. **When the sound of the air conditioning fan is loud.**

■ Bluetooth® Audio Music Streaming

This audio system supports A2DP (Audio Advanced Distribution Profile) and AVRCP(Audio Video Remote Control Profile).

Both profiles are available for listening to the MP3 music via Bluetooth cellular phone supporting above Bluetooth profiles.

To play MP3 music from the Bluetooth cellular phone, press the AUX button until “MP3 Play” is displayed on the LCD.

Then try playing music by phone.

When playing music from the Bluetooth cellular phone, the head unit displays MP3 MODE.

NOTE:

- **Not only MP3 files, all the sounds that the phone supports can be heard by the audio system.**
- **The Bluetooth cellular phones shall feature A2DP and AVRCP functions.**
- **Some A2DP and AVRCP Bluetooth cellular phones may not play music through the head unit on first try. Please try the below;**
  i.e : Menu ➡ Filemanager ➡ Music ➡ Option ➡ Play via Bluetooth
- **Please refer to User's Guide of your phone for more.**
  To stop music, try stop playing music from the phone then change the audio mode to other than “MP3 Play” mode (e.g. FM, AM, CD, etc.)

⚠ CAUTION IN USING BLUETOOTH® CELLULAR PHONE

- *Do not use a cellular phone or perform Bluetooth® settings (e.g. pairing a phone) while driving.*
- *Some Bluetooth®-enabled phones may not be recognized by the system or fully compatible with the system.*
- *Before using Bluetooth® related features of the audio system, refer your phone's User's Manual for phone-side Bluetooth® operations.*
- *The phone must be paired to the audio system to use Bluetooth® related features.*
- *You will not be able to use the hands-free feature when your phone (in the car) is outside of the cellular service area (e.g. in a tunnel, in a underground, in a mountainous area, etc.).*
- *If the cellular phone signal is poor or the vehicles interior noise is too loud, it may be difficult to hear the other person's voice during a call.*

(Continued)

(continued)

- *Do not place the phone near or inside metallic objects, otherwise communications with Bluetooth® system or cellular service stations can be disturbed.*
- *While a phone is connected through Bluetooth® your phone may discharge quicker than usual for additional Bluetooth®-related operations.*
- *Some cellular phones or other devices may cause interference noise or malfunction to audio system. In this case, store the device in a different location may resolve the situation.*
- *Please save your phone name in English, or your phone name may not be displayed correctly.*
- *If Priority is set upon vehicle ignition (IGN/ACC ON), the Bluetooth phone will be automatically connected. Even if you are outside, the Bluetooth phone will be automatically connected once you are in the vicinity of the vehicle.*

  If you do not want automatic Bluetooth power off.

(Continued)

(continued)

- *Bluetooth connection may become intermittently disconnected in some mobile phones. Follow the following steps to try again.*
  1) *Turn the Bluetooth Function within the mobile phone ON/OFF and try to connect again.*
  2) *Turn the mobile phone power ON/OFF and try to connect again.*
  3) *Completely remove the mobile phone battery, reboot, and then try to connect again.*
  4) *Reboot the Audio and try to connect again.*
  5) *Delete all paired devices from the mobile phone and Audio and re-pair for use.*
- *The hands-free call volume and quality may differ depending on the mobile phone.*

■ **CD Player : AC100DFE/AC110DFE**

■ **CD Changer : AC600DFE/AC610DFE**

✻There will be no Bluetooth logo if the Bluetooth® feature is not supported.

VF_AC100DFE_EU / VF_AC600DFE_EU

VF_EU_RADIO

Using RADIO, SETUP, VOLUME and AUDIO CONTROL

1. FM Button

Turns to FM mode and toggles FM1 and FM2 when the button is pressed each time. FM1 ➡ FM1 ➡ FMA

2. AM Button

Pressing the AM button selects the AM band. AM Mode is displayed on the LCD. AM➡AMA

3. TA Button

TA(Traffic announcement) Channels in FM, CD, AUX mode, turns on/off the reception of TA channels of RDS.

4. SEEK Button

- When the SEEK TRACK ∨ is pressed, it will automatically tune to the next lower station.
- When the SEEK TRACK ∧ is pressed, it will automatically tune to the next higher station.

5. ⏻ Button & ◢ Knob

- Turns the audio system on/off when the ignition switch is on ACC or ON.
- If the knob is turned clockwise/counter-clockwise, the volume will increase /decrease.
- Depending on the model if the ignition switch is not on ACC or ON position. the “Battery Discharge” warning appears on LCD after 10 seconds of power-up, and automatically turns off after 1 hours of operation.

VF_EU_RADIO

6. PRESET Buttons

- Press 1 ~ 6 buttons less than 0.8 seconds to play the station saved in each button.
- Press 1 ~ 6 buttons more than 0.8 seconds or longer to save the current station to the respective button with a beep.

VF_EU_RADIO

7. AST Button (AUTO STORE)

When the button is pressed, it automatically selects and saves channels with high reception rate to PRESET buttons 1 ~ 6 and plays the channel saved in PRESET1. If no channel is saved after AST, it will play the previous channel.

- Saves only the Preset memory (1)~(6) of FMA or AMA mode in some models.

8. DARK Button

Turn the LCD Display & Backlight ON/OFF when DARK button press.

9. PTY Button

- Moves PTY FOLDER button when searching PTY in RDS Broadcasting Program Type selection.
- Moves PTY FOLDER button when searching PTY in RDS Broadcasting Program Type selection.

10. SETUP Button

Press the SETUP button to convert to Setup Mode. In the Setup Mode screen, select the mode you want to set by pressing the knob. Press knob to enter detailed setup mode. The Setup Mode screens are each different according to the Bluetooth, External Amp option selections.

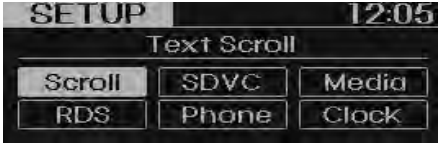

• SCROLL

Select whether long file names are scrolled continuously (On) or just once (Off).

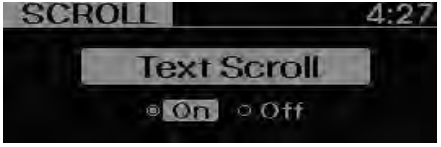

• SDVC (Speed Dependent Volume Control)

Select this item to turn the SDVC feature On or Off. If it is turned ON, volume level is adjusted automatically according to the vehicle speed.

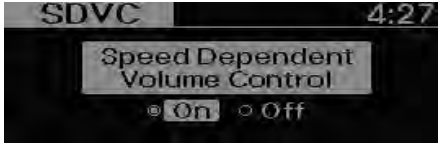

• MEDIA

Select default display of MP3 play information. “Folder/File” or “Artist/Title” can be selected.

• RDS(if available)

RDS menu includes News/AF/Region/TA Vol. menu sequentially.

• NEWS(NEWS MENU indication is pos sible with RDS MENU)

Turns the automatic NEWS reception feature ON or OFF.

• AF(AF MENU indication is possible with RDS MENU)

Select this item to turn the AF(Alternate Frequency) feature ON or OFF.

• TA VOL.(TA VOL. MENU indication is possible with RDS MENU)

Adjusts the TA (Traffic Announcement) volume level according to normal audio volume level.

• REGION(REGION MENU indication is possible with RDS MENU)

Selects whether REGION code is used (ON) or not (OFF) once the radio determines the AF jump condition. If AUTO is selected, AF jump condition is determined automatically via PI reception status.

• CLOCK

Select this item to enter Clock setup mode.(12/24Hr., Auto, Time)

• 12/24 Hr.

Select “12/24 Hr.” button to enter Time Format menu.

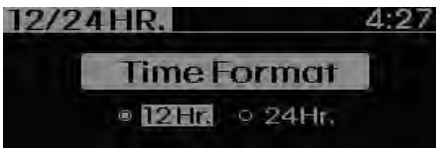

• Auto

Select “Auto” button to enter Automatic RDS Time menu.

• Time

Select “Time” button to enter Time setting. Adjust the hour and press the knob to set. Adjust the minute and press the knob to complete and exit from clock adjustment mode. Pressing the SETUP button more than 0.8 seconds while in power off, screen will allow the user to make immediately adjustments to the clock.

• PHONE (if equipped)

Select this item to enter PHONE setup mode. Refer to “BLUETOOTH PHONE OPERATION” section for detailed information.

❊ “PHONE” menu is not available if the audio does not support Bluetooth features.

VF_EU_RADIO

11. & Knob

Within the screen displayed after first pressing the knob, turn the knob to select the mode. The modes will change in order of BASS . MIDDLE ↔ TREBLE ↔ FADER ↔ BALANCE.

• BASS Control

Press BASS and turn the knob to adjust the bass setting. In this state, turn the knob clockwise to increase the bass and counter-clockwise to decrease the bass. (Based on bass frequency band, the range of adjustment is max +10/min-10.)

BASS -1 ← BASS 0 → BASS +1

• MIDDLE Control

Press MIDDLE and turn the knob to adjust the middle setting. In this state, turn the knob clockwise to increase the middle and counter-clockwise to decrease the middle. (Based on middle frequency band, the range of adjustment is max +10/min-10.)

MIDDLE -1 ← MIDDLE 0 → MIDDLE +1

• TREBLE Control

Press TRBLE and turn the knob to adjust the treble setting. In this state, turn the knob clockwise to increase the treble and counter-clockwise to decrease the treble. (Based on treble frequency band, the range of adjustment is max +10/min-10.)

TREBLE -1 ← TREBLE → TREBLE

• FADER Control

Press FADER and turn the knob clockwise and counter-clockwise to adjust the front/rear volume levels. In this state, turn the knob clockwise to increase the front speaker volume and counter-clockwise to increase the rear speaker volume. (The front/rear can each be adjusted to F=10/R=10.)

FADER F=1 ← FADER F=R → FADER R=1

• BALANCE Control

Press BALANCE and turn the knob to adjust the left/right volume setting. In this state, turn the knob clockwise to decrease the left speaker volume and counter-clockwise to decrease the right speaker volume.

(The left/right can each be adjusted to L=10/R=10.)

VF_EU_CD

Using CD Player

1. CD/AUX Button (CD)

If the CD is loaded, turns to CD mode. If no CD, it displays “No Media” for 3 seconds and returns to the previous mode.

2. TRACK Button

- Press SEEK TRACK button for less than 0.8 seconds to play from the beginning of current song.
- Press SEEK TRACK button for less than 0.8 seconds and press again within 1 second to play the previous song.
- Press SEEK TRACK button for 0.8 seconds or longer to initiate reverse direction high speed sound search of current song.
- Press SEEK TRACK button for less than 0.8 seconds to play the next song.
- Press SEEK TRACK button for 0.8 seconds or longer to initiate forward direction high speed sound search of current song

3. 1 Button (RANDOM)

Press this button for less than 0.8 seconds to activate ‘RDM’ mode and more than 0.8 seconds to activate ‘ALL RDM’ mode.

- RDM : Only files/tracks in a folder/disc are played back in random sequence.
- ALL RDM (MP3/WMA Only) : All files in a disc are played back in random sequence.

4. 2 Button (REPEAT)

Press this button for less than 0.8 seconds to activate ‘RPT’ mode and more than 0.8 seconds to activate ‘FLD.RPT’ mode.

- RPT : Only a track (file) is repeatedly played back.
- FLD.RPT (MP3/WMA Only) : Only files in a folder are repeatedly played back.

5. 5 Button (SCAN)

Play each song in the CD for 10 seconds. To cancel SCAN Play, press this button again.

6. DISC Button (CD changer : AC600DFE/AC610DFE)

- Preset 3 button changes disc to the previous disc.
- Preset 4 button changes disc to the next disc.

VF_EU_CD

7. INFO Button

Displays the information of the current song.

- Audio CD : Disc Title/Artist, Track Title /Artist, Total Track.
- MP3 CD : File Name, Title, Artist, Album, Folder, Total Files (Not displayed if the information is unavailable on the CD or file.)

8. FOLDER Button

- Press PTY FOLDER button to move to child folder of the current folder and display the first song in the folder. Press knob to move to the folder displayed. It will play the first song in the folder.
- Press PTY FOLDER button to move to parent folder of the current folder and display the first song in the folder.

Press knob to move to the folder displayed.

9. & Knob

- Turn this knob clockwise to browse songs after current song, or counter-clockwise to browse songs before current song. To play the displayed song, press the knob.
- Pressing this knob without turning enters to AUDIO CONTROL mode.

VF_AC100DFE_CDP

VF_AC600DFE_CDC

10. CD Eject Button

Push button for less than 0.8 seconds to eject the CD during CD playback. This button is enabled when ignition switch is off.

- ALL EJECT (CD Changer : AC600DFE/ AC610DFE)

Press this button for more than 0.8 seconds to eject all discs inside the deck in respective order.

11. CD Slot

Insert a CD with the label side up and gently push in while ignition switch is on ACC or ON. The audio automatically switches to CD mode and begins to play the CD.

If the audio was turned off, audio power will automatically turn on as the CD is inserted.

- This audio only recognizes 12cm-size, CD-DA (Audio CD) or ISO data-CD (MP3 CD).
- If UDF data-CD or non-CD (e.g. DVD) is inserted, "Reading Error" message will be displayed and the disc will be ejected.

12. CD Indicator (CD Player : AC100 DFE /AC110DFE)

When car ignition switch is in ACC or ON and if the CD is loaded, this indicator is lighted. If the CD is ejected the light is turned off.

⚠ CAUTION

Do not insert a CD if CD indicator is lit.

13. LOAD Button (CD Changer : AC600DFE/AC610DFC))

Push LOAD button to load CDs to available CDC deck (from 1~6). Push LOAD button for more than 2 seconds to load into all available decks. The last CD will play. 10 seconds idle status will disable loading process.

NOTE:

Order of playing files (folders) :

1. Song playing order : ① to ⑭ sequentially.

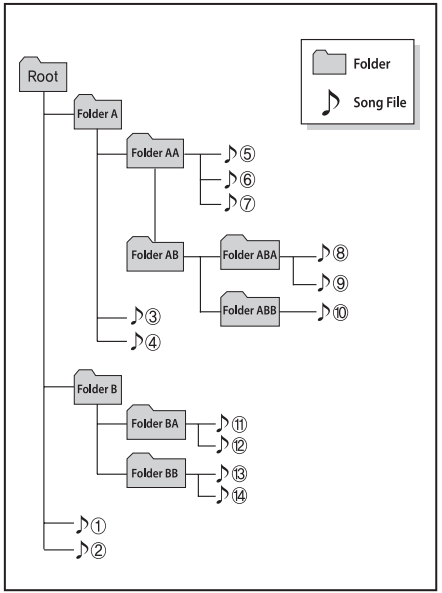

2. Folder playing order :

✻ If no song file is contained in the folder, that folder is not displayed.

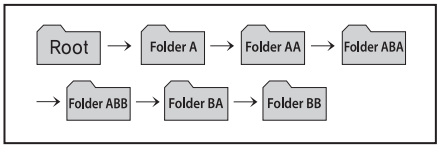

VF_EU_USB

Using USB device

1. CD/AUX Button (USB or AUX)

If the auxiliary device is connected, it switches to USB or AUX mode to play the sound from the auxiliary player.

If there is no auxiliary device, then the message “No Media” will become displayed on the LCD for 3 seconds and returns to previous mode.

2. TRACK Button

- Press the SEEK TRACK button for less than 0.8 seconds to play from the beginning of the current song.
- Press the SEEK TRACK button for less than 0.8 seconds and press it again within 1 second to move to and play the previous song.
- Press the SEEK TRACK button for 0.8 seconds or longer to play the song in reverse direction in fast speed.
- Press the SEEK TRACK button for less than 0.8 seconds to move to the next song. Press the SEEK TRACK button for 0.8 seconds or longer to play the song in forward direction in fast speed.

VF_EU_USB

3. 1 Button (RANDOM)

- Press this button for less than 0.8 seconds to play songs randomly in current folder.
- Press this button for 0.8 seconds or longer to play songs randomly in entire USB device.
- To cancel RANDOM play, press this button again.

4. 2 Button (REPEAT)

- Press this button for less than 0.8 seconds to repeat current song.
- Press this button for 0.8 seconds or longer to repeat all songs in current folder.
- To cancel REPEAT, press this button again.

5. 5 Button (SCAN)

Plays each song in the USB device for 10 seconds. To cancel SCAN play, press this button again.

VF_EU_USB

6. INFO Button

Displays the information of the file currently played in the order of File Name, Title, Artist, Album, Folder, Total File. (Displays no information if the file has no song information.)

VF_EU_USB

7. FOLDER Button

- Press PTY FOLDER button to move to child folder of the current folder and display the first song in the folder.

  Press knob to move to the folder displayed. It will play the first song in the folder.
- Press PTY FOLDER button to move to parent folder display the first song in the folder. Press knob to move to the folder displayed.

8. & Knob

- Turn this knob clockwise to browse songs after current song, or counter clockwise to browse songs before current song. To play the displayed song, press the knob.
- Pressing this knob without turning enters to AUDIO CONTROL mode.

⚠ CAUTION IN USING USB DEVICE

- *To use an external USB device, make sure the device is not connected when starting up the vehicle. Connect the device after starting up.*
- *If you start the engine when the USB device is connected, it may damage the USB device. (USB flashdrives are very sensitive to electric shock.)*
- *If the engine is started up or turned off while the external USB device is connected, the external USB device may not work.*
- *It may not play inauthentic MP3 or WMA files.*
  1) *It can only play MP3 files with the compression rate between 8Kbps~320Kbps.*
  2) *It can only play WMA music files with the compression rate between 8Kbps~320Kbps.*
- *Take precautions for static electricity when connecting or disconnecting the external USB device.*

(Continued)

(Continued)

- *An encrypted MP3 PLAYER is not recognizable.*
- *Depending on the condition of the external USB device, the connected external USB device can be unrecognizable.*
- *When the formatted byte/sector setting of External USB device is not either 512BYTE or 2048BYTE, then the device will not be recognized.*
- *Use only a USB device formatted to FAT 12/16/32.*
- *USB devices without USB I/F authentication may not be recognizable.*
- *Make sure the USB connection terminal does not come in contact with the human body or other objects.*
- *If you repeatedly connect or disconnect the USB device in a short period of time, it may break the device.*
- *You may hear a strange noise when connecting or disconnecting a USB device.*

(Continued)

(Continued)

- *If you disconnect the external USB device during playback in USB mode, the external USB device can be damaged or may malfunction. Therefore, disconnect the external USB device when the audio is turned off or in another mode. (e.g, Radio or CD)*
- *Depending on the type and capacity of the external USB device or the type of the files stored in the device, there is a difference in the time taken for recognition of the device.*
- *Do not use the USB device for purposes other than playing music files.*
- *Playing videos through the USB is not supported.*
- *Use of USB accessories such as rechargers or heaters using USB I/F may lower performance or cause trouble.*
- *If you use devices such as a USB hub purchased separately, the vehicle's audio system may not recognize the USB device. In that case, connect the USB device directly to the multimedia terminal of the vehicle.*

(Continued)

(Continued)

- *If the USB device is divided by logical drives, only the music files on the highest-priority drive are recognized by car audio.*
- *Devices such as MP3 Player/ Cellular phone/Digital camera can be unrecognizable by standard USB I/F can be unrecognizable.*
- *Charging through the USB may not be supported in some mobile devices.*

  ✻ *A car exclusive cable (provided or sold separately) is required to use the iPod.*
- *Some non-standard USB devices (METAL COVER TYPE USB) can be unrecognizable.*
- *Some USB flash memory readers (such as CF, SD, microSD, etc.) or external-HDD type devices can be unrecognizable.*
- *Music files protected by DRM (DIGITAL RIGHTS MANAGEMENT) are not recognizable.*
- *The data in the USB memory may be lost while using this audio. Always back up important data on a personal storage device.*

(Continued)

(Continued)

- *Please avoid using USB memory products which can be used as key chains or cellular phone accessories as they could cause damage to the USB jack. Please make certain only to use plug type connector products as shown below.*

VF_EU_iPod

Using iPod

✻ iPod is a trademark of Apple Inc.

1. CD/AUX Button (iPod)

If iPod is connected, it switches to the iPod mode from the previous mode to play the song files stored in the iPod.

If there is no iPod connected, then it displays the message "No Media" for 3 seconds and returns to the previous mode.

2. TRACK Button

- Press SEEK TRACK button for less than 0.8 seconds to play from the beginning of current song.
- Press SEEK TRACK button for less than 0.8 seconds and press again within 1 second to play the previous song.
- Press SEEK TRACK button for 0.8 seconds or longer to initiate reverse direction high speed sound search of current song.
- Press SEEK TRACK button for less than 0.8 seconds to play the next song.
- Press SEEK TRACK button for 0.8 seconds or longer to initiate forward direction high speed sound search of current song.

VF_EU_iPod

3. 1 Button (RANDOM)

- Press this button for less than 0.8 seconds to shuffle order of all songs in current category. (Song Random)
- Press this button for 0.8 seconds or longer to shuffle order of albums in current category. (Album Random)
- To cancel RANDOM Play, press this button again.

4. 2 Button (REPEAT)

Repeats the song currently played.

5. 6 Button (MENU)

Moves to the upper category from currently played category of the iPod.

To move to (play) the category (song) displayed, press knob.

You will be able to search through the lower category of the selected category.

The standard order of iPod's category is Playlists, Artists, Albums, Genres, Songs, Composers.

VF_EU_iPod

6. INFO Button

Displays the information of the file currently played in the order of Title, Artist, Album, Normal Display. (Displays no information if the file has no song information.)

VF_VFE_USB

7. & Knob

When you rotate the knob clockwise, it will display the songs (category) ahead of the song currently played (category in the same level).

Also, when you rotate the knob counterclockwise, it will display the songs (category) before the song currently played (category in the same level).

To listen to the song displayed in the song category, press the button to skip to and play the selected song.

Pressing the button changes the BASS, MIDDLE, TREBLE, FADER and BALANCE TUNE mode. The mode selected is shown on the display. After selecting each mode, rotate the Audio control knob clockwise or counterclockwise.

✻ NOTICE FOR USING THE iPod DEVICE

- Some iPod models might not support the communication protocol and the files will not be played.
  Supported iPod models:
  - iPod Mini
  - iPod 4th(Photo) ~ 6th(Classic) generation
  - iPod Nano 1st~4th generation
  - iPod Touch 1st~2nd generation
- The order of search or playback of songs in the iPod can be different from the order searched in the audio system.
- If the iPod disabled due to its own malfunction, reset the iPod. (Reset: Refer to iPod manual)
- An iPod may not operate normally on low battery.
- Some iPod devices, such as the iPhone, can be connected through the Bluetooth® interface. The device must have audio Bluetooth® capability (such as for stereo headphone Bluetooth®). The device can play, but it will not be controlled by the audio system.

⚠ CAUTION IN USING THE iPod DEVICE

- *The Hyundai iPod Power Cable is needed in order to operate iPod with the audio buttons on the audio system. The USB cable provided by Apple may cause malfunction and should not be used for Hyundai vehicles.*

  ✻ *The Hyundai iPod Power Cable may be purchased through your Hyundai Dealership.*
- *When connecting iPod with the iPod Power Cable, insert the connector to the multimedia socket completely. If not inserted completely, communications between iPod and audio may be interrupted.*
- *When adjusting the sound effects of the iPod and the audio system, the sound effects of both devices will overlap and might reduce or distort the quality of the sound.*
- *Deactivate (turn off) the equalizer function of an iPod when adjusting the audio system's volume, and turn off the equalizer of the audio system when using the equalizer of an iPod.*

(Continued)

(Continued)

- *When the iPod cable is connected, the system can be switched to AUX mode even without iPod device and may cause noise. Disconnect the iPod cable when you are not using the iPod device.*
- *When not using iPod with car audio, detach the iPod cable from iPod. Otherwise, iPod may remain in accessory mode, and may not work properly.*

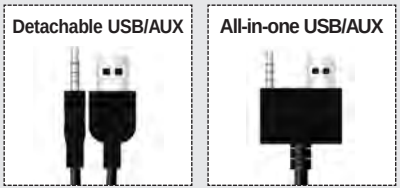

- *When connecting the iPod, use the USB/AUX terminals.*
- *When disconnecting the iPod, disconnect both the USB/AUX terminal.*
- *The iPod exclusive cable must be connected to both the USB/AUX terminals for iPod charging and operations to be supported.*

BLUETOOTH® PHONE OPERATION (if equipped)

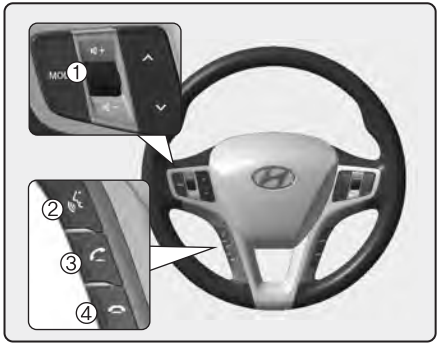

1. VOLUME button : Raises or lowers speaker volume.
2. button : Activates voice recognition.
3. button : Places or transfers a call.
4. button : Rejects or ends a call.

■ What is Bluetooth®?

Bluetooth® is a wireless technology that allows multiple devices to be connected in a short range, low-powered devices like hands-free, stereo headset, steering remote control, etc. For more information, visit the Bluetooth® website at *www.Bluetooth.com*

■ General Features

- This audio system supports Bluetooth® hands-free and stereo-headset features.
  - HANDS-FREE feature: Making or receiving calls wirelessly through voice recognition.
  - STEREO-HEADSET feature: Playing music from cellular phones (that supports A2DP feature) wirelessly.
- Voice recognition engine of the Bluetooth® system supports 10 types of languages:
  - FRENCH
  - GERMAN
  - UK ENGLISH
  - SPANISH
  - DUTCH
  - ITALIAN
  - DANISH
  - RUSSIAN
  - POLISH
  - SWEDISH

✻ NOTICE

- **The phone must be paired to the system before using Bluetooth® features.**
- **Only one selected (linked) cellular phone can be used with the system at a time.**
- **Some phones are not fully compatible with this system.**
- **The Bluetooth® word mark and logos are registered trademarks owned by Bluetooth® SIG, Inc. and any use of such marks by Hyundai is under license. A Bluetooth enabled cell phone is required to use Bluetooth® wireless technology.**

■ Bluetooth® Language Setting

The system language can be changed by the following steps:

1. Power on the audio system with the volume set to an audible level.
2. Press and hold button on the steering wheel until the audio displays “Please Wait”.
   - The Bluetooth® system will reply in currently selected language that it is changing to the next language.
   - System language cycles between FRENCH/GERMAN/UK ENGLISH SPANISH/DUTCH/ITALIAN/DANISH/ RUSSIAN/POLISH/SWEDISH.
3. When completed, the audio display returns to normal.
4. Repeat steps 2 and 3 for the next language selection.

NOTE:

The phone needs to be paired again after changing system language.

- Avoid resting your thumb or finger on the button as the language could unintentionally change.

■ Voice Recognition Activation

- The voice recognition engine contained in the Bluetooth® System can be activated in the following conditions:
  - Button Activation
    The voice recognition system will be active when the button is pressed and after the sound of a Beep.
  - Active Listening
    The voice recognition system will be active for a period of time when the Voice Recognition system has asked for a customer response.

- The system can recognize single digits from zero to nine while number greater than ten will not be recognized.

- If the command is not recognized, the system will announce "Pardon" or No input voice signal from microphone. (No response)

- The system shall cancel voice recognition mode in following cases : When pressing the button and saying cancel following the beep. When not making a call and pressing the button. When voice recognition has failed 3 consecutive times.

- At any time if you say “help”, the system will announce what commands are available.

■ Menu tree

The menu tree identifies available voice recognition Bluetooth® functions.

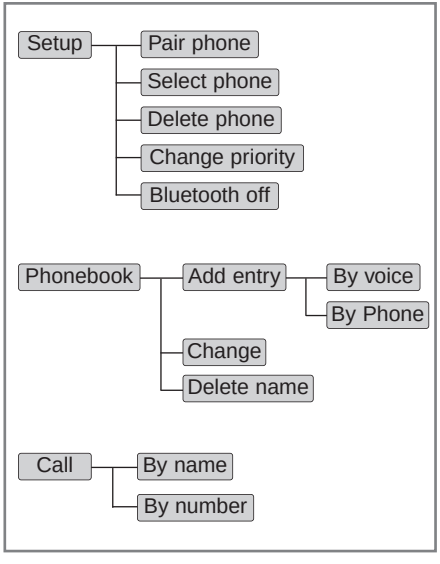

■ Voice Operation Tip

To get the best performance out of the Voice Recognition System, observe the followings:

- Keep the interior of the vehicle as quiet as possible. Close the window to eliminate surrounding noise (traffic noise, vibration sounds, etc), which may disturb recognizing the voice command correctly.
- Speak a command after a beep sound within 5 seconds. Otherwise the command will not be received properly.
- Speak in a natural voice without pausing between words.

■ Phone Setup

All Bluetooth®-related operations can be performed by voice command or by manual operation.

- By Voice Command:

1. Press button.
2. Say “Set up”.
   - The system replies with available commands.
     1) Pair phone
     2) Select phone
     3) Delete phone
     4) Change priority
     5) Bluetooth off
   - To skip the information message, Press again and then a beep is heard.

- By Manual Operation:

1. Push the SETUP button to enter SETUP mode.
2. Rotate the knob to move the cursor between items push the knob to select “Phone”.

3. Rotate the knob to move the cursor between items and push the knob to select a desired item.

• Pairing phone

Before using Bluetooth® features, the phone must be paired (registered) to the audio system. Up to 5 phones can be paired with the system.

NOTE:

The pairing procedure of the phone varies according to each phone model. Before attempting to pair phone, please see your phone’s User’s Guide for instructions.

NOTE:

Once pairing with the phone is completed, there is no need to pair with that phone again unless the phone is deleted manually from the audio system (refer “Deleting Phone” section) or the vehicle’s information is removed from the phone.

- By Voice Command:

1. Press button.
2. Say “Set Up”.
   - The system replies with available commands.
   - To skip the information message, press again and then a beep is heard.

3. Say “Pair Phone”
4. Proceed at next step.
5. Say the name of your phone when prompted.
   - Use any name to uniquely describe your phone.
   - Use Full name to voice tag.
   - Not use to short name or similar to voice command.
6. Bluetooth® system will repeat the name you stated.
7. Say “Yes” to confirm.
8. The audio displays “searching ---- passkey: 0000” and asks you to initiate pairing procedure from the phone.
9. Search the Bluetooth® system on your phone .Your phone should display your [vehicle model name] on the Bluetooth® device list. Then attempt pairing on your phone
10. After Pairing is completed, your phone will start to transfer phone/contact list to the audio system.
    - This process may take from a few minutes to over 10 minutes depending on the phone model and number of entries in the phone/contact list.

- By Manual Operation:
1. Select “Pair” in PHONE menu, then proceed from step5.

NOTE:

- **Until the audio displays “Transfer Complete”, Bluetooth® hands-free feature may not be fully operational.**
- **Depending on the phone make and model, the phone book contact list mat not transfer to the audio system.**

NOTE:

If the phone is paired to two or more vehicles of the same model, i.e. both vehicles are HYUNDAI i40, some phones may not handle Bluetooth® devices of that name correctly. In this case, you may need to change the name displayed on your phone from i40 to i401 and i402.

Refer to your phone’s User’s Guide, or contact your cellular carrier or phone manufacturer for instructions.

• Connecting phone

When the Bluetooth® system is enabled, the phone previously used is automatically selected and re-connected. If you want to select different phone previously paired, the phone can be selected through “Select Phone” menu.

Only a selected phone can be used with the hands-free system at a time.

- By Voice Command:
1. Press button.
2. Say “Set Up”.
3. Say “Select Phone” after prompt
   - The system lists all the registered phone names.
4. Say the name or number of desired phone from the list.
5. Say “Yes” to confirm.

- By Manual Operation:

1. Select “Select” in PHONE menu, then select desired phone from the list.

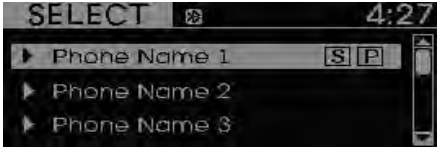

• Changing Priority

When several phones are paired to the audio system, the system attempts to connect following order when the Bluetooth® is enabled:

1. “Priority” checked phone.
2. Previously connected phone
3. Gives up auto connection.

- By Voice Command:

1. Press button.
2. Say “Set Up”.
3. Say “Change Priority” after prompt.
   - The system lists all the registered phone names.
4. Say the name or number of desired phone from the list.
5. Say “Yes” to confirm.

- By Manual Operation:

1. Select “Priority” in PHONE menu, then select desired phone from the list.

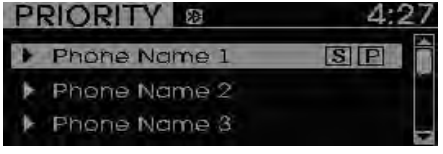

• Deleting Phone

The paired phone can be deleted.

- When the phone is deleted, all the information associated with that phone is also deleted (including phonebook).
- If you want to use the deleted phone with the audio system again, pairing procedure must be completed once more.

- By Voice Command:

1. Press button.
2. Say “Set Up”.
3. Say “Delete Phone” after prompt.
   - The system lists all the registered phone names.
4. Say the name or number of desired phone from the list.
5. Say “Yes” to confirm.

- By Manual Operation:

1. Select “Delete” in PHONE menu, then select desired phone from the list.

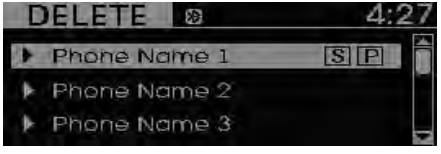

• Changing Language

- By Voice Command:

1. Select “Language” in PHONE menu, adjust language to desired language by turning knob, then press the knob to cinfirm.

- Supported Languages:
  FRENCH/GERMAN/UK ENGLISH SPANISH/DUTCH/ITALIAN/DANISH/RUSSIAN/POLISH/SWEDISH.

NOTE:

The Phone need to be paired again after changing system language.

- **Avoid resting your thumb or finger on the talk button as the language could unintentionally change.**

• Turning Bluetooth® ON/OFF

Bluetooth® system can be enabled (ON) or disabled (OFF) by this menu.

- If Bluetooth® is disabled, all the commands related to Bluetooth® system prompts whether you wish to turn Bluetooth® ON or not.

- By Voice Command:

1. Press button.
2. Say “Set Up”
3. Say “Bluetooth Off” after prompt.
4. Say “Yes” to confirm.

- By Manual Operation:

1. Select “BT Off” in PHONE menu, then after announcement, say “YES” to confirm.

■ Phone Book (In-Vehicle)

• Adding Entry

Phone numbers and voice tags can be registered. Entries registered in the phone can also be transferred.

• Adding Entry by Voice

1. Press button.
2. Say "Phonebook".
   - The system replies with all available commands.
   - To skip the information message, press again and then a beep is heard.
3. Say “Add Entry”.
4. Say “By Voice” to proceed.
5. Say the name of the entry when prompted.
6. Say “Yes” to confirm.
7. Say the phone number of that entry when prompted.
8. Say “Store” if phone number input is finished.
9. Say a phone number type. “Home”, “Work”, “Mobile”, “Other” or “Default” is available.
10. Say “Yes” to complete adding entry.
11. Say “Yes” to store additional location for this contact, or say “Cancel” to finish the process.

✻ NOTICE

- **The system can recognize single digits from zero to nine. Numbers that are ten or greater cannot be recognized.**
- **You can enter each digit individually or group digits together in preferred string lengths.**
- **To speed up input, it is a good idea to group all digits into a continuous string.**
- **Recommend to enter the numbers constituted an grouping within all digit numbers to dial 995 / 734 / 0000.**
- **The display corresponding to each operation appears on the screen as follows:**
  Input operation example:
  1. Say: "Nine, nine, five"
  ➞ Display: "995"
  2. And say: "Seven, three, four"
  ➞ Display: "995734"

• Adding Entry by Phone

1. Press button.
2. Say "Phonebook".
3. Say "Add Entry" after prompt.
4. Say "By Phone" to proceed.
5. Say "Yes" to confirm.
6. Your phone will start to transfer phone/contact list to the audio system.
   This process may take over 10 minutes depending on the phone model and number of entries
7. Wait till the audio displays "Transfer Complete" message.

• Changing Name

The registered names can be modified.

1. Press button.
2. Say "Phonebook".
3. Say "Change Name" after prompt.
4. Say the name of the entry (voice tag).
5. Say "Yes" to confirm.
6. Say new desired name.

• Deleting Name

The registered names can be deleted.

1. Press button.
2. Say "Phonebook".
3. Say "Delete Name" after prompt.
4. Say the name of the entry (voice tag).
5. Say "Yes" to confirm.

■ Making a Phone Call

• Calling by Name

A phone call can be made by speaking names registered in the audio system.

1. Press button.
2. Say "Call".
3. Say "Name" when prompted.
4. Say desired name (voice tag).
5. Say desired location (phone number type). Only stored locations can be selected.
6. Say "Yes" to confirm and make a call.

✻ Tip

A shortcut to each of the following functions is available:
1. Say "Call Name"
2. Say "Call <john>"
3. Say "Call <john> at <home>"

• Dialing by Number

A phone call can be made by dialing the spoken numbers. The system can recognize single digits from zero to nine.

1. Press button.
2. Say “Call”.
3. Say “Number” when prompted.
4. Say desired phone numbers.
5. Say “Dial” to complete the number and make a call.

✻ Tip

A shortcut to each of the following functions is available:
1. Say “Dial Number”
2. Say “Dial <digit>”

■ Receiving a Phone Call

When receiving a phone call, a ringtone is audible from speakers and the audio system changes into telephone mode.

When receiving a phone call, “Incoming call” message and incoming phone number (if available) are displayed on the audio.

• To Answer a Call:
- Press button on the steering wheel.
• To Reject a Call:
- Press button on the steering wheel.
• To Adjust Ring Volume:
- Use VOLUME buttons on the steering wheel.
• To Transfer a Call to the Phone (Secret Call):
- Press button on the steering wheel until the audio system transfers a call to the phone.

■ Talking on the Phone

When talking on the phone, “Active Call” message and the other party’s phone number (if available) are displayed on the audio.

• To Finish a Call
- Press button on the steering wheel.

✻ NOTICE

In the following situations, you or the other party may have difficulty hearing each other:
1. Speaking at the same time, your voice may not reach each other parties. (This is not a malfunction.) Speak alternately with the other party on the phone.
2. Keep the Bluetooth® volume to a low level. High-level volume may result in distortion and echo.
3. When driving on a rough road.
4. When driving at high speeds.
5. When the window is open.
6. When the air conditioning vents are facing the microphone.
7. When the sound of the air conditioning fan is loud.

■ Bluetooth® Audio Music Streaming

The audio system supports Bluetooth® A2DP (Audio Advanced Distribution Profile) and AVRCP (Audio Video Remote Control Profile) technologies.

Both profiles provide steaming of music via compatible “PAIRED” Bluetooth® Cellular phone.

To stream music from the Bluetooth® cellular phone, play your music files on your cellular phone according to your cellular phone user’s manual and press the CD/AUX button on the audio system until “MP3 play” is displayed on the LCD.

The audio system head unit displays ‘MP3 MODE’.

NOTE:

- **In addition to streaming MP3 files, all music and sound files your cellular phone supports can be played by the audio system.**
- **Bluetooth® compatible cellular phones must include A2DP and AVRCP capabilities.**
- **Some A2DP and AVRCP compatible Bluetooth® cellular phones may not play music through the audio system initially. These cellular phones may need to have the Bluetooth® streaming enabled, for example;**

  i.e : Menu➞Filemanager➞Music➞ Option➞Play via Bluetooth
- **Please refer to User’s Guide for your cellular phone for more information. To cancel Bluetooth® cellular phone music streaming, stop music playback on the cellular phone or change the audio mode to AM/FM, CD, iPod, ect.**

■ Key matrix

No.	KEY		Class							
			Paired H/P Empty	Disconnected	Connected		Incoming Call	Outgoing Call	Active Call	2nd Call
					Normal mode	BT SETUP menu				
1		SHORT	Not Paired	Not Connecting	-	-	Accept Call	-	2nd call 1st Call:waiting 2nd Call:active	2nd Call 2nd Call:waiting 1st Call:active
		LONG	-	-	-	-	-	-	Transfer call:secret call	
2		SHORT	VR MODE Cancel	VR MODE Cancel	VR MODE Cancel	VR MODE Cancel	Reject Call	End Call	End Call	End Call
		LONG [10sec]	-	-	Speaker Adaptation (Only English)	Speaker Adaptation (Only English)	-	-	-	-
3		SHORT	Active	Active	Active	Active	-	-	-	-
		LONG [10sec]	-	-	-	-	-	-	-	-

⚠ CAUTION IN USING BLUETOOTH® CELLULAR PHONE

- *Do not use a cellular phone or perform Bluetooth® settings (e.g. pairing a phone) while driving.*
- *Some Bluetooth®-enabled phones may not be recognized by the system or fully compatible with the system.*
- *Before using Bluetooth® related features of the audio system, refer your phone's User's Manual for phone-side Bluetooth® operations.*
- *The phone must be paired to the audio system to use Bluetooth® related features.*
- *You will not be able to use the hands-free feature when your phone (in the car) is outside of the cellular service area (e.g. in a tunnel, in a underground, in a mountainous area, etc.).*
- *If the cellular phone signal is poor or the vehicles interior noise is too loud, it may be difficult to hear the other person's voice during a call.*

(Continued)

(continued)

- *Do not place the phone near or inside metallic objects, otherwise communications with Bluetooth® system or cellular service stations can be disturbed.*
- *While a phone is connected through Bluetooth® your phone may discharge quicker than usual for additional Bluetooth®-related operations.*
- *Some cellular phones or other devices may cause interference noise or malfunction to audio system. In this case, store the device in a different location may resolve the situation.*
- *Please save your phone name in English, or your phone name may not be displayed correctly.*

Before driving / 5-3
Key positions / 5-4
Engine start/stop button / 5-8
ISG (Idle Stop and Go) system / 5-14
Manual transaxle / 5-19
Automatic transaxle / 5-22
Brake system / 5-29
Cruise control system / 5-48
Speed limit control system / 5-53
Lane keeping assist system (LKAS) / 5-56
Economical operation / 5-63

Driving your vehicle

5

Special driving conditions / 5-65
Winter driving / 5-69
Trailer towing / 5-73
Vehicle weight / 5-82

⚠ WARNING - ENGINE EXHAUST CAN BE DANGEROUS!

Engine exhaust fumes can be extremely dangerous. If, at any time, you smell exhaust fumes inside the vehicle, open the windows immediately.

- **Do not inhale exhaust fumes.**
  Exhaust fumes contain carbon monoxide, a colorless, odorless gas that can cause unconsciousness and death by asphyxiation.
- **Be sure the exhaust system does not leak.**
  The exhaust system should be checked whenever the vehicle is raised to change the oil or for any other purpose. If you hear a change in the sound of the exhaust or if you drive over something that strikes the underneath side of the vehicle, have the exhaust system checked as soon as possible by an authorized HYUNDAI dealer.
- **Do not run the engine in an enclosed area.**
  Letting the engine idle in your garage, even with the garage door open, is a hazardous practice. Never run the engine in your garage any longer than it takes to start the engine and back the vehicle out.
- **Avoid idling the engine for prolonged periods with people inside the vehicle.**
  If it is necessary to idle the engine for a prolonged period with people inside the vehicle, be sure to do so only in an open area with the air intake set at "Fresh" and fan operating at one of the higher speeds so fresh air is drawn into the interior.

If you must drive with the tailgate open because you are carrying objects that make this necessary:

1. Close all windows.
2. Open side vents.
3. Set the air intake control at "Fresh", the air flow control at "Floor" or "Face" and the fan at one of the higher speeds.

To assure proper operation of the ventilation system, be sure the ventilation air intakes located just in front of the windshield are kept clear of snow, ice, leaves or other obstructions.

BEFORE DRIVING

Before entering vehicle

- Be sure that all windows, outside mirror(s), and outside lights are clean.
- Check the condition of the tires.
- Check under the vehicle for any sign of leaks.
- Be sure there are no obstacles behind you if you intend to back up.

Necessary inspections

Fluid levels, such as engine oil, engine coolant, brake fluid, and washer fluid should be checked on a regular basis, with the exact interval depending on the fluid. Further details are provided in Section 7, “Maintenance”.

⚠ WARNING

Driving while distracted can result in a loss of vehicle control, that may lead to an accident, severe personal injury, and death. The driver’s primary responsibility is in the safe and legal operation of a vehicle, and use of any handheld devices, other equipment, or vehicle systems which take the driver’s eyes, attention and focus away from the safe operation of a vehicle or which are not permissible by law should never be used during operation of the vehicle.

Before starting

- Close and lock all doors.
- Position the seat so that all controls are easily reached.
- Adjust the inside and outside rearview mirrors.
- Be sure that all lights work.
- Check all gauges.
- Check the operation of warning lights when the ignition switch is turned to the ON position.
- Release the parking brake and make sure the brake warning light goes out.

For safe operation, be sure you are familiar with your vehicle and its equipment.

⚠ WARNING

All passengers must be properly belted whenever the vehicle is moving. Refer to “Seat belts” in section 3 for more information on their proper use.

⚠ WARNING

Always check the surrounding areas near your vehicle for people, especially children, before putting a vehicle into “D (Drive)” or “R (Reverse)”.

⚠ WARNING - Driving under the influence of alcohol or drugs

Drinking and driving is dangerous. Drunk driving is the number one contributor to the highway death toll each year. Even a small amount of alcohol will affect your reflexes, perceptions and judgement. Driving while under the influence of drugs is as dangerous or more dangerous than driving drunk.

You are much more likely to have a serious accident if you drink or take drugs and drive.

If you are drinking or taking drugs, don't drive. Do not ride with a driver who has been drinking or taking drugs. Choose a designated driver or call a cab.

⚠ WARNING

- **When you intend to park or stop the vehicle with the engine on, be careful not to depress the accelerator pedal for a long period of time. It may overheat the engine or exhaust system and cause fire.**
- **When you make a sudden stop or turn the steering wheel rapidly, loose objects may drop on the floor and it could interfere with the operation of the foot pedals, possibly causing an accident. Keep all things in the vehicle safely stored.**
- **If you do not focus on driving, it may cause an accident. Be careful when operating what may disturb driving such as audio or heater. It is the responsibility of the driver to always drive safely.**

KEY POSITIONS

OED046001

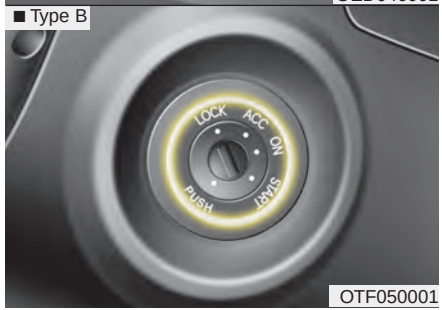

OTF050001

Illuminated ignition switch

Whenever a front door is opened, the ignition switch will be illuminated for your convenience, provided the ignition switch is not in the ON position. The light will go off immediately when the ignition switch is turned on or go off after about 30 seconds when the door is closed.

Ignition switch position

LOCK

The steering wheel locks to protect against theft. The ignition key can be removed only in the LOCK position. When turning the ignition switch to the LOCK position, push the key inward at the ACC position and turn the key toward the LOCK position.

ACC (Accessory)

The steering wheel is unlocked and electrical accessories are operative.

✻ NOTICE

If difficulty is experienced turning the ignition switch to the ACC position, turn the key while turning the steering wheel right and left to release the tension.

ON

The warning lights can be checked before the engine is started. This is the normal running position after the engine is started.

Do not leave the ignition switch ON if the engine is not running to prevent battery discharge.

START

Turn the ignition key to the START position to start the engine. The engine will crank until you release the key; then it returns to the ON position. The brake warning lamp can be checked in this position.

⚠ WARNING - Ignition key

- **Never turn the ignition switch to LOCK or ACC while the vehicle is moving. This would result in loss of directional control and braking function, which could cause an accident.**
- **The anti-theft steering column lock (if equipped) is not a substitute for the parking brake. Before leaving the driver's seat, always make sure the shift lever is engaged in 1st gear for the manual transaxle or P (Park) for the automatic transaxle, set the parking brake fully and shut the engine off. Unexpected and sudden vehicle movement may occur if these precautions are not taken.**
- **Never reach for the ignition switch, or any other controls through the steering wheel while the vehicle is in motion. The presence of your hand or arm in this area could cause a loss of vehicle control, an accident and serious bodily injury or death.**
- **Do not place any movable objects around the driver's seat as they may move while driving, interfere with the driver and lead to an accident.**

Starting the engine

⚠ WARNING

Always wear appropriate shoes when operating your vehicle. Unsuitable shoes (high heels, ski boots,etc.) may interfere with your ability to use the brake and accelerator pedal, and clutch (if equipped).

✻ NOTICE - Kick down mechanism

If your vehicle is equipped with a kick down mechanism in the accelerator pedal, it prevents you from driving at full throttle unintentionally by making the driver require increased effort to depress the accelerator pedal. However, if you depress the pedal more than approximately 80%, the vehicle can be at full throttle and the accelerator pedal will be easier to depress. This is not a malfunction but a normal condition.

Starting the gasoline engine

1. Make sure the parking brake is applied.
2. **Manual Transaxle** - Depress the clutch pedal fully and shift the transaxle into Neutral. Keep the clutch pedal and brake pedal depressed while turning the ignition switch to the start position.

   Automatic Transaxle - Place the transaxle shift lever in P (Park). Depress the brake pedal fully.

   You can also start the engine when the shift lever is in the N (Neutral) position.
3. Turn the ignition switch to START and hold it there until the engine starts (a maximum of 10 seconds), then release the key.
4. In extremely cold weather (below -18°C / 0°F) or after the vehicle has not been operated for several days, let the engine warm up without depressing the accelerator pedal.

Whether the engine is cold or warm, it should be started ***without depressing the accelerator pedal.***

⚠ CAUTION

If the engine stalls while you are in motion, do not attempt to move the shift lever to the P (Park) position. If traffic and road conditions permit, you may put the shift lever in the N (Neutral) position while the vehicle is still moving and turn the ignition switch to the START position in an attempt to restart the engine.

⚠ CAUTION

Do not engage the starter for more than 10 seconds. If the engine stalls or fails to start, wait 5 to 10 seconds before re-engaging the starter. Improper use of the starter may damage it.

Starting the diesel engine

To start the diesel engine when the engine is cold, it has to be pre-heated before starting the engine and then have to be warmed up before starting to drive.

1. Make sure the parking brake is applied.
2. **Manual Transaxle** - Depress the clutch pedal fully and shift the transaxle into Neutral. Keep the clutch pedal and brake pedal depressed while turning the ignition switch to the start position.

   Automatic Transaxle - Place the transaxle shift lever in P(park). Depress the brake pedal fully.

   You can also start the engine when the shift lever is in the N(neutral) position.

Glow indicator light

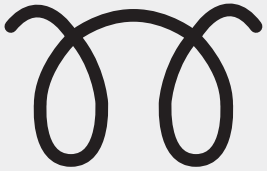

W-60

3. Turn the ignition switch to the ON position to pre-heat the engine. Then the glow indicator light will illuminate.
4. If the glow indicator light goes out, turn the ignition switch to the START position and hold it there until the engine starts (a maximum of 10 seconds), then release the key.

✻ NOTICE

If the engine does not start within 10 seconds after the preheating is completed, turn the ignition key once more to the LOCK position for 10 seconds, and then to the ON position, in order to preheat again.

Starting and stopping the engine for turbocharger intercooler

1. Do not race or accelerate the engine immediately after starting.

   If the engine is cold, idle for several seconds before sufficient lubrication is ensured in the turbocharger unit.
2. After high speed or extended driving, requiring a heavy engine load, run the engine on idle condition about 1 minute before turning it off.

   This idle time will allow the turbocharger to cool prior to shutting the engine off.

⚠ CAUTION

Do not turn off the engine immediately after it has been subjected to a heavy load. Doing so may cause severe damage to the engine or turbo charger unit.

ENGINE START/STOP BUTTON (IF EQUIPPED)

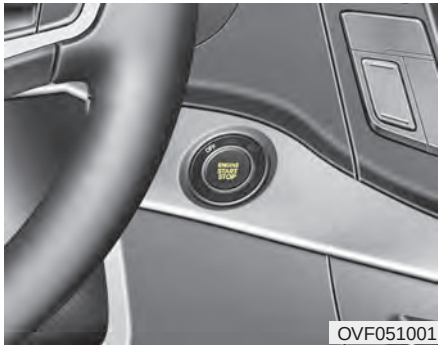

OVF051001

Illuminated engine start/stop button

Whenever the front door is opened, the engine start/stop button will illuminate for your convenience. The light will go off after about 30 seconds when the door is closed. It will also go off immediately when the theft-alarm system is armed.

Engine start/stop button position

OFF

White

With manual transaxle

To turn off the engine (START/RUN position) or vehicle power (ON position), stop the vehicle then press the engine start/stop button.

With automatic transaxle

To turn off the engine (START/RUN position) or vehicle power (ON position), press the engine start/stop button with the shift lever in the P (Park) position. When you press the engine start/stop button without the shift lever in the P (Park) position, the engine start/stop button will not change to the OFF position but to the ACC position.

Vehicles equipped with anti-theft steering column lock

The steering wheel locks when the engine start/stop button is in the OFF position to protect you against theft.

It locks when the door is opened.

If the steering wheel is not locked properly when you open the driver's door, the warning chime will sound. Try locking the steering wheel again. If the problem is not solved, have it checked by an authorized HYUNDAI dealer.

In addition, if the engine start/stop button is in the OFF position after the driver's door is opened, the steering wheel will not lock and the warning chime will sound. In such a situation, close the door. Then the steering wheel will lock and the warning chime will stop.

✻ NOTICE

If the steering wheel doesn't unlock properly, the engine start/stop button will not work. Press the engine start/stop button while turning the steering wheel right and left to release the tension.

⚠ **CAUTION**

You are able to turn off the engine (START/RUN) or vehicle power (ON), only when the vehicle is not in motion. In an emergency situation while the vehicle is in motion, you are able to turn the engine off and to the ACC position by pressing the engine start/stop button for more than 2 seconds or 3 times successively within 3 seconds. If the vehicle is still moving, you can restart the engine without depressing the brake pedal by pressing the engine start/stop button with the shift lever in the N (Neutral) position.

ACC(Accessory)

Orange

With manual transaxle

Press the engine start/stop button when the button is in the OFF position without depressing the clutch pedal.

With automatic transaxle

Press the engine start/stop button while it is in the OFF position without depressing the brake pedal.

The steering wheel unlocks (if equipped with anti-theft steering column lock) and electrical accessories are operational.
If the engine start/stop button is in the ACC position for more than 1 hour, the button is turned off automatically to prevent battery discharge.

ON

Blue

With manual transaxle

Press the engine start/stop button when the button is in the ACC position without depressing the clutch pedal.

With automatic transaxle

Press the engine start/stop button while it is in the ACC position without depressing the brake pedal.

The warning lights can be checked before the engine is started. Do not leave the engine start/stop button in the ON position for a long time. The battery may discharge, because the engine is not running.

START/RUN

Not illuminated

With manual transaxle

To start the engine, depress the clutch pedal and brake pedal, then press the engine start/stop button with the shift lever in the N (Neutral) position.

With automatic transaxle

To start the engine, depress the brake pedal and press the engine start/stop button with the shift lever in the P (Park) or the N (Neutral) position. For your safety, start the engine with the shift lever in the P (Park) position.

✻ NOTICE

If you press the engine start/stop button without depressing the clutch pedal for manual transaxle vehicles or without depressing the brake pedal for automatic transaxle vehicles, the engine will not start and the engine start/stop button changes as follow:
OFF ➔ACC ➔ ON ➔ OFF or ACC

✻ NOTICE

If you leave the engine start/stop button in the ACC or ON position for a long time, the battery will discharge.

⚠ WARNING

- **Never press the engine start/stop button while the vehicle is in motion. This would result in loss of directional control and braking function, which could cause an accident.**
- **The anti-theft steering column lock (if equipped) is not a substitute for the parking brake. Before leaving the driver's seat, always make sure the shift lever is engaged in P (Park), set the parking brake fully and shut the engine off. Unexpected and sudden vehicle movement may occur if these precautions are not taken.**

(Continued)

(Continued)

- **Never reach for the engine start/stop button or any other controls through the steering wheel while the vehicle is in motion. The presence of your hand or arm in the area could cause loss of vehicle control, an accident and serious bodily injury or death.**
- **Do not place any movable objects around the driver's seat as they may move while driving, interfere with the driver and lead to an accident.**

Starting the engine

⚠ WARNING

Always wear appropriate shoes when operating your vehicle. Unsuitable shoes (high heels, ski boots,etc.) may interfere with your ability to use the brake and accelerator pedal.

Starting the gasoline engine

1. Carry the smart key or leave it inside the vehicle.
2. Make sure the parking brake is firmly applied.
3. **Manual Transaxle** - Depress the clutch pedal fully and shift the transaxle into Neutral. Keep the clutch pedal and brake pedal depressed while starting the engine.

   Automatic Transaxle - Place the transaxle shift lever in P (Park). Depress the brake pedal fully.

   You can also start the engine when the shift lever is in the N (Neutral) position.
4. Press the engine start/stop button.
5. In extremely cold weather (below -18°C / 0°F) or after the vehicle has not been operated for several days, let the engine warm up without depressing the accelerator.

Whether the engine is cold or warm, it should be started without depressing the accelerator.

Starting the diesel engine

To start the diesel engine when the engine is cold, it has to be pre-heated before starting the engine and then have to be warmed up before starting to drive.

1. Make sure the parking brake is applied.
2. **Manual Transaxle** - Depress the clutch pedal fully and shift the transaxle into Neutral. Keep the clutch pedal and brake pedal depressed while pressing the engine start/stop button to the START position.

   Automatic Transaxle - Place the transaxle shift lever in P (Park). Depress the brake pedal fully.

   You can also start the engine when the shift lever is in the N (Neutral) position.

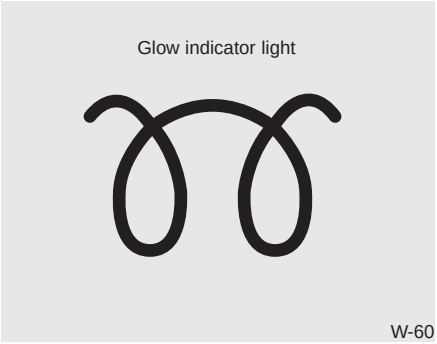

3. Press the engine start/stop button while depressing the brake pedal.
4. Continue depressing the brake pedal until the illuminated glow indicator goes off. (approximately 5 seconds)
5. The engine starts running when the glow indicator goes off.

✻ NOTICE

If the engine start/stop button is pressed once more while the engine is pre-heating, the engine may start.

Starting and stopping the engine for turbocharger intercooler

1. Do not race or accelerate the engine immediately after starting.

   If the engine is cold, idle for several seconds before sufficient lubrication is ensured in the turbocharger unit.
2. After high speed or extended driving, requiring a heavy engine load, idle the engine about 1 minute before turning it off.

   This idle time will allow the turbocharger to cool prior to shutting the engine off.

⚠ CAUTION

Do not turn the engine off immediately after it has been subjected to a heavy load. Doing so may cause severe damage to the engine or turbocharger unit.

- Even if the smart key is in the vehicle, if it is far away from you, the engine may not start.
- When the engine start/stop button is in the ACC position or above, if any door is opened, the system checks for the smart key. If the smart key is not in the vehicle, a message “Key is not in the vehicle” will appear on the LCD display. And if all doors are closed, the chime will sound for 5 seconds. The indicator or warning will turn off while the vehicle is moving. Always have the smart key with you.

⚠ WARNING

The engine will start, only when the smart key is in the vehicle.

Never allow children or any person who is unfamiliar with the vehicle touch the engine start/stop button or related parts.

⚠ CAUTION

If the engine stalls while the vehicle is in motion, do not attempt to move the shift lever to the P (Park) position. If the traffic and road conditions permit, you may put the shift lever in the N (Neutral) position while the vehicle is still moving and press the engine start/stop button in an attempt to restart the engine.

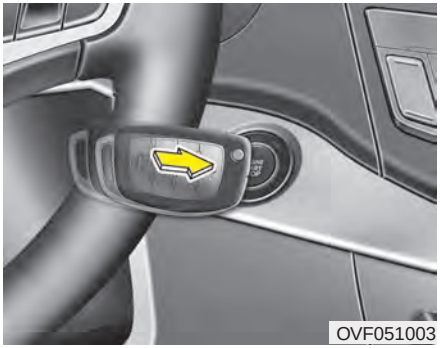

✻ NOTICE

- **If the battery is weak or the smart key does not work correctly, you can start the engine by pressing the engine start/stop button with the smart key.**
- **When the stop lamp fuse is blown, you cannot start the engine normally. Replace the fuse with a new one. If it is not possible, you can start the engine by pressing the engine start/stop button for 10 seconds while it is in the ACC position. The engine can start without depressing the brake pedal. But for your safety always depress the brake pedal before starting the engine.**

⚠ CAUTION

Do not press the engine start/stop button for more than 10 seconds except when the stop lamp fuse is blown.

ISG (IDLE STOP AND GO) SYSTEM (IF EQUIPPED)

Your vehicle may be equipped with the ISG system, which reduces fuel consumption by automatically shutting down the engine, when the vehicle is at a standstill. (For example : red light, stop sign and traffic jam)

The engine starts automatically as soon as the starting conditions are met.

The ISG system is ON whenever the engine is running.

✻ NOTICE

When the engine automatically starts by the ISG system, some warning lights (ABS, ESP, ESP OFF, EPS or Parking brake warning light) may turn on for a few seconds.
This happens because of low battery voltage. It does not mean the system has malfunctioned.

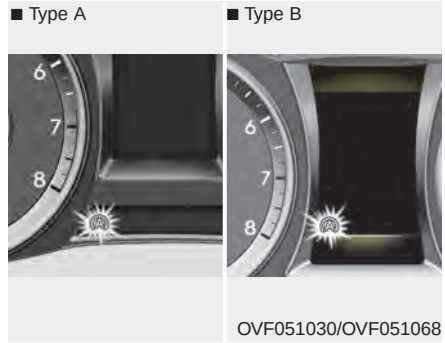

OVF051030/OVF051068

Auto stop

To stop the engine in idle stop mode

1. Decrease the vehicle speed to less than 5 km/h (3 mph).
2. Shift into N (Neutral) position.
3. Release the clutch pedal.

The engine will stop and the green AUTO STOP(Ⓐ) indicator on the instrument cluster will illuminate.

OVF051040

Also, a message "Auto Stop" will appear on the LCD display.

✻ NOTICE

You must reach a speed of at least 10 km/h (6 mph) since last idle stop.

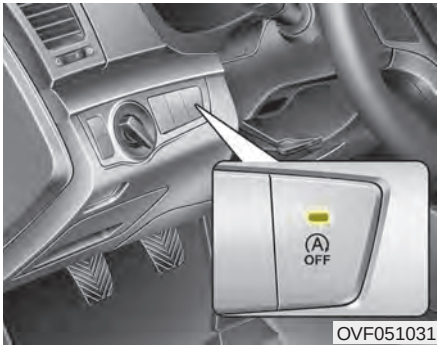

OVF051031

✻ NOTICE

If you unfasten the seatbelt or open the driver's door (or engine hood) in auto stop mode, the following will happen:

- **The ISG system will deactivate (the light on the ISG OFF button will illuminate).**

(Continued)

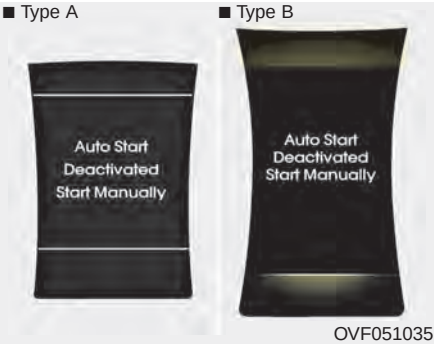

OVF051035

(Continued)

- **A message "Auto Start Deactivated Start Manually" will appear on the LCD display.**

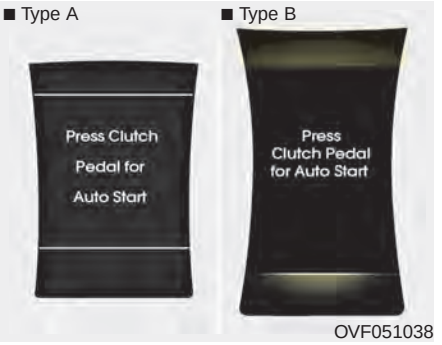

OVF051038

Auto start

To restart the engine from idle stop mode

- Press the clutch pedal when the shift lever is in the N (Neutral) position.
- A message "Press Clutch Pedal for Auto Start" will appear on the LCD display.
- The engine will start and the green AUTO STOP (Ⓐ) indicator on the instrument cluster will go out.

The engine will also restart automatically without the driver's any actions if the following occurs:

- The fan speed of manual climate control system is set above the 3rd position when the air conditioning is on.
- The fan speed of automatic climate control system is set above the 6th position when the air conditioning is on.
- When a certain amount of time has passed with the climate control system on.
- When the defroster is on.
- The brake vaccum pressure is low.
- The battery charging status is low.
- The vehicle speed exceeds 5 km/h (3 mph).

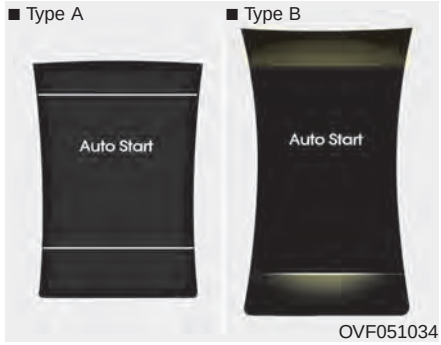

The green AUTO STOP (Ⓐ) indicator on the instrument cluster will blink for 5 seconds and a message "Auto Start" will appear on the LCD display.

Condition of ISG system operation

The ISG system will operate under the following condition:

- The driver's seat belt is fastened.
- The driver's door and engine hood are closed.
- The brake vaccum pressure is adequate.
- The battery is sufficiently charged.
- The outside temperature is between -2°C to 35°C (28.4°F to 95°F).
- The engine coolant temperature is not too low.

OVF051031/OVF051036

✻ NOTICE

- **If the ISG system does not meet the operation condition, the ISG system is deactivated. The light on the ISG OFF button will illuminate and a message "Auto Stop Deactivated" will appear on the LCD display.**
- **If the light or notice comes on continuously, please check the operation condition.**

OVF051031/OVF051032

ISG system deactivation

- If you wish to deactivate the ISG system, press the ISG OFF button. The light on the ISG OFF button will illuminate and a message "Auto Stop Off" will appear on the LCD display.
- If you press the ISG OFF button again, the system will be activated and the light on the ISG OFF button will turn off.

ISG system malfunction

The system may not operate when:

The ISG related sensors or system error occurs.

The following will happen:

- The yellow AUTO STOP (Ⓐ) indicator on the instrument cluster will stay on after blinking for 5 seconds.

■ Type A ■ Type B

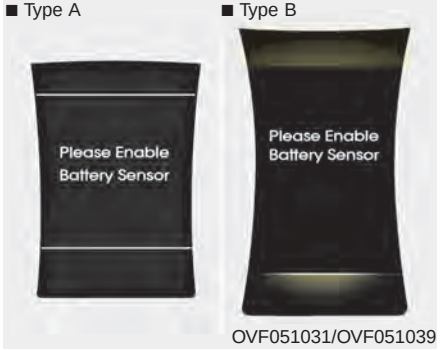

OVF051031/OVF051039

- The light on the ISG OFF button will illuminate.
- A message "Please Enable Battery Sensor" will appear on the LCD display.

✻ NOTICE

- **If the ISG OFF button light is not turned off by pressing the ISG OFF button again or if the ISG system continuously does not work correctly, please contact an authorized HYUNDAI dealer as soon as possible.**
- **When the ISG OFF button light comes on, it may stop illuminating after driving your vehicle at approximately 80 km/h for a maximum of two hours and setting the fan speed control below the 2nd position. If the ISG OFF button light continues to illuminate in spite of the procedure, please contact an authorized HYUNDAI dealer as soon as possible.**

⚠ WARNING

When the engine is in Idle Stop mode, it's possible to restart the engine without the driver taking any action.

Before leaving the car or doing anything in the engine room area, stop the engine by turning the ignition switch to the LOCK/OFF position or removing the ignition key.

MANUAL TRANSAXLE (IF EQUIPPED)

⇨ The shift lever can be moved without pushing the button (1).

➡ The button (1) must be pushed while moving the shift lever.

OVF051004

Manual transaxle operation

- The manual transaxle has 6 forward gears.

  This shift pattern is imprinted on the shift knob. The transaxle is fully synchronized in all forward gears so shifting to either a higher or a lower gear is easily accomplished.

- Depress the clutch pedal down fully while shifting, then release it slowly.

  If your vehicle is equipped with an ignition lock switch, the engine will not start when starting the engine without depressing the clutch pedal.

- The shift lever must return to the neutral position before shifting into R (Reverse). The button located immediately below the shift knob must be pushed upward while moving the shift lever to the R (Reverse) position.

- *Make sure the vehicle is completely stopped before shifting into R (Reverse).*

  Never operate the engine with the tachometer (rpm) in the red zone.

⚠ CAUTION

- ***When downshifting from 5 (Fifth) gear to 4 (Fourth) gear, caution should be taken not to inadvertently move the shift lever sideways in such a manner that second gear is engaged. Such a drastic downshift may cause the engine speed to increase to the point that the tachometer will enter the red-zone. Such overrevving of the engine may possibly cause engine and transaxle damage.***
- ***Do not downshift more than 2 gears or downshift the gear when the engine is running at high speed (5,000 RPM or higher). Such a downshifting may damage the engine.***

- During cold weather, shifting may be difficult until the transaxle lubricant has warmed up. This is normal and not harmful to the transaxle.
- If you've come to a complete stop and it's hard to shift into 1 (First) or R (Reverse), put the shift lever in neutral position and release the clutch. Press the clutch pedal back down, and then shift into 1 (First) or R (Reverse) gear position.

⚠ CAUTION

- ***To avoid premature clutch wear and damage, do not drive with your foot resting on the clutch pedal. Also, don't use the clutch to hold the vehicle stopped on an uphill grade, while waiting for a traffic light, etc.***
- ***Do not use the shift lever as a handrest during driving, as this can result in premature wear of the transaxle shift forks.***

⚠ WARNING

- **Before leaving the driver's seat, always set the parking brake fully and shut the engine off. Then make sure the transaxle is shifted into 1 (First) gear when the vehicle is parked on a level or uphill grade, and shifted into R (Reverse) on a downhill grade.**

  Unexpected and sudden vehicle movement can occur if these precautions are not followed in the order identified.
- **If your vehicle has a manual transaxle not equipped with a ignition lock switch, it may move and cause a serious accident when starting the engine without depressing the clutch pedal while the parking brake is released and the shift lever not in the neutral position.**

Using the clutch

The clutch pedal should be depressed all the way to the floor before shifting, then released slowly. The clutch pedal should always be fully released while driving. Do not rest your foot on the clutch pedal while driving. This can cause unnecessary wear. Do not partially engage the clutch to hold the vehicle on an incline. This causes unnecessary wear. Use the foot brake or parking brake to hold the vehicle on an incline. Do not operate the clutch pedal rapidly and repeatedly.

⚠ CAUTION

When operating the clutch pedal, depress the clutch pedal down fully. If you don't depress the clutch pedal fully, the clutch may be damaged or noise may occur.

Downshifting

When you must slow down in heavy traffic or while driving up steep hills, downshift before the engine starts to labor. Downshifting reduces the chance of stalling and gives better acceleration when you again need to increase your speed. When the vehicle is traveling down steep hills, downshifting helps maintain safe speed and prolongs brake life.

Good driving practices

- Never take the vehicle out of gear and coast down a hill. This is extremely hazardous. Always leave the vehicle in gear.
- Don't "ride" the brakes. This can cause them to overheat and malfunction. Instead, when you are driving down a long hill, slow down and shift to a lower gear. When you do this, engine braking will help slow down the vehicle.
- Slow down before shifting to a lower gear. This will help avoid over-revving the engine, which can cause damage.
- Slow down when you encounter cross winds. This gives you much better control of your vehicle.
- Be sure the vehicle is completely stopped before you attempt to shift into R (Reverse). The transaxle can be damaged if you do not. To shift into R (Reverse), depress the clutch, move the shift lever to neutral, wait three seconds, then shift to the R (Reverse) position.
- Exercise extreme caution when driving on a slippery surface. Be especially careful when braking, accelerating or shifting gears. On a slippery surface, an abrupt change in vehicle speed can cause the drive wheels to lose traction and the vehicle to go out of control.

⚠ WARNING

- **Always buckle-up! In a collision, an unbelted occupant is significantly more likely to be seriously injured or killed than a properly belted occupant.**
- **Avoid high speeds when cornering or turning.**
- **Do not make quick steering wheel movements, such as sharp lane changes or fast, sharp turns.**
- **The risk of rollover is greatly increased if you lose control of your vehicle at highway speeds.**
- **Loss of control often occurs if two or more wheels drop off the roadway and the driver oversteers to reenter the roadway.**
- **In the event your vehicle leaves the roadway, do not steer sharply. Instead, slow down before pulling back into the travel lanes.**
- **Never exceed posted speed limits.**

AUTOMATIC TRANSAXLE (IF EQUIPPED)

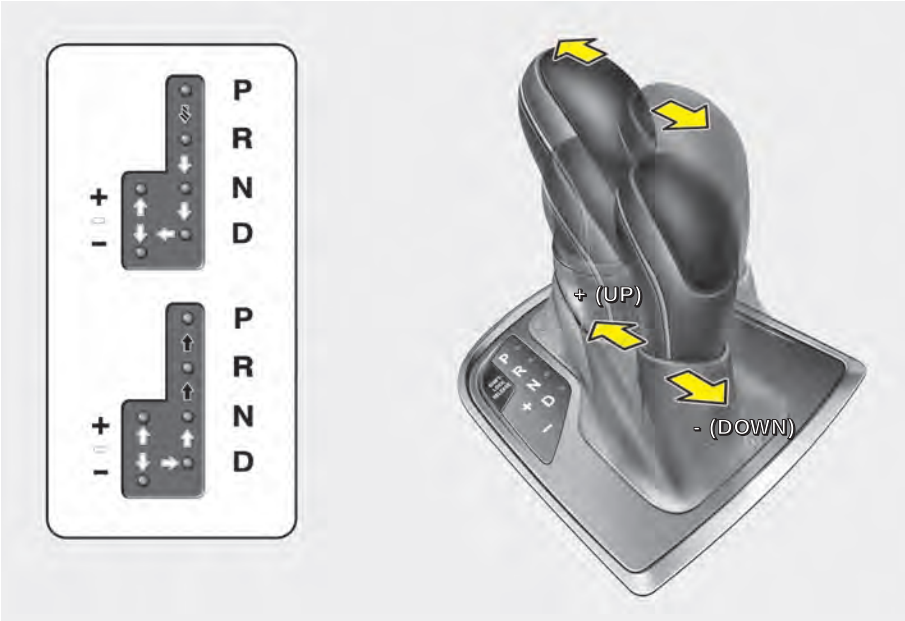

Depress the brake pedal and the lock release button when shifting.
(If the shift lock system is not equipped, it is not necessary to depress the brake pedal. However, it is recommended to depress the brake pedal to avoid inadvertent movement of the vehicle.)

Press the lock release button when shifting.

The shift lever can be shifted freely.

OVF051005

Automatic transaxle operation

The highly efficient automatic transaxle has 6 forward speeds and one reverse speed. The individual speeds are selected automatically, depending on the position of the shift lever.

✻ NOTICE

The first few shifts on a new vehicle, if the battery has been disconnected, may be somewhat abrupt. This is a normal condition, and the shifting sequence will adjust after shifts are cycled a few times by the TCM (Transaxle Control Module) or PCM (Powertrain Control Module).

For smooth operation, depress the brake pedal when shifting from N (Neutral) to a forward or reverse gear.

⚠ WARNING - Automatic transaxle

- **Always check the surrounding areas near your vehicle for people, especially children, before shifting a vehicle into D (Drive) or R (Reverse).**
- **Before leaving the driver's seat, always make sure the shift lever is in the P (Park) position; then set the parking brake fully and shut the engine off. Unexpected and sudden vehicle movement can occur if these precautions are not followed in the order identified.**

⚠ CAUTION

- ***To avoid damage to your transaxle, do not accelerate the engine in R (Reverse) or any forward gear position with the brakes on.***
- ***When stopped on an upgrade, do not hold the vehicle stationary with engine power. Use the service brake or the parking brake.***
- ***Do not shift from N (Neutral) or P (Park) into D (Drive), or R (Reverse) when the engine is above idle speed.***

Transaxle ranges

The indicator lights in the instrument cluster displays the shift lever position when the ignition switch is in the ON position.

P (Park)

Always come to a complete stop before shifting into P (Park). This position locks the transaxle and prevents the front wheels from rotating.

⚠ WARNING

- **Shifting into P (Park) while the vehicle is in motion will cause the drive wheels to lock which will cause you to lose control of the vehicle.**
- **Do not use the P (Park) position in place of the parking brake. Always make sure the shift lever is latched in the P (Park) position and set the parking brake fully.**
- **Never leave a child unattended in a vehicle.**

⚠ CAUTION

The transaxle may be damaged if you shift into P (Park) while the vehicle is in motion.

R (Reverse)

Use this position to drive the vehicle backward.

⚠ CAUTION

Always come to a complete stop before shifting into or out of R (Reverse); you may damage the transaxle if you shift into R (Reverse) while the vehicle is in motion, except as explained in "Rocking the vehicle", in this manual.

N (Neutral)

The wheels and transaxle are not engaged. The vehicle will roll freely even on the slightest incline unless the parking brake or service brakes are applied.

D (Drive)

This is the normal forward driving position. The transaxle will automatically shift through a 6-gear sequence, providing the best fuel economy and power.

For extra power when passing another vehicle or climbing grades, depress the accelerator pedal fully (more than 80%) until the kick down mechanism works with a clicking noise, at which time the transaxle will automatically downshift to the next lower gear.

✻ NOTICE

- **Always come to a complete stop before shifting into D (Drive).**
- **A clicking noise heard from the kick down mechanism by depressing the accelerator pedal fully is a normal condition.**

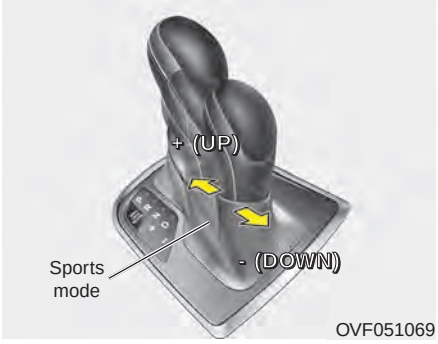

Sports mode

Whether the vehicle is stationary or in motion, sports mode is selected by pushing the shift lever from the D (Drive) position into the manual gate. To return to D (Drive) range operation, push the shift lever back into the main gate.

In sports mode, moving the shift lever backwards and forwards will allow you to make gearshifts rapidly. In contrast to a manual transaxle, the sports mode allows gearshifts with the accelerator pedal depressed.

Up (+) : Push the lever forward once to shift up one gear.

Down (-) : Pull the lever backwards once to shift down one gear.

✻ NOTICE

- **In sports mode, the driver must execute upshifts in accordance with road conditions, taking care to keep the engine speed below the red zone.**
- **In sports mode, only the 6 forward gears can be selected. To reverse or park the vehicle, move the shift lever to the R (Reverse) or P (Park) position as required.**
- **In sports mode, downshifts are made automatically when the vehicle slows down. When the vehicle stops, 1st gear is automatically selected.**
- **In sports mode, when the engine rpm approaches the red zone shift points are varied to upshift automatically.**
- **To maintain the required levels of vehicle performance and safety, the system may not execute certain gearshifts when the shift lever is operated.**
- **When driving on a slippery road, push the shift lever forward into the +(up) position. This causes the transaxle to shift into the 2nd gear which is better for smooth driving on a slippery road. Push the shift lever to the -(down) side to shift back to the 1st gear.**

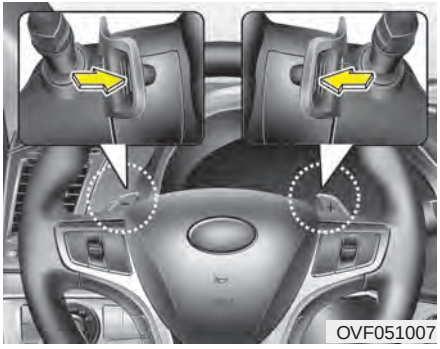

Paddle shifter (if equipped)

The paddle shifter is available when the shift lever is in the D (Drive) position or the sports mode.

With the shift lever in the D position

The paddle shifter will operate when the vehicle speed is more than 10km/h.

Pull the [+] or [-] paddle shifter once to shift up or down one gear and the system changes from automatic mode to manual mode.

When the vehicle speed is lower than 10km/h, if you depress the accelerator pedal for more than 5 seconds or if you shift the shift lever from D (Drive) to sports mode and shift it from sports mode to D (Drive) again, the system changes from manual mode to automatic mode.

With the shift lever in the sports mode

Pull the [+] or [-] paddle shifter once to shift up or down one gear.

✻ NOTICE

If you pull the [+] and [-] paddle shifters at the same time, you cannot shift the gear.

■ Type A

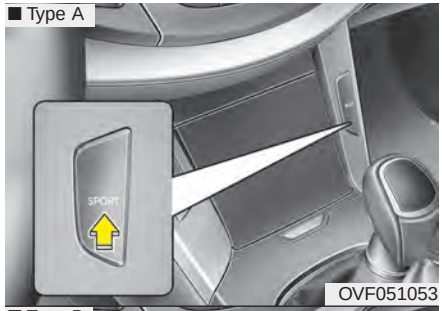

OVF051053

■ Type B

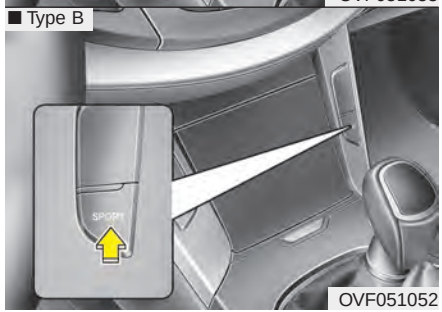

OVF051052

Sport drive mode (if equipped)

Sport drive mode focuses on dynamic driving by automatically controlling the shift pattern.

To activate the system push the SPORT button. An indicator on the instrument cluster will illuminate.

If the system is activated:

- The shift pattern changes when compared to normal mode.
- Up-shifting is delayed.
- After speeding, it maintains the gear and RPM for some time even though the accelerator pedal is not depressed.

To turn off the system push the SPORT button again. The indicator on the instrument cluster will turn off.

✻ NOTICE

In Sport drive mode, the fuel efficiency may decrease.

Shift lock system (if equipped)

For your safety, the automatic transaxle has a shift lock system which prevents shifting the transaxle from P (Park) or N (Neutral) into R (Reverse) unless the brake pedal is depressed.

To shift the transaxle from P (Park) or N (Neutral) into R (Reverse):

1. Depress and hold the brake pedal.
2. Start the engine or turn the ignition switch to the ON position.
3. Move the shift lever.

If the brake pedal is repeatedly depressed and released with the shift lever in the P (Park) position, a chattering noise near the shift lever may be heard. This is a normal condition.

⚠ WARNING

Always fully depress the brake pedal before and while shifting out of the P (Park) position into another position to avoid inadvertent motion of the vehicle which could injure persons in or around the vehicle.

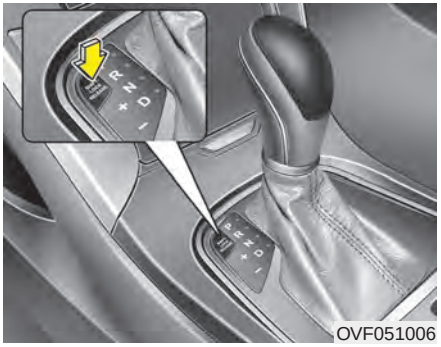

OVF051006

Shift-lock override

If the shift lever cannot be moved from the P (Park) or N (Neutral) position into R (Reverse) position with the brake pedal depressed, continue depressing the brake, then do the following:

Type A
1. Press the shift-lock release button.
2. Move the shift lever.
3. Have your vehicle inspected by an authorized HYUNDAI dealer immediately.

Type B
1. Carefully remove the cap covering the shift-lock override access hole.
2. Insert a screwdriver (or key) into the access hole and press down on the screwdriver (or key).
3. Move the shift lever.
4. Have your vehicle inspected by an authorized HYUNDAI dealer immediately.

Ignition key interlock system (if equipped)

The ignition key cannot be removed unless the shift lever is in the P (Park) position.

Good driving practices

- Never move the shift lever from P (Park) or N (Neutral) to any other position with the accelerator pedal depressed.
- Never move the shift lever into P (Park) when the vehicle is in motion.
- Be sure the vehicle is completely stopped before you attempt to shift into R (Reverse) or D (Drive).
- Never take the vehicle out of gear and coast down a hill. This may be extremely hazardous. Always leave the vehicle in gear when moving.
- Do not "ride" the brakes. This can cause them to overheat and malfunction. Instead, when you are driving down a long hill, slow down and shift to a lower gear. When you do this, engine braking will help slow down the vehicle.
- Slow down before shifting to a lower gear. Otherwise, the lower gear may not be engaged.
- Always use the parking brake. Do not depend on placing the transaxle in P (Park) to keep the vehicle from moving.

- Exercise extreme caution when driving on a slippery surface. Be especially careful when braking, accelerating or shifting gears. On a slippery surface, an abrupt change in vehicle speed can cause the drive wheels to lose traction and the vehicle to go out of control.
- Optimum vehicle performance and economy is obtained by smoothly depressing and releasing the accelerator pedal.

⚠ WARNING

- **Always buckle-up! In a collision, an unbelted occupant is significantly more likely to be seriously injured or killed than a properly belted occupant.**
- **Avoid high speeds when cornering or turning.**
- **Do not make quick steering wheel movements, such as sharp lane changes or fast, sharp turns.**
- **The risk of rollover is greatly increased if you lose control of your vehicle at highway speeds.**
- **Loss of control often occurs if two or more wheels drop off the roadway and the driver oversteers to reenter the roadway.**
- **In the event your vehicle leaves the roadway, do not steer sharply. Instead, slow down before pulling back into the travel lanes.**
- **Never exceed posted speed limits.**

⚠ WARNING

If your vehicle becomes stuck in snow, mud, sand, etc., then you may attempt to rock the vehicle free by moving it forward and backward. Do not attempt this procedure if people or objects are anywhere near the vehicle. During the rocking operation the vehicle may suddenly move forward of backward as it becomes unstuck, causing injury or damage to nearby people or objects.

Moving up a steep grade from a standing start

To move up a steep grade from a standing start, depress the brake pedal, shift the shift lever to D (Drive). Select the appropriate gear depending on load weight and steepness of the grade, and release the parking brake. Depress the accelerator gradually while releasing the service brakes.

BRAKE SYSTEM

Power brakes

Your vehicle has power-assisted brakes that adjust automatically through normal usage.

In the event that the power-assisted brakes lose power because of a stalled engine or some other reason, you can still stop your vehicle by applying greater force to the brake pedal than you normally would. The stopping distance, however, will be longer.

When the engine is not running, the reserve brake power is partially depleted each time the brake pedal is applied. Do not pump the brake pedal when the power assist has been interrupted.

Pump the brake pedal only when necessary to maintain steering control on slippery surfaces.

⚠ WARNING - Brakes

- **Do not drive with your foot resting on the brake pedal. This will create abnormal high brake temperatures, excessive brake lining and pad wear, and increased stopping distances.**
- **When descending a long or steep hill, shift to a lower gear and avoid continuous application of the brakes. Continuous brake application will cause the brakes to overheat and could result in a temporary loss of braking performance.**
- **Wet brakes may impair the vehicle's ability to sefely slow down; the vehicle may also pull to one side when the brakes are applied. Applying the brakes lightly will indicate whether they have been affected in this way. Always test your brakes in this fashion after driving through deep water. To dry the brakes, apply them lightly while maintaining a safe forward speed until brake performance returns to normal.**

(Continued)

(Continued)

- **Always, confirm the position of the brake and accelerator pedal before driving. If you don't check the position of the accelerator and brake pedal before driving, you may depress the accelerator instead of the brake pedal. It may cause a serious accident.**

In the event of brake failure

If service brakes fail to operate while the vehicle is in motion, you can make an emergency stop with the parking brake. The stopping distance, however, will be much greater than normal.

⚠ WARNING - Parking brake

Applying the parking brake while the vehicle is moving at normal speeds can cause a sudden loss of control of the vehicle. If you must use the parking brake to stop the vehicle, use great caution in applying the brake.

Disc brakes wear indicator

When your brake pads are worn and new pads are required, you will hear a high-pitched warning sound from your front brakes or rear brakes. You may hear this sound come and go or it may occur whenever you depress the brake pedal.

Please remember that some driving conditions or climates may cause a brake squeal when you first apply (or lightly apply) the brakes. This is normal and does not indicate a problem with your brakes.

⚠ CAUTION

- ***To avoid costly brake repairs, do not continue to drive with worn brake pads.***
- ***Always replace the front or rear brake pads as pairs.***

⚠ WARNING - Brake wear

This brake wear warning sound means your vehicle needs service. If you ignore this audible warning, you will eventually lose braking performance, which could lead to a serious accident.

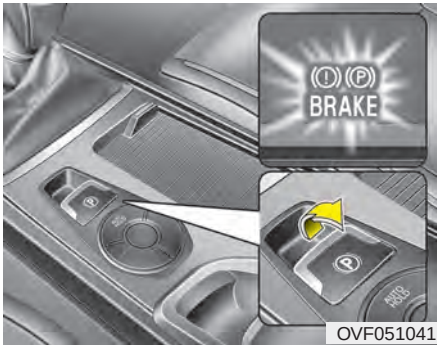

OVF051041

Electric parking brake (EPB)

Applying the parking brake

To apply the EPB (electric parking brake):

1. Depress the brake pedal.
2. Pull up the EPB switch.

Make sure the warning light comes on.

Also, the EPB is applied automatically if the Auto Hold button is on when the engine is turned off. However, if you keep pressing the EPB switch till the engine is turned off, the EPB will not be applied.

✻ NOTICE

On a steep incline or when pulling a trailer if the vehicle does not stand still, do as follows:

1. Apply the EPB.
2. Pull up the EPB switch for more than 3 seconds.

⚠ CAUTION

Do not operate the parking brake while the vehicle is moving except in an emergency situation. It could damage the vehicle system and endanger driving safety.

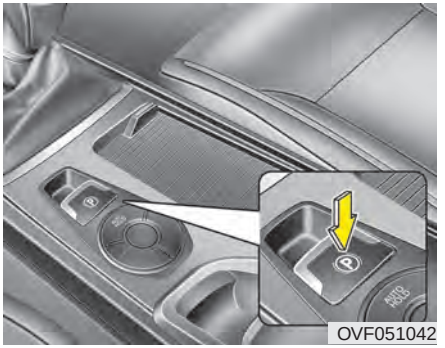

OVF051042

Releasing the parking brake

To release the EPB (electric parking brake), press the EPB switch in the following condition:

- Have the ignition switch or engine start/stop button in the ON position.
- Depress the brake pedal.

Make sure the brake warning light goes off.

To release EPB (electric parking brake) automatically:

- Shift lever in P (Park)
  With the engine running depress the brake pedal and shift out of P (Park) to R (Rear) or D (Drive).
- Shift lever in N (Neutral)
  With the engine running depress the brake pedal and shift out of N (Neutral) to R (Rear) or D (Drive).
- Manual transaxle vehicle
  1. Start the engine.
  2. Fasten the driver's seat belt.
  3. Close the driver's door, engine hood and tailgate.
  4. Depress the clutch pedal with the gear engaged.
  5. Depress the accelerator pedal while releasing the clutch pedal.
- Automatic transaxle vehicle
  1. Start the engine.
  2. Fasten the driver's seat belt.
  3. Close the driver's door, engine hood and tailgate.
  4. Depress the accelerator pedal while the shift lever is in R (Rear), D (Drive) or Sports mode.

Make sure the brake warning light goes off.

✻ NOTICE

- **For your safety, you can engage the EPB even though the ignition switch or engine stop/start button is in the OFF position, but you cannot release it.**
- **For your safety, depress the brake pedal and release the parking brake manually with the EPB switch when you drive downhill or when backing up the vehicle.**

✻ NOTICE - Manual transaxle

A vehicle towing a trailer on a hill or on an incline may slightly roll backwards when starting the vehicle. To prevent the situation follow the below instructions.

1. **Depress the clutch pedal and select a gear.**
2. **Keep pulling up the EPB switch.**
3. **Depress the accelerator pedal and slowly release the clutch pedal.**
4. **If the vehicle starts off with enough driving power release the EPB switch.**

Do not follow the above procedure when driving on a flat level ground. The vehicle may suddenly move forward.

⚠ CAUTION

- ***If the parking brake warning light is still on even though the EPB has been released, have the system checked by an authorized HYUNDAI dealer.***
- ***Do not drive your vehicle with the EPB applied. It may cause excessive brake pad and brake rotor wear.***

EPB (electric parking brake) may be automatically applied when:

- The EPB is overheated
- Requested by other systems

✻ NOTICE

If the driver turns the engine off by mistake while Auto Hold is operating, EPB will be automatically applied. (Vehicle's equipped with Auto Hold)

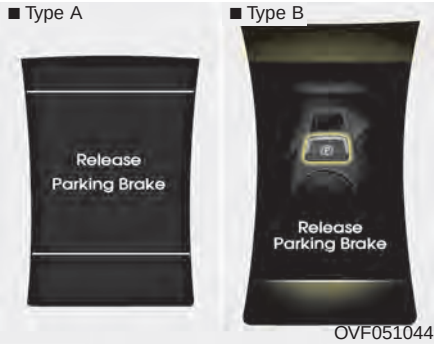

- If you try to drive off depressing the accelerator pedal with the EPB applied, but doesn't release automatically, a warning will sound and a message will appear.
- If the driver's seat belt is not fastened and the engine hood or tailgate is opened, a warning will sound and a message will appear.
- If there is a problem with the vehicle, a warning may sound and a message may appear.

If the above situation occurs, depress the brake pedal and release EPB by pressing the EPB switch.

⚠ WARNING

- **To prevent unintentional movement when stopped and leaving the vehicle, do not use the shift lever in place of the parking brake. Set the parking brake and make sure the shift lever is securely positioned in P (Park).**
- **Never allow anyone who is unfamiliar with the vehicle to touch the parking brake. If the parking brake is released unintentionally, serious injury may occur.**
- **All vehicles should always have the parking brake fully engaged when parking to avoid inadvertent movement of the car which can injure occupants or pedestrians.**

⚠ CAUTION

- ***A click sound may be heard while operating or releasing the EPB, but these conditions are normal and indicate that the EPB is functioning properly.***
- ***When leaving your keys with a parking lot attendant or valet, make sure to inform him/her how to operate the EPB.***
- ***The EPB may malfunction if you drive with the EPB applied.***
- ***When you automatically release EPB by depressing the accelerator pedal, depress it slowly.***

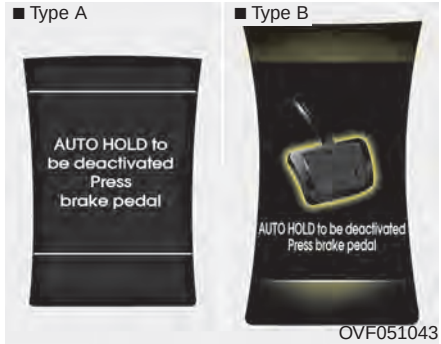

When the conversion from Auto Hold to EPB is not working properly a warning will sound and a message will appear.

⚠ CAUTION

Depress the brake pedal when the above message appears for the Auto Hold and EPB may not activate.

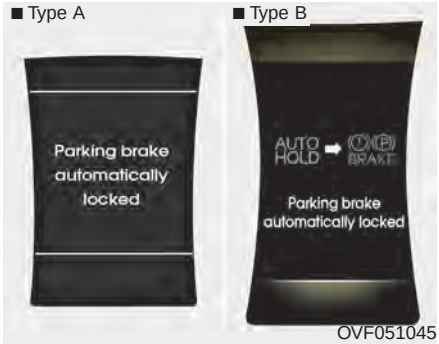

If the EPB is applied while Auto Hold is activated because of ESP(Electronic Stability Program) signal, a warning will sound and a message will appear.

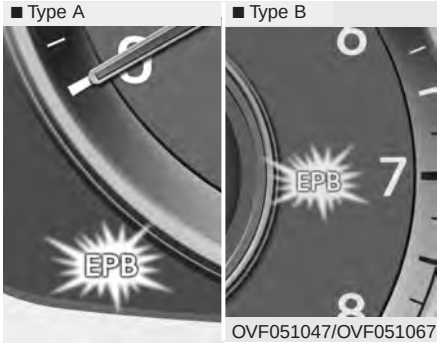

OVF051047/OVF051067

EPB malfunction indicator (if equipped)

This warning light illuminates if the engine start/stop button is changed to the ON position and goes off in approximately 3 seconds if the system is operation normally.

If the EPB malfunction indicator remains on, comes on while driving, or does not come on when the ignition switch or the engine start/stop button is changed to the ON position, this indicates that the EPB may have malfunctioned.

If this occurs, have your vehicle checked by an authorized HYUNDAI dealer as soon as possible.

The EPB malfunction indicator may illuminate when the ESP indicator comes on to indicate that the ESP is not working properly, but it does not indicate a malfunction of the EPB.

⚠ CAUTION

- ***The EPB warning light may illuminate if the EPB switch operates abnormally. Shut the engine off and turn it on again after a few minutes. The warning light will go off and the EPB switch will operate normally. However, if the EPB warning light is still on, have the system checked by an authorized HYUNDAI dealer.***
- ***If the parking brake warning light does not illuminate or blinks even though the EPB switch was pulled up, the EPB is not applied.***
- ***If the parking brake warning light blinks when the EPB warning light is on, press the switch, then pull it up. Once more press it back to its original position and pull it back up. If the EPB warning does not go off, have the system checked by an authorized HYUNDAI dealer.***

Emergency braking

If there is a problem with the brake pedal while driving, emergency braking is possible by pulling up and holding the EPB switch. Braking is possible only while you are holding the EPB switch.

⚠ WARNING

Do not operate the parking brake while the vehicle is moving except in an emergency situation.

✻ NOTICE

During emergency braking by the EPB, the parking brake warning light will illuminate to indicate that the system is operating.

⚠ CAUTION

If you continuously notice a noise or burning smell when the EPB is used for emergency braking, have your vehicle checked by an authorized HYUNDAI dealer.

When the EPB (electric parking brake) is not released

If the EPB does not release normally, take your vehicle to an authorized HYUNDAI dealer by towing the vehicle and have the system checked.

AUTO HOLD (if equipped)

The Auto Hold maintains the vehicle in a standstill even though the brake pedal is not depressed after the driver brings the vehicle to a complete stop by depressing the brake pedal.

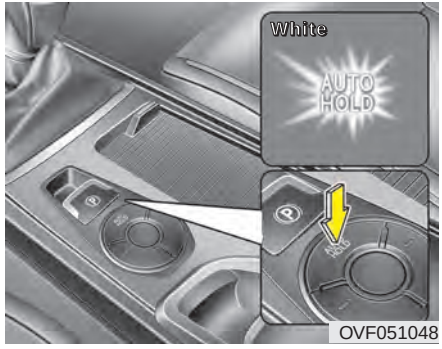

OVF051048

Set up

1. With the driver's door, engine hood and tailgate closed, fasten the driver's seat belt or depress the brake pedal and then press the Auto Hold button. The white AUTO HOLD indicator will come on and the system will be in the standby position.

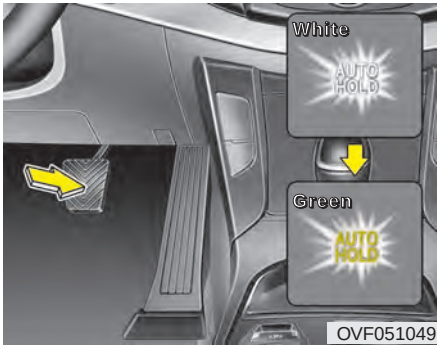

OVF051049

2. When you stop the vehicle completely by depressing the brake pedal, the AUTO HOLD indicator changes from white to green.
3. The vehicle will remain stationary even if you release the brake pedal.
4. If EPB is applied, Auto Hold will be released and the indicator will change to white.

Leaving

If you press the accelerator pedal with the shift lever in R (Reverse), D (Drive) or sports mode, the Auto Hold will be released automatically and the vehicle will start to move. The indicator changes from green to white.

⚠ WARNING

When driving off from Auto Hold by depressing the accelerator pedal, always check the surrounding area near your vehicle.

Slowly depress the accelerator pedal for a smooth launch.

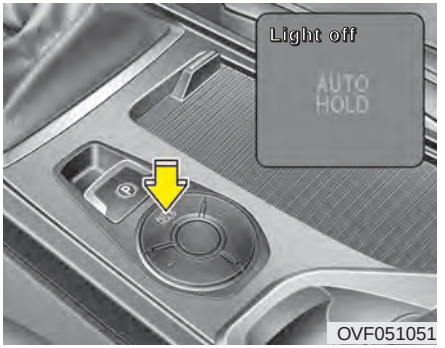

OVF051051

Cancel

To cancel the Auto Hold operation, press the Auto Hold switch. The AUTO HOLD indicator will go out.

To cancel the Auto Hold operation when the vehicle is at a standstill, press the Auto Hold switch while depressing the brake pedal.

✻ NOTICE

- The Auto Hold does not operate when:
  - The driver's seat belt is unfastened and driver's door is opened
  - The engine hood is opened
  - The tailgate is opened
  - The shift lever is in P (Park)
  - The EPB is applied
- For your safety, the Auto Hold automatically switches to EPB in such cases:
  - The driver's seat belt is unfastened and driver's door is opened
  - The engine hood is opened
  - The tailgate is opened
  - The vehicle is in a standstill for more than 10 minutes
  - The vehicle is standing on a steep slope
  - The vehicle moved several times

  In these cases, the brake warning light comes on, the AUTO HOLD indicator changes from green to white, and a warning sounds and a message will appear to inform you that EPB has been automatically engaged. Before driving off again, press foot brake pedal, check the surrounding area near your vehicle and release parking brake manually with the EPB switch.

(Continued)

(Continued)

- If the AUTO HOLD indicator lights up yellow, the Auto Hold is not working properly. Take your vehicle to an authorized HYUNDAI dealer and have the system checked.

⚠ WARNING

- **Press the accelerator pedal slowly when you start the vehicle.**
- **For your safety, cancel the Auto Hold when you drive downhill or back up the vehicle or park the vehicle.**

⚠ CAUTION

If there is a malfunction with the driver's door, engine hood or tailgate open detection system, the Auto Hold may not work properly.

Take your vehicle to an authorized HYUNDAI dealer and have the system checked.

Anti-lock brake system (ABS)

⚠ WARNING

ABS (or ESP) will not prevent accidents due to improper or dangerous driving maneuvers. Even though vehicle control is improved during emergency braking, always maintain a safe distance between you and objects ahead. Vehicle speeds should always be reduced during extreme road conditions.

The braking distance for vehicle equipped with an anti-lock braking system (or Electronic Stability Program System) may be longer than for those without it in the following road conditions.

During these conditions the vehicle should be driven at reduced speeds:

- **Rough, gravel or snow-covered roads.**
- **With tire chains installed.**
- **On roads where the road surface is pitted or has different surface height.**

(Continued)

(Continued)

The safety features of an ABS (or ESP) equipped vehicle should not be tested by high speed driving or cornering. This could endanger the safety of yourself or others.

The ABS continuously senses the speed of the wheels. If the wheels are going to lock, the ABS system repeatedly modulates the hydraulic brake pressure to the wheels.

When you apply your brakes under conditions which may lock the wheels, you may hear a “tik-tik” sound from the brakes, or feel a corresponding sensation in the brake pedal. This is normal and it means your ABS is active.

In order to obtain the maximum benefit from your ABS in an emergency situation, do not attempt to modulate your brake pressure and do not try to pump your brakes. Press your brake pedal as hard as possible or as hard as the situation warrants and allow the ABS to control the force being delivered to the brakes.

✻ NOTICE

A click sound may be heard in the engine compartment when the vehicle begins to move after the engine is started. These conditions are normal and indicate that the anti-lock brake system is functioning properly.

- Even with the anti-lock brake system, your vehicle still requires sufficient stopping distance. Always maintain a safe distance from the vehicle in front of you.
- Always slow down when cornering. The anti-lock brake system cannot prevent accidents resulting from excessive speeds.
- On loose or uneven road surfaces, operation of the anti-lock brake system may result in a longer stopping distance than for vehicles equipped with a conventional brake system.

W-78

⚠ CAUTION

- ***If the ABS warning light is on and stays on, you may have a problem with the ABS. In this case, however, your regular brakes will work normally.***
- ***The ABS warning light will stay on for approximately 3 seconds after the ignition switch is ON. During that time, the ABS will go through self-diagnosis and the light will go off if everything is normal. If the light stays on, you may have a problem with your ABS. Contact an authorized HYUNDAI dealer as soon as possible.***

⚠ CAUTION

- ***When you drive on a road having poor traction, such as an icy road, and operate your brakes continuously, the ABS will be active continuously and the ABS warning light may illuminate. Pull your vehicle over to a safe place and stop the engine.***
- ***Restart the engine. If the ABS warning light is off, then your ABS system is normal. Otherwise, you may have a problem with the ABS. Contact an authorized HYUNDAI dealer as soon as possible.***

✻ NOTICE

When you jump start your vehicle because of a drained battery, the engine may not run as smoothly and the ABS warning light may turn on at the same time. This happens because of the low battery voltage. It does not mean your ABS is malfunctioning.

- **Do not pump your brakes!**
- **Have the battery recharged before driving the vehicle.**

■ Type A

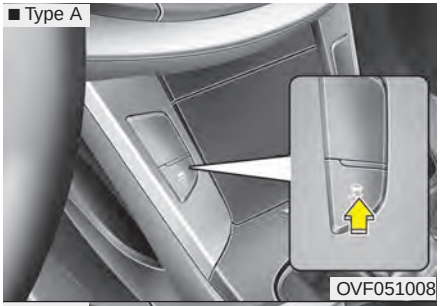

OVF051008

■ Type B

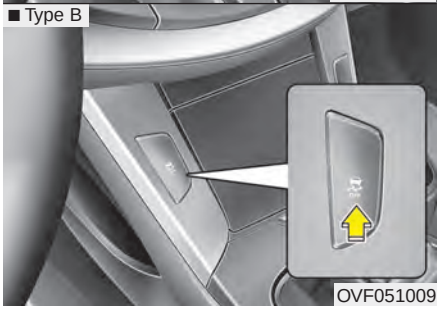

OVF051009

Electronic stability program (ESP)

The Electronic Stability Program (ESP) system is designed to stabilize the vehicle during cornering maneuvers. ESP checks where you are steering and where the vehicle is actually going. ESP applies the brakes at individual wheels and intervenes in the engine management system to stabilize the vehicle.

⚠ WARNING

Never drive too fast for the road conditions or too quickly when cornering. Electronic stability program (ESP) will not prevent accidents. Excessive speed in turns, abrupt maneuvers and hydroplaning on wet surfaces can still result in serious accidents. Only a safe and attentive driver can prevent accidents by avoiding maneuvers that cause the vehicle to lose traction. Even with ESP installed, always follow all the normal precautions for driving - including driving at safe speeds for the conditions.

The Electronic Stability Program (ESP) system is an electronic system designed to help the driver maintain vehicle control under adverse conditions. It is not a substitute for safe driving practices. Factors including speed, road conditions and driver steering input can all affect whether ESP will be effective in preventing a loss of control. It is still your responsibility to drive and corner at reasonable speeds and to leave a sufficient margin of safety.

When you apply your brakes under conditions which may lock the wheels, you may hear a “tik-tik” sound from the brakes, or feel a corresponding sensation in the brake pedal. This is normal and it means your ESP is active.

✻ NOTICE

A click sound may be heard in the engine compartment when the vehicle begins to move after the engine is started. These conditions are normal and indicate that the Electronic Stability Program (ESP) System is functioning properly.

ESP operation

ESP ON condition

-

- When the ignition is turned ON, ESP and ESP OFF indicator lights illuminate for approximately 3 seconds, then ESP is turned on.
- Press the ESP OFF button for at least half a second after turning the ignition ON to turn ESP off. (ESP OFF indicator will illuminate). To turn the ESP on, press the ESP OFF button (ESP OFF indicator light will go off).
- When starting the engine, you may hear a slight ticking sound. This is the ESP performing an automatic system self-check and does not indicate a problem.

When operating

When the ESP is in operation, ESP indicator light blinks.

- When the Electronic Stability Program is operating properly, you can feel a slight pulsation in the vehicle. This is only the effect of brake control and indicates nothing unusual.
- When moving out of the mud or slippery road, the engine rpm (revolution per minute) may not increase even if you press the accelerator pedal deeply. This is to maintain the stability and traction of the vehicle and does not indicate a problem.

ESP operation off

ESP OFF state

- To cancel ESP operation, press the ESP OFF button (ESP OFF indicator light illuminates).
- If the ignition switch is turned to LOCK position when ESP is off, ESP remains off. Upon restarting the engine, the ESP will automatically turn on again.

■ ESP indicator light

■ ESP OFF indicator light

Indicator light

When ignition switch is turned to ON, the indicator light illuminates, then goes off if the ESP system is operating normally.

The ESP indicator light blinks whenever ESP is operating or illuminates when ESP fails to operate.

ESP OFF indicator light comes on when the ESP is turned off with the button.

⚠ CAUTION

Driving with varying tire or wheel sizes may cause the ESP system to malfunction. When replacing tires, make sure they are the same size as your original tires.

⚠ WARNING

The Electronic Stability Program system is only a driving aid; use precautions for safe driving by slowing down on curved, snowy, or icy roads. Drive slowly and don't attempt to accelerate whenever the ESP indicator light is blinking, or when the road surface is slippery.

ESP OFF usage

When driving

- ESP should be turned on for daily driving whenever possible.
- To turn ESP off while driving, press the ESP OFF button while driving on a flat road surface.

⚠ WARNING

Never press the ESP OFF button while ESP is operating (ESP indicator light blinks).

If ESP is turned off while ESP is operating, the vehicle may slip out of control.

✻ NOTICE

- **When operating the vehicle on a dynamometer, ensure that the ESP is turned off (ESP OFF light illuminated). If the ESP is left on, it may prevent the vehicle speed from increasing, and result in false diagnosis.**
- **Turning the ESP off does not affect ABS or brake system operation.**

Vehicle stability management (VSM)

This system provides further enhancements to vehicle stability and steering responses when a vehicle is driving on a slippery road or a vehicle detected changes in coefficient of friction between right wheels and left wheels when braking.

VSM operation

When the VSM is operating:

- ESP (Electronic Stability Program) ( ) light will blink.
- The steering wheel may be controlled.

When the vehicle stability management is operating properly, you can feel a slight pulsation in the vehicle. This is only the effect of brake control and indicates nothing unusual.

The VSM does not operate when:

- Driving on bank road such as gradient or incline
- Driving rearward
- ESP OFF indicator light ( ) remains on the instrument cluster
- EPS (Electronic Power Steering) indicator light remains on the instrument cluster

VSM operation off

If you press the ESP OFF button to turn off the ESP, the VSM will also cancel and the ESP OFF indicator light ( ) illuminates.

To turn on the VSM, press the button again. The ESP OFF indicator light goes out.

Malfunction indicator

The VSM can be deactivated even if you don't cancel the VSM operation by pressing the ESP OFF button. It indicates that a malfunction has been detected somewhere in the EPS (Electronic Power Steering) system or VSM system. If the ESP indicator light ( ) or EPS warning light remains on, take your vehicle to an authorized HYUNDAI dealer and have the system checked.

✻ NOTICE

- **The VSM is designed to function above approximately 15 km/h (9 mph) on curves.**
- **The VSM is designed to function above approximately 30 km/h (18 mph) when a vehicle is braking on a split-mu road. The split-mu road is made of surfaces which have different friction forces.**

⚠ WARNING

- **The Vehicle Stability Management system is not a substitute for safe driving practices but a supplementary function only. It is the responsibility of the driver to always check the speed and the distance to the vehicle ahead. Always hold the steering wheel firmly while driving.**
- **Your vehicle is designed to activate according to the driver's intention, even with the VSM installed. Always follow all the normal precautions for driving at safe speeds for the conditions – including driving in inclement weather and on a slippery road.**
- **Driving with varying tire or wheel sizes may cause the VSM system to malfunction. When replacing tires, make sure they are the same size as your original tires.**

Hill-start assist control (HAC)

A vehicle has the tendency to slip back on a steep hill when it starts to go after stopping. The Hill-start Assist Control (HAC) prevents the vehicle from slipping back by operating the brakes automatically for about 2 seconds. The brakes are released when the accelerator pedal is depressed or after about 2 seconds.

⚠ WARNING

The HAC is activated only for about 2 seconds, so when the vehicle is starting off always depress the accelerator pedal.

✻ NOTICE

- **The HAC does not operate when the transaxle shift lever is in the P (Park) or N (Neutral) position.**
- **The HAC activates even though the ESP is off but it does not activate when the ESP has malfunctioned.**

Emergency Stop Signal (ESS) (if equipped)

The Emergency Stop Signal system alerts the driver behind by blinking the stop light when the vehicle is braked rapidly and severely.

The system is activated when:

- The vehicle suddenly stops (vehicle speed is over 55km/h and the vehicle deceleration at greater than 7 m/s^2)
- The ABS is activating

When the vehicle speed is under 40 km/h and the ABS deactivates or the sudden stop situation is over, the stop light will not blink. Instead, the hazard warning flasher will turn on automatically.

The hazard warning flasher will turn off when vehicle speed is over 10km/h after the vehicle has stopped. Also, it will turn off when the vehicle is driven at low speed for some time. You can turn it off manually by pushing the hazard warning flasher switch.

⚠ CAUTION

The Emergency Stop Signal (ESS) system will not work if the hazard warning flasher is already on.

Good braking practices

⚠ WARNING

- **Whenever you leave or park your vehicle, always set the parking brake as far as possible and fully engage the vehicle's transaxle into the P (Park) position. If the parking brake is not fully engaged, the vehicle may move inadvertently and injure yourself and others.**
- **All vehicles should always have the parking brake fully engaged when parking to avoid inadvertent movement of the vehicle which can injure occupants or pedestrians.**

- Check to be sure the parking brake is not engaged and that the parking brake indicator light is out before driving away.
- Driving through water may get the brakes wet. They can also get wet when the vehicle is washed. Wet brakes can be dangerous! Your vehicle will not stop as quickly if the brakes are wet. Wet brakes may cause the vehicle to pull to one side.

  To dry the brakes, apply the brakes lightly until the braking action returns to normal, taking care to keep the vehicle under control at all times. If the braking action does not return to normal, stop as soon as it is safe to do so and call an authorized HYUNDAI dealer for assistance.
- Do not coast down hills with the vehicle out of gear. This is extremely hazardous. Keep the vehicle in gear at all times, use the brakes to slow down, then shift to a lower gear so that engine braking will help you maintain a safe speed.
- Do not "ride" the brake pedal. Resting your foot on the brake pedal while driving can be dangerous because it can result in the brakes overheating and losing their effectiveness. It also increases the wear of the brake components.
- If a tire goes flat while you are driving, apply the brakes gently and keep the vehicle pointed straight ahead while you slow down. When you are moving slowly enough for it to be safe to do so, pull off the road and stop in a safe place.
- If your vehicle is equipped with an automatic transaxle, do not let your vehicle creep forward. To avoid creeping forward, keep your foot firmly on the brake pedal when the vehicle is stopped.
- Be cautious when parking on a hill. Firmly engage the parking brake and place the shift lever in P (automatic transaxle) or in first or reverse gear (manual transaxle). If your vehicle is facing downhill, turn the front wheels into the curb to help keep the vehicle from rolling. If your vehicle is facing uphill, turn the front wheels away from the curb to help keep the vehicle from rolling. If there is no curb or if it is required by other conditions to keep the vehicle from rolling, block the wheels.

- Under some conditions your parking brake can freeze in the engaged position. This is most likely to happen when there is an accumulation of snow or ice around or near the rear brakes or if the brakes are wet. If there is a risk that the parking brake may freeze, apply it only temporarily while you put the shift lever in P (automatic transaxle) or in first or reverse gear (manual transaxle) and block the rear wheels so the vehicle cannot roll. Then release the parking brake.
- Do not hold the vehicle on the upgrade with the accelerator pedal. This can cause the transaxle to overheat. Always use the brake pedal or parking brake.

CRUISE CONTROL SYSTEM (IF EQUIPPED)

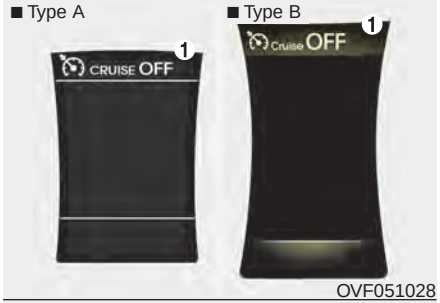

OVF051028

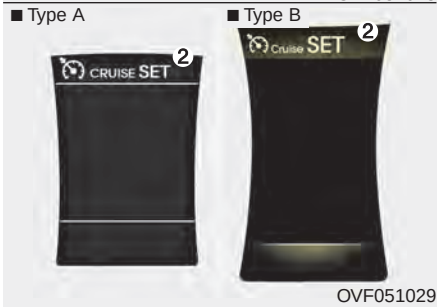

OVF051029

1. Cruise indicator
2. Cruise set indicator

The cruise control system allows you to program the vehicle to maintain a constant speed without pressing the accelerator pedal.

This system is designed to function above approximately 40 km/h (25 mph).

⚠ WARNING

- **If the cruise control is left on, (cruise indicator light is illuminated), the cruise control can be switched on accidentally. Keep the cruise control system off when the cruise control is not in use, to avoid inadvertently setting a speed.**
- **Use the cruise control system only when traveling on open highways in good weather.**
- **Do not use the cruise control when it may not be safe to keep the vehicle at a constant speed, for instance, driving in heavy or varying traffic, or on slippery (rainy, icy or snow-covered) or winding roads or over 6% up-hill or down-hill roads.**
- **Pay particular attention to the driving conditions whenever using the cruise control system.**
- **Be careful when driving downhill using the cruise control system, which may increase the vehicle speed.**

⚠ CAUTION

During cruise-speed driving of a manual transaxle vehicle, do not shift into neutral without depressing the clutch pedal, since the engine will be overrevved. If this happens, depress the clutch pedal or release the cruise control ON-OFF switch.

✻ NOTICE

During normal cruise control operation, when the SET switch is activated or reactivated after applying the brakes, the cruise control will energize after approximately 3 seconds. This delay is normal.

■ Type A

OVF051012

■ Type B

OVF051070

Cruise control switch

CANCEL: Cancels cruise control operation.

/ CRUISE : Turns cruise control system on or off.

RES+: Resumes or increases cruise control speed.

SET-: Sets or decreases cruise control speed.

■ Type A

OVF051013

■ Type B

OVF051020

To set cruise control speed:

1. Press the cruise /CRUISE button on the steering wheel, to turn the system on. The cruise indicator light will illuminate.
2. Accelerate to the desired speed, which must be more than 40 km/h (25 mph).

✻ NOTICE - Manual transaxle

For manual transaxle vehicles, you should depress the brake pedal at least once to set the cruise control after starting the engine.

■ Type A

OVF051015

■ Type B

OVF051022

3. Move the lever down (to SET-), and release it at the desired speed. The cruise set indicator light will illuminate. Release the accelerator pedal at the same time. The desired speed will automatically be maintained.

On a steep grade, the vehicle may slow down or speed up slightly while going downhill.

■ Type A

OVF051014

■ Type B

OVF051021

To increase cruise control set speed:

Follow either of these procedures:

- Move the lever up (to RES+) and hold it. Your vehicle will accelerate. Release the lever at the speed you want.
- Move the lever up (to RES+) and release it immediately. The cruising speed will increase by 2.0 km/h (1.2 mph) each time you move the lever up (to RES+) in this manner.

■ Type A

OVF051015

■ Type B

OVF051022

To decrease the cruising speed:

Follow either of these procedures:

- Move the lever down (to SET-) and hold it. Your vehicle will gradually slow down. Release the lever at the speed you want to maintain.
- Move the lever down (to SET-) and release it immediately. The cruising speed will decrease by 2.0 km/h (1.2 mph) each time you move the lever down (to SET-) in this manner.

To temporarily accelerate with the cruise control on:

If you want to speed up temporarily when the cruise control is on, depress the accelerator pedal. Increased speed will not interfere with cruise control operation or change the set speed.

To return to the set speed, take your foot off the accelerator pedal.

■ Type A

OVF051016

■ Type B

OVF051023

To cancel cruise control, do one of the following:

- Depress the brake pedal.
- Depress the clutch pedal if equpped with a manual transaxle.
- Shift into N (Neutral) if equpped with an automatic transaxle.
- Press the CANCEL switch located on the steering wheel.
- Decrease the vehicle speed lower than the memory speed by 20 km/h (12 mph).
- Decrease the vehicle speed to less than approximately 40 km/h (25 mph).

Each of these actions will cancel cruise control operation (the cruise set *indicator light will go off), but it will not turn the system off. If you wish to resume cruise control operation, move up the lever (to RES+) located on your steering wheel. You will return to your previously preset speed.*

■ Type A

OVF051014

■ Type B

OVF051021

To resume cruising speed at more than approximately 40 km/h (25 mph):

If any method other than the cruise /CRUISE button was used to cancel cruising speed and the system is still activated, the most recent set speed will automatically resume when you move the lever up (to RES+).

It will not resume, however, if the vehicle speed has dropped below approximately 40 km/h (25 mph).

To turn cruise control off, do one of the following:

- Press the cruise /CRUISE button (the cruise indicator light will illuminate).
- Turn the ignition off.

Both of these actions cancel cruise control operation. If you want to resume cruise control operation, repeat the steps provided in “To set cruise control speed” on the previous page.

SPEED LIMIT CONTROL SYSTEM (IF EQUIPPED)

You can set the speed limit when you do not want to drive over a specific speed.

If you drive over the preset speed limit, the warning system operates (set speed limit will blink and chime will sound) until the vehicle speed returns within the speed limit.

✻ NOTICE

While speed limit control is in operation, the cruise control system cannot be activated.

OVF051012

Speed limit control switch

CANCEL: Cancels set speed limit.

: Turns speed limit control system on or off.

RES+: Resumes or increases speed limit control speed.

SET-: Sets or decreases speed limit control speed.

OVF051017

To set speed limit :

1. Press the speed limit button on the steering wheel, to turn the system on.

OVF051024

The speed limit indicator light will illuminate.

OVF051018

2. Move the lever down (to SET-).
3. Move the lever up (to RES+) or down (to SET-), and release it at the desired speed. Move the lever up (to RES+) or down (to SET-) and hold it. The speed will increase or decrease by 5 km/h (3 mph).

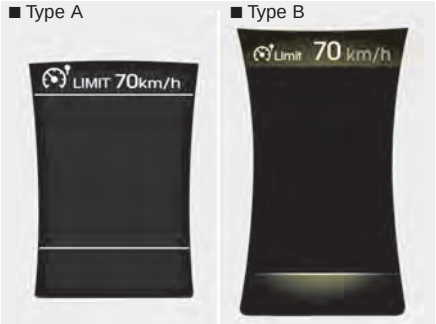

OVF051025

The set speed limit will be displayed.

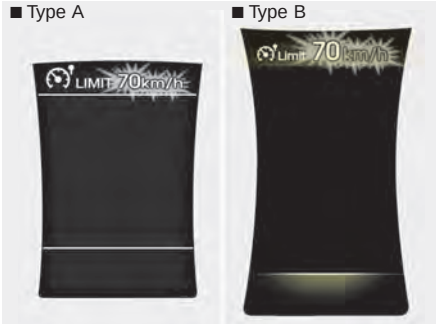

OVF051026

To drive over the preset speed limit you must depress hard on the accelerator pedal (more than approximately 80%) until the kick down mechanism works with a clicking noise. Then the set speed limit will blink and chime will sound until you return the vehicle speed within the speed limit.

✻ NOTICE

- **Depressing the accelerator pedal less than approximately 50%, the vehicle will not speed over the preset speed limit but maintain the vehicle speed within the speed limit.**
- **A clicking noise heard from the kick down mechanism by depressing the accelerator pedal fully is a normal condition.**

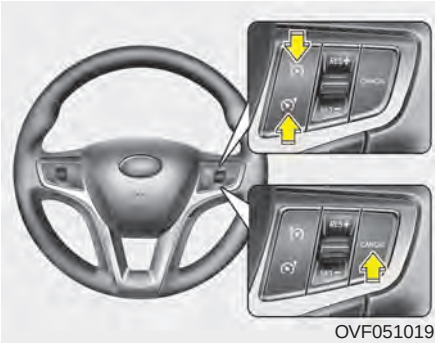

OVF051019

To turn off the speed limit control, do one of the following:

- Press the speed limit button once again.
- Press the cruise switch (If you press cruise switch, the cruise system will turn on)

If you press the CANCEL switch once, the set speed limit will cancel, but it will not turn the system off. If you wish to reset the speed limit, move the lever up (to RES+) or down (to SET-) to the desired speed.

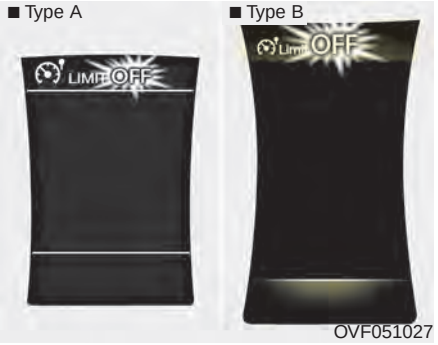

OVF051027

⚠ CAUTION

The "OFF" indicator will blink if there is a problem with speed limit control system.

If this occurs, have the system checked by an authorized HYUNDAI dealer as soon as possible.

LANE KEEPING ASSIST SYSTEM (LKAS) (IF EQUIPPED)

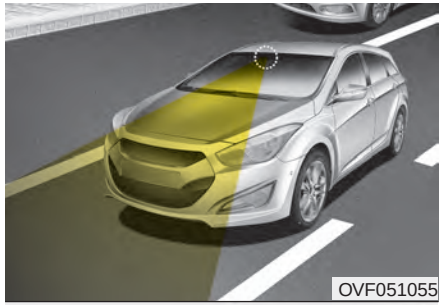

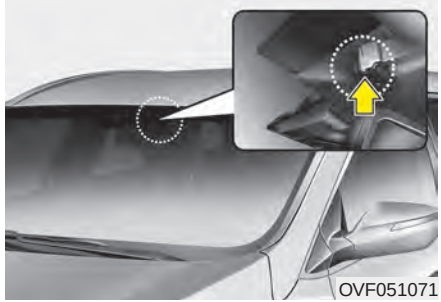

The Lane Keeping Assist System detects lane markers on the road, and assists the driver's steering to help keep the vehicle between lanes. When the system detects the vehicle straying from its lane, it alerts the driver with a visual and audible warning, while applying a slight counter-steering torque, trying to prevent the vehicle from moving out of its lane.

⚠ WARNING

- **The steering wheel is not continuously controlled so if the vehicle speed is very fast when leaving a lane the vehicle may not be controlled by the system.**
- **It is the responsibility of the driver to drive safely.**
- **Do not steer the steering wheel suddenly when the steering wheel is being assisted by the system.**
- **LKAS prevents the driver from moving out of the lane unintentionally by assisting the driver's steering. However, the driver should not solely rely on the system but always pay attention on the steering wheel to stay in the lane.**
- **Always check the road condition and surroundings and be cautious when the system cancels, does not operate or malfunctions.**
- **Do not place any accessories, stickers or tint the windshield near the rearview mirror.**

(Continued)

(Continued)

- **The system detects lane markers and controls the steering wheel by a camera, therefore, if the lane markers are hard to detect, the system may not work properly.**
  Please refer to "Driver's Attention".
- **Do not remove any LKAS parts or apply impact.**
- **Do not place objects on the dashboard that reflects light such as mirrors, white paper, etc. The system may malfunction if the sunlight is reflected.**
- **Loud audio sounds may interfere with the passenger from hearing warning chimes.**
- **Always have your hands on the steering wheel while the LKAS system is activated. If you continue to drive with your hands off the steering wheel after the "Hand on" warning, the system will turn off automatically.**
- **If you drive very fast, the vehicle may stray out of the lane. Always be cautious when using the system.**

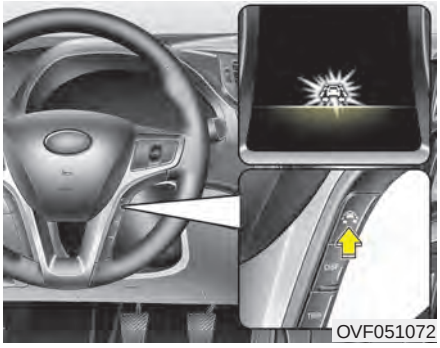
OVF051072

LKAS operation

- To turn on the LKAS, push the button with the ignition switch in the ON position.
- The LKAS indicator (green) will illuminate.
- To turn off the system, press the button again. The indicator turns off.

OVF051059

LKAS activation

- The LKAS screen will appear on the LCD display if the system is activated.
- When both lanes are detected and all the conditions to activate the LKAS are satisfied, the steering wheel will be controlled (green steering wheel indicator will illuminate).

⚠ WARNING

The Lane Keeping Assist System is a system to prevent the driver from leaving the lane. However, the driver should not solely rely on the system but always check the road conditions when driving.

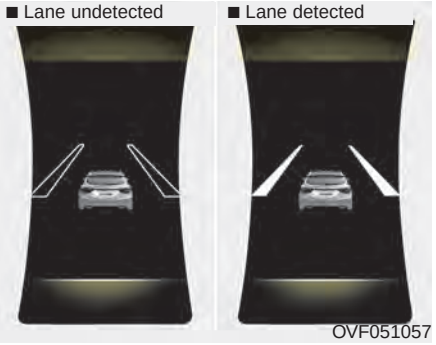

OVF051057

- If the system detects a lane, the color changes from black to white.

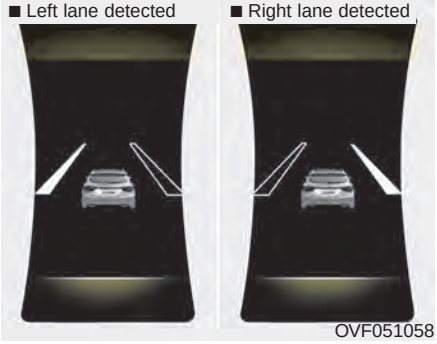

- If the system detects the left lane, the left lane color will change from black to white.
- If the system detects the right lane, the right lane color will change from black to white.
- Both lanes must be detected for the system to fully activate.
- If only one of the lane is detected, the system will warn (warning beep and blinking yellow lane) the driver when the driver crosses the detected lane.

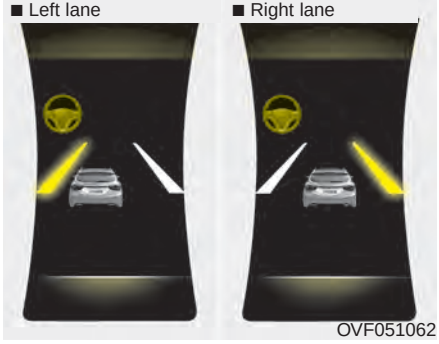

Warning

- If you cross a lane, the lane you cross will blink (yellow) on the LCD display with an audible warning.
- If the steering wheel appears, the system will control the vehicle's steering to prevent the vehicle from crossing the lane.

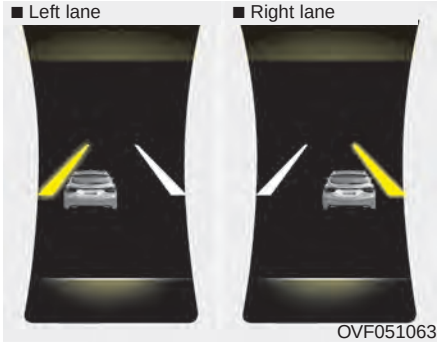

- If all the conditions to activate LKAS is not satisfied, the system will convert to LDWS and warn the driver only when the driver crosses the lane markers.

OVF051061

- If the driver takes one's hands off the steering wheel while the LKAS is activated, the system will warn the driver after several seconds with a visual and audible warning.

⚠ WARNING

The warning message may appear late according to road conditions. Therefore, always have your hands on the steering wheel while driving.

OVF051066

- If the driver still does not have one's hand on the steering wheel after several seconds, the system will be automatically cancelled.

⚠ WARNING

- **The driver is responsible for accurate steering.**
- **Turn off the system and drive the vehicle personally in below situations.**
  - **In bad weather**
  - **In bad road condition**
  - **When the steering wheel needs to be controlled by the driver frequently.**

✻ NOTICE

- **Even though the steering is assisted by the system, the driver may control the steering.**
- **The steering wheel may feel heavier when the steering wheel is assisted by the system than when it is not.**

OVF051065

A message will appear on the LCD display if the condition to activate the LKAS is not satisfied. Also, an audible warning will be heard. The warning will disappear when the conditions are met.

The system will be cancelled when:

- Vehicle speed is below 60 km/h (37.3 mph) and over 150 km/h (93.2 mph).
- Only one lane is detected.
- Always turn on the turn signal to change lanes. If you change lanes without the turn signal on, the steering wheel might be controlled.
- The hazard warning light is on.
- The width of the lane is below 2.7 m and over 4.5 m.
- ESP(Electronic Stability Program) and VSM(Vehicle stability management) are activated.
- When the system is on or after changing a lane, drive in the middle of the lane. If not, the system will not provide the steering assist function.
- The steering will not be assisted when you drive fast on a sharp curve.
- The steering will not be assisted when you change lanes fast.
- The steering will not be assisted when you brake suddenly.

DRIVER'S ATTENTION

The driver must be cautious in the below situations for the system may not assist the driver and may not work properly.

- **The lane is not visible due to snow, rain, stain, a puddle or many other things.**
- **The brightness of the outside changes suddenly such as passing through a tunnel.**
- **Not turning on the headlight or the light is weak even at night or in a tunnel.**
- **Difficult to distinguish the color of the lane maker from the road.**
- **Driving on a steep grade or a curve.**
- **Light reflects from the water on the road such as sunlight, streetlight or the light of oncoming vehicles.**
- **The lens or windshield is stained with foreign matter.**
- **The sensor cannot detect the lane because of fog, heavy rain or heavy snow.**
- **The surrounding of the inside rear view mirror temperature is high due to direct light.**
- **The lane is very wide or narrow.**
- **The lane marker is damaged or indistinct.**

- **The shadow is on the lane marker by a median strip.**
- **There is a mark similar to a lane marker.**
- **There is a boundary structure.**
- **The distance from vehicle ahead is very short or the vehicle ahead drives hiding the lane marker.**
- **The vehicle shakes heavily.**
- **The lane number increases or decreases or the lane marker are crossing complicatedly.**
- **Placing something on the dashboard.**
- **Driving with the sun in front of you.**
- **Driving in areas under construction.**
- **The lane marker is more than two.**
- **The lane marker in a tunnel is hard to distinguish due to dust or grease.**
- **The lane marker is hard to distinguish after raining at night.**
- **The lane marker is hard to distinguish due to dust.**

OVF051064

LKAS malfunction

- If there is a problem with the system a message will appear for 2 seconds with an audible warning. If the problem continues the LKAS fail indicator will illuminate.

OVF051056

LKAS fail indicator

The LKAS fail indicator (yellow) will illuminate with an audible warning if the LKAS is not working properly. Take your vehicle to an authorized HYUNDAI dealer and have the system checked.

When there is a problem with the system do one of the following:

- Turn the system on after turning the engine off and on again.
- Check if the ignition switch is in the ON position.
- Check if the system is affected by the weather. (ex: fog, heavy rain, etc.)
- Check if there is foreign matter on the camera lens

If the problem is not solved, have the vehicle checked by an authorized HYUNDAI dealer.

Lane Departure Warning System (LDWS)

- The system can be converted to LKA to LDW at the “User setting” mode. Refer to “User setting” in section 4.
- LDWS alerts the driver with a visual and audible warning when the system detects the vehicle straying from its lane.
- If the LDWS is operating the indicator (white) will illuminate.
- The steering wheel will not be controlled.

ECONOMICAL OPERATION

Your vehicle's fuel economy depends mainly on your style of driving, where you drive and when you drive.

Each of these factors affects how many kilometers (miles) you can get from a liter (gallon) of fuel. To operate your vehicle as economically as possible, use the following driving suggestions to help save money in both fuel and repairs:

- Drive smoothly. Accelerate at a moderate rate. Do not make "jack-rabbit" starts or full-throttle shifts and maintain a steady cruising speed. Do not race between stoplights. Try to adjust your speed to the traffic so you do not have to change speeds unnecessarily. Avoid heavy traffic whenever possible. Always maintain a safe distance from other vehicles so you can avoid unnecessary braking. This also reduces brake wear.
- Drive at a moderate speed. The faster you drive, the more fuel your vehicle uses. Driving at a moderate speed, especially on the highway, is one of the most effective ways to reduce fuel consumption.
- Do not "ride" the brake or clutch pedal. This can increase fuel consumption and also increase wear on these components. In addition, driving with your foot resting on the brake pedal may cause the brakes to overheat, which reduces their effectiveness and may lead to more serious consequences.
- Take care of your tires. Keep them inflated to the recommended pressure. Incorrect inflation, either too much or too little, results in unnecessary tire wear. Check the tire pressures at least once a month.
- Be sure that the wheels are aligned correctly. Improper alignment can result from hitting curbs or driving too fast over irregular surfaces. Poor alignment causes faster tire wear and may also result in other problems as well as greater fuel consumption.
- Keep your vehicle in good condition. For better fuel economy and reduced maintenance costs, maintain your vehicle in accordance with the maintenance schedule in section 7. If you drive your vehicle in severe conditions, more frequent maintenance is required (see section 7 for details).
- Keep your vehicle clean. For maximum service, your vehicle should be kept clean and free of corrosive materials. It is especially important that mud, dirt, ice, etc. not be allowed to accumulate on the underside of the vehicle. This extra weight can result in increased fuel consumption and also contribute to corrosion.
- Travel lightly. Do not carry unnecessary weight in your vehicle. Weight reduces fuel economy.
- Do not let the engine idle longer than necessary. If you are waiting (and not in traffic), turn off your engine and restart only when you're ready to go.

- Remember, your vehicle does not require extended warm-up. After the engine has started, allow the engine to run for 10 to 20 seconds prior to placing the vehicle in gear. In very cold weather, however, give your engine a slightly longer warm-up period.
- Do not "lug" or "over-rev" the engine. Lugging is driving too slowly in too high a gear resulting engine bucking. If this happens, shift to a lower gear. Over-revving is racing the engine beyond its safe limit. This can be avoided by shifting at the recommended speeds.
- Use your air conditioning sparingly. The air conditioning system is operated by engine power so your fuel economy is reduced when you use it.
- Open windows at high speeds can reduce fuel economy.
- Fuel economy is less in crosswinds and headwinds. To help offset some of this loss, slow down when driving in these conditions.

Keeping a vehicle in good operating condition is important both for economy and safety. Therefore, have an authorized HYUNDAI dealer perform scheduled inspections and maintenance.

⚠ WARNING - Engine off during motion

Never turn the engine off to coast down hills or anytime the vehicle is in motion. The power steering and power brakes will not function properly without the engine running. Instead, keep the engine on and downshift to an appropriate gear for engine braking effect. In addition, turning off the ignition while driving could engage the steering wheel lock (if equipped) resulting in loss of vehicle steering which could cause serious injury or death.

SPECIAL DRIVING CONDITIONS

Hazardous driving conditions

When hazardous driving conditions are encountered such as water, snow, ice, mud, sand, or similar hazards, follow these suggestions:

- Drive cautiously and allow extra distance for braking.
- Avoid sudden braking or steering.
- When braking with non-ABS brakes pump the brake pedal with a light up-and-down motion until the vehicle is stopped.

⚠ WARNING - ABS

Do not pump the brake pedal on a vehicle equipped with ABS.

- If stalled in snow, mud, or sand, use second gear. Accelerate slowly to avoid spinning the drive wheels.
- Use sand, rock salt, tire chains, or other non-slip material under the drive wheels to provide traction when stalled in ice, snow, or mud.

⚠ WARNING - Downshifting

Downshifting with an automatic transaxle, while driving on slippery surfaces can cause an accident. The sudden change in tire speed could cause the tires to skid. Be careful when downshifting on slippery surfaces.

Reducing the risk of a rollover

This multi-purpose passenger vehicle is defined as a Multi Purpose Vehicle (MPV). MPV's have higher ground clearance and a narrower track to make them capable of performing in a wide variety of road applications. Specific design characteristics give them a higher center of gravity than ordinary vehicles. An advantage of the higher ground clearance is a better view of the road, which allows you to anticipate problems. They are not designed for cornering at the same speeds as conventional passenger vehicles. Due to this risk, driver and passengers are strongly recommended to buckle their seat belts. In a rollover crash, an unbelted person is more likely to die than a person wearing a seat belt. There are steps that a driver can make to reduce the risk of a rollover. If at all possible, avoid sharp turns or abrupt maneuvers, do not load your roof rack with heavy cargo, and never modify your vehicle in any way.

⚠ WARNING - Rollover

As with other Multi Purpose Vehicle (MPV), failure to operate this vehicle correctly may result in loss of control, an accident or vehicle rollover.

- **Utility vehicles have a significantly higher rollover rate than other types of vehicles.**
- **Specific design characteristics (higher ground clearance, narrower track, etc.) give this vehicle a higher center of gravity than ordinary vehicles.**
- **A MPV is not designed for cornering at the same speeds as conventional vehicles.**
- **Avoid sharp turns or abrupt maneuvers.**
- **In a rollover crash, an unbelted person is significantly more likely to die than a person wearing a seat belt. Make sure everyone in the vehicle is properly buckled up.**

⚠ WARNING

Your vehicle is equipped with tires designed to provide safe ride and handling capability. Do not use a size and type of tire and wheel that is different from the one that is originally installed on your vehicle. It can affect the safety and performance of your vehicle, which could lead to steering failure or rollover and serious injury. When replacing the tires, be sure to equip all four tires with the tire and wheel of the same size, type, tread, brand and load-carrying capacity. If you nevertheless decide to equip your vehicle with any tire/wheel combination not recommended by HYUNDAI for off road driving, you should not use these tires for highway driving.

Rocking the vehicle

If it is necessary to rock the vehicle to free it from snow, sand, or mud, first turn the steering wheel right and left to clear the area around your front wheels. Then, shift back and forth between 1st (First) and R (Reverse) in vehicles equipped with a manual transaxle or R (Reverse) and any forward gear in vehicles equipped with an automatic transaxle. Do not race the engine, and spin the wheels as little as possible. If you are still stuck after a few tries, have the vehicle pulled out by a tow vehicle to avoid engine overheating and possible damage to the transaxle.

⚠ CAUTION

Prolonged rocking may cause engine over-heating, transaxle damage or failure, and tire damage.

⚠ WARNING - Spinning tires

Do not spin the wheels, especially at speeds more than 56 km/h (35 mph). Spinning the wheels at high speeds when the vehicle is stationary could cause a tire to overheat which could result in tire damage that may injure bystanders.

✻ NOTICE

The ESP system should be turned OFF prior to rocking the vehicle.

⚠ WARNING

If your vehicle becomes stuck in snow, mud, sand, etc., then you may attempt to rock the vehicle free by moving it forward and backward. Do not attempt this procedure if people or objects are anywhere near the vehicle. During the rocking operation the vehicle may suddenly move forward or backward as it becomes unstuck, causing injury or damage to nearby people or objects.

Smooth cornering

Avoid braking or gear changing in corners, especially when roads are wet. Ideally, corners should always be taken under gentle acceleration. If you follow these suggestions, tire wear will be held to a minimum.

Driving at night

Because night driving presents more hazards than driving in the daylight, here are some important tips to remember:

- Slow down and keep more distance between you and other vehicles, as it may be more difficult to see at night, especially in areas where there may not be any street lights.
- Adjust your mirrors to reduce the glare from other driver's headlights.
- Keep your headlights clean and properly aimed on vehicles not equipped with the automatic headlight aiming feature. Dirty or improperly aimed headlights will make it much more difficult to see at night.
- Avoid staring directly at the headlights of oncoming vehicles. You could be temporarily blinded, and it will take several seconds for your eyes to readjust to the darkness.

Driving in the rain

Rain and wet roads can make driving dangerous, especially if you're not prepared for the slick pavement. Here are a few things to consider when driving in the rain:

- A heavy rainfall will make it harder to see and will increase the distance needed to stop your vehicle, so slow down.
- Keep your windshield wiping equipment in good shape. Replace your windshield wiper blades when they show signs of streaking or missing areas on the windshield.
- If your tires are not in good condition, making a quick stop on wet pavement can cause a skid and possibly lead to an accident. Be sure your tires are in good shape.
- Turn on your headlights to make it easier for others to see you.
- Driving too fast through large puddles can affect your brakes. If you must go through puddles, try to drive through them slowly.
- If you believe you may have gotten your brakes wet, apply them lightly while driving until normal braking operation returns.

Driving in flooded areas

Avoid driving through flooded areas unless you are sure the water is no higher than the bottom of the wheel hub. Drive through any water slowly. Allow adequate stopping distance because brake performance may be affected.

After driving through water, dry the brakes by gently applying them several times while the vehicle is moving slowly.

Highway driving

Tires

Adjust the tire inflation pressures to specification. Low tire inflation pressures will result in overheating and possible failure of the tires.

Avoid using worn or damaged tires which may result in reduced traction or tire failure.

✻ NOTICE

Never exceed the maximum tire inflation pressure shown on the tires.

⚠ WARNING

- **Underinflated or overinflated tires can cause poor handling, loss of vehicle control, and sudden tire failure leading to accidents, injuries, and even death. Always check the tires for proper inflation before driving. For proper tire pressures, refer to section 8, “Tires and wheels”.**
- **Driving on tires with no or insufficient tread is dangerous. Worn-out tires can result in loss of vehicle control, collisions, injury, and even death. Worn-out tires should be replaced as soon as possible and should never be used for driving. Always check the tire tread before driving your vehicle. For further information and tread limits, refer to section 7, “Tires and wheels”.**

Fuel, engine coolant and engine oil

High speed travel consumes more fuel than urban motoring. Do not forget to check both engine coolant and engine oil.

Drive belt

A loose or damaged drive belt may result in overheating of the engine.

WINTER DRIVING

Severe weather conditions in the winter result in greater wear and other problems. To minimize the problems of winter driving, you should follow these suggestions:

Snowy or Icy conditions

To drive your vehicle in deep snow, it may be necessary to use snow tires or to install tire chains on your tires. If snow tires are needed, it is necessary to select tires equivalent in size and type of the original equipment tires. Failure to do so may adversely affect the safety and handling of your vehicle. Furthermore, speeding, rapid acceleration, sudden brake applications, and sharp turns are potentially very hazardous practices.
During deceleration, use engine braking to the fullest extent. Sudden brake applications on snowy or icy roads may cause skids to occur. You need to keep sufficient distance between the vehicle in operation in front and your vehicle. Also, apply the brake gently. It should be noted that installing tire chains on the tire will provide a greater driving force, but will not prevent side skids.

✻ NOTICE

Tire chains are not legal in all countries. Check the country laws before fitting tire chains.

Snow tires

If you mount snow tires on your vehicle, make sure they are radial tires of the same size and load range as the original tires. Mount snow tires on all four wheels to balance your vehicle's handling in all weather conditions. Keep in mind that the traction provided by snow tires on dry roads may not be as high as your vehicle's original equipment tires. You should drive cautiously even when the roads are clear. Check with the tire dealer for maximum speed recommendations.

⚠ WARNING - Snow tire size

Snow tires should be equivalent in size and type to the vehicle's standard tires. Otherwise, the safety and handling of your vehicle may be adversely affected.

Do not install studded tires without first checking local, state and municipal regulations for possible restrictions against their use.

Tire chains

Since the sidewalls of radial tires are thinner, they can be damaged by mounting some types of snow chains on them. Therefore, the use of snow tires is recommended instead of snow chains. Do not mount tire chains on vehicles equipped with aluminum wheels; snow chains may cause damage to the wheels. If snow chains must be used, use wire-type chains with a thickness of less than 12 mm (0.47 in). Damage to your vehicle caused by improper snow chain use is not covered by your vehicle manufacturers warranty.

Install tire chains only on the front tires.

⚠ CAUTION

- ***Make sure the snow chains are the correct size and type for your tires. Incorrect snow chains can cause damage to the vehicle body and suspension and may not be covered by your vehicle manufacturer warranty. Also, the snow chain connecting hooks may be damaged from contacting vehicle components causing the snow chains to come loose from the tire. Make sure the snow chains are SAE class "S" certified.***
- ***Always check chain installation for proper mounting after driving approximately 0.5 to 1 km (0.3 to 0.6 miles) to ensure safe mounting. Retighten or remount the chains if they are loose.***

Chain installation

When installing chains, follow the manufacturer's instructions and mount them as tightly as you can. Drive slowly with chains installed. If you hear the chains contacting the body or chassis, stop and tighten them. If they still make contact, slow down until it stops. Remove the chains as soon as you begin driving on cleared roads.

⚠ WARNING
- Mounting chains

When mounting snow chains, park the vehicle on level ground away from traffic. Turn on the vehicle Hazard Warning flashers and place a triangular emergency warning device behind the vehicle if available. Always place the vehicle in P (Park), apply the parking brake and turn off the engine before installing snow chains.

⚠ WARNING - Tire chains

- **The use of chains may adversely affect vehicle handling.**
- **Do not exceed 30 km/h (20 mph) or the chain manufacturer's recommended speed limit, whichever is lower.**
- **Drive carefully and avoid bumps, holes, sharp turns, and other road hazards, which may cause the vehicle to bounce.**
- **Avoid sharp turns or locked-wheel braking.**

⚠ CAUTION

- ***Chains that are the wrong size or improperly installed can damage your vehicle's brake lines, suspension, body and wheels.***
- ***Stop driving and retighten the chains any time you hear them hitting the vehicle.***

Use high quality ethylene glycol coolant

Your vehicle is delivered with high quality ethylene glycol coolant in the cooling system. It is the only type of coolant that should be used because it helps prevent corrosion in the cooling system, lubricates the water pump and prevents freezing. Be sure to replace or replenish your coolant in accordance with the maintenance schedule in section 7. Before winter, have your coolant tested to assure that its freezing point is sufficient for the temperatures anticipated during the winter.

Check battery and cables

Winter puts additional burdens on the battery system. Visually inspect the battery and cables as described in section 7. The level of charge in your battery can be checked by an authorized HYUNDAI dealer or a service station.

Change to "winter weight" oil if necessary

In some climates it is recommended that a lower viscosity "winter weight" oil be used during cold weather. See section 8 for recommendations. If you aren't sure what weight oil you should use, consult an authorized HYUNDAI dealer.

Check spark plugs and ignition system

Inspect your spark plugs as described in section 7 and replace them if necessary. Also check all ignition wiring and components to be sure they are not cracked, worn or damaged in any way.

To keep locks from freezing

To keep the locks from freezing, squirt an approved de-icer fluid or glycerine into the key opening. If a lock is covered with ice, squirt it with an approved de-icing fluid to remove the ice. If the lock is frozen internally, you may be able to thaw it out by using a heated key. Handle the heated key with care to avoid injury.

Use approved window washer anti-freeze in system

To keep the water in the window washer system from freezing, add an approved window washer anti-freeze solution in accordance with instructions on the container. Window washer anti-freeze is available from an authorized HYUNDAI dealer and most auto parts outlets. Do not use engine coolant or other types of anti-freeze as these may damage the paint finish.

Don't let your parking brake freeze

Under some conditions your parking brake can freeze in the engaged position. This is most likely to happen when there is an accumulation of snow or ice around or near the rear brakes or if the brakes are wet. If there is a risk the parking brake may freeze, apply it only temporarily while you put the shift lever in P (automatic transaxle) or in first or reverse gear (manual transaxle) and block the rear wheels so the vehicle cannot roll. Then release the parking brake.

Don't let ice and snow accumulate underneath

Under some conditions, snow and ice can build up under the fenders and interfere with the steering. When driving in severe winter conditions where this may happen, you should periodically check underneath the vehicle to be sure the movement of the front wheels and the steering components is not obstructed.

Carry emergency equipment

Depending on the severity of the weather, you should carry appropriate emergency equipment. Some of the items you may want to carry include tire chains, tow straps or chains, flashlight, emergency flares, sand, shovel, jumper cables, window scraper, gloves, ground cloth, coveralls, blanket, etc.

TRAILER TOWING

If you are considering towing with your vehicle, you should first check with your country's Department of Motor Vehicles to determine their legal requirements.

Since laws vary the requirements for towing trailers, cars, or other types of vehicles or apparatus may differ. Ask an authorized HYUNDAI dealer for further details before towing.

⚠ WARNING - Towing a trailer

If you don't use the correct equipment and/or drive improperly, you can lose control when you pull a trailer. For example, if the trailer is too heavy, the brakes may not work well - or even at all. You and your passengers could be seriously or fatally injured. Pull a trailer only if you have followed all the steps in this section.

⚠ WARNING - Weight limits

Before towing, make sure the total trailer weight, GCW (gross combination weight), GVW (gross vehicle weight), GAW (gross axle weight) and trailer tongue load are all within the limits.

✻ NOTICE - For Europe

- **The technically permissible maximum load on the rear axle(s) may be exceeded by not more than 15 % and the technically permissible maximum laden mass of the vehicle may be exceeded by not more than 10 % or 100 kg (220.4 lbs), whichever value is lower. In this case, do not exceed 100 km/h (62.1 mph) for vehicle of category M1 or 80 km/h (49.7 mph) for vehicle of category N1.**
- **When a vehicle of category M1 is towing a trailer, the additional load imposed at the trailer coupling device may cause the tire maximum load ratings to be exceeded, but not by more than 15 %. In this case, do not exceed 100 km/h (62.1 mph) and increase the tire inflation pressure by at least 0.2 bar.**

⚠ CAUTION

Pulling a trailer improperly can damage your vehicle and result in costly repairs not covered by your warranty. To pull a trailer correctly, follow the advice in this section.

Your vehicle can tow a trailer. To identify what the vehicle trailering capacity is for your vehicle, you should read the information in “Weight of the trailer” that appears later in this section.

Remember that trailering is different than just driving your vehicle by itself. Trailering means changes in handling, durability, and fuel economy. Successful, safe trailering requires correct equipment, and it has to be used properly.

This section contains many time-tested, important trailering tips and safety rules. Many of these are important for your safety and that of your passengers. Please read this section carefully before you pull a trailer.

Load-pulling components such as the engine, transaxle, wheel assemblies, and tires are forced to work harder against the load of the added weight. The engine is required to operate at relatively higher speeds and under greater loads. This additional burden generates extra heat. The trailer also considerably adds wind resistance, increasing the pulling requirements.

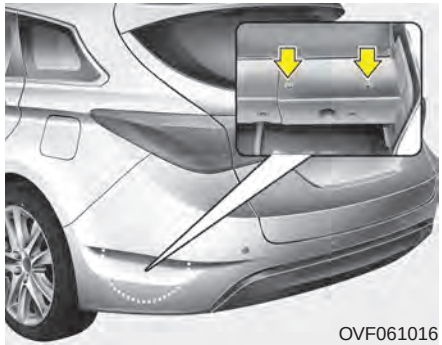
OVF061016

✻ NOTICE - Location of trailer mounting

The mounting hole for hitches are located on both sides of the underbody behind the rear tires.

Hitches

It's important to have the correct hitch equipment. Crosswinds, large trucks going by, and rough roads are a few reasons why you'll need the right hitch. Here are some rules to follow:

- Do you have to make any holes in the body of your vehicle when you install a trailer hitch? If you do, then be sure to seal the holes later when you remove the hitch.

  If you do not seal them, deadly carbon monoxide (CO) from your exhaust can get into your vehicle, as well as dirt and water.
- The bumpers on your vehicle are not intended for hitches. Do not attach rental hitches or other bumper-type hitches to them. Use only a frame-mounted hitch that does not attach to the bumper.
- A HYUNDAI accessory trailer hitch is available at an authorized HYUNDAI dealer.

Safety chains

You should always attach chains between your vehicle and your trailer. Cross the safety chains under the tongue of the trailer so that the tongue will not drop to the road if it becomes separated from the hitch.

Instructions about safety chains may be provided by the hitch manufacturer or by the trailer manufacturer. Follow the manufacturer's recommendation for attaching safety chains. Always leave just enough slack so you can turn with your trailer. And, never allow safety chains to drag on the ground.

Trailer brakes

If your trailer is equipped with a braking system, make sure it conforms to your country's regulations and that it is properly installed and operating correctly.

If your trailer weight exceeds the maximum allowed weight without trailer brakes, then the trailer will also require its own brakes as well. Be sure to read and follow the instructions for the trailer brakes so you'll be able to install, adjust and maintain them properly.

- Do not tap into or modify your vehicle's brake system.

⚠ WARNING - Trailer brakes

Do not use a trailer with its own brakes unless you are absolutely certain that you have properly set up the brake system. This is not a task for amateurs. Use an experienced, competent trailer shop for this work.

Driving with a trailer

Towing a trailer requires a certain amount of experience. Before setting out for the open road, you must get to know your trailer. Acquaint yourself with the feel of handling and braking with the added weight of the trailer. And always keep in mind that the vehicle you are driving is now a good deal longer and not nearly so responsive as your vehicle is by itself.

Before you start, check the trailer hitch and platform, safety chains, electrical connector(s), lights, tires and mirror adjustment. If the trailer has electric brakes, start your vehicle and trailer moving and then apply the trailer brake controller by hand to be sure the brakes are working. This lets you check your electrical connection at the same time.

During your trip, check occasionally to be sure that the load is secure, and that the lights and any trailer brakes are still working.

Following distance

Stay at least twice as far behind the vehicle ahead as you would when driving your vehicle without a trailer. This can help you avoid situations that require heavy braking and sudden turns.

Passing

You'll need more passing distance up ahead when you're towing a trailer. And, because of the increased vehicle length, you'll need to go much farther beyond the passed vehicle before you can return to your lane.

Backing up

Hold the bottom of the steering wheel with one hand. Then, to move the trailer to the left, just move your hand to the left. To move the trailer to the right, move your hand to the right. Always back up slowly and, if possible, have someone guide you.

Making turns

When you're turning with a trailer, make wider turns than normal. Do this so your trailer won't strike soft shoulders, curbs, road signs, trees, or other objects. Avoid jerky or sudden maneuvers. Signal well in advance.

Turn signals when towing a trailer

When you tow a trailer, your vehicle has to have a different turn signal flasher and extra wiring. The green arrows on your instrument panel will flash whenever you signal a turn or lane change. Properly connected, the trailer lights will also flash to alert other drivers you're about to turn, change lanes, or stop.

When towing a trailer, the green arrows on your instrument panel will flash for turns even if the bulbs on the trailer are burned out. Thus, you may think drivers behind you are seeing your signals when, in fact, they are not. It is important to check occasionally to be sure the trailer bulbs are still working. You must also check the lights every time you disconnect and then reconnect the wires.

Do not connect a trailer lighting system directly to your vehicle's lighting system. Use only an approved trailer wiring harness.

An authorized HYUNDAI dealer can assist you in installing the wiring harness.

⚠ WARNING

Failure to use an approved trailer wiring harness could result in damage to the vehicle electrical system and/or personal injury.

Driving on grades

Reduce speed and shift to a lower gear before you start down a long or steep downgrade. If you don't shift down, you might have to use your brakes so much that they would get hot and no longer operate efficiently.

On a long uphill grade, shift down and reduce your speed to around 70 km/h (45 mph) to reduce the possibility of engine and transaxle overheating.

If your trailer weighs more than the maximum trailer weight without trailer brakes and you have an automatic transaxle, you should drive in D (Drive) when towing a trailer.

Operating your vehicle in D (Drive) when towing a trailer will minimize heat build up and extend the life of your transaxle.

⚠ CAUTION

- ***When towing a trailer on steep grades (in excess of 6%) pay close attention to the engine coolant temperature gauge to ensure the engine does not overheat.***

  If the needle of the coolant temperature gauge moves across the dial towards "130/H (HOT)", pull over and stop as soon as it is safe to do so, and allow the engine to idle until it cools down. You may proceed once the engine has cooled sufficiently.
- ***You must decide driving speed depending on trailer weight and uphill grade to reduce the possibility of engine and transaxle overheating.***

Parking on hills

Generally, if you have a trailer attached to your vehicle, you should not park your vehicle on a hill. People can be seriously or fatally injured, and both your vehicle and the trailer can be damaged if unexpectedly roll down hill.

⚠ WARNING - Parking on a hill

Parking your vehicle on a hill with a trailer attached could cause serious injury or death, should the trailer break loose.

However, if you ever have to park your trailer on a hill, here is how to do it:

1. Pull the vehicle into the parking space. Turn the steering wheel in the direction of the curb (right if headed down hill, left if headed up hill).
2. If the vehicle has a manual transaxle, place the car in neutral. If the vehicle has an automatic transaxle, place the car in P (Park).
3. Set the parking brake and shut off the vehicle.
4. Place chocks under the trailer wheels on the down hill side of the wheels.
5. Start the vehicle, hold the brakes, shift to neutral, release the parking brake and slowly release the brakes until the trailer chocks absorb the load.
6. Reapply the brakes, reapply the parking brake and shift the vehicle to R (Reverse) for manual transaxle or P (Park) for automatic transaxle.
7. Shut off the vehicle and release the vehicle brakes but leave the parking brake set.

⚠ WARNING - Parking brake

It can be dangerous to get out of your vehicle if the parking brake is not firmly set.

If you have left the engine running, the vehicle can move suddenly. You or others could be seriously or fatally injured.

When you are ready to leave after parking on a hill

1. With the manual transaxle in Neutral or automatic transaxle in P (Park), apply your brakes and hold the brake pedal down while you:
   - Start your engine;
   - Shift into gear; and
   - Release the parking brake.
2. Slowly remove your foot from the brake pedal.
3. Drive slowly until the trailer is clear of the chocks.
4. Stop and have someone pick up and store the chocks.

Maintenance when trailer towing

Your vehicle will need service more often when you regularly pull a trailer. Important items to pay particular attention to include engine oil, automatic transaxle fluid, axle lubricant and cooling system fluid. Brake condition is another important item to frequently check. Each item is covered in this manual, and the Index will help you find them quickly. If you're trailering, it is a good idea to review these sections before you start your trip.

Do not forget to also maintain your trailer and hitch. Follow the maintenance schedule that accompanied your trailer and check it periodically. Preferably, conduct the check at the start of each day's driving. Most importantly, all hitch nuts and bolts should be tight.

⚠ CAUTION

- ***Due to higher load during trailer usage, overheating might occur in hot days or during uphill driving. If the coolant gauge indicates over-heating, switch off the air conditioner and stop the vehicle in a safe area to cool down the engine.***
- ***When towing check transaxle fluid more frequently.***
- ***If your vehicle is not equipped with an air conditioner, you should install a condenser fan to improve engine performance when towing a trailer.***

If you do decide to pull a trailer

Here are some important points if you decide to pull a trailer:

- Consider using a sway control. You can ask a hitch dealer about sway control.
- Do not do any towing with your car during its first 2,000 km (1,200 miles) in order to allow the engine to properly break in. Failure to heed this caution may result in serious engine or transaxle damage.
- When towing a trailer, be sure to consult an authorized HYUNDAI dealer for further information on additional requirements such as a towing kit, etc.
- Always drive your vehicle at a moderate speed (less than 100 km/h (60 mph)).
- On a long uphill grade, do not exceed 70 km/h (45 mph) or the posted towing speed limit, whichever is lower.
- The chart contains important considerations that have to do with weight:

For Europe

Item \ Engine		Gasoline Engine			Diesel Engine		
		Nu 2.0		Gamma 1.6	U2 1.7 (Low)	U2 1.7 (High)	
		M/T	A/T	M/T	M/T	M/T	A/T
Maximum trailer weight kg (lbs.)	Without brake System	700 (1543)	700 (1543)	600 (1323)	700 (1543)	700 (1543)	700 (1543)
	With brake System	1500 (3307)	1500 (3307)	1300 (2866)	1500 (3307)	1800 (3968)	1500 (3307)
Maximum permissible static vertical load on the coupling device kg (lbs.)		70 (154)	70 (154)	60 (132)	80 (176)	80 (176)	70 (154)
Recommended distance from rear wheel center to coupling point mm (Inch)		1180 (46.4)					

Except Europe

Item \ Engine		Gasoline Engine		Diesel Engine	
		Nu 2.0		U2 1.7	
		M/T	A/T	M/T	M/T
Maximum trailer weight kg (lbs.)	Without brake System	650 (1433)	650 (1433)	700 (1543)	650 (1433)
	With brake System	1300 (2866)	1300 (2866)	1500 (3307)	1300 (2866)
Maximum permissible static vertical load on the coupling device kg (lbs.)		60 (132)	60 (132)	70 (154)	60 (132)
Recommended distance from rear wheel center to coupling point mm (Inch)		1180 (46.4)			

M/T : Manual transaxle
A/T : Automatic transaxle

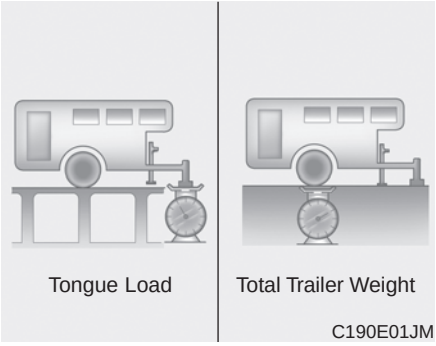

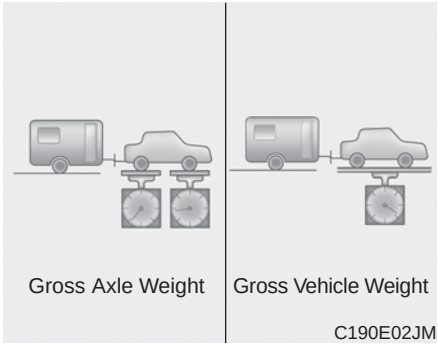

Weight of the trailer

What is the maximum safe weight of a trailer? It should never weigh more than the maximum trailer weight with trailer brakes. But even that can be too heavy.

It depends on how you plan to use your trailer. For example, speed, altitude, road grades, outside temperature and how often your vehicle is used to pull a trailer are all important. The ideal trailer weight can also depend on any special equipment that you have on your vehicle.

Weight of the trailer tongue

The tongue load of any trailer is an important weight to measure because it affects the total gross vehicle weight (GVW) of your vehicle. This weight includes the curb weight of the vehicle, any cargo you may carry in it, and the people who will be riding in the vehicle. And if you will tow a trailer, you must add the tongue load to the GVW because your vehicle will also be carrying that weight.

The trailer tongue should weigh a maximum of 10% of the total loaded trailer weight, within the limits of the maximum permissible trailer tongue load. After you've loaded your trailer, weigh the trailer and then the tongue, separately, to see if the weights are proper. If they aren’t, you may be able to correct them simply by moving some items around in the trailer.

⚠ WARNING - Trailer

- **Never load a trailer with more weight in the rear than in the front. The front should be loaded with approximately 60% of the total trailer load; the rear should be loaded with approximately 40% of the total trailer load.**
- **Never exceed the maximum weight limits of the trailer or trailer towing equipment. Improper loading can result in damage to your vehicle and/or personal injury. Check weights and loading at a commercial scale or highway patrol office equipped with scales.**
- **An improperly loaded trailer can cause loss of vehicle control.**

✻ NOTICE

With increasing altitude the engine performance decreases. From 1.000 m above sea level and for every 1.000 m thereafter 10% of vehicle/trailer weight (trailer weighter + gross vehicle weight) must be deducted.

VEHICLE WEIGHT

This section will guide you in the proper loading of your vehicle and/or trailer, to keep your loaded vehicle weight within its design rating capability, with or without a trailer. Properly loading your vehicle will provide maximum return of the vehicle design performance. Before loading your vehicle, familiarize yourself with the following terms for determining your vehicle's weight ratings, with or without a trailer, from the vehicle's specifications and the certification label:

Base curb weight

This is the weight of the vehicle including a full tank of fuel and all standard equipment. It does not include passengers, cargo, or optional equipment.

Vehicle curb weight

This is the weight of your new vehicle when you picked it up from your dealer plus any aftermarket equipment.

Cargo weight

This figure includes all weight added to the Base Curb Weight, including cargo and optional equipment.

GAW (Gross axle weight)

This is the total weight placed on each axle (front and rear) - including vehicle curb weight and all payload.

GAWR (Gross axle weight rating)

This is the maximum allowable weight that can be carried by a single axle (front or rear). These numbers are shown on the certification label.
The total load on each axle must never exceed its GAWR.

GVW (Gross vehicle weight)

This is the Base Curb Weight plus actual Cargo Weight plus passengers.

GVWR (Gross vehicle weight rating)

This is the maximum allowable weight of the fully loaded vehicle (including all options, equipment, passengers and cargo). The GVWR is shown on the certification label.

Overloading

⚠ WARNING - Vehicle weight

The gross axle weight rating (GAWR) and the gross vehicle weight rating (GVWR) for your vehicle are on the certification label attached to the driver's (or front passenger's) door. Exceeding these ratings can cause an accident or vehicle damage. You can calculate the weight of your load by weighing the items (and people) before putting them in the vehicle. Be careful not to overload your vehicle.

Road warning / 6-2
In case of an emergency while driving / 6-3
If the engine does not start / 6-4
Emergency starting / 6-5
If the engine overheats / 6-7
If you have a flat tire / 6-8
Tire pressure monitoring system (TPMS) / 6-16
If you have a flat tire (with TireMobilityKit) / 6-21
Towing / 6-26
Emergency commodity / 6-30

What to do in an emergency

6

ROAD WARNING

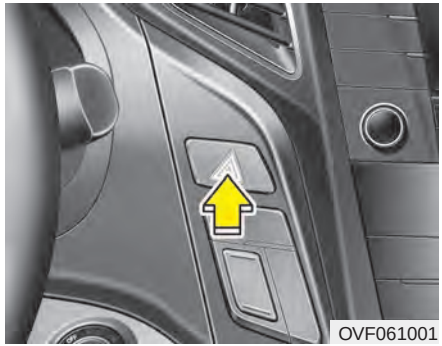
OVF061001

Hazard warning flasher

The hazard warning flasher serves as a warning to other drivers to exercise extreme caution when approaching, overtaking, or passing your vehicle.

It should be used whenever emergency repairs are being made or when the vehicle is stopped near the edge of a roadway.

Press the flasher switch with the ignition switch in any position. The flasher switch is located in the center console switch panel. All turn signal lights will flash simultaneously.

- The hazard warning flasher operates whether your vehicle is running or not.
- The turn signals do not work when the hazard flasher is on.
- The hazard warning flasher should always be on while the vehicle is being towed.

IN CASE OF AN EMERGENCY WHILE DRIVING

If the engine stalls at a crossroad or crossing

- If the engine stalls at a crossroad or crossing, set the shift lever in the N (Neutral) position and then push the vehicle to a safe place.
- If your vehicle has a manual transaxle not equipped with a ignition lock switch, the vehicle can move forward by shifting to the 2(Second) or 3(Third) gear and then turning the starter without depressing the clutch pedal.

If you have a flat tire while driving

If a tire goes flat while you are driving:

1. Take your foot off the accelerator pedal and let the vehicle slow down while driving straight ahead. Do not apply the brakes immediately or attempt to pull off the road as this may cause a loss of control. When the vehicle has slowed to such a speed that it is safe to do so, brake carefully and pull off the road. Drive off the road as far as possible and park on firm, level ground. If you are on a divided highway, do not park in the median area between the two traffic lanes.
2. When the vehicle is stopped, turn on your emergency hazard flashers, set the parking brake and put the transaxle in P (automatic transaxle) or reverse (manual transaxle).
3. Have all passengers get out of the vehicle. Be sure they all get out on the side of the vehicle that is away from traffic.
4. When changing a flat tire, follow the instruction provided later in this section.

If engine stalls while driving

1. Reduce your speed gradually, keeping a straight line. Move cautiously off the road to a safe place.
2. Turn on your emergency flashers.
3. Try to start the engine again. If your vehicle does not start, contact an authorized HYUNDAI dealer or seek other qualified assistance.

IF THE ENGINE DOES NOT START

If engine doesn't turn over or turns over slowly

1. If your vehicle has an automatic transaxle, be sure the shift lever is in N (Neutral) or P (Park) and the emergency brake is set.
2. Check the battery connections to be sure they are clean and tight.
3. Turn on the interior light. If the light dims or goes out when you operate the starter, the battery is discharged.
4. Check the starter connections to be sure they are securely tightened.
5. Do not push or pull the vehicle to start it. See instructions for "Jump starting".

⚠ WARNING

If the engine does not start, do not push or pull the vehicle to start it. This could result in a collision or cause other damage. In addition, push or pull starting may cause the catalytic converter (if equipped) to be overloaded and create a fire hazard.

If engine turns over normally but does not start

1. Check fuel level.
2. With the ignition switch in the LOCK/OFF position, check all connectors at ignition, coil and spark plugs. Reconnect any that may be disconnected or loose.
3. Check the fuel line in the engine compartment.
4. If the engine still does not start, call an authorized HYUNDAI dealer or seek other qualified assistance.

EMERGENCY STARTING

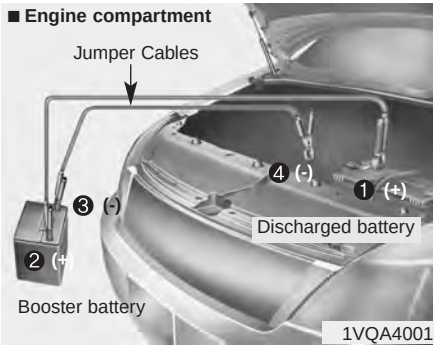

Connect cables in numerical order and disconnect in reverse order.

Jump starting

Jump starting can be dangerous if done incorrectly. Therefore, to avoid harm to yourself or damage to your vehicle or battery, follow the jump starting procedures. If in doubt, we strongly recommend that you have a competent technician or towing service jump start your vehicle.

⚠ CAUTION

Use only a 12-volt jumper system. You can damage a 12-volt starting motor, ignition system, and other electrical parts beyond repair by use of a 24-volt power supply (either two 12-volt batteries in series or a 24-volt motor generator set).

⚠ WARNING - Battery

Never attempt to check the electrolyte level of the battery as this may cause the battery to rupture or explode causing serious injury.

⚠ WARNING - Battery

- **Keep all flames or sparks away from the battery. The battery produces hydrogen gas which may explode if exposed to flame or sparks.**

  If these instructions are not followed exactly, serious personal injury and damage to the vehicle may occur! If you are not sure how to follow this procedure, seek qualified assistance. Automobile batteries contain sulfuric acid. This is poisonous and highly corrosive. When jump starting, wear protective glasses and be careful not to get acid on yourself, your clothing or on the vehicle.
- **Do not attempt to jump start the vehicle if the discharged battery is frozen or if the electrolyte level is low; the battery may rupture or explode.**

Jump starting procedure

⚠ CAUTION - AGM battery (if equipped)

- ***Absorbent Glass Matt (AGM) batteries are maintenance-free and should only be serviced by an authorized HYUNDAI dealer. For charging your AGM battery, use only fully automatic battery chargers that are specially developed for AGM batteries.***
- ***When replacing the AGM battery, use only the HYUNDAI genuine battery for the ISG system.***
- ***Do not open or remove the cap on top of the battery. This may cause leaks of internal electrolyte that could result in severe injury.***
- ***If the AGM battery is reconnected or replaced, ISG function will not operate immediately.***

  If you want to use the ISG function, the battery sensor needs to be calibrated for approximately 4 hours with the ignition off.

1. Make sure the booster battery is 12-volt and that its negative terminal is grounded.
2. If the booster battery is in another vehicle, do not allow the vehicles to touch.
3. Turn off all unnecessary electrical loads.
4. Connect the jumper cables in the exact sequence shown in the illustration. First connect one end of a jumper cable to the positive terminal of the discharged battery (1), then connect the other end to the positive terminal on the booster battery (2). Proceed to connect one end of the other jumper cable to the negative terminal of the booster battery (3), then the other end to a solid, stationary, metallic point (for example, the engine lifting bracket) away from the battery (4). Do not connect it to or near any part that moves when the engine is cranked.

   Do not allow the jumper cables to contact anything except the correct battery terminals or the correct ground. Do not lean over the battery when making connections.

⚠ CAUTION - Battery cables

Do not connect the jumper cable from the negative terminal of the booster battery to the negative terminal of the discharged battery. This can cause the discharged battery to overheat and crack, releasing battery acid.

5. Start the engine of the vehicle with the booster battery and let it run at 2,000 rpm, then start the engine of the vehicle with the discharged battery.

If the cause of your battery discharging is not apparent, you should have your vehicle checked by an authorized HYUNDAI dealer.

Push-starting

Your manual transaxle-equipped vehicle should not be push-started because it might damage the emission control system. Vehicles equipped with automatic transaxle cannot be push-started. Follow the directions in this section for jump-starting.

⚠ WARNING

Never tow a vehicle to start it because the sudden surge forward when the engine starts could cause a collision with the tow vehicle.

IF THE ENGINE OVERHEATS

If your temperature gauge indicates overheating, you will experience a loss of power, or hear loud pinging or knocking, the engine is probably too hot. If this happens, you should:

1. Pull off the road and stop as soon as it is safe to do so.
2. Place the shift lever in P (automatic transaxle) or neutral (manual transaxle) and set the parking brake. If the air conditioning is on, turn it off.
3. If engine coolant is running out under the vehicle or steam is coming out from the hood, stop the engine. Do not open the hood until the coolant has stopped running or the steaming has stopped. If there is no visible loss of engine coolant and no steam, leave the engine running and check to be sure the engine cooling fan is operating. If the fan is not running, turn the engine off.
4. Check to see if the water pump drive belt is missing. If it is not missing, check to see that it is tight. If the drive belt seems to be satisfactory, check for coolant leaking from the radiator, hoses or under the vehicle. (If the air conditioning had been in use, it is normal for cold water to be draining from it when you stop).

⚠ WARNING

While the engine is running, keep hair, hands and clothing away from moving parts such as the fan and drive belts to prevent injury.

5. If the water pump drive belt is broken or engine coolant is leaking out, stop the engine immediately and call the nearest authorized HYUNDAI dealer for assistance.

⚠ WARNING

Do not remove the radiator cap when the engine is hot. This can allow coolant to blow out of the opening and cause serious burns.

6. If you cannot find the cause of the overheating, wait until the engine temperature has returned to normal. Then, if coolant has been lost, carefully add coolant to the reservoir to bring the fluid level in the reservoir up to the halfway mark.
7. Proceed with caution, keeping alert for further signs of overheating. If overheating happens again, call an authorized HYUNDAI dealer for assistance.

⚠ CAUTION

Serious loss of coolant indicates there is a leak in the cooling system and this should be checked as soon as possible by an authorized HYUNDAI dealer.

IF YOU HAVE A FLAT TIRE

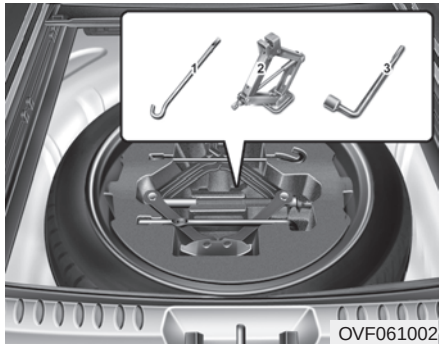

Jack and tools

The jack, jack handle, wheel lug nut wrench are stored in the luggage compartment.

Pull up the luggage box cover to reach this equipment.

(1) Jack handle

(2) Jack

(3) Wheel lug nut wrench

Jacking instructions

The jack is provided for emergency tire changing only.

To prevent the jack from “rattling” while the vehicle is in motion, store it properly and fasten the jack screw fully.

Follow jacking instructions to reduce the possibility of personal injury.

⚠ WARNING - Changing tires

- **Never attempt vehicle repairs in the traffic lanes of a public road or highway.**
- **Always move the vehicle completely off the road and onto the shoulder before trying to change a tire. The jack should be used on firm level ground. If you cannot find a firm level place off the road, call a towing service company for assistance.**
- **Be sure to use the correct front and rear jacking positions on the vehicle; never use the bumpers or any other part of the vehicle for jack support.**

(Continued)

(Continued)

- **The vehicle can easily roll off the jack causing serious injury or death. No person should place any portion of their body under a vehicle that is supported only by a jack; use vehicle support stands.**
- **Do not start or run the engine while the vehicle is on the jack.**
- **Do not allow anyone to remain in the vehicle while it is on the jack.**
- **Make sure any children present are in a secure place away from the road and from the vehicle to be raised with the jack.**

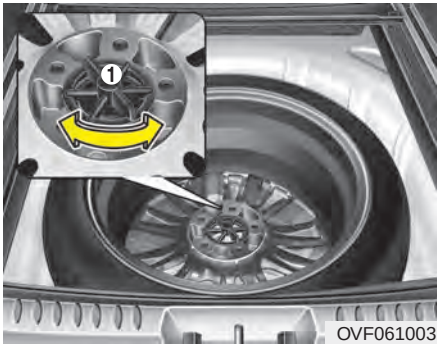

OVF061003

Removing and storing the spare tire

Turn the tire hold-down wing bolt (1) counterclockwise.

Store the tire in the reverse order of removal.

To prevent the spare tire and tools from “rattling” while the vehicle is in motion, store them properly.

OED066033

Changing tires

1. Park on a level surface and apply the parking brake firmly.
2. Shift the shift lever into R (Reverse) with manual transaxle or P (Park) with automatic transaxle.
3. Activate the hazard warning flasher.

OVF061004

4. Remove the wheel lug nut wrench, jack, jack handle, and spare tire from the vehicle.
5. Block both the front and rear of the wheel that is diagonally opposite the jack position.

⚠ WARNING - Changing a tire

- **To prevent vehicle movement while changing a tire, always set the parking brake fully, and always block the wheel diagonally opposite the wheel being changed.**
- **We recommend that the wheels of the vehicle be chocked, and that no person remain in a vehicle that is being jacked.**

OVF061005

6. Loosen the wheel lug nuts counterclockwise one turn each, but do not remove any nut until the tire has been raised off the ground.

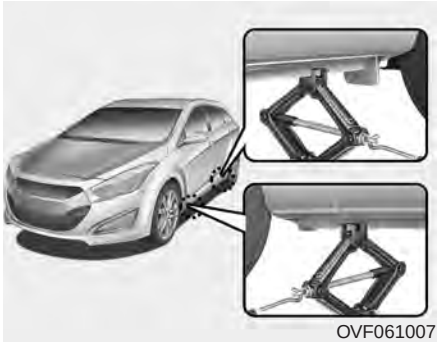
OVF061007

7. Place the jack at the front or rear jacking position closest to the tire you are changing. Place the jack at the designated locations under the frame. The jacking positions are plates welded to the frame with two tabs and a raised dot to index with the jack.

⚠ WARNING - Jack location

To reduce the possibility of injury, be sure to use only the jack provided with the vehicle and in the correct jack position; never use any other part of the vehicle for jack support.

OVF061008

8. Insert the jack handle into the jack and turn it clockwise, raising the vehicle until the tire just clears the ground. This measurement is approximately 30 mm (1.2 in). Before removing the wheel lug nuts, make sure the vehicle is stable and that there is no chance for movement or slippage.

9. Loosen the wheel nuts and remove them with your fingers. Slide the wheel off the studs and lay it flat so it cannot roll away. To put the wheel on the hub, pick up the spare tire, line up the holes with the studs and slide the wheel onto them. If this is difficult, tip the wheel slightly and get the top hole in the wheel lined up with the top stud. Then jiggle the wheel back and forth until the wheel can be slid over the other studs.

⚠ WARNING

- **Wheels and wheel covers may have sharp edges. Handle them carefully to avoid possible severe injury.**
- **Before putting the wheel into place, be sure that there is nothing on the hub or wheel (such as mud, tar, gravel, etc.) that interferes with the wheel from fitting solidly against the hub. If there is, remove it. If there is not good contact on the mounting surface between the wheel and hub, the wheel nuts could come loose and cause the loss of a wheel. Loss of a wheel may result in loss of control of the vehicle. This may cause serious injury or death.**

10. To reinstall the wheel, hold it on the studs, put the wheel nuts on the studs and tighten them finger tight. The nuts should be installed with their tapered small diameter ends directed inward. Jiggle the tire to be sure it is completely seated, then tighten the nuts as much as possible with your fingers again.
11. Lower the vehicle to the ground by turning the wheel nut wrench counterclockwise.

OVF061009

Then position the wrench as shown in the drawing and tighten the wheel nuts. Be sure the socket is seated completely over the nut. Do not stand on the wrench handle or use an extension pipe over the wrench handle.

Go around the wheel tightening every nut following the numerical sequence shown in the image until they are all tight. Then double-check each nut for tightness. After changing wheels, have an authorized HYUNDAI dealer tighten the wheel nuts to their proper torque as soon as possible.

Wheel nut tightening torque:

Steel wheel & aluminium alloy wheel:

9~11 kg.m (65~79 lb.ft)

If you have a tire gauge, remove the valve cap and check the air pressure. If the pressure is lower than recommended, drive slowly to the nearest service station and inflate to the correct pressure. If it is too high, adjust it until it is correct. Always reinstall the valve cap after checking or adjusting tire pressure. If the cap is not replaced, air may leak from the tire. If you lose a valve cap, buy another and install it as soon as possible.

After you have changed wheels, always secure the flat tire in its place and return the jack and tools to their proper storage locations.

⚠ CAUTION

Your vehicle has metric threads on the wheel studs and nuts. Make certain during wheel removal that the same nuts that were removed are reinstalled - or, if replaced, that nuts with metric threads and the same chamfer configuration are used. Installation of a non-metric thread nut on a metric stud or vice-versa will not secure the wheel to the hub properly and will damage the stud so that it must be replaced.

Note that most lug nuts do not have metric threads. Be sure to use extreme care in checking for thread style before installing aftermarket lug nuts or wheels. If in doubt, consult an authorized HYUNDAI dealer.

⚠ WARNING - Wheel studs

If the studs are damaged, they may lose their ability to retain the wheel. This could lead to the loss of the wheel and a collision resulting in serious injuries.

To prevent the jack, jack handle, wheel lug nut wrench and spare tire from rattling while the vehicle is in motion, store them properly.

⚠ WARNING - Inadequate spare tire pressure

Check the inflation pressures as soon as possible after installing the spare tire. Adjust it to the specified pressure, if necessary. Refer to “Tires and wheels” in section 8.

Important - use of compact spare tire (if equipped)

Your vehicle is equipped with a compact spare tire. This compact spare tire takes up less space than a regular-size tire. This tire is smaller than a conventional tire and is designed for temporary use only.

⚠ CAUTION

- ***You should drive carefully when the compact spare is in use. The compact spare should be replaced by the proper conventional tire and rim at the first opportunity.***
- ***The operation of this vehicle is not recommended with more than one compact spare tire in use at the same time.***

⚠ WARNING

The compact spare tire is for emergency use only. Do not operate your vehicle on this compact spare at the speed over 80 km/h (50 mph). The original tire should be repaired or replaced as soon as possible to avoid failure of the spare possibly leading to personal injury or death.

The compact spare should be inflated to 420 kPa (60 psi).

✻ NOTICE

Check the inflation pressure after installing the spare tire. Adjust it to the specified pressure, as necessary.

When using a compact spare tire, observe the following precautions:

- Under no circumstances should you exceed 80 km/h (50 mph); a higher speed could damage the tire.
- Ensure that you drive slowly enough to avoid all hazards. Any road hazard, such as a pothole or debris, could seriously damage the compact spare.
- Any continuous road use of this tire could result in tire failure, loss of vehicle control, and possible personal injury.
- Do not exceed the vehicle's maximum load rating or the load-carrying capacity shown on the sidewall of the compact spare tire.
- Avoid driving over obstacles. The compact spare tire diameter is smaller than the diameter of a conventional tire and reduces the ground clearance approximately 25 mm (1 inch), which could result in damage to the vehicle.

- Do not take this vehicle through an automatic car wash while the compact spare tire is installed.
- Do not use tire chains on the compact spare tire. Because of the smaller size, a tire chain will not fit properly. This could damage the vehicle and result in loss of the chain.
- The compact spare tire should not be installed on the front axle if the vehicle must be driven in snow or on ice.
- Do not use the compact spare tire on any other vehicle because this tire has been designed especially for your vehicle.
- The compact spare tire's tread life is shorter than a regular tire. Inspect your compact spare tire regularly and replace worn compact spare tires with the same size and design, mounted on the same wheel.
- The compact spare tire should not be used on any other wheels, nor should standard tires, snow tires, wheel covers or trim rings be used with the compact spare wheel. If such use is attempted, damage to these items or other car components may occur.
- Do not use more than one compact spare tire at a time.
- Do not tow a trailer while the compact spare tire is installed.

TIRE PRESSURE MONITORING SYSTEM (TPMS) (IF EQUIPPED)

OVF061011

■ Type A

■ Type B

OVF061012

(1) Low tire pressure telltale / TPMS malfunction indicator

(2) Low tire pressure position telltale (Shown on the LCD display)

Each tire, including the spare (if provided), should be checked monthly when cold and inflated to the inflation pressure recommended by the vehicle manufacturer on the vehicle placard or tire inflation pressure label. (If your vehicle has tires of a different size than the size indicated on the vehicle placard or tire inflation pressure label, you should determine the proper tire inflation pressure for those tires.)

As an added safety feature, your vehicle has been equipped with a tire pressure monitoring system (TPMS) that illuminates a low tire pressure telltale when one or more of your tires is significantly under-inflated. Accordingly, when the low tire pressure telltale illuminates, you should stop and check your tires as soon as possible, and inflate them to the proper pressure. Driving on a significantly under-inflated tire causes the tire to overheat and can lead to tire failure. Under-inflation also reduces fuel efficiency and tire tread life, and may affect the vehicle's handling and stopping ability.

Please note that the TPMS is not a substitute for proper tire maintenance, and it is the driver's responsibility to maintain correct tire pressure, even if under-inflation has not reached the level to trigger illumination of the TPMS low tire pressure telltale.

Your vehicle has also been equipped with a TPMS malfunction indicator to indicate when the system is not operating properly. The TPMS malfunction indicator is combined with the low tire pressure telltale. When the system detects a malfunction, the telltale will flash for approximately 1 minute and then remain continuously illuminated. This sequence will continue upon subsequent vehicle start-ups as long as the malfunction exists. When the TPMS malfunction indicator remains illuminated after blinking for approximately 1 minute, the system may not be able to detect or signal low tire pressure as intended.

TPMS malfunctions may occur for a variety of reasons, including the installation of replacement or alternate tires or wheels on the vehicle that prevent the TPMS from functioning properly. Always check the TPMS malfunction telltale after replacing one or more tires or wheels on your vehicle to ensure that the replacement or alternate tires and wheels allow the TPMS to continue to function properly.

✻ NOTICE

Take your vehicle to the nearest authorized HYUNDAI dealer and have the system checked if any of the below happens:

1. **The low tire pressure telltale/ TPMS malfunction indicator and low tire pressure position telltale do not illuminate.**
2. **The TPMS malfunction indicator remains illuminated after blinking for approximately 1 minute.**
3. **The Low tire pressure position telltale remains illuminated.**

Low tire pressure telltale

Low tire pressure position telltale

When the tire pressure monitoring system warning indicators are illuminated, one or more of your tires is significantly under-inflated. The low tire pressure position telltale light will indicate which tire is significantly under-inflated by illuminating the corresponding position light.

If either telltale illuminates, immediately reduce your speed, avoid hard cornering and anticipate increased stopping distances. You should stop and check your tires as soon as possible. Inflate the tires to the proper pressure as indicated on the vehicle's placard or tire inflation pressure label located on the driver's side center pillar outer panel. If you cannot reach a service station or if the tire cannot hold the newly added air, replace the low pressure tire with a spare tire.

After you replace the low pressure tire with the spare tire, one of the following will happen:

- The TPMS malfunction indicator may blink for approximately 1 minute and then remain continuously illuminated because the TPMS sensor is not mounted on the spare wheel. (changed tire equipped with a sensor not in the vehicle)
- The TPMS malfunction indicator will remain continuously illuminated while driving because the TPMS sensor is not mounted on the spare wheel. (changed tire equipped with a sensor in the vehicle)

⚠ CAUTION

In winter or cold weather, the low tire pressure telltale may illuminate if the tire pressure was adjusted to the recommended tire inflation pressure in warm weather. It does not mean your TPMS is malfunctioning because the decreased temperature leads to a proportional lowering of tire pressure.

When you drive your vehicle from a warm area to a cold area or from a cold area to a warm area, or the outside temperature is greatly higher or lower, you should check the tire inflation pressure and adjust the tires to the recommended tire inflation pressure.

⚠ WARNING - Low pressure damage

Significantly low tire pressure makes the vehicle unstable and can contribute to loss of vehicle control and increased braking distances.

Continued driving on low pressure tires can cause the tires to overheat and fail.

TPMS (Tire Pressure Monitoring System) malfunction indicator

The TPMS malfunction indicator will illuminate after it blinks for approximately one minute when there is a problem with the Tire Pressure Monitoring System. If the system is able to correctly detect an under inflation warning at the same time as system failure then the TPMS malfunction indicator remains illuminated after blinking for approximately 1 minute and the low tire pressure position telltale will illuminate e.g. if Front Left sensor fails, the TPMS malfunction indicator remains illuminated after blinking for approximately 1 minute, but if the Front Right, Rear Left, or Rear Right tire is under-inflated, the low tire pressure position telltales may illuminate together with the TPMS malfunction indicator.

Have the system checked by an authorized HYUNDAI dealer as soon as possible to determine the cause of the problem.

⚠ **CAUTION**

- ***The TPMS malfunction indicator may blink for approximately 1 minute and then remain continuously illuminated if the vehicle is moving around electric power supply cables or radios transmitter such as at police stations, government and public offices, broadcasting stations, military installations, airports, or transmitting towers, etc. This can interfere with normal operation of the Tire Pressure Monitoring System (TPMS).***
- ***The TPMS malfunction indicator may blink for approximately 1 minute and then remain continuously illuminated if snow chains are used or some separate electronic devices such as notebook computer, mobile charger, remote starter or navigation etc., are used in the vehicle. This can interfere with normal operation of the Tire Pressure Monitoring System (TPMS).***

Changing a tire with TPMS

If you have a flat tire, the low Tire Pressure and Position telltales will come on. Have the flat tire repaired by an authorized HYUNDAI dealer as soon as possible or replace the flat tire with the spare tire.

⚠ **CAUTION**

Never use a puncture-repairing agent not approved by HYUNDAI to repair and/or inflate a low pressure tire. The tire sealant not approved by HYUNDAI may damage the tire pressure sensor.

The sealant on the tire pressure sensor and wheel shall be eleminated when you replace the tire with a new one.

Each wheel is equipped with a tire pressure sensor mounted inside the tire behind the valve stem. You must use TPMS specific wheels. It is recommended that you always have your tires serviced by an authorized HYUNDAI dealer.

After you replace the low pressure tire with the spare tire, one of the following will happen:

- The TPMS malfunction indicator may blink for approximately 1 minute and then remain continuously illuminated because the TPMS sensor is not mounted on the spare wheel. (changed tire equipped with a sensor not in the vehicle)
- The TPMS malfunction indicator will remain continuously illuminated while driving because the TPMS sensor is not mounted on the spare wheel. (changed tire equipped with a sensor in the vehicle)

You may not be able identify a low tire by simply looking at it. Always use a good quality tire pressure gauge to measure the tire's inflation pressure. Please note that a tire that is hot (from being driven) will have a higher pressure measurement than a tire that is cold (from sitting stationary for at least 3 hours and driven less than 1 mile (1.6 km) during that 3 hour period).

Allow the tire to cool before measuring the inflation pressure. Always be sure the tire is cold before inflating to the recommended pressure.

A cold tire means the vehicle has been sitting for 3 hours and driven for less than 1 mile (1.6 km) in that 3 hour period.

⚠ CAUTION

Do not use any tire sealant except the Tire Mobility Kit approved by HYUNDAI if your vehicle is equipped with a Tire Pressure Monitoring System. The liquid sealant can damage the tire pressure sensors.

⚠ WARNING - TPMS

- **The TPMS cannot alert you to severe and sudden tire damage caused by external factors such as nails or road debris.**
- **If you feel any vehicle instability, immediately take your foot off the accelerator, apply the brakes gradually and with light force, and slowly move to a safe position off the road.**

⚠ WARNING - Protecting TPMS

Tampering with, modifying, or disabling the Tire Pressure Monitoring System (TPMS) components may interfere with the system's ability to warn the driver of low tire pressure conditions and/or TPMS malfunctions. Tampering with, modifying, or disabling the Tire Pressure Monitoring System (TPMS) components may void the warranty for that portion of the vehicle.

IF YOU HAVE A FLAT TIRE (WITH TIREMOBILITYKIT, IF EQUIPPED)

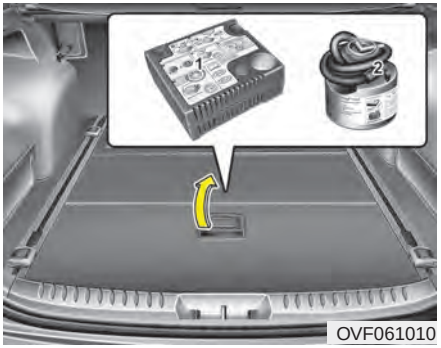

OVF061010

Please read the instructions before using the TireMobilityKit.

(1) Compressor

(2) Sealant bottle

OEL069019

Introduction

With the TireMobilityKit you stay mobile even after experiencing a tire puncture.

The system of compressor and sealing compound effectively and comfortably seals most punctures in a passenger car tire caused by nails or similar objects and reinflates the tire.

After you ensured that the tire is properly sealed you can drive cautiously on the tire (up to 200 km (120 miles)) at a max. speed of 80 km/h (50 mph) in order to reach a vehicle or tire dealer to have the tire replaced.

It is possible that some tires, especially with larger punctures or damage to the sidewall, cannot be sealed completely.

Air pressure loss in the tire may adversely affect tire performance.

For this reason, you should avoid abrupt steering or other driving maneuvers, especially if the vehicle is heavily loaded or if a trailer is in use.

The TireMobilityKit is not designed or intended as a permanent tire repair method and is to be used for one tire only.

This instruction shows you step by step how to temporarily seal the puncture simply and reliably.

Read the section "Notes on the safe use of the TireMobilityKit".

⚠ WARNING

Do not use the TireMobilityKit if a tire is severely damaged by driving run flat or with insufficient air pressure.

Only punctured areas located within the tread region of the tire can be sealed using the TireMobilityKit.

Damage to the sidewall must not be repaired due to safety reasons.

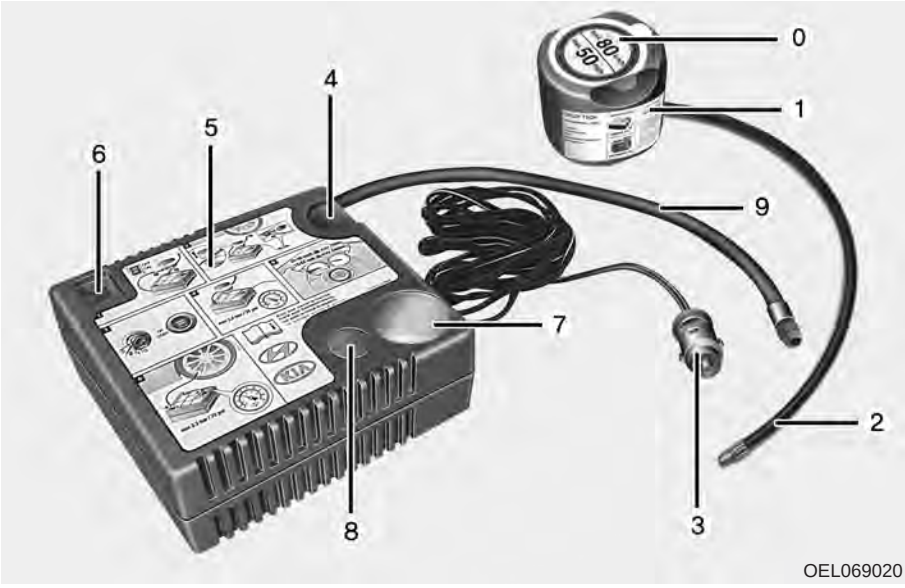

Components of the TireMobilityKit

0. Speed restriction label
1. Sealant bottle and label with speed restriction
2. Filling hose from sealant bottle to wheel
3. Connectors and cable for the power outlet direct connection
4. Holder for the sealant bottle
5. Compressor
6. On/off switch
7. Pressure gauge for displaying the tire inflation pressure
8. Button for reducing tire inflation pressure
9. Hose to connect compressor and sealant bottle or compressor and wheel

Connectors, cable and connection hose are stored in the compressor housing.

⚠ WARNING

- **Before using the TireMobilityKit, follow the instructions on the sealant bottle.**
- **Remove the label with the speed restriction from the sealant bottle and apply it to the steering wheel.**
- **Please note the expiry date on the sealant bottle.**

Using the TireMobilityKit

1. Filling the sealant

Strictly follow the specified sequence, otherwise the sealant may escape under high pressure.

1) Shake the sealant bottle.
2) Screw connection hose 9 onto the connector of the sealant bottle.
3) Ensure that button 8 on the compressor is not pressed.
4) Unscrew the valve cap from the valve of the defective wheel and screw filling hose 2 of the sealant bottle onto the valve.
5) Insert the sealant bottle into the housing of the compressor so that the bottle is upright.

OEL069019

6) Ensure that the compressor is switched off, position 0.
7) Connect between compressor and the vehicle power outlet using the cable and connectors.
8) With the ignition switched on:

Switch on the compressor and let it run for approximately 3 minutes to fill the sealant. The inflation pressure of the tire after filling is unimportant.

9) Switch off the compressor.
10) Detach the hoses from the sealant bottle connector and from the tire valve.

Return the TireMobilityKit to its storage location in the vehicle.

⚠ WARNING

Carbon monoxide poisoning and suffocation is possible if the engine is left running in a poorly ventilated or unventilated location (such as inside a building).

Distributing the sealant

Immediately drive approximately 3 km (2 miles) to evenly distribute the sealant in the tire.

⚠ CAUTION

Do not exceed a speed of 80 km/h (50 mph). If possible, do not fall below a speed of 20 km/h (12 mph).

While driving, if you experience any unusual vibration, ride disturbance or noise, reduce your speed and drive with caution until you can safely pull off of the side of the road.

Call for road side service or towing.

Producing the tire inflation pressure

1) After driving approximately 3 km (2 miles), stop at a suitable location.
2) Connect connection hose 9 of the compressor directly to the tire valve.
3) Connect between compressor and the vehicle power outlet using the cable and connectors.
4) Adjust the tire inflation pressure to the recommended tire pressure in section 8. With the ignition switched on, proceed as follows.
   - **To increase the inflation pressure:** Switch on the compressor, position I. To check the current inflation pressure setting, briefly switch off the compressor.

⚠ WARNING

Do not let the compressor run for more than 10 minutes, otherwise the device will overheat and may be damaged.

- **To reduce the inflation pressure:** Press the button 8 on the compressor.

⚠ CAUTION

If the inflation pressure is not maintained, drive the vehicle a second time, refer to Distributing the sealant. Then repeat steps 1 to 4.

Use of the TireMobilityKit may be ineffectual for tire damage larger than approximately 4 mm (0.16 in).

Please contact the nearest HYUNDAI dealer, or a workshop that works according to HYUNDAI repair procedures with correspondingly trained personnel if the tire cannot be made roadworthy with the TireMobilityKit.

⚠ WARNING

The tire inflation pressure must be at least 200 kPa (29 psi). If it is not, do not continue driving. Call for road side service or towing.

Notes on the safe use of the TireMobilityKit

- Park your car at the side of the road so that you can work with the TireMobilityKit away from moving traffic. Place your warning triangle in a prominent place to make passing vehicles aware of your location.
- To be sure your vehicle won't move, even when you're on fairly level ground, always set your parking brake.
- Only use the TireMobilityKit for sealing/inflation passenger car tires. Do not use on motorcycles, bicycles or any other type of tires.
- Do not remove any foreign objects-such as nails or screws -that have penetrated the tire.
- Before using the TireMobilityKit, read the precautionary advice printed on the sealant bottle!
- Provided the car is outdoors, leave the engine running. Otherwise operating the compressor may eventually drain the car battery.
- Never leave the TireMobilityKit unattended while it is being used.
- Do not leave the compressor running for more than 10 min. at a time or it may overheat.
- Do not use the TireMobilityKit if the ambient temperature is below -30°C (-22°F).
- Do not use the sealing compound after its expiration date which can be found on the label of the bottle.
- Keep away from children.

⚠ CAUTION

The Tire Mobility Kit is a temporary fix to the tire and the tire should be inspected by an authorized HYUNDAI dealer as soon as possible.

⚠ WARNING

Have your tire repaired as soon as possible. The tire may loose air pressure at any time after inflating with the TMK.

⚠ CAUTION -TPMS (if equipped)

When using Tire Mobility Kit, the tire sealant can damage the tire pressure sensor. After using the Tire Mobility Kit, have the tire pressure sensor checked by an authorized HYUNDAI dealer.

Technical Data

System voltage: DC 12 V
Working voltage: DC 10 - 15 V
Amperage rating: max. 15 A
Suitable for use at temperatures:
-30 ~ +70°C (-22 ~ +158°F)
Max. working pressure:
6 bar (87 psi)
Size
Compressor: 168 x 150 x 68 mm
(6.6 x 5.9 x 2.7 in.)
Sealant bottle: 104 x ø 85 mm
(4.1 x ø 3.3 in.)
Compressor weight:
1.05 kg (2.31 lbs)
Sealant volume:
300 ml (18.3 cu. in.)

✻ NOTICE

Sealing compound and spare parts can be obtained and replaced at an authorized vehicle or tire dealer. Empty sealing compound bottles may be disposed of at home. Liquid residue from the sealing compound should be disposed of by your vehicle or tire dealer or in accordance with local waste disposal regulations.

TOWING

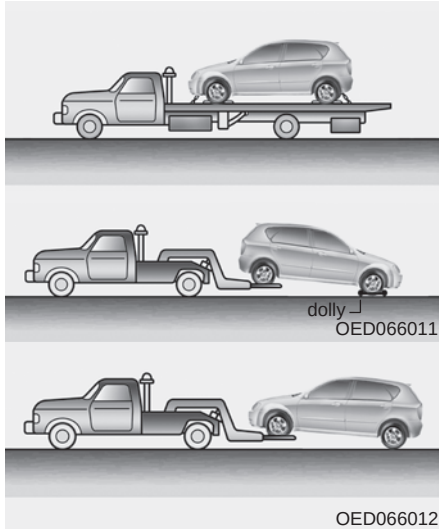

Towing service

If emergency towing is necessary, we recommend having it done by an authorized HYUNDAI dealer or a commercial tow-truck service. Proper lifting and towing procedures are necessary to prevent damage to the vehicle. The use of wheel dollies or flatbed is recommended.

For trailer towing guidelines information, refer to “Trailer towing” in section 5.

It is acceptable to tow the vehicle with the rear wheels on the ground (without dollies) and the front wheels off the ground.

If any of the loaded wheels or suspension components are damaged or the vehicle is being towed with the front wheels on the ground, use a towing dolly under the front wheels.

When being towed by a commercial tow truck and wheel dollies are not used, the front of the vehicle should always be lifted, not the rear.

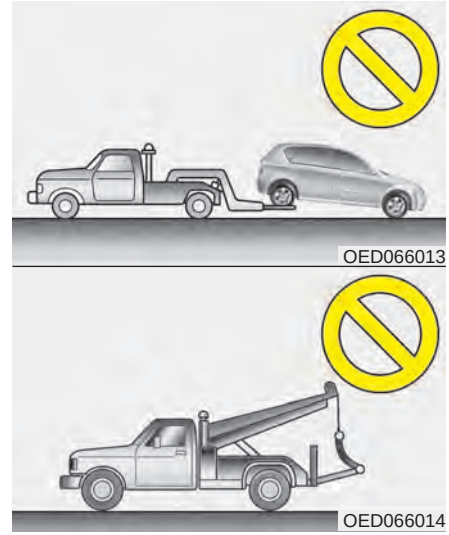

⚠ CAUTION

- ***Do not tow the vehicle backwards with the front wheels on the ground as this may cause damage to the vehicle.***
- ***Do not tow with sling-type equipment. Use wheel lift or flatbed equipment.***

When towing your vehicle in an emergency without wheel dollies :

1. Set the ignition switch in the ACC position.
2. Place the transaxle shift lever in N (Neutral).
3. Release the parking brake.

⚠ CAUTION

Failure to place the transaxle shift lever in N (Neutral) may cause internal damage to the transaxle.

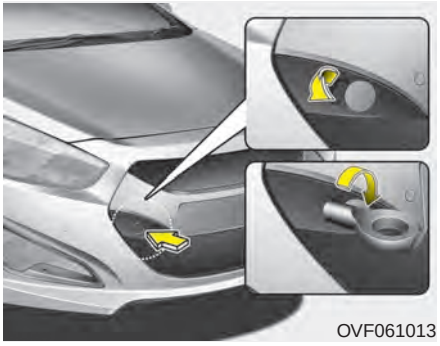

Removable towing hook (if equipped)

1. Open the tailgate, and remove the towing hook from the tool case.
2. Remove the hole cover pressing the lower part of the cover on the front bumper.
3. Install the towing hook by turning it clockwise into the hole until it is fully secured.
4. Remove the towing hook and install the cover after use.

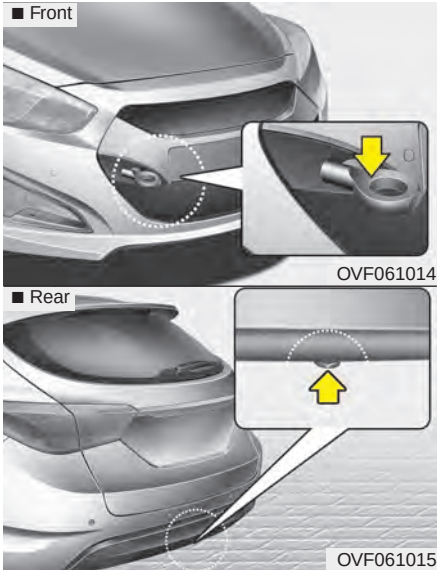

Emergency towing

If towing is necessary, we recommend you to have it done by an authorized HYUNDAI dealer or a commercial tow truck service.

If towing service is not available in an emergency, your vehicle may be temporarily towed using a cable or chain secured to the emergency towing hook under the front (or rear) of the vehicle. Use extreme caution when towing the vehicle. A driver must be in the vehicle to steer it and operate the brakes.

Towing in this manner may be done only on hard-surfaced roads for a short distance and at low speed. Also, the wheels, axles, power train, steering and brakes must all be in good condition.

- Do not use the towing hooks to pull a vehicle out of mud, sand or other conditions from which the vehicle cannot be driven out under its own power.
- Avoid towing a vehicle heavier than the vehicle doing the towing.
- The drivers of both vehicles should communicate with each other frequently.

⚠ CAUTION

- ***Attach a towing strap to the tow hook.***
- ***Using a portion of the vehicle other than the tow hooks for towing may damage the body of your vehicle.***
- ***Use only a cable or chain specifically intended for use in towing vehicles. Securely fasten the cable or chain to the towing hook provided.***

- Before emergency towing, check that the hook is not broken or damaged.
- Fasten the towing cable or chain securely to the hook.
- Do not jerk the hook. Apply steady and even force.
- To avoid damaging the hook, do not pull from the side or at a vertical angle. Always pull straight ahead.

⚠ WARNING

Use extreme caution when towing the vehicle.

- **Avoid sudden starts or erratic driving maneuvers which would place excessive stress on the emergency towing hook and towing cable or chain. The hook and towing cable or chain may break and cause serious injury or damage.**
- **If the disabled vehicle is unable to be moved, do not forcibly continue the towing. Contact an authorized HYUNDAI dealer or a commercial tow truck service for assistance.**
- **Tow the vehicle as straight ahead as possible.**
- **Keep away from the vehicle during towing.**

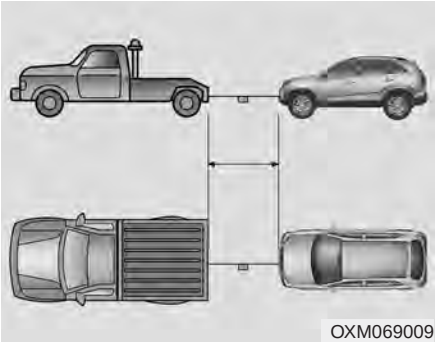

- Use a towing strap less than 5 m (16 feet) long. Attach a white or red cloth (about 30 cm (12 inches) wide) in the middle of the strap for easy visibility.
- Drive carefully so that the towing strap is not loosened during towing.

Emergency towing precautions

- Turn the ignition switch to ACC so the steering wheel isn't locked.
- Place the transaxle shift lever in N (Neutral).
- Release the parking brake.
- Press the brake pedal with more force than normal since you will have reduced brake performance.
- More steering effort will be required because the power steering system will be disabled.
- If you are driving down a long hill, the brakes may overheat and brake performance will be reduced. Stop often and let the brakes cool off.

⚠ CAUTION - Automatic transaxle

- ***If the car is being towed with all four wheels on the ground, it can be towed only from the front. Be sure that the transaxle is in neutral. Be sure the steering is unlocked by placing the ignition switch in the ACC position. A driver must be in the towed vehicle to operate the steering and brakes.***
- ***To avoid serious damage to the automatic transaxle, limit the vehicle speed to 15 km/h (10 mph) and drive less than 1.5 km (1 mile) when towing.***
- ***Before towing, check the automatic transaxle fluid leak under your vehicle. If the automatic transaxle fluid is leaking, a flatbed equipment or towing dolly must be used.***

EMERGENCY COMMODITY (IF EQUIPPED)

There are some emergency commodities in the vehicle to help you respond to the emergency situation.

Fire extinguisher

If there is small fire and you know how to use the fire extinguisher, take the following steps carefully.

1. Pull the pin at the top of the extinguisher that keeps the handle from being accidentally pressed.
2. Aim the nozzle toward the base of the fire.
3. Stand approximately 2.5 m (8 ft) away from the fire and squeeze the handle to discharge the extinguisher. If you release the handle, the discharge will stop.
4. Sweep the nozzle back and forth at the base of the fire. After the fire appears to be out, watch it carefully since it may re-ignite.

First aid kit

There are some items such as scissors, bandage and adhesive tape and etc. in the kit to give first aid to an injured person.

Triangle reflector

Place the triangle reflector on the road to warn oncoming vehicles during emergencies, such as when the vehicle is parked by the roadside due to any problems.

Tire pressure gauge (If equipped)

Tires normally lose some air in day-to-day use, and you may have to add a few pounds of air periodically and it is not usually a sign of a leaking tire, but of normal wear. Always check tire pressure when the tires are cold because tire pressure increases with temperature.

To check the tire pressure, take the following steps:

1. Unscrew the inflation valve cap that is located on the rim of the tire.
2. Press and hold the gauge against the tire valve. Some air will escape as you begin and more will escape if you don't press the gauge in firmly.
3. A firm non-leaking push will activate the gauge.
4. Read the tire pressure on the gauge to know whether the tire pressure is low or high.
5. Adjust the tire pressures to the specified pressure. Refer to “Tires and wheels” in section 8.
6. Reinstall the inflation valve cap.

Engine compartment / 7-2
Maintenance services / 7-5
Owner maintenance / 7-7
Scheduled maintenance service / 7-9
Explanation of scheduled maintenance items / 7-41
Engine oil / 7-44
Engine coolant / 7-45
Brake/clutch fluid / 7-48
Washer fluid / 7-49
Fuel filter / 7-50
Air cleaner / 7-51
Climate control air filter / 7-53
Wiper blades 7-55
Battery / 7-58
Tires and wheels / 7-61
Fuses / 7-71

Maintenance 7

Light bulbs / 7-85
Appearance care / 7-99
Emission control system / 7-105

ENGINE COMPARTMENT

■ **Gasoline Engine (1.6L)**

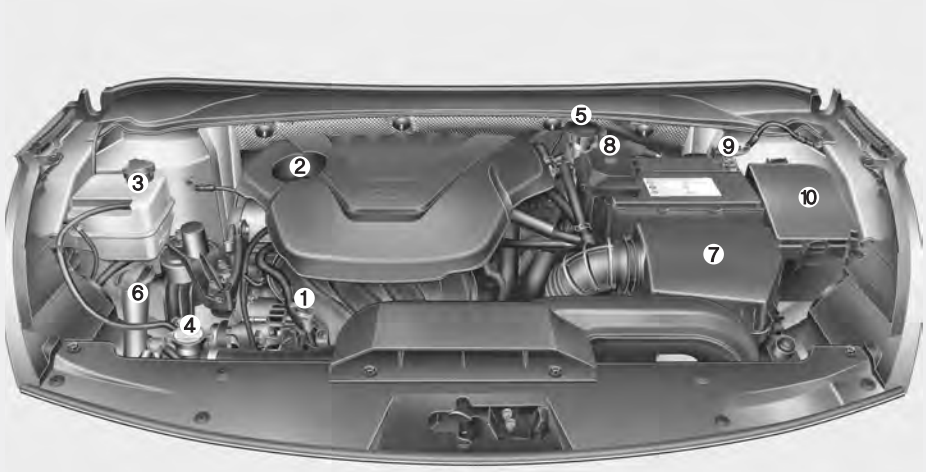

1. Engine oil dipstick
2. Engine oil filler cap
3. Engine coolant reservoir
4. Radiator cap
5. Brake/clutch* fluid reservoir
6. Windshield washer fluid reservoir
7. Air cleaner
8. Positive battery terminal
9. Negative battery terminal
10. Fuse box

* : if equipped

❊ The actual engine room in the vehicle may differ from the illustration.

OVF071002

■ **Gasoline Engine (2.0L)**

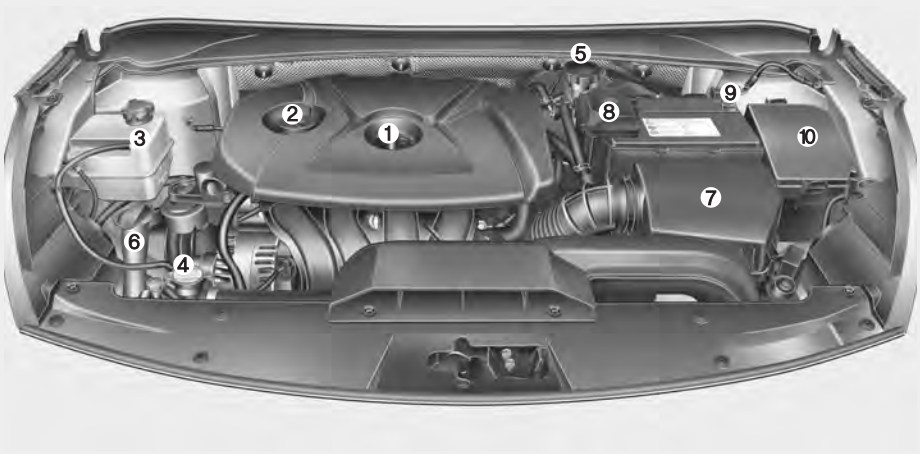

1. Engine oil dipstick
2. Engine oil filler cap
3. Engine coolant reservoir
4. Radiator cap
5. Brake/clutch* fluid reservoir
6. Windshield washer fluid reservoir
7. Air cleaner
8. Positive battery terminal
9. Negative battery terminal
10. Fuse box

* : if equipped

❊ The actual engine room in the vehicle may differ from the illustration.

OVF071001

■ **Diesel Engine (1.7L)**

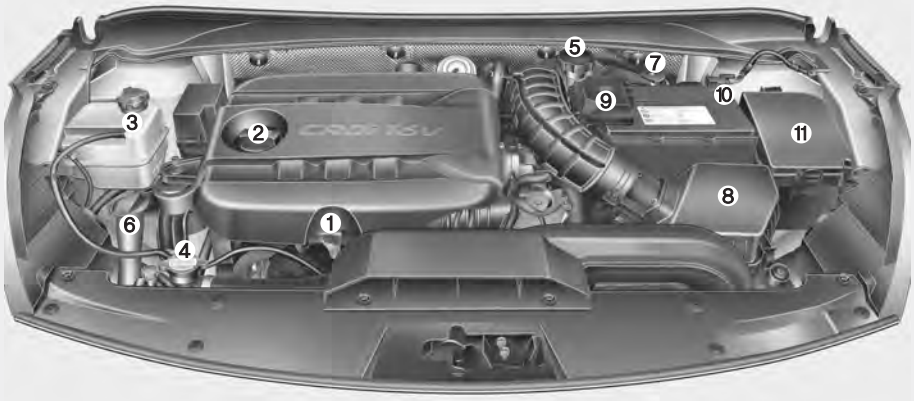

1. Engine oil dipstick
2. Engine oil filler cap
3. Engine coolant reservoir
4. Radiator cap
5. Brake/clutch* fluid reservoir
6. Windshield washer fluid reservoir
7. Fuel filter
8. Air cleaner
9. Positive battery terminal
10. Negative battery terminal
11. Fuse box

* : if equipped

❊ The actual engine room in the vehicle may differ from the illustration.

OVF071003

MAINTENANCE SERVICES

You should exercise the utmost care to prevent damage to your vehicle and injury to yourself whenever performing any maintenance or inspection procedures.

Should you have any doubts concerning the inspection or servicing of your vehicle, we strongly recommend that you have an authorized HYUNDAI dealer perform this work.

An authorized HYUNDAI dealer has factory-trained technicians and genuine HYUNDAI parts to service your vehicle properly. For expert advice and quality service, see an authorized HYUNDAI dealer.

Inadequate, incomplete or insufficient servicing may result in operational problems with your vehicle that could lead to vehicle damage, an accident, or personal injury.

Owner’s responsibility

✻ NOTICE

Maintenance Service and Record Retention are the owner's responsibility.

You should retain documents that show proper maintenance has been performed on your vehicle in accordance with the scheduled maintenance service charts shown on the following pages. You need this information to establish your compliance with the servicing and maintenance requirements of your vehicle warranties.

Detailed warranty information is provided in your Service Passport.

Repairs and adjustments required as a result of improper maintenance or a lack of required maintenance are not covered.

We recommend you have your vehicle maintained and repaired by an authorized HYUNDAI dealer. An authorized HYUNDAI dealer meets HYUNDAI’s high service quality standards and receives technical support from HYUNDAI in order to provide you with a high level of service satisfaction.

Owner maintenance precautions

Improper or incomplete service may result in problems. This section gives instructions only for the maintenance items that are easy to perform.

As explained earlier in this section, several procedures can be done only by an authorized HYUNDAI dealer with special tools.

✻ NOTICE

Improper owner maintenance during the warranty period may affect warranty coverage. For details, read the separate Service Passport provided with the vehicle. If you're unsure about any servicing or maintenance procedure, have it done by an authorized HYUNDAI dealer.

⚠ WARNING - Maintenance work

- **Performing maintenance work on a vehicle can be dangerous. You can be seriously injured while performing some maintenance procedures. If you lack sufficient knowledge and experience or the proper tools and equipment to do the work, have it done by an authorized HYUNDAI dealer.**
- **Working under the hood with the engine running is dangerous. It becomes even more dangerous when you wear jewelry or loose clothing. These can become entangled in moving parts and result in injury. Therefore, if you must run the engine while working under the hood, make certain that you remove all jewelry (especially rings, bracelets, watches, and necklaces) and all neckties, scarves, and similar loose clothing before getting near the engine or cooling fans.**

Engine compartment precautions (Diesel engine)

- The injector operates at high voltage (maximum 200v). Therefore, the following accidents may occur.
  - Direct contact with the injector or injector wiring may cause electric shock or damage your muscle or nerve system.
  - The electromagnetic wave from the operating injector may cause the artificial heart pacemaker to malfunction.
- Follow the safety tips provided below, when you are checking the engine room while the engine is running.
  - Do not touch the injector, injector wirings, and the engine computer while the engine is running.
  - Do not remove the injector connector while the engine is running.
  - People using pacemakers must not go near the engine while the engine is starting or running.

⚠ WARNING - Diesel Engine

Never work on injection system with engine running or within 30 seconds after shutting off engine. High-pressure pump, rail, injectors and high-pressure pipes are subject to high pressure even after the engine stopped. The fuel jet produced by fuel leaks may cause serious injury, if it touches the body. People using pacemakers should not move than 30cm closer to the ECU or wiring harness within the engine room while engine is running, since the high currents in the electronic engine control system produce considerable magnetic fields.

OWNER MAINTENANCE

The following lists are vehicle checks and inspections that should be performed by the owner or an authorized HYUNDAI dealer at the frequencies indicated to help ensure safe, dependable operation of your vehicle.

Any adverse conditions should be brought to the attention of your dealer as soon as possible.

These Owner Maintenance Checks are generally not covered by warranties and you may be charged for labor, parts and lubricants used.

Owner maintenance schedule

When you stop for fuel:

- Check the engine oil level.
- Check coolant level in coolant reservoir.
- Check the windshield washer fluid level.
- Look for low or under-inflated tires.

⚠ WARNING

Be careful when checking your engine coolant level when the engine is hot. Scalding hot coolant and steam may blow out under pressure. This could cause burns or other serious injury.

While operating your vehicle:

- Note any changes in the sound of the exhaust or any smell of exhaust fumes in the vehicle.
- Check for vibrations in the steering wheel. Notice any increased steering effort or looseness in the steering wheel, or change in its straight-ahead position.
- Notice if your vehicle constantly turns slightly or “pulls” to one side when traveling on smooth, level road.
- When stopping, listen and check for unusual sounds, pulling to one side, increased brake pedal travel or “hard-to-push” brake pedal.
- If any slipping or changes in the operation of your transaxle occurs, check the transaxle fluid level.
- Check manual transaxle operation, including clutch operation.
- Check automatic transaxle P (Park) function.
- Check parking brake.
- Check for fluid leaks under your vehicle (water dripping from the air conditioning system during or after use is normal).

At least monthly:

- Check coolant level in the engine coolant reservoir.
- Check the operation of all exterior lights, including the stoplights, turn signals and hazard warning flashers.
- Check the inflation pressures of all tires including the spare.

At least twice a year (i.e., every Spring and Fall) :

- Check radiator, heater and air conditioning hoses for leaks or damage.
- Check windshield washer spray and wiper operation. Clean wiper blades with clean cloth dampened with washer fluid.
- Check headlight alignment.
- Check muffler, exhaust pipes, shields and clamps.
- Check the lap/shoulder belts for wear and function.
- Check for worn tires and loose wheel lug nuts.

At least once a year :

- Clean body and door drain holes.
- Lubricate door hinges and checks, and hood hinges.
- Lubricate door and hood locks and latches.
- Lubricate door rubber weatherstrips.
- Check the air conditioning system.
- Check the power steering fluid level.
- Inspect and lubricate automatic transaxle linkage and controls.
- Clean battery and terminals.
- Check the brake (and clutch) fluid level.

SCHEDULED MAINTENANCE SERVICE

Follow Normal Maintenance Schedule if the vehicle is usually operated where none of the following conditions apply. If any of the following conditions apply, follow Maintenance Under Severe Usage Conditions.

- Repeated short distance driving.
- Driving in dusty conditions or sandy areas.
- Extensive use of brakes.
- Driving in areas where salt or other corrosive materials are being used.
- Driving on rough or muddy roads.
- Driving in mountainous areas.
- Extended periods of idling or low speed operation.
- Driving for a prolonged period in cold temperatures and/or extremely humid climates.
- More than 50% driving in heavy city traffic during hot weather above 32°C (90°F).

If your vehicle is operated under the above conditions, you should inspect, replace or refill more frequently than the following Normal Maintenance Schedule. After the periods or distance shown in the chart, continue to follow the prescribed maintenance intervals.

NORMAL MAINTENANCE SCHEDULE - FOR GASOLINE ENGINE (1.6L/2.0L) - GDI/DIESEL ENGINE (1.7L) (ONLY EUROPE)

The following maintenance services must be performed to ensure good emission control and performance. Keep receipts for all vehicle emission services to protect your warranty. Where both mileage and time are shown, the frequency of service is determined by whichever occurs first.

*1 : Check the engine oil level and leak every 500 km (350 miles) or before starting a long trip.

*2 : This maintenance schedule depends on fuel quality. It is applicable only when using a qualified fuel <"EN590 or equivalent">. If the diesel fuel specifications don't meet the EN590, it must be replaced according to the severe maintenance schedule.

*3 : If the recommended oil is not available, replace engine oil and engine oil filter every 20,000 km or 12 months.

*4 : If the recommended oil and oil filter are not available, replace engine oil and engine oil filter every 15,000 km or 12 months.

*5 : The engine oil level should be checked regularly and maintained properly. Operating with an insufficient amount of oil can damage the engine, and such damage is not covered by warranty.

*6 : This maintenance schedule depends on fuel quality. It is applicable only when using a qualified fuel <"EN590 or equivalent">. If the diesel fuel specifications don't meet the EN590, it must be replaced more frequently. If there are some important safety matters like fuel flow restriction, surging, loss of power, hard starting problem etc., replace the fuel filter immediately regardless of maintenance schedule and consult an authorized HYUNDAI dealer for details.

*7 : The fuel filter is considered to be maintenance free but periodic inspection is recommended for this maintenance schedule depends on fuel quality. If there are some important matters like fuel flow restriction, surging, loss of power, hard starting problem etc, replace the fuel filter immediately regardless of maintenance schedule and consult an authorized HYUNDAI dealer for details.

*8 : Manual transaxle fluid should be changed anytime they have been submerged in water.

*9 : Inspect drive belt tensioner, idler and alternator pulley and if necessary correct or replace.

*10 : When adding coolant, use only deionized water or soft water for your vehicle and never mix hard water in the coolant filled at the factory. An improper coolant mixture can result in serious malfunction or engine damage.

*11 : Inspect for excessive valve noise and/or engine vibration and adjust if necessary. An authorized HYUNDAI dealer should perform the operation.

*12 : If good quality gasolines that meet Europe Fuel standards (EN228) or equivalents including fuel additives is not available, one bottle of additive is recommended. Additives are available from your authorized HYUNDAI dealer along with information on how to use them. Do not mix other additives.

*13 : Driving in outer temperature over 40 °C (104 °F) or driving over 170 km/h (106 mile/h) must conform the severe driving condition.

NORMAL MAINTENANCE SCHEDULE - FOR GASOLINE ENGINE (1.6L/2.0L) - GDI/DIESEL ENGINE (1.7L) (ONLY EUROPE) (CONT.)

30,000 km (20,000 miles) or 24 months
❑ Inspect air cleaner filter
❑ Inspect air conditioner refrigerant/compressor (if equipped)
❑ Inspect battery condition
❑ Inspect brake lines, hoses and connections (30,000 km (20,000 miles) or 12 months)
❑ Inspect disc brakes and pads (30,000 km (20,000 miles) or 12 months)
❑ Inspect drive shafts and boots
❑ Inspect exhaust system
❑ Inspect front suspension ball joints
❑ Inspect fuel lines, fuel hoses and connections (Diesel)
❑ Inspect parking brake (30,000 km (20,000 miles) or 12 months)
❑ Inspect steering gear rack, linkage and boots
❑ Inspect tire (pressure & tread wear) (30,000 km (20,000 miles) or 12 months)
❑ Replace brake/clutch(if equipped) fluid
(Continued)

(Continued)

- ❑ Replace climate control air filter (if equipped)
- ❑ Replace engine oil and filter (Diesel) *1 *2 *3 *5
- ❑ Replace engine oil and filter (Gasoline) *1 *4 *5 *13
- ❑ Replace fuel filter cartridge (Diesel) *6
- ❑ Add fuel additives (Gasoline) *12 (Every 15,000 km or 12months)

NORMAL MAINTENANCE SCHEDULE - FOR GASOLINE ENGINE (1.6L/2.0L) - GDI/DIESEL ENGINE (1.7L) (ONLY EUROPE) (CONT.)

60,000 km (40,000 miles) or 48 months

- ❑ Inspect air conditioner refrigerant/compressor (if equipped)
- ❑ Inspect battery condition
- ❑ Inspect brake lines, hoses and connections (60,000 km (40,000 miles) or 24 months)
- ❑ Inspect disc brakes and pads (60,000 km (40,000 miles) or 24 months)
- ❑ Inspect drive shafts and boots
- ❑ Inspect exhaust system
- ❑ Inspect front suspension ball joints
- ❑ Inspect fuel filter *7
- ❑ Inspect fuel lines, fuel hoses and connections (Gasoline, Diesel)
- ❑ Inspect fuel tank air filter
- ❑ Inspect manual transaxle fluid (if equipped) *8
- ❑ Inspect parking brake (60,000 km (40,000 miles) or 24 months)
- ❑ Inspect steering gear rack, linkage and boots
- ❑ Inspect tire (pressure & tread wear) (60,000 km (40,000 miles) or 24 months)
- ❑ Inspect vapor hose and fuel filler cap

(Continued)

(Continued)

- ❑ Replace air cleaner filter
- ❑ Replace brake/clutch(if equipped) fluid
- ❑ Replace climate control air filter (if equipped)
- ❑ Replace engine oil and filter (Diesel) *1 *2 *3 *5
- ❑ Replace engine oil and filter (Gasoline) *1 *4 *5 *13
- ❑ Replace fuel filter cartridge (Diesel) *6
- ❑ Replace spark plugs (Nickel) (Gasoline)
- ❑ Inspect cooling system (At first, 60,000 km (40,000 miles) or 48months after that, every 30,000 km (20,000 miles) or 24months)
- ❑ Add fuel additives (Gasoline) *12 (Every 15,000 km or 12months)

NORMAL MAINTENANCE SCHEDULE - FOR GASOLINE ENGINE (1.6L/2.0L) - GDI/DIESEL ENGINE (1.7L) (ONLY EUROPE) (CONT.)

90,000 km (60,000 miles) or 72 months
❑ Inspect air cleaner filter
❑ Inspect air conditioner refrigerant/compressor (if equipped)
❑ Inspect battery condition
❑ Inspect brake lines, hoses and connections (90,000 km (60,000 miles) or 36 months)
❑ Inspect disc brakes and pads (90,000 km (60,000 miles) or 36 months)
❑ Inspect drive shafts and boots
❑ Inspect exhaust system
❑ Inspect front suspension ball joints
❑ Inspect fuel lines, fuel hoses and connections (Diesel)
❑ Inspect parking brake (90,000 km (60,000 miles) or 36 months)
❑ Inspect steering gear rack, linkage and boots
❑ Inspect tire (pressure & tread wear) (90,000 km (60,000 miles) or 36 months)
❑ Inspect valve clearance (Gasoline 1.6) *11
(Continued)

(Continued)

- ❑ Replace brake/clutch(if equipped) fluid
- ❑ Replace climate control air filter (if equipped)
- ❑ Replace engine oil and filter (Diesel) *1 *2 *3 *5
- ❑ Replace engine oil and filter (Gasoline) *1 *4 *5 *13
- ❑ Replace fuel filter cartridge (Diesel) *6
- ❑ Inspect cooling system
  (At first, 60,000 km (40,000 miles) or 48months
  after that, every 30,000 km (20,000 miles) or 24months)
- ❑ Inspect drive belt (Diesel) *9
  (At first, 90,000 km (60,000 miles) or 48months
  after that, every 30,000 km (20,000 miles) or 24months)
- ❑ Inspect drive belt (Gasoline) *9
  (At first, 90,000 km (60,000 miles) or 72months
  after that, every 30,000 km (20,000 miles) or 24months)
- ❑ Add fuel additives (Gasoline) *12
  (Every 15,000 km or 12months)

NORMAL MAINTENANCE SCHEDULE - FOR GASOLINE ENGINE (1.6L/2.0L) - GDI/DIESEL ENGINE (1.7L) (ONLY EUROPE) (CONT.)

120,000 km (80,000 miles) or 96 months

- ❑ Inspect air conditioner refrigerant/compressor (if equipped)
- ❑ Inspect battery condition
- ❑ Inspect brake lines, hoses and connections (120,000 km (80,000 miles) or 48 months)
- ❑ Inspect disc brakes and pads (120,000 km (80,000 miles) or 48 months)
- ❑ Inspect drive shafts and boots
- ❑ Inspect exhaust system
- ❑ Inspect front suspension ball joints
- ❑ Inspect fuel filter (Gasoline) *7
- ❑ Inspect fuel lines, fuel hoses and connections (Gasoline, Diesel)
- ❑ Inspect fuel tank air filter
- ❑ Inspect manual transaxle fluid (if equipped) *8
- ❑ Inspect parking brake (120,000 km (80,000 miles) or 48 months)
- ❑ Inspect steering gear rack, linkage and boots
- ❑ Inspect tire (pressure & tread wear) (120,000 km (80,000 miles) or 48 months)
- ❑ Inspect vapor hose and fuel filler cap

(Continued)

(Continued)

- ❑ Replace air cleaner filter
- ❑ Replace brake/clutch (if equipped) fluid
- ❑ Replace climate control air filter (if equipped)
- ❑ Replace engine oil and filter (Diesel) *1 *2 *3 *5
- ❑ Replace engine oil and filter (Gasoline) *1 *4 *5 *13
- ❑ Replace fuel filter cartridge (Diesel) *6
- ❑ Replace spark plugs (Nickel) (Gasoline)
- ❑ Inspect cooling system (At first, 60,000 km (40,000 miles) or 48months after that, every 30,000 km (20,000 miles) or 24months)
- ❑ Inspect drive belt (Diesel) *9 (At first, 90,000 km (60,000 miles) or 48months after that, every 30,000 km (20,000 miles) or 24months)
- ❑ Inspect drive belt (Gasoline) *9 (At first, 90,000 km (60,000 miles) or 72months after that, every 30,000 km (20,000 miles) or 24months)
- ❑ Add fuel additives (Gasoline) *12 (Every 15,000 km or 12months)

NORMAL MAINTENANCE SCHEDULE - FOR GASOLINE ENGINE (1.6L/2.0L) - GDI/DIESEL ENGINE (1.7L) (ONLY EUROPE) (CONT.)

150,000 km (100,000 miles) or 120 months

- ❑ Inspect air cleaner filter
- ❑ Inspect air conditioner refrigerant/compressor (if equipped)
- ❑ Inspect battery condition
- ❑ Inspect brake lines, hoses and connections (150,000 km (100,000 miles) or 60 months)
- ❑ Inspect disc brakes and pads (150,000 km (100,000 miles) or 60 months)
- ❑ Inspect drive shafts and boots
- ❑ Inspect exhaust system
- ❑ Inspect front suspension ball joints
- ❑ Inspect fuel lines, fuel hoses and connections (Diesel)
- ❑ Inspect parking brake (150,000 km (100,000 miles) or 60 months)
- ❑ Inspect steering gear rack, linkage and boots
- ❑ Inspect tire (pressure & tread wear) (150,000 km (100,000 miles) or 60 months)

(Continued)

(Continued)

- ❑ Replace brake/clutch(if equipped) fluid
- ❑ Replace climate control air filter (if equipped)
- ❑ Replace engine oil and filter (Diesel) *1 *2 *3 *5
- ❑ Replace engine oil and filter (Gasoline) *1 *4 *5 *13
- ❑ Replace fuel filter cartridge (Diesel) *6
- ❑ Replace spark plugs (Iridium) (Gasoline)
- ❑ Inspect cooling system (At first, 60,000 km (40,000 miles) or 48months after that, every 30,000 km (20,000 miles) or 24months)
- ❑ Inspect drive belt (Diesel) *9 (At first, 90,000 km (60,000 miles) or 48months after that, every 30,000 km (20,000 miles) or 24months)
- ❑ Inspect drive belt (Gasoline) *9 (At first, 90,000 km (60,000 miles) or 72months after that, every 30,000 km (20,000 miles) or 24months)
- ❑ Add fuel additives (Gasoline) *12 (Every 15,000 km or 12months)

NORMAL MAINTENANCE SCHEDULE - FOR GASOLINE ENGINE (1.6L/2.0L) - GDI/DIESEL ENGINE (1.7L) (ONLY EUROPE) (CONT.)

180,000 km (120,000 miles) or 144 months
❑ Inspect air conditioner refrigerant/compressor (if equipped)
❑ Inspect battery condition
❑ Inspect brake lines, hoses and connections (180,000 km (120,000 miles) or 72 months)
❑ Inspect disc brakes and pads (180,000 km (120,000 miles) or 72 months)
❑ Inspect drive shafts and boots
❑ Inspect exhaust system
❑ Inspect front suspension ball joints
❑ Inspect fuel filter (Gasoline) *7
❑ Inspect fuel lines, fuel hoses and connections (Gasoline, Diesel)
❑ Inspect fuel tank air filter
❑ Inspect manual transaxle fluid (if equipped) *8
❑ Inspect parking brake (180,000 km (120,000 miles) or 72 months)
❑ Inspect steering gear rack, linkage and boots
❑ Inspect tire (pressure & tread wear) (180,000 km (120,000 miles) or 72 months)
❑ Inspect valve clearance (Gasoline 1.6) *11
❑ Inspect vapor hose and fuel filler cap
(Continued)

(Continued)

- ❑ Replace air cleaner filter
- ❑ Replace brake/clutch(if equipped) fluid
- ❑ Replace climate control air filter (if equipped)
- ❑ Replace engine oil and filter (Diesel) *1 *2 *3 *5
- ❑ Replace engine oil and filter (Gasoline) *1 *4 *5 *13
- ❑ Replace fuel filter cartridge (Diesel) *6
- ❑ Replace spark plugs (Nickel) (Gasoline)
- ❑ Inspect cooling system (At first, 60,000 km (40,000 miles) or 48months after that, every 30,000 km (20,000 miles) or 24months)
- ❑ Inspect drive belt (Diesel) *9 (At first, 90,000 km (60,000 miles) or 48months after that, every 30,000 km (20,000 miles) or 24months)
- ❑ Inspect drive belt (Gasoline) *9 (At first, 90,000 km (60,000 miles) or 72months after that, every 30,000 km (20,000 miles) or 24months)
- ❑ Add fuel additives (Gasoline) *12 (Every 15,000 km or 12months)

NORMAL MAINTENANCE SCHEDULE - FOR GASOLINE ENGINE (1.6L/2.0L) - GDI/DIESEL ENGINE (1.7L) (ONLY EUROPE) (CONT.)

210,000 km (140,000 miles) or 168 months

- ❑ Inspect air cleaner filter
- ❑ Inspect air conditioner refrigerant/compressor (if equipped)
- ❑ Inspect battery condition
- ❑ Inspect brake lines, hoses and connections (210,000 km (140,000 miles) or 84 months)
- ❑ Inspect disc brakes and pads (210,000 km (140,000 miles) or 84 months)
- ❑ Inspect drive shafts and boots
- ❑ Inspect exhaust system
- ❑ Inspect front suspension ball joints
- ❑ Inspect fuel lines, fuel hoses and connections (Diesel)
- ❑ Inspect parking brake (210,000 km (140,000 miles) or 84 months)
- ❑ Inspect steering gear rack, linkage and boots
- ❑ Inspect tire (pressure & tread wear) (210,000 km (140,000 miles) or 84 months)
- ❑ Replace brake/clutch(if equipped) fluid
- ❑ Replace climate control air filter (if equipped)
- ❑ Replace engine oil and filter (Diesel) *1 *2 *3 *5
- ❑ Replace engine oil and filter (Gasoline) *1 *4 *5 *13

(Continued)

(Continued)

- ❑ Replace fuel filter cartridge (Diesel) *6
- ❑ Inspect cooling system (At first, 60,000 km (40,000 miles) or 48months after that, every 30,000 km (20,000 miles) or 24months)
- ❑ Inspect drive belt (Diesel) *9 (At first, 90,000 km (60,000 miles) or 48months after that, every 30,000 km (20,000 miles) or 24months)
- ❑ Inspect drive belt (Gasoline) *9 (At first, 90,000 km (60,000 miles) or 72months after that, every 30,000 km (20,000 miles) or 24months)
- ❑ Replace coolant *10 (At first, 210,000 km (120,000 miles) or 120 months after that, every 30,000 km (20,000 miles) or 24months)
- ❑ Add fuel additives (Gasoline) *12 (Every 15,000 km or 12months)

NORMAL MAINTENANCE SCHEDULE - FOR GASOLINE ENGINE (1.6L/2.0L) - GDI/DIESEL ENGINE (1.7L) (ONLY EUROPE) (CONT.)

240,000 km (160,000 miles) or 192 months

- ❑ Inspect air conditioner refrigerant/compressor (if equipped)
- ❑ Inspect battery condition
- ❑ Inspect brake lines, hoses and connections (240,000 km (160,000 miles) or 96 months)
- ❑ Inspect disc brakes and pads (240,000 km (160,000 miles) or 96 months)
- ❑ Inspect drive shafts and boots
- ❑ Inspect exhaust system
- ❑ Inspect front suspension ball joints
- ❑ Inspect fuel filter (Gasoline) *7
- ❑ Inspect fuel lines, fuel hoses and connections (Gasoline, Diesel)
- ❑ Inspect fuel tank air filter
- ❑ Inspect manual transaxle fluid (if equipped) *8
- ❑ Inspect parking brake (240,000 km (160,000 miles) or 96 months)
- ❑ Inspect steering gear rack, linkage and boots
- ❑ Inspect tire (pressure & tread wear) (240,000 km (160,000 miles) or 96 months)
- ❑ Inspect vapor hose and fuel filler cap

(Continued)

(Continued)

- ❑ Replace air cleaner filter
- ❑ Replace brake/clutch(if equipped) fluid
- ❑ Replace climate control air filter (if equipped)
- ❑ Replace engine oil and filter (Diesel) *1 *2 *3 *5
- ❑ Replace engine oil and filter (Gasoline) *1 *4 *5 *13
- ❑ Replace fuel filter cartridge (Diesel) *6
- ❑ Replace spark plugs (Nickel) (Gasoline)
- ❑ Inspect cooling system (At first, 60,000 km (40,000 miles) or 48months after that, every 30,000 km (20,000 miles) or 24months)
- ❑ Inspect drive belt (Diesel) *9 (At first, 90,000 km (60,000 miles) or 48months after that, every 30,000 km (20,000 miles) or 24months)
- ❑ Inspect drive belt (Gasoline) *9 (At first, 90,000 km (60,000 miles) or 72months after that, every 30,000 km (20,000 miles) or 24months)
- ❑ Replace coolant *10 (At first, 210,000 km (120,000 miles) or 120 months after that, every 30,000 km (20,000 miles) or 24months)
- ❑ Add fuel additives (Gasoline) *12 (Every 15,000 km or 12months)

No check, No service required

- ❑ Automatic transaxle fluid

MAINTENANCE UNDER SEVERE USAGE CONDITIONS

- FOR GASOLINE ENGINE (1.6L/2.0L) - GDI/DIESEL ENGINE (1.7L) (ONLY EUROPE) (CONT.)

The following items must be serviced more frequently on cars mainly used under severe driving conditions.

Refer to the chart below for the appropriate maintenance intervals.

R : Replace I : Inspect and if necessary, adjust, correct, clean or replace

MAINTENANCE ITEM		MAINTENANCE OPERATION	MAINTENANCE INTERVALS	DRIVING CONDITION
Engine oil and engine oil filter	Gasoline *1	R	Every 15,000 km (10,000 miles) or 12 months	A, B, C, D, E, F, G, H, I, K, L
	Diesel *2	R	Every 15,000 km (10,000 miles) or 12 months	A, B, C, F, G, H, I, J, K, L
Air cleaner filter		R	Replace more frequently depending on the condition	C, E
Spark plug	Gasoline	R	Replace more frequently depending on the condition	A, B, H, I, L
Manual transaxle fluid (if equipped)		R	Every 120,000 km (80,000 miles)	C, D, E, G, H, I, K
Automatic transaxle fluid (if equipped)		R	Every 90,000 km (60,000 miles)	A, C, D, E, F, G, H, I, K
Steering gear rack, linkage and boots		I	Inspect more frequently depending on the condition	C, D, E, F, G
Front suspension ball joints		I	Inspect more frequently depending on the condition	C, D, E, F, G

*1 : If the recommended oil and oil filter are not available, replace engine oil and engine oil filter every 7,500 km or 6 months.

*2 : If the recommended oil is not available, replace engine oil and engine oil filter every 10,000 km or 6 months.

MAINTENANCE ITEM	MAINTENANCE OPERATION	MAINTENANCE INTERVALS	DRIVING CONDITION
Disc brakes and pads, calipers and rotors	I	Inspect more frequently depending on the condition	C, D, E, G, H
Parking brake	I	Inspect more frequently depending on the condition	C, D, G, H
Drive shaft and boots	I	Inspect more frequently depending on the condition	C, D, E, F, G, H, I, J, K
Climate control air filter (if equipped)	R	Replace more frequently depending on the condition	C, E, G

SEVERE DRIVING CONDITIONS

A : Repeatedly driving short distance of less than 8 km (5 miles) in normal temperature or less than 16 km (10 miles) in freezing temperature.

B : Extensive engine idling or low speed driving for long distances.

C : Driving on rough, dusty, muddy, unpaved, graveled or salt-spread roads.

D : Driving in areas using salt or other corrosive materials or in very cold weather

E : Driving in sandy areas

F : More than 50 % driving in heavy city traffic during hot weather above 32 °C (90 °F)

G : Driving on uphill, downhill, or mountain roads.

H : Towing a trailer or using a camper on roof rack.

I : Driving for patrol car, taxi, commercial car or vehicle towing.

J : Driving in very cold weather.

K : Driving over 170 km/h (106 mile/h).

L : Frequently driving in stop-and-go conditions.

NORMAL MAINTENANCE SCHEDULE - FOR GASOLINE ENGINE (2.0L) - MPI

The following maintenance services must be performed to ensure good emission control and performance. Keep receipts for all vehicle emission services to protect your warranty. Where both mileage and time are shown, the frequency of service is determined by whichever occurs first.

*1 : Inspect drive belt tensioner, idler and alternator pulley and if necessary correct or replace.

*2 : Check the engine oil level and leak every 500 km (350 miles) or before starting a long trip.

*3 : Driving in outer temperature over 40 °C (104 °F) or driving over 170 km/h (106 mile/h) must conform the severe driving condition.

*4 : If good quality gasolines that meet Europe Fuel standards (EN228) or equivalents including fuel additives is not available, one bottle of additive is recommended. Additives are available from your authorized HYUNDAI dealer along with information on how to use them. Do not mix other additives

*5 : For your convenience, it can be replaced prior to it's interval when you do maintenance of other items.

*6 : The engine oil level should be checked regularly and maintained properly. Operating with an insufficient amount of oil can damage the engine, and such damage is not covered by warranty.

*7 : If the recommended oil and oil filter are not available, replace engine oil and engine oil filter every 7,500 km or 6 months.

*8 : The fuel filter is considered to be maintenance free but periodic inspection is recommended for this maintenance schedule depends on fuel quality. If there are some important matters like fuel flow restriction, surging, loss of power, hard starting problem etc, replace the fuel filter immediately regardless of maintenance schedule and consult an authorized HYUNDAI dealer for details.

*9 : When adding coolant, use only deionized water or soft water for your vehicle and never mix hard water in the coolant filled at the factory. An improper coolant mixture can result in serious malfunction or engine damage.

*10 : Manual transaxle fluid should be changed anytime they have been submerged in water.

NORMAL MAINTENANCE SCHEDULE - FOR GASOLINE ENGINE (2.0L) - MPI (CONT.)

15,000 km (10,000 miles) or 12months

- ❑ Add fuel additives - For Europe *4
- ❑ Inspect air cleaner filter - Except China, Middle East
- ❑ Inspect air conditioner refrigerant/compressor (if equipped)
- ❑ Inspect battery condition
- ❑ Inspect brake lines, hoses and connections
- ❑ Inspect brake/clutch (if equipped) fluid
- ❑ Inspect disc brakes and pads
- ❑ Inspect drive shafts and boots
- ❑ Inspect exhaust system
- ❑ Inspect front suspension ball joints
- ❑ Inspect parking brake
- ❑ Inspect steering gear rack, linkage and boots
- ❑ Inspect tire (pressure & tread wear)
- ❑ Replace air cleaner filter - For Middle East
- ❑ Replace climate control air filter (if equipped)

(Continued)

(Continued)

- ❑ Replace engine oil and filter
  - Except Middle East, Brazil, Libya *2 *3 *6 *7
- ❑ Replace engine oil and filter
  - For Middle East, Brazil, Libya *2 *3 *6 *7
  (Every 10,000 km (6,500 miles) or 12months)
- ❑ Add fuel additives - Except Europe *4
  (Every 5,000 km or 6 months)

NORMAL MAINTENANCE SCHEDULE - FOR GASOLINE ENGINE (2.0L) - MPI (CONT.)

30,000 km (20,000 miles) or 24months

- ❑ Add fuel additives - For Europe *4
- ❑ Inspect air cleaner filter - Except China, Middle East
- ❑ Inspect air conditioner refrigerant/compressor (if equipped)
- ❑ Inspect battery condition
- ❑ Inspect brake lines, hoses and connections
- ❑ Inspect brake/clutch(if equipped) fluid - Except Europe
- ❑ Inspect disc brakes and pads
- ❑ Inspect drive belt *1
- ❑ Inspect drive shafts and boots
- ❑ Inspect exhaust system
- ❑ Inspect front suspension ball joints
- ❑ Inspect fuel filter *8
- ❑ Inspect fuel tank air filter - Except Europe
- ❑ Inspect parking brake
- ❑ Inspect steering gear rack, linkage and boots
- ❑ Inspect tire (pressure & tread wear)
- ❑ Replace air cleaner filter - For China, Middle East
- ❑ Replace brake/clutch (if equipped) fluid - For Europe
- ❑ Replace climate control air filter (if equipped)

(Continued)

(Continued)

- ❑ Replace engine oil and filter
  - Except Middle East, Brazil, Libya *2 *3 *6 *7
- ❑ Replace engine oil and filter
  - For Middle East, Brazil, Libya *2 *3 *6 *7
  (Every 10,000 km (6,500 miles) or 12months)
- ❑ Replace spark plugs - Except China
  (Every 40,000 km (25,000 miles) *5)
- ❑ Add fuel additives - Except Europe *4
  (Every 5,000 km or 6 months)

NORMAL MAINTENANCE SCHEDULE - FOR GASOLINE ENGINE (2.0L) - MPI (CONT.)

45,000 km (30,000 miles) or 36months
❑ Add fuel additives - For Europe *4
❑ Inspect air conditioner refrigerant/compressor (if equipped)
❑ Inspect battery condition
❑ Inspect brake lines, hoses and connections
❑ Inspect brake/clutch(if equipped) fluid
❑ Inspect disc brakes and pads
❑ Inspect drive shafts and boots
❑ Inspect exhaust system
❑ Inspect front suspension ball joints
❑ Inspect parking brake
❑ Inspect steering gear rack, linkage and boots
❑ Inspect tire (pressure & tread wear)
❑ Replace air cleaner filter
❑ Replace climate control air filter (if equipped)
(Continued)

(Continued)

❑ Replace engine oil and filter
- Except Middle East, Brazil, Libya *2 *3 *6 *7

❑ Replace engine oil and filter
- For Middle East, Brazil, Libya *2 *3 *6 *7
(Every 10,000 km (6,500 miles) or 12months)

❑ Add fuel additives - Except Europe *4
(Every 5,000 km or 6 months)

NORMAL MAINTENANCE SCHEDULE - FOR GASOLINE ENGINE (2.0L) - MPI (CONT.)

60,000 km (40,000 miles) or 48months

- ❑ Add fuel additives - For Europe *4
- ❑ Inspect air cleaner filter - Except China, Middle East
- ❑ Inspect air conditioner refrigerant/compressor (if equipped)
- ❑ Inspect battery condition
- ❑ Inspect brake lines, hoses and connections
- ❑ Inspect brake/clutch (if equipped) fluid - Except Europe
- ❑ Inspect disc brakes and pads
- ❑ Inspect drive belt *1
- ❑ Inspect drive shafts and boots
- ❑ Inspect exhaust system
- ❑ Inspect front suspension ball joints
- ❑ Inspect fuel lines, hoses and connections
- ❑ Inspect fuel tank air filter - For Europe
- ❑ Inspect parking brake
- ❑ Inspect steering gear rack, linkage and boots
- ❑ Inspect tire (pressure & tread wear)
- ❑ Inspect manual transaxle fluid (if equipped) *10
- ❑ Inspect vapor hose and fuel filler cap

(Continued)

(Continued)

- ❑ Replace air cleaner filter - For Middle East
- ❑ Replace brake/clutch (if equipped) fluid - For Europe
- ❑ Replace climate control air filter (if equipped)
- ❑ Replace engine oil and filter
  - Except Middle East, Brazil, Libya *2 *3 *6 *7
- ❑ Replace engine oil and filter
  - For Middle East, Brazil, Libya *2 *3 *6 *7
  (Every 10,000 km (6,500 miles) or 12months)
- ❑ Replace fuel filter *8
- ❑ Replace fuel tank air filter - Except Europe
- ❑ Inspect cooling system
  (At first, 60,000 km (40,000 miles) or 48months
  after that, every 30,000 km (20,000 miles) or 24months)
- ❑ Add fuel additives - Except Europe *4
  (Every 5,000 km or 6 months)

NORMAL MAINTENANCE SCHEDULE - FOR GASOLINE ENGINE (2.0L) - MPI (CONT.)

75,000 km (50,000 miles) or 60months

- ❑ Add fuel additives - For Europe *4
- ❑ Inspect air cleaner filter - Except China, Middle East
- ❑ Inspect air conditioner refrigerant/compressor (if equipped)
- ❑ Inspect battery condition
- ❑ Inspect brake lines, hoses and connections
- ❑ Inspect brake/clutch(if equipped) fluid
- ❑ Inspect disc brakes and pads
- ❑ Inspect drive shafts and boots
- ❑ Inspect exhaust system
- ❑ Inspect front suspension ball joints
- ❑ Inspect parking brake
- ❑ Inspect steering gear rack, linkage and boots
- ❑ Inspect tire (pressure & tread wear)
- ❑ Replace air cleaner filter - For China, Middle East
- ❑ Replace climate control air filter (if equipped)

(Continued)

(Continued)

- ❑ Replace engine oil and filter
  - Except Middle East, Brazil, Libya *2 *3 *6 *7
- ❑ Replace engine oil and filter
  - For Middle East, Brazil, Libya *2 *3 *6 *7
  (Every 10,000 km (6,500 miles) or 12months)
- ❑ Replace spark plugs - Except China
  (Every 40,000 km (25,000 miles) *5)
- ❑ Add fuel additives - Except Europe *4
  (Every 5,000 km or 6 months)

NORMAL MAINTENANCE SCHEDULE - FOR GASOLINE ENGINE (2.0L) - MPI (CONT.)

90,000 km (60,000 miles) or 72months

- ❑ Add fuel additives - For Europe *4
- ❑ Inspect air conditioner refrigerant/compressor (if equipped)
- ❑ Inspect battery condition
- ❑ Inspect brake lines, hoses and connections
- ❑ Inspect brake/clutch(if equipped) fluid - Except Europe
- ❑ Inspect disc brakes and pads
- ❑ Inspect drive belt *1
- ❑ Inspect drive shafts and boots
- ❑ Inspect exhaust system
- ❑ Inspect front suspension ball joints
- ❑ Inspect fuel filter *8
- ❑ Inspect fuel tank air filter - Except Europe
- ❑ Inspect parking brake
- ❑ Inspect steering gear rack, linkage and boots
- ❑ Inspect tire (pressure & tread wear)

(Continued)

(Continued)

- ❑ Replace air cleaner filter
- ❑ Replace brake/clutch (if equipped) fluid - For Europe
- ❑ Replace climate control air filter (if equipped)
- ❑ Replace engine oil and filter
  - Except Middle East, Brazil, Libya *2 *3 *6 *7
- ❑ Replace engine oil and filter
  - For Middle East, Brazil, Libya *2 *3 *6 *7
  (Every 10,000 km (6,500 miles) or 12months)
- ❑ Inspect cooling system
  (At first, 60,000 km (40,000 miles) or 48months
  after that, every 30,000 km (20,000 miles) or 24months)
- ❑ Add fuel additives - Except Europe *4
  (Every 5,000 km or 6 months)

NORMAL MAINTENANCE SCHEDULE - FOR GASOLINE ENGINE (2.0L) - MPI (CONT.)

105,000 km (70,000 miles) or 84months

- ❑ Add fuel additives - For Europe *4
- ❑ Inspect air cleaner filter - Except China, Middle East
- ❑ Inspect air conditioner refrigerant/compressor (if equipped)
- ❑ Inspect battery condition
- ❑ Inspect brake lines, hoses and connections
- ❑ Inspect brake/clutch(if equipped) fluid
- ❑ Inspect disc brakes and pads
- ❑ Inspect drive shafts and boots
- ❑ Inspect exhaust system
- ❑ Inspect front suspension ball joints
- ❑ Inspect parking brake
- ❑ Inspect steering gear rack, linkage and boots
- ❑ Inspect tire (pressure & tread wear)
- ❑ Replace air cleaner filter - For China, Middle East
- ❑ Replace climate control air filter (if equipped)

(Continued)

(Continued)

- ❑ Replace engine oil and filter
  - Except Middle East, Brazil, Libya *2 *3 *6 *7
- ❑ Replace engine oil and filter
  - For Middle East, Brazil, Libya *2 *3 *6 *7
  (Every 10,000 km (6,500 miles) or 12months)
- ❑ Add fuel additives - Except Europe *4
  (Every 5,000 km or 6 months)

NORMAL MAINTENANCE SCHEDULE - FOR GASOLINE ENGINE (2.0L) - MPI (CONT.)

120,000 km (80,000 miles) or 96months

- ❑ Add fuel additives - For Europe *4
- ❑ Inspect air cleaner filter - Except China, Middle East
- ❑ Inspect air conditioner refrigerant/compressor (if equipped)
- ❑ Inspect battery condition
- ❑ Inspect brake lines, hoses and connections
- ❑ Inspect brake/clutch(if equipped) fluid - Except Europe
- ❑ Inspect disc brakes and pads
- ❑ Inspect drive belt *1
- ❑ Inspect drive shafts and boots
- ❑ Inspect exhaust system
- ❑ Inspect front suspension ball joints
- ❑ Inspect fuel lines, hoses and connections
- ❑ Inspect fuel tank air filter - For Europe
- ❑ Inspect parking brake
- ❑ Inspect steering gear rack, linkage and boots
- ❑ Inspect tire (pressure & tread wear)
- ❑ Inspect manual transaxle fluid (if equipped) *10
- ❑ Inspect vapor hose and fuel filler cap
- ❑ Replace air cleaner filter - For China, Middle East
- ❑ Replace brake/clutch (if equipped) fluid - For Europe

(Continued)

(Continued)

- ❑ Replace climate control air filter (if equipped)
- ❑ Replace engine oil and filter
  - Except Middle East, Brazil, Libya *2 *3 *6 *7
- ❑ Replace engine oil and filter
  - For Middle East, Brazil, Libya *2 *3 *6 *7
  (Every 10,000 km (6,500 miles) or 12months)
- ❑ Replace fuel filter *8
- ❑ Replace fuel tank air filter - Except Europe
- ❑ Replace spark plugs - Except China
  (Every 40,000 km (25,000 miles) *5)
- ❑ Replace spark plugs - For China
  (Every 160,000 km *5)
- ❑ Replace coolant *9
  (At first, 210,000 km (120,000 miles) or 120months
  after that, every 30,000 km (20,000 miles) or 24months *5)
- ❑ Inspect cooling system
  (At first, 60,000 km (40,000 miles) or 48months
  after that, every 30,000 km (20,000 miles) or 24months)
- ❑ Add fuel additives - Except Europe *4
  (Every 5,000 km or 6 months)

No check, No service required

- ❑ Automatic transaxle fluid

MAINTENANCE UNDER SEVERE USAGE CONDITIONS - FOR GASOLINE ENGINE (2.0L) - MPI

The following items must be serviced more frequently on cars mainly used under severe driving conditions.
Refer to the chart below for the appropriate maintenance intervals.
R : Replace I : Inspect and if necessary, adjust, correct, clean or replace

Maintenance item		Maintenance operation	Maintenance intervals	Driving condition
Engine oil and engine oil filter	Except Middle East, Brazil, Libya	R	Every 7,500 km (5,000 miles) or 6 months	A, B, C, D, E, F, G, H, I, K, L
	For Middle East, Brazil, Libya	R	Every 5,000 km (3,000 miles) or 6 months	
Air cleaner filter		R	Replace more frequently depending on the condition	C, E
Spark plugs		R	Replace more frequently depending on the condition	A, B, H, I, L
Manual transaxle fluid (if equipped)		R	Every 120,000 km (80,000 miles)	C, D, E, G, H, I, K
Automatic transaxle fluid (if equipped)		R	Every 100,000 km (62,000 miles)	A, C, D, E, F, G, H, I, K
Steering gear rack, linkage and boots		I	Inspect more frequently depending on the condition	C, D, E, F, G
Front suspension ball joints		I	Inspect more frequently depending on the condition	C, D, E, F, G

Maintenance item	Maintenance operation	Maintenance intervals	Driving condition
Disc brakes and pads, calipers and rotors	I	Inspect more frequently depending on the condition	C, D, E, G, H
Parking brake	I	Inspect more frequently depending on the condition	C, D, G, H
Driveshaft and boots	I	Inspect more frequently depending on the condition	C, D, E, F, G, H, I, J, K
Climate control air filter (if equipped)	R	Replace more frequently depending on the condition	C, E, G

SEVERE DRIVING CONDITIONS

A : Repeatedly driving short distance of less than 8 km (5 miles) in normal temperature or less than 16 km (10 miles) in freezing temperature.

B : Extensive engine idling or low speed driving for long distances.

C : Driving on rough, dusty, muddy, unpaved, graveled or salt-spread roads.

D : Driving in areas using salt or other corrosive materials or in very cold weather

E : Driving in sandy areas

F : More than 50 % driving in heavy city traffic during hot weather above 32 °C (90 °F)

G : Driving on uphill, downhill, or mountain roads.

H : Towing a trailer or using a camper on roof rack.

I : Driving for patrol car, taxi, commercial car or vehicle towing.

J : Driving in very cold weather.

K : Driving over 170 km/h (106 mile/h).

L : Frequently driving in stop-and-go conditions.

NORMAL MAINTENANCE SCHEDULE - FOR DIESEL ENGINE (EXCEPT EUROPE)

The following maintenance services must be performed to ensure good emission control and performance. Keep receipts for all vehicle emission services to protect your warranty. Where both mileage and time are shown, the frequency of service is determined by whichever occurs first.

*1 : Check the engine oil level and leak every 500 km (350 miles) or before starting a long trip.

*2 : Driving in summer season temperature over 40 °C (104 °F - SAUDI, UAE, OMAN, KUWAIT, BAHRAIN, QATAR, IRAN, YEMEN ETC) or driving over 170 km/h (106 mile/h) must conform the severe driving condition.

*3 : This maintenance schedule depends on fuel quality. It is applicable only when using a qualified fuel <"EN590 or equivalent">. If the diesel fuel specifications don't meet the EN590, it must be replaced according to the severe maintenance schedule.

If there are some important safety matters like fuel flow restriction, surging, loss of power, hard starting problem etc., replace the fuel filter immediately regardless of maintenance schedule and consult an authorized HYUNDAI dealer for details

*4 : The engine oil level should be checked regularly and maintained properly. Operating with an insufficient amount of oil can damage the engine, and such damage is not covered by warranty.

*5 : Inspect for excessive valve noise and/or engine vibration and adjust if necessary. An authorized HYUNDAI dealer should perform the operation.

*6 : Manual transaxle should be changed anytime they have been submerged in water.

*7 : The fuel filter is considered to be maintenance free but periodic inspection is recommended for this maintenance schedule depends on fuel quality. If there are some important matters like fuel flow restriction, surging, loss of power, hard starting problem etc, replace the fuel filter immediately regardless of maintenance schedule and consult an authorized HYUNDAI dealer for details.

*8 : When adding coolant, use only deionized water or soft water for your vehicle and never mix hard water in the coolant filled at the factory. An improper coolant mixture can result in serious malfunction or engine damage.

*9 : Inspect drive belt tentioner, idler and alternator pulley and if necessary repair or replace.

*10 : For your convenience, it can be replaced prior to it's interval when you do maintenance of other items.

NORMAL MAINTENANCE SCHEDULE - FOR DIESEL ENGINE (EXCEPT EUROPE) (CONT.)

15,000 km (10,000 miles) or 12months	30,000 km (20,000 miles) or 24months
❑ Inspect air cleaner filter - Except Middle East	❑ Inspect air cleaner filter - Except Middle East
❑ Inspect air conditioner refrigerant/compressor (if equipped)	❑ Inspect air conditioner refrigerant/compressor (if equipped)
❑ Inspect battery condition	❑ Inspect battery condition
❑ Inspect brake lines, hoses and connections	❑ Inspect brake lines, hoses and connections
❑ Inspect brake/clutch (if equipped) fluid	❑ Inspect brake/clutch(if equipped) fluid
❑ Inspect disc brakes and pads	❑ Inspect disc brakes and pads
❑ Inspect drive shafts and boots	❑ Inspect drive shafts and boots
❑ Inspect exhaust system	❑ Inspect exhaust system
❑ Inspect front suspension ball joints	❑ Inspect front suspension ball joints
❑ Inspect parking brake	❑ Inspect fuel lines, hoses and connections
❑ Inspect steering gear rack, linkage and boots	❑ Inspect fuel tank air filter
❑ Inspect tire (pressure & tread wear)	❑ Inspect parking brake
❑ Replace air cleaner filter - For Middle East	❑ Inspect steering gear rack, linkage and boots
❑ Replace climate control air filter (if equipped)	❑ Inspect tire (pressure & tread wear)
❑ Replace engine oil and filter *1 *2 *3 *4 (Every 10,000 km (6,500 miles) or 12months)	❑ Replace air cleaner filter - For Middle East
	❑ Replace climate control air filter (if equipped)
	❑ Replace fuel filter cartridge *3
	❑ Replace engine oil and filter *1 *2 *3 *4 (Every 10,000 km (6,500 miles) or 12months)

NORMAL MAINTENANCE SCHEDULE - FOR DIESEL ENGINE (EXCEPT EUROPE) (CONT.)

45,000 km (30,000 miles) or 36months
❑ Inspect air conditioner refrigerant/compressor (if equipped)
❑ Inspect battery condition
❑ Inspect brake lines, hoses and connections
❑ Inspect brake/clutch(if equipped) fluid
❑ Inspect disc brakes and pads
❑ Inspect drive shafts and boots
❑ Inspect exhaust system
❑ Inspect front suspension ball joints
❑ Inspect parking brake
❑ Inspect steering gear rack, linkage and boots
❑ Inspect tire (pressure & tread wear)
❑ Replace air cleaner filter
❑ Replace climate control air filter (if equipped)
❑ Replace engine oil and filter *1 *2 *3 *4 (Every 10,000 km (6,500 miles) or 12months)

60,000 km (40,000 miles) or 48months
❑ Inspect air cleaner filter - Except Middle East
❑ Inspect air conditioner refrigerant/compressor (if equipped)
❑ Inspect battery condition
❑ Inspect brake lines, hoses and connections
❑ Inspect brake/clutch (if equipped) fluid
❑ Inspect disc brakes and pads
❑ Inspect drive shafts and boots
❑ Inspect exhaust system
❑ Inspect front suspension ball joints
❑ Inspect fuel filler cap
❑ Inspect fuel lines, hoses and connections
❑ Inspect parking brake
❑ Inspect steering gear rack, linkage and boots
❑ Inspect tire (pressure & tread wear)
❑ Inspect manual transaxle fluid *6 (if equipped)

(Continued)

NORMAL MAINTENANCE SCHEDULE - FOR DIESEL ENGINE (EXCEPT EUROPE) (CONT.)

(Continued)

- ❑ Replace air cleaner filter - For Middle East
- ❑ Replace climate control air filter (if equipped)
- ❑ Replace fuel filter cartridge *3
- ❑ Replace fuel tank air filter
- ❑ Replace engine oil and filter *1 *2 *3 *4
  (Every 10,000 km (6,500 miles) or 12months)
- ❑ Inspect cooling system
  (At first, 60,000 km (40,000 miles) or 48months
  after that, every 30,000 km (20,000 miles) or 24months)
- ❑ Inspect drive belt *9
  (At first, 80,000 km (50,000 miles) or 48months
  after that, every 20,000 km (12,500 miles) or 24months)

75,000 km (50,000 miles) or 60months

- ❑ Inspect air cleaner filter - Except Middle East
- ❑ Inspect air conditioner refrigerant/compressor (if equipped)
- ❑ Inspect battery condition
- ❑ Inspect brake lines, hoses and connections
- ❑ Inspect brake/clutch(if equipped) fluid
- ❑ Inspect disc brakes and pads
- ❑ Inspect drive shafts and boots
- ❑ Inspect exhaust system
- ❑ Inspect front suspension ball joints
- ❑ Inspect parking brake
- ❑ Inspect steering gear rack, linkage and boots
- ❑ Inspect tire (pressure & tread wear)
- ❑ Replace air cleaner filter - For Middle East
- ❑ Replace climate control air filter (if equipped)
- ❑ Replace engine oil and filter *1 *2 *3 *4
  (Every 10,000 km (6,500 miles) or 12months)
- ❑ Inspect drive belt *9
  (At first, 80,000 km (50,000 miles) or 48months
  after that, every 20,000 km (12,500 miles) or 24months)

NORMAL MAINTENANCE SCHEDULE - FOR DIESEL ENGINE (EXCEPT EUROPE) (CONT.)

90,000 km (60,000 miles) or 72months
❑ Inspect air conditioner refrigerant/compressor (if equipped)
❑ Inspect battery condition
❑ Inspect brake lines, hoses and connections
❑ Inspect brake/clutch(if equipped) fluid
❑ Inspect disc brakes and pads
❑ Inspect drive shafts and boots
❑ Inspect exhaust system
❑ Inspect front suspension ball joints
❑ Inspect fuel lines, hoses and connections
❑ Inspect fuel tank air filter
❑ Inspect parking brake
❑ Inspect steering gear rack, linkage and boots
❑ Inspect tire (pressure & tread wear)
(Continued)

(Continued)

- ❑ Replace air cleaner filter
- ❑ Replace climate control air filter (if equipped)
- ❑ Replace fuel filter cartridge *3
- ❑ Inspect cooling system
  (At first, 60,000 km (40,000 miles) or 48months
  after that, every 30,000 km (20,000 miles) or 24months)
- ❑ Replace engine oil and filter *1 *2 *3 *4
  (Every 10,000 km (6,500 miles) or 12months)
- ❑ Inspect drive belt *9
  (At first, 80,000 km (50,000 miles) or 48months
  after that, every 20,000 km (12,500 miles) or 24months)

NORMAL MAINTENANCE SCHEDULE - FOR DIESEL ENGINE (EXCEPT EUROPE) (CONT.)

105,000 km (70,000 miles) or 84months

- ❑ Inspect air cleaner filter - Except Middle East
- ❑ Inspect air conditioner refrigerant/compressor (if equipped)
- ❑ Inspect battery condition
- ❑ Inspect brake lines, hoses and connections
- ❑ Inspect brake/clutch(if equipped) fluid
- ❑ Inspect disc brakes and pads
- ❑ Inspect drive shafts and boots
- ❑ Inspect exhaust system
- ❑ Inspect front suspension ball joints
- ❑ Inspect parking brake
- ❑ Inspect steering gear rack, linkage and boots
- ❑ Inspect tire (pressure & tread wear)
- ❑ Replace air cleaner filter - For Middle East
- ❑ Replace climate control air filter (if equipped)

(Continued)

(Continued)

- ❑ Replace engine oil and filter *1 *2 *3 *4
  (Every 10,000 km (6,500 miles) or 12months)
- ❑ Inspect drive belt *9
  (At first, 80,000 km (50,000 miles) or 48months
  after that, every 20,000 km (12,500 miles) or 24months)

NORMAL MAINTENANCE SCHEDULE - FOR DIESEL ENGINE (EXCEPT EUROPE) (CONT.)

120,000 km (80,000 miles) or 96months

- ❑ Inspect air cleaner filter - Except Middle East
- ❑ Inspect air conditioner refrigerant/compressor (if equipped)
- ❑ Inspect battery condition
- ❑ Inspect brake lines, hoses and connections
- ❑ Inspect brake/clutch(if equipped) fluid
- ❑ Inspect disc brakes and pads
- ❑ Inspect drive shafts and boots
- ❑ Inspect exhaust system
- ❑ Inspect front suspension ball joints
- ❑ Inspect fuel filler cap
- ❑ Inspect fuel lines, hoses and connections
- ❑ Inspect parking brake
- ❑ Inspect steering gear rack, linkage and boots
- ❑ Inspect tire (pressure & tread wear)
- ❑ Inspect manual transaxle fluid *6 (if equipped)

(Continued)

(Continued)

- ❑ Replace air cleaner filter - For Middle East
- ❑ Replace climate control air filter (if equipped)
- ❑ Replace fuel filter cartridge *3
- ❑ Replace fuel tank air filter
- ❑ Replace coolant *8
  (At first, 210,000 km (120,000 miles) or 120months
  after that, every 30,000 km (20,000 miles) or 24months *10)
- ❑ Replace engine oil and filter *1 *2 *3 *4
  (Every 10,000 km (6,500 miles) or 12months)
- ❑ Inspect cooling system
  (At first, 60,000 km (40,000 miles) or 48months
  after that, every 30,000 km (20,000 miles) or 24months)
- ❑ Inspect drive belt *9
  (At first, 80,000 km (50,000 miles) or 48months
  after that, every 20,000 km (12,500 miles) or 24months)

No check, No service required

- ❑ Automatic transaxle fluid

MAINTENANCE UNDER SEVERE USAGE CONDITIONS - FOR DIESEL ENGINE (EXCEPT EUROPE)

The following items must be serviced more frequently on cars mainly used under severe driving conditions.
Refer to the chart below for the appropriate maintenance intervals.
R : Replace I : Inspect and if necessary, adjust, correct, clean or replace

Maintenance item	Maintenance operation	Maintenance intervals	Driving condition
Engine oil and engine oil filter	R	Every 5,000 km (3,000 miles) or 6 months	A, B, C, F, G, H, I, J, K, L
Air cleaner filter	R	Replace more frequently depending on the condition	C, E
Manual transaxle fluid (if equipped)	R	Every 120,000 km (80,000 miles)	C, D, E, G, H, I, K
Automatic transaxle fluid (if equipped)	R	Every 100,000 km (62,000 miles)	A, C, D, E, F, G, H, I, K
Steering gear rack, linkage and boots	I	Inspect more frequently depending on the condition	C, D, E, F, G
Front suspension ball joints	I	Inspect more frequently depending on the condition	C, D, E, F, G

Maintenance item	Maintenance operation	Maintenance intervals	Driving condition
Disc brakes and pads, calipers and rotors	I	Inspect more frequently depending on the condition	C, D, E, G, H
Parking brake	I	Inspect more frequently depending on the condition	C, D, G, H
Driveshaft and boots	I	Inspect more frequently depending on the condition	C, D, E, F, G, H, I, K
Climate control air filter (if equipped)	R	Replace more frequently depending on the condition	C, E, G

SEVERE DRIVING CONDITIONS

A : Repeatedly driving short distance of less than 8 km (5 miles) in normal temperature or less than 16 km (10 miles) in freezing temperature.

B : Extensive engine idling or low speed driving for long distances.

C : Driving on rough, dusty, muddy, unpaved, graveled or salt-spread roads.

D : Driving in areas using salt or other corrosive materials or in very cold weather

E : Driving in sandy areas

F : More than 50 % driving in heavy city traffic during hot weather above 32 °C (90 °F)

G : Driving on uphill, downhill, or mountain roads.

H : Towing a trailer or using a camper on roof rack.

I : Driving for patrol car, taxi, commercial car or vehicle towing.

J : Driving in very cold weather.

K : Driving over 170 km/h (106 mile/h).

L : Frequently driving in stop-and-go conditions.

EXPLANATION OF SCHEDULED MAINTENANCE ITEMS

Engine oil and filter

The engine oil and filter should be changed at the intervals specified in the maintenance schedule. If the car is being driven in severe conditions, more frequent oil and filter changes are required.

Drive belts

Inspect all drive belts for evidence of cuts, cracks, excessive wear or oil saturation and replace if necessary. Drive belts should be checked periodically for proper tension and adjusted as necessary.

Fuel filter (cartridge)

A clogged filter can limit the speed at which the vehicle may be driven, damage the emission system and cause multiple issues such as hard starting. If an excessive amount of foreign matter accumulates in the fuel tank, the filter may require replacement more frequently.

After installing a new filter, run the engine for several minutes, and check for leaks at the connections. Fuel filters should be installed by an authorized HYUNDAI dealer.

Fuel lines, fuel hoses and connections

Check the fuel lines, fuel hoses and connections for leakage and damage. Have an authorized HYUNDAI dealer replace any damaged or leaking parts immediately.

⚠ WARNING - Diesel only

Never work on injection system with engine running or within 30 seconds after shutting off engine. High pressure pump, rail, injectors and high pressure pipes are subject to high pressure even after the engine stopped. The fuel jet produced by fuel leaks may cause serious injury, if it touch the body. People using pacemakers should not move than 30cm closer to the ECU or wiring harness within the engine room while engine is running, since the high currents in the Common Rail system produce considerable magnetic fields.

Vapor hose and fuel filler cap

The vapor hose and fuel filler cap should be inspected at those intervals specified in the maintenance schedule. Make sure that a new vapor hose or fuel filler cap is correctly replaced.

Vacuum crankcase ventilation hoses (if equipped)

Inspect the surface of hoses for evidence of heat and/or mechanical damage. Hard and brittle rubber, cracking, tears, cuts, abrasions, and excessive swelling indicate deterioration. Particular attention should be paid to examine those hose surfaces nearest to high heat sources, such as the exhaust manifold.

Inspect the hose routing to assure that the hoses do not come in contact with any heat source, sharp edges or moving component which might cause heat damage or mechanical wear. Inspect all hose connections, such as clamps and couplings, to make sure they are secure, and that no leaks are present. Hoses should be replaced immediately if there is any evidence of deterioration or damage.

Air cleaner filter

A Genuine HYUNDAI air cleaner filter is recommended when the filter is replaced.

Spark plugs (for gasoline engine)

Make sure to install new spark plugs of the correct heat range.

Valve clearance (for gasoline engine 1.6L)

Inspect excessive valve noise and/or engine vibration and adjust if necessary. An authorized HYUNDAI dealer should perform the operation.

Cooling system

Check the cooling system parts, such as radiator, coolant reservoir, hoses and connections for leakage and damage. Replace any damaged parts.

Coolant

The coolant should be changed at the intervals specified in the maintenance schedule.

Manual transaxle fluid (if equipped)

Inspect the manual transaxle fluid according to the maintenance schedule.

Automatic transaxle fluid (if equipped)

Automatic transaxle fluid should not be checked under normal usage conditions.

But in severe conditions, the fluid should be changed at an authorized HYUNDAI dealer in accordance to the scheduled maintenance at the beginning of this chapter.

✻ NOTICE

Automatic transaxle fluid color is basically red.
As the vehicle is driven, the automatic transaxle fluid will begin to look darker. It is normal condition and you should not judge the need to replace the fluid based upon the changed color.

⚠ **CAUTION**

The use of a non-specified fluid could result in transaxle malfunction and failure.

Use only specified automatic transaxle fluid. (Refer to "Recommended lubricants and capacities" in section 8.)

Brake hoses and lines

Visually check for proper installation, chafing, cracks, deterioration and any leakage. Replace any deteriorated or damaged parts immediately.

Brake fluid

Check brake fluid level in the brake fluid reservoir. The level should be between "MIN" and "MAX" marks on the side of the reservoir. Use only hydraulic brake fluid conforming to DOT 3 or DOT 4 specification.

Brake pads, calipers and rotors

Check the pads for excessive wear, discs for run out and wear, and calipers for fluid leakage.

For more information on checking the pads or lining wear limit, refer to the Hyundai web site.

(**http://brakemanual.hmc.co.kr**)

Suspension mounting bolts

Check the suspension connections for looseness or damage. Retighten to the specified torque.

Parking brake

Inspect the parking brake system including the EPB actuator, wiring and connectors.

Steering gear box, linkage & boots/lower arm ball joint

With the vehicle stopped and engine off, check for excessive free-play in the steering wheel.

Check the linkage for bends or damage. Check the dust boots and ball joints for deterioration, cracks, or damage. Replace any damaged parts.

Drive shafts and boots

Check the drive shafts, boots and clamps for cracks, deterioration, or damage. Replace any damaged parts and, if necessary, repack the grease.

Air conditioning refrigerant/ compressor (if equipped)

Check the air conditioning lines and connections for leakage and damage.

ENGINE OIL

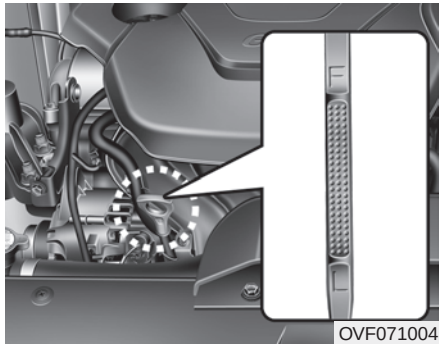

OVF071004

Checking the engine oil level

1. Be sure the vehicle is on level ground.
2. Start the engine and allow it to reach normal operating temperature.
3. Turn the engine off and wait for a few minutes (about 5 minutes) for the oil to return to the oil pan.
4. Pull the dipstick out, wipe it clean, and re-insert it fully.

⚠ WARNING - Radiator hose

Be very careful not to touch the radiator hose when checking or adding the engine oil as it may be hot enough to burn you.

5. Pull the dipstick out again and check the level. The level should be between F and L.

⚠ CAUTION

- ***Do not overfill the engine oil. It may damage the engine.***
- ***Do not spill engine oil, when adding or changing engine oil. If you drop the engine oil on the engine room, wipe it off immediately.***

⚠ CAUTION - Diesel engine

Overfilling the engine oil may cause severe dieseling due to churning effect. It may lead to engine damage accompanied with abrupt engine speed increment, combustion noise and white smoke emission.

OVF071005

If it is near or at L, add enough oil to bring the level to F. **Do not overfill.**

Use a funnel to help prevent oil from being spilled on engine components.

Use only the specified engine oil. (Refer to "Recommended lubricants and capacities" in section 8.)

Changing the engine oil and filter

Have engine oil and filter changed by an authorized HYUNDAI dealer according to the Maintenance Schedule at the beginning of this section.

⚠ WARNING

Used engine oil may cause irritation or cancer of the skin if left in contact with the skin for prolonged periods of time. Used engine oil contains chemicals that have caused cancer in laboratory animals. Always protect your skin by washing your hands thoroughly with soap and warm water as soon as possible after handling used oil.

ENGINE COOLANT

The high-pressure cooling system has a reservoir filled with year-round antifreeze coolant. The reservoir is filled at the factory.

Check the antifreeze protection and coolant concentration level at least once a year, at the beginning of the winter season, and before traveling to a colder climate.

Checking the coolant level

⚠ WARNING

Removing radiator cap

- **Never attempt to remove the radiator cap while the engine is operating or hot. Doing so might lead to cooling system and engine damage and could result in serious personal injury from escaping hot coolant or steam.**
- **Turn the engine off and wait until it cools down. Use extreme care when removing the radiator cap. Wrap a thick towel around it, and turn it counterclockwise slowly to the first stop. Step back while the pressure is released from the cooling system. When you are sure all the pressure has been released, press down on the cap, using a thick towel, and continue turning counterclockwise to remove it.**

(Continued)

(Continued)

- **Even if the engine is not operating, do not remove the radiator cap or the drain plug while the engine and radiator are hot. Hot coolant and steam may still blow out under pressure, causing serious injury.**

⚠ WARNING

The electric motor (cooling fan) is controlled by engine coolant temperature, refrigerant pressure and vehicle speed. It may sometimes operate even when the engine is not running. Use extreme caution when working near the blades of the cooling fan so that you are not injured by a rotating fan blades. As the engine coolant temperature decreases, the electric motor will automatically shut off. This is a normal condition.

If your vehicle is equipped with GDI, the electric motor (cooling fan) may operate until you disconnect the negative battery cable.

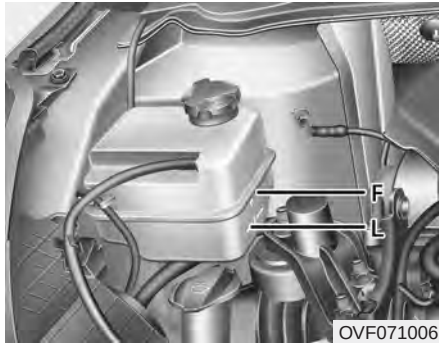

OVF071006

Check the condition and connections of all cooling system hoses and heater hoses. Replace any swollen or deteriorated hoses.

The coolant level should be filled between F (MAX) and L (MIN) marks on the side of the coolant reservoir when the engine is cool.

If the coolant level is low, add enough distilled (deionized) water. Bring the level to F (MAX), but do not overfill. If frequent coolant refill is required, see an authorized HYUNDAI dealer for a cooling system inspection.

Recommended engine coolant

- When adding coolant, use only deionized water or soft water for your vehicle and never mix hard water in the coolant filled at the factory. An improper coolant mixture can result in serious malfunction or engine damage.
- The engine in your vehicle has aluminum engine parts and must be protected by an ethylene-glycol-based coolant to prevent corrosion and freezing.
- DO NOT USE alcohol or methanol coolant or mix them with the specified coolant.
- Do not use a solution that contains more than 60% antifreeze or less than 35% antifreeze, which would reduce the effectiveness of the solution.

For mixture percentage, refer to the following table.

Ambient Temperature	Mixture Percentage (volume)	
	Antifreeze	Water
-15°C (5°F)	35	65
-25°C (-13°F)	40	60
-35°C (-31°F)	50	50
-45°C (-49°F)	60	40

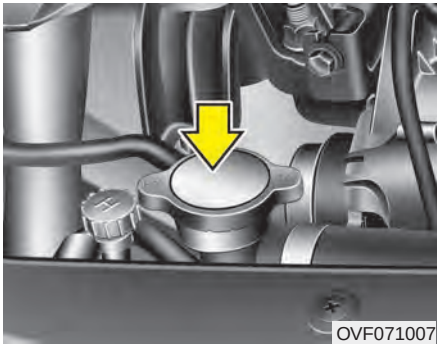
OVF071007

⚠ WARNING

Radiator cap

Do not remove the radiator cap when the engine and radiator are hot. Scalding hot coolant and steam may blow out under pressure causing serious injury.

Changing the coolant

Have coolant changed by an authorized HYUNDAI dealer according to the Maintenance Schedule at the beginning of this section.

⚠ CAUTION

Put a thick cloth or fabric around the radiator cap before refilling the coolant in order to prevent the coolant from overflowing into engine parts such as generator.

⚠ WARNING - Coolant

- **Do not use radiator coolant or antifreeze in the washer fluid reservoir.**
- **Radiator coolant can severely obscure visibility when sprayed on the windshield and may cause loss of vehicle control or damage to paint and body trim.**

BRAKE/CLUTCH FLUID

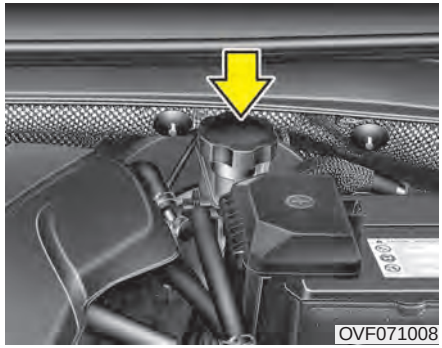

Checking the brake fluid level

Check the fluid level in the reservoir periodically. The fluid level should be between MAX and MIN marks on the side of the reservoir.

Before removing the reservoir cap and adding brake fluid, clean the area around the reservoir cap thoroughly to prevent brake fluid contamination.

If the level is low, add fluid to the MAX level. The level will fall with accumulated mileage. This is a normal condition associated with the wear of the brake linings. If the fluid level is excessively low, have the brake system checked by an authorized HYUNDAI dealer.

Use only the specified brake fluid. (Refer to "Recommended lubricants and capacities" in section 8.)

Never mix different types of fluid.

⚠ WARNING - Loss of brake fluid

In the event the brake system requires frequent additions of fluid, the vehicle should be inspected by an authorized HYUNDAI dealer.

⚠ WARNING - Brake fluid

When changing and adding brake fluid, handle it carefully. Do not let it come in contact with your eyes. If brake fluid should come in contact with your eyes, immediately flush them with a large quantity of fresh tap water. Have your eyes examined by a doctor as soon as possible.

⚠ CAUTION

Do not allow brake fluid to contact the vehicle's body paint, as paint damage will result. Brake fluid, which has been exposed to open air for an extended time should never be used as its quality cannot be guaranteed. It should be disposed of properly. Don't put in the wrong kind of fluid. A few drops of mineral-based oil, such as engine oil, in your brake system can damage brake system parts.

WASHER FLUID

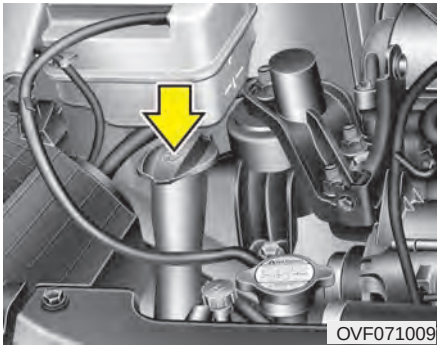

Checking the washer fluid level

Check the fluid level in the washer fluid reservoir and add fluid if necessary.

Also, add washer fluid when the low washer fluid level warning indicator ( ) illuminates on the instrument cluster.

Plain water may be used if washer fluid is not available. However, use washer solvent with antifreeze characteristics in cold climates to prevent freezing.

⚠ WARNING - Coolant

- **Do not use radiator coolant or antifreeze in the washer fluid reservoir.**
- **Radiator coolant can severely obscure visibility when sprayed on the windshield and may cause loss of vehicle control or damage to paint and body trim.**
- **Windshield Washer fluid agents contain some amounts of alcohol and can be flammable under certain circumstances. Do not allow sparks or flame to contact the washer fluid or the washer fluid reservoir. Damage to the vehicle or occupants could occur.**
- **Windshield washer fluid is poisonous to humans and animals. Do not drink and avoid contacting windshield washer fluid. Serious injury or death could occur.**

FUEL FILTER (FOR DIESEL)

Draining water from fuel filter

The fuel filter for diesel engine plays an important role of separating water from fuel and accumulating the water in its bottom.

If water accumulates in the fuel filter, the warning light comes on when the ignition switch is in the ON position.

If this warning light illuminates, take your car to an authorized HYUNDAI dealer and have drain the water and checked the system.

⚠ CAUTION

If the water accumulated in the fuel filter is not drained at proper times, damages to the major parts such as the fuel system can be caused by water permeation in the fuel filter.

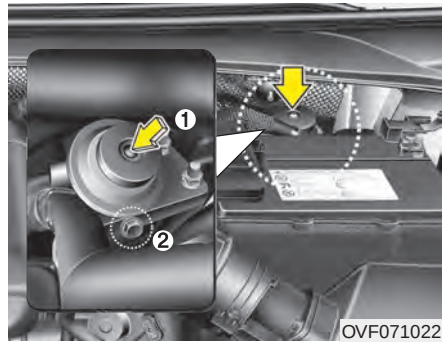

OVF071022

Extracting air from the fuel filter

If you drive until you have no fuel left or if you replace the fuel filter, be sure to extract air from the fuel system as it makes it difficult to start the engine.

1. Pump up and down(1) approximately 50 times until the pump is hard.
2. Extract air from the fuel filter by removing the bolt(2) with a cross-tip screw driver and reinstall the bolt(2).
3. Pump up and down(1) approximately 15 times.
4. Extract air from the fuel filter by removing the bolt(2) with a cross-tip screw driver and reinstall the bolt(2).
5. Pump up and down(1) approximately 5 times.

✻ NOTICE

- **Use cloths when you extract air so that the fuel is not sprayed around.**
- **Clean the fuel around the fuel filter or the injection pump before starting the engine to prevent fire.**
- **Finally, check each part if the fuel is leaking.**

AIR CLEANER

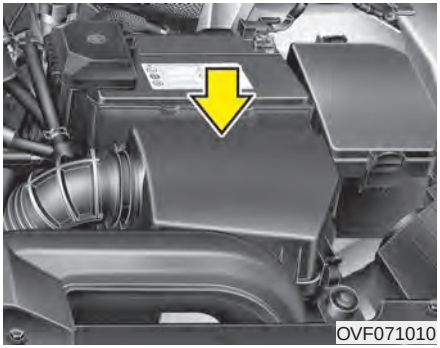
OVF071010

Filter replacement

It must be replaced when necessary, and should not be washed.

You can clean the filter when inspecting the air cleaner element.

Clean the filter by using compressed air.

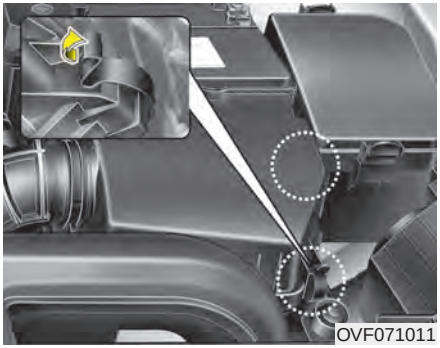
OVF071011

1. Loosen the air cleaner cover attaching clips and open the cover.

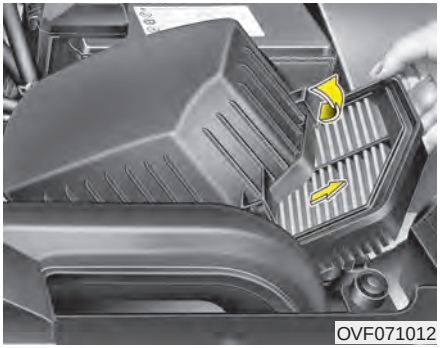
OVF071012

2. Wipe the inside of the air cleaner.
3. Replace the air cleaner filter.
4. Lock the cover with the cover attaching clips.

Replace the filter according to the Maintenance Schedule.

If the vehicle is operated in extremely dusty or sandy areas, replace the element more often than the usual recommended intervals. (Refer to “Maintenance under severe usage conditions” in this section.)

⚠ CAUTION

- ***Do not drive with the air cleaner removed; this will result in excessive engine wear.***
- ***When removing the air cleaner filter, be careful that dust or dirt does not enter the air intake, or damage may result.***
- ***Use a HYUNDAI genuine part. Use of nongenuine part could damage the air flow sensor or turbo charger.***

CLIMATE CONTROL AIR FILTER (IF EQUIPPED)

Filter inspection

If the vehicle is operated in the severely air-polluted cities or on dusty rough roads for a long period, it should be inspected more frequently and replaced earlier. When you, the owner, replace the climate control air filter, replace it performing the following procedure, and be careful to avoid damaging other components.

Replace the filter according to the maintenance Schedule.

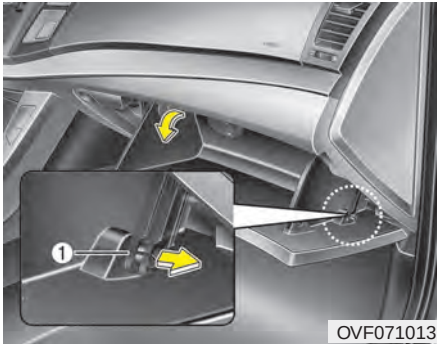

OVF071013

Filter replacement

1. Open the glove box and remove the support strap (1).

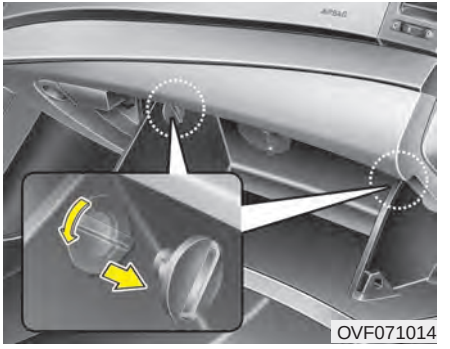
OVF071014

2. With the glove box open, remove the stoppers on both sides.

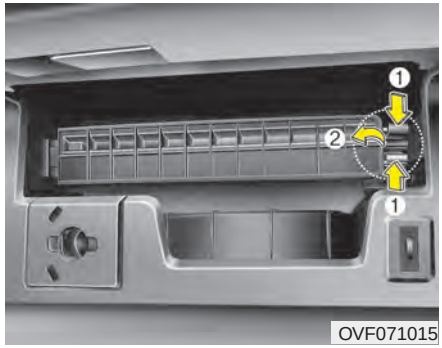

OVF071015

3. Remove the climate control air filter case while pressing the lock on the right side of the cover.

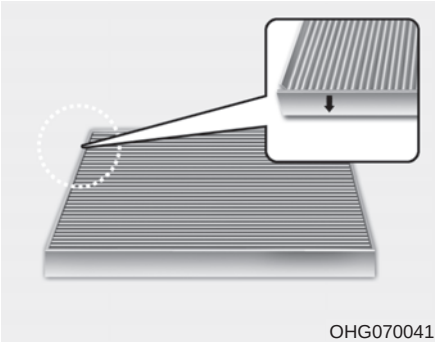
OHG070041

4. Replace the climate control air filter.
5. Reassemble in the reverse order of disassembly.

✻ NOTICE

When replacing the climate control air filter install it properly. Otherwise, the system may produce noise and the effectiveness of the filter may be reduced.

WIPER BLADES

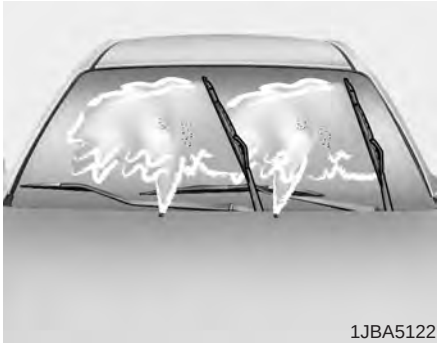
1JBA5122

Blade inspection

✻ NOTICE

Commercial hot waxes applied by automatic car washes have been known to make the windshield difficult to clean.

Contamination of either the windshield or the wiper blades with foreign matter can reduce the effectiveness of the windshield wipers. Common sources of contamination are insects, tree sap, and hot wax treatments used by some commercial car washes. If the blades are not wiping properly, clean both the window and the blades with a good cleaner or mild detergent, and rinse thoroughly with clean water.

⚠ CAUTION

To prevent damage to the wiper blades, do not use gasoline, kerosene, paint thinner, or other solvents on or near them.

Blade replacement

When the wipers no longer clean adequately, the blades may be worn or cracked, and require replacement.

⚠ CAUTION

To prevent damage to the wiper arms or other components, do not attempt to move the wipers manually.

⚠ CAUTION

The use of a non-specified wiper blade could result in wiper malfunction and failure.

Front windshield wiper blade

1. Raise the wiper arm.

✻ NOTICE

Do not allow the wiper arm to fall against the windshield, since it may chip or crack the windshield.

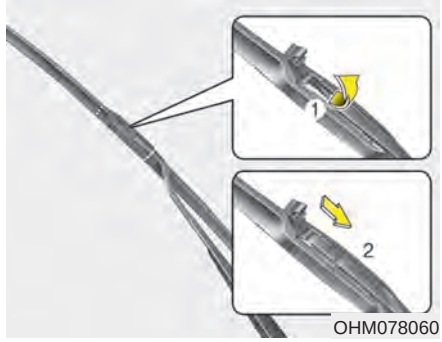

2. Lift up the wiper blade clip. Then pull down the blade assembly and remove it.

3. Install the blade assembly in the reverse order of removal.
4. Return the wiper arm to the original position.

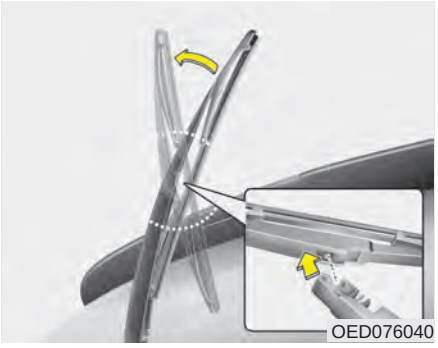

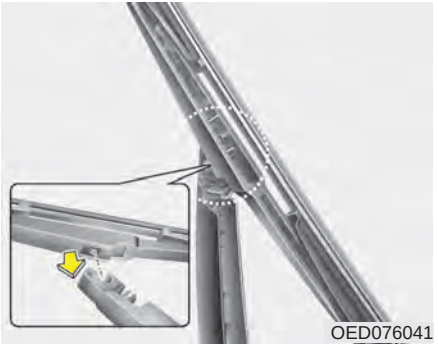

Rear window wiper blade

1. Raise the wiper arm and pull out the wiper blade assembly.
2. Install the new blade assembly by inserting the center part into the slot in the wiper arm until it clicks into place.
3. Make sure the blade assembly is installed firmly by trying to pull it slightly.

To prevent damage to the wiper arms or other components, have an authorized HYUNDAI dealer replace the wiper blade.

BATTERY

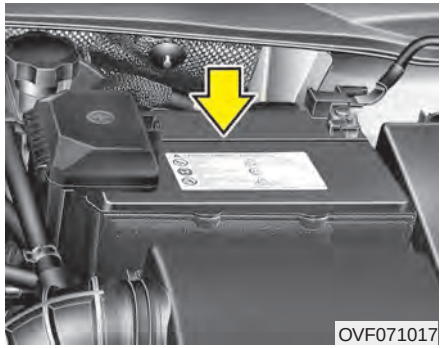

For best battery service

- Keep the battery securely mounted.
- Keep the battery top clean and dry.
- Keep the terminals and connections clean, tight, and coated with petroleum jelly or terminal grease.
- Rinse any spilled electrolyte from the battery immediately with a solution of water and baking soda.
- If the vehicle is not going to be used for an extended time, disconnect the battery cables.

WARNING - Battery dangers

Always read the following instructions carefully when handling a battery.

Keep lighted cigarettes and all other flames or sparks away from the battery.

Hydrogen, a highly combustible gas, is always present in battery cells and may explode if ignited.

Keep batteries out of the reach of children because batteries contain highly corrosive SULFURIC ACID. Do not allow battery acid to contact your skin, eyes, clothing or paint finish.

(Continued)

(Continued)

If any electrolyte gets into your eyes, flush your eyes with clean water for at least 15 minutes and get immediate medical attention.

If electrolyte gets on your skin, thoroughly wash the contacted area. If you feel a pain or a burning sensation, get medical attention immediately.

Wear eye protection when charging or working near a battery. Always provide ventilation when working in an enclosed space.

An inappropriately disposed battery can be harmful to the environment and human health. Dispose the battery according to your local law(s) or regulation.

(Continued)

(Continued)

The battery contains lead. Do not dispose of it after use. Please return the battery to an authorized HYUNDAI dealer to be recycled.

- **When lifting a plastic-cased battery, excessive pressure on the case may cause battery acid to leak, resulting in personal injury. Lift with a battery carrier or with your hands on opposite corners.**
- **Never attempt to recharge the battery when the battery cables are connected.**
- **The electrical ignition system works with high voltage. Never touch these components with the engine running or the ignition switched on.**

Failure to follow the above warnings can result in serious bodily injury or death.

⚠ CAUTION

If you use unauthorized electronic devices, the battery may be discharged. Never use unauthorized devices.

Battery recharging

Your vehicle has a maintenance-free, calcium-based battery.

- If the battery becomes discharged in a short time (because, for example, the headlights or interior lights were left on while the vehicle was not in use), recharge it by slow charging (trickle) for 10 hours.
- If the battery gradually discharges because of high electric load while the vehicle is being used, recharge it at 20-30A for two hours.

⚠ WARNING - Recharging battery

When recharging the battery, observe the following precautions:

- **The battery must be removed from the vehicle and placed in an area with good ventilation.**
- **Do not allow cigarettes, sparks, or flame near the battery.**
- **Watch the battery during charging, and stop or reduce the charging rate if the battery cells begin gassing (boiling) violently or if the temperature of the electrolyte of any cell exceeds 49°C (120°F).**
- **Wear eye protection when checking the battery during charging.**

(Continued)

(Continued)

- **Disconnect the battery charger in the following order.**
  1. **Turn off the battery charger main switch.**
  2. **Unhook the negative clamp from the negative battery terminal.**
  3. **Unhook the positive clamp from the positive battery terminal.**
- **Before performing maintenance or recharging the battery, turn off all accessories and stop the engine.**
- **The negative battery cable must be removed first and installed last when the battery is disconnected.**

Reset items

Items should be reset after the battery has been discharged or the battery has been disconnected.

- Auto up/down window (See section 4)
- Sunroof (See section 4)
- Trip computer (See section 4)
- Climate control system (See section 4)
- Clock (See section 4)
- Audio (See section 4)

TIRES AND WHEELS

Tire care

For proper maintenance, safety, and maximum fuel economy, you must always maintain recommended tire inflation pressures and stay within the load limits and weight distribution recommended for your vehicle.

Recommended cold tire inflation pressures

All tire pressures (including the spare) should be checked when the tires are cold. “Cold Tires” means the vehicle has not been driven for at least three hours or driven less than 1.6 km (1 mile).

Recommended pressures must be maintained for the best ride, top vehicle handling, and minimum tire wear.

For recommended inflation pressure refer to “Tire and wheels” in section 8.

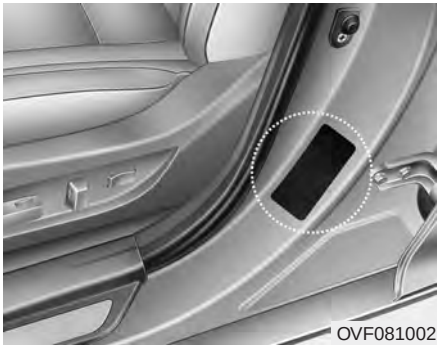

All specifications (sizes and pressures) can be found on a label attached to the vehicle.

⚠ WARNING - Tire underinflation

Severe underinflation (70 kPa (10 psi) or more) can lead to severe heat build-up, causing blowouts, tread separation and other tire failures that can result in the loss of vehicle control leading to severe injury or death. This risk is much higher on hot days and when driving for long periods at high speeds.

⚠ CAUTION

- *Underinflation also results in excessive wear, poor handling and reduced fuel economy. Wheel deformation also is possible. Keep your tire pressures at the proper levels. If a tire frequently needs refilling, have it checked by an authorized HYUNDAI dealer.*
- *Overinflation produces a harsh ride, excessive wear at the center of the tire tread, and a greater possibility of damage from road hazards.*

⚠ CAUTION

- *Warm tires normally exceed recommended cold tire pressures by 28 to 41 kPa (4 to 6 psi). Do not release air from warm tires to adjust the pressure or the tires will be underinflated.*
- *Be sure to reinstall the tire inflation valve caps. Without the valve cap, dirt or moisture could get into the valve core and cause air leakage. If a valve cap is missing, install a new one as soon as possible.*

⚠ WARNING - Tire inflation

Overinflation or underinflation can reduce tire life, adversely affect vehicle handling, and lead to sudden tire failure. This could result in loss of vehicle control and potential injury.

⚠ CAUTION - Tire pressure

Always observe the following:

- *Check tire pressure when the tires are cold. (After vehicle has been parked for at least three hours or hasn't been driven more than 1.6 km (1 mile) since startup.)*
- *Check the pressure of your spare tire each time you check the pressure of other tires.*
- *Never overload your vehicle. Be careful not to overload a vehicle luggage rack if your vehicle is equipped with one.*
- *Worn, old tires can cause accidents. If your tread is badly worn, or if your tires have been damaged, replace them.*

Checking tire inflation pressure

Check your tires once a month or more.

Also, check the tire pressure of the spare tire.

How to check

Use a good quality gage to check tire pressure. You can not tell if your tires are properly inflated simply by looking at them. Radial tires may look properly inflated even when they're underinflated.

Check the tire's inflation pressure when the tires are cold. - "Cold" means your vehicle has been sitting for at least three hours or driven no more than 1.6 km (1 mile).

Remove the valve cap from the tire valve stem. Press the tire gage firmly onto the valve to get a pressure measurement. If the cold tire inflation pressure matches the recommended pressure on the tire and loading information label, no further adjustment is necessary. If the pressure is low, add air until you reach the recommended amount.

If you overfill the tire, release air by pushing on the metal stem in the center of the tire valve. Recheck the tire pressure with the tire gage. Be sure to put the valve caps back on the valve stems. They help prevent leaks by keeping out dirt and moisture.

⚠ WARNING

- **Inspect your tires frequently for proper inflation as well as wear and damage. Always use a tire pressure gauge.**
- **Tires with too much or too little pressure wear unevenly causing poor handling, loss of vehicle control, and sudden tire failure leading to accidents, injuries, and even death. The recommended cold tire pressure for your vehicle can be found in this manual and on the tire label located on the driver's side center pillar.**
- **Worn tires can cause accidents. Replace tires that are worn, show uneven wear, or are damaged.**
- **Remember to check the pressure of your spare tire. HYUNDAI recommends that you check the spare every time you check the pressure of the other tires on your vehicle.**

Tire rotation

To equalize tread wear, it is recommended that the tires be rotated every 12,000 km (7,500 miles) or sooner if irregular wear develops.

During rotation, check the tires for correct balance.

When rotating tires, check for uneven wear and damage. Abnormal wear is usually caused by incorrect tire pressure, improper wheel alignment, out-of-balance wheels, severe braking or severe cornering. Look for bumps or bulges in the tread or side of tire. Replace the tire if you find either of these conditions. Replace the tire if fabric or cord is visible. After rotation, be sure to bring the front and rear tire pressures to specification and check lug nut tightness.

Refer to “Tire and wheels” in section 8.

With a full-size spare tire (if equipped)

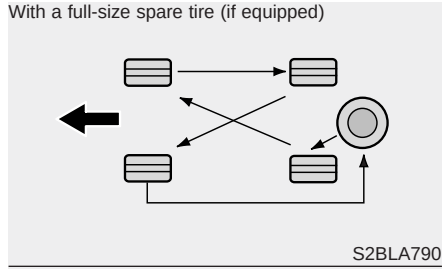

S2BLA790

Without a spare tire

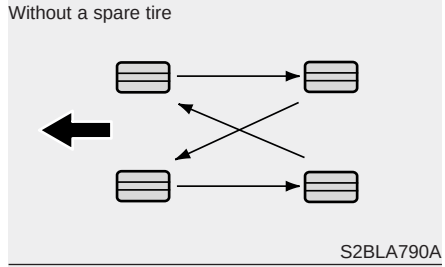

S2BLA790A

Directional tires (if equipped)

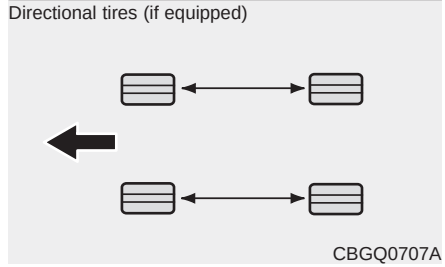

CBGQ0707A

Disc brake pads should be inspected for wear whenever tires are rotated.

✻ NOTICE

Rotate radial tires that have an asymmetric tread pattern only from front to rear and not from right to left.

⚠ WARNING

- **Do not use the compact spare tire for tire rotation.**
- **Do not mix bias ply and radial ply tires under any circumstances. This may cause unusual handling characteristics that could result in death, severe injury, or property damage.**

Wheel alignment and tire balance

The wheels on your vehicle were aligned and balanced carefully at the factory to give you the longest tire life and best overall performance.

In most cases, you will not need to have your wheels aligned again. However, if you notice unusual tire wear or your vehicle pulling one way or the other, the alignment may need to be reset.

If you notice your vehicle vibrating when driving on a smooth road, your wheels may need to be rebalanced.

⚠ CAUTION

Improper wheel weights can damage your vehicle's aluminum wheels. Use only approved wheel weights.

Tire replacement

If the tire is worn evenly, a tread wear indicator will appear as a solid band across the tread. This shows there is less than 1.6 mm (1/16 in.) of tread left on the tire. Replace the tire when this happens.

Do not wait for the band to appear across the entire tread before replacing the tire.

⚠ WARNING - Replacing tires

- **Driving on worn-out tires is very hazardous and will reduce braking effectiveness, steering accuracy, and traction.**
- **Your vehicle is equipped with tires designed to provide for safe ride and handling capability. Do not use a size and type of tire and wheel that is different from the one that is originally installed on your vehicle. It can affect the safety and performance of your vehicle, which could lead to handling failure or rollover and serious injury. When replacing the tires, be sure to equip all four tires with the tire and wheel of the same size, type, tread, brand and load-carrying capacity.**

(Continued)

(Continued)

- **The use of any other tire size or type may seriously affect ride, handling, ground clearance, stopping distance, body to tire clearance, snow tire clearance, and speedometer reliability.**
- **It is best to replace all four tires at the same time. If that is not possible, or necessary, then replace the two front or two rear tires as a pair. Replacing just one tire can seriously affect your vehicle's handling.**
- **The ABS works by comparing the speed of the wheels. Tire size can affect wheel speed. When replacing tires, all 4 tires must use the same size originally supplied with the vehicle. Using tires of a different size can cause the ABS (Anti-lock Brake System) and ESP (Electronic Stability Program) (if equipped) to work irregularly.**

Compact spare tire replacement (if equipped)

A compact spare tire has a shorter tread life than a regular size tire. Replace it when you can see the tread wear indicator bars on the tire. The replacement compact spare tire should be the same size and design tire as the one provided with your new vehicle and should be mounted on the same compact spare tire wheel. The compact spare tire is not designed to be mounted on a regular size wheel, and the compact spare tire wheel is not designed for mounting a regular size tire.

Wheel replacement

When replacing the metal wheels for any reason, make sure the new wheels are equivalent to the original factory units in diameter, rim width and offset.

⚠ WARNING

A wheel that is not the correct size may adversely affect wheel and bearing life, braking and stopping abilities, handling characteristics, ground clearance, body-to-tire clearance, snow chain clearance, speedometer and odometer calibration, headlight aim and bumper height.

Tire traction

Tire traction can be reduced if you drive on worn tires, tires that are improperly inflated or on slippery road surfaces. Tires should be replaced when tread wear indicators appear. To reduce the possibility of losing control, slow down whenever there is rain, snow or ice on the road.

Tire maintenance

In addition to proper inflation, correct wheel alignment helps to decrease tire wear. If you find a tire is worn unevenly, have your dealer check the wheel alignment.

When you have new tires installed, make sure they are balanced. This will increase vehicle ride comfort and tire life. Additionally, a tire should always be rebalanced if it is removed from the wheel.

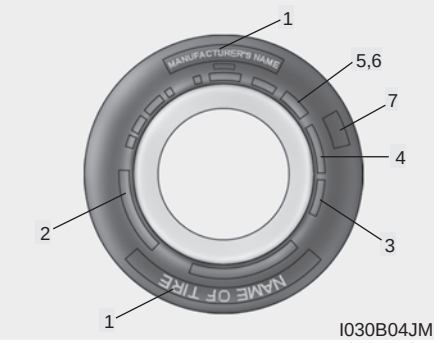

Tire sidewall labeling

This information identifies and describes the fundamental characteristics of the tire and also provides the tire identification number (TIN) for safety standard certification. The TIN can be used to identify the tire in case of a recall.

1. Manufacturer or brand name

Manufacturer or Brand name is shown.

2. Tire size designation

A tire's sidewall is marked with a tire size designation. You will need this information when selecting replacement tires for your car. The following explains what the letters and numbers in the tire size designation mean.

Example tire size designation:

(These numbers are provided as an example only; your tire size designator could vary depending on your vehicle.)

205/60R16 92V

P - Applicable vehicle type (tires marked with the prefix "P" are intended for use on passenger vehicles or light trucks; however, not all tires have this marking).

205 - Tire width in millimeters.

60 - Aspect ratio. The tire's section height as a percentage of its width.

R - Tire construction code (Radial).

16 - Rim diameter in inches.

92 - Load Index, a numerical code associated with the maximum load the tire can carry.

V - Speed Rating Symbol. See the speed rating chart in this section for additional information.

Wheel size designation

Wheels are also marked with important information that you need if you ever have to replace one. The following explains what the letters and numbers in the wheel size designation mean.

Example wheel size designation:

7.0JX16

7.0 - Rim width in inches.

J - Rim contour designation.

16 - Rim diameter in inches.

Tire speed ratings

The chart below lists many of the different speed ratings currently being used for passenger cars. The speed rating is part of the tire size designation on the sidewall of the tire. This symbol corresponds to that tire's designed maximum safe operating speed.

Speed Rating Symbol	Maximum Speed
S	180 km/h (112 mph)
T	190 km/h (118 mph)
H	210 km/h (130 mph)
V	240 km/h (149 mph)
Z	Above 240 km/h (149 mph)

3. Checking tire life (TIN : Tire Identification Number)

Any tires that are over 6 years, based on the manufacturing date, tire strength and performance, decline with age naturally (even unused spare tires). Therefore, the tires (including the spare tire) should be replaced by new ones. You can find the manufacturing date on the tire sidewall (possibly on the inside of the wheel), displaying the DOT Code. The DOT Code is a series of numbers on a tire consisting of numbers and English letters. The manufacturing date is designated by the last four digits (characters) of the DOT code.

DOT : XXXX XXXX OOOO

The front part of the DOT means a plant code number, tire size and tread pattern and the last four numbers indicate week and year manufactured.

For example:

DOT XXXX XXXX 1611 represents that the tire was produced in the 16th week of 2011.

⚠ WARNING - Tire age

Tires degrade over time, even when they are not being used. Regardless of the remaining tread, it is recommended that tires generally be replaced after six (6) years of normal service. Heat caused by hot climates or frequent high loading conditions can accelerate the aging process. Failure to follow this Warning can result in sudden tire failure, which could lead to a loss of control and an accident involving serious injury or death.

4. Tire ply composition and material

The number of layers or plies of rubber-coated fabric are in the tire. Tire manufacturers also must indicate the materials in the tire, which include steel, nylon, polyester, and others. The letter "R" means radial ply construction; the letter "D" means diagonal or bias ply construction; and the letter "B" means belted-bias ply construction.

5. Maximum permissible inflation pressure

This number is the greatest amount of air pressure that should be put in the tire. Do not exceed the maximum permissible inflation pressure. Refer to the Tire and Loading Information label for recommended inflation pressure.

6. Maximum load rating

This number indicates the maximum load in kilograms and pounds that can be carried by the tire. When replacing the tires on the vehicle, always use a tire that has the same load rating as the factory installed tire.

7. Uniform tire quality grading

Quality grades can be found where applicable on the tire sidewall between tread shoulder and maximum section width.

For example:

TREADWEAR 200

TRACTION AA

TEMPERATURE A

Tread wear

The tread wear grade is a comparative rating based on the wear rate of the tire when tested under controlled conditions on a specified government test course. For example, a tire graded 150 would wear one-and-a-half times (1½) as well on the government course as a tire graded 100.

The relative performance of tires depends upon the actual conditions of their use, however, and may depart significantly from the norm because of variations in driving habits, service practices and differences in road characteristics and climate.

These grades are molded on the side-walls of passenger vehicle tires. The tires available as standard or optional equipment on your vehicles may vary with respect to grade.

Traction - AA, A, B & C

The traction grades, from highest to lowest, are AA, A, B and C. Those grades represent the tires ability to stop on wet pavement as measured under controlled conditions on specified government test surfaces of asphalt and concrete. A tire marked C may have poor traction performance.

⚠ WARNING

The traction grade assigned to this tire is based on straight-ahead braking traction tests, and does not include acceleration, cornering, hydroplaning, or peak traction characteristics.

Temperature -A, B & C

The temperature grades are A (the highest), B and C representing the tire's resistance to the generation of heat and its ability to dissipate heat when tested under controlled conditions on a specified indoor laboratory test wheel.

Sustained high temperature can cause the material of the tire to degenerate and reduce tire life, and excessive temperature can lead to sudden tire failure. Grades B and A represent higher levels of performance on the laboratory test wheel than the minimum required by the law.

⚠ WARNING - Tire temperature

The temperature grade for this tire is established for a tire that is properly inflated and not overloaded. Excessive speed, underinflation, or excessive loading, either separately or in combination, can cause heat build-up and possible sudden tire failure. This can cause loss of vehicle control and serious injury or death.

FUSES

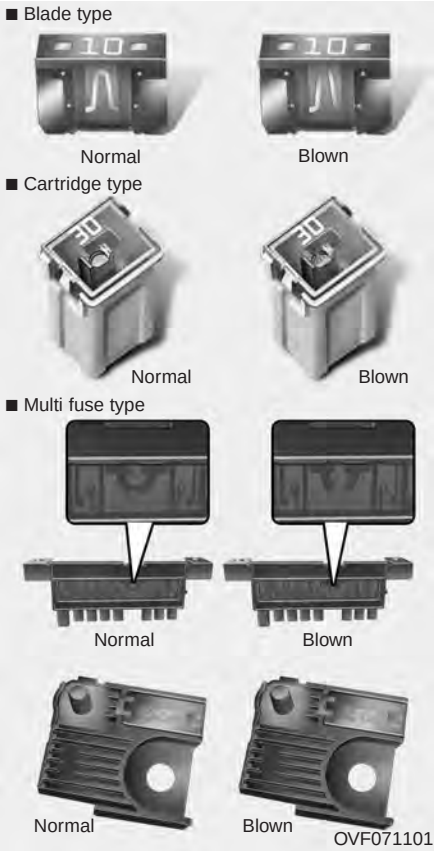

A vehicle's electrical system is protected from electrical overload damage by fuses.

This vehicle has 3 (or 4) fuse panels, one located in the driver's side panel bolster, the other in the engine compartment near the battery.

If any of your vehicle's lights, accessories, or controls do not work, check the appropriate circuit fuse. If a fuse has blown, the element inside the fuse will be melted.

If the electrical system does not work, first check the driver's side fuse panel.

Always replace a blown fuse with one of the same rating.

If the replacement fuse blows, this indicates an electrical problem. Avoid using the system involved and immediately consult an authorized HYUNDAI dealer.

Three kinds of fuses are used: blade type for lower amperage rating, cartridge type, and multi fuse type for higher amperage ratings.

⚠ WARNING - Fuse replacement

- **Never replace a fuse with anything but another fuse of the same rating.**
- **A higher capacity fuse could cause damage and possibly a fire.**
- **Never install a wire or aluminum foil instead of the proper fuse - even as a temporary repair. It may cause extensive wiring damage and a possible fire.**

⚠ CAUTION

Do not use a screwdriver or any other metal object to remove fuses because it may cause a short circuit and damage the system.

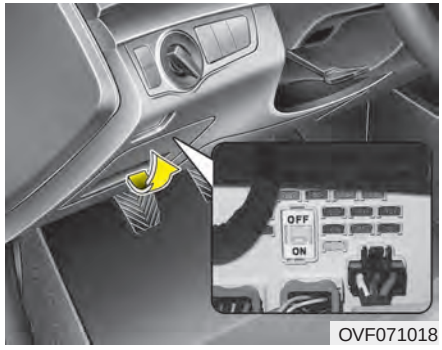

OVF071018

Inner panel fuse replacement

1. Turn the ignition switch and all other switches off.
2. Open the fuse panel cover.

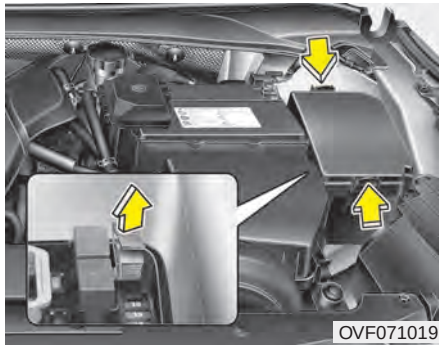
OVF071019

3. Pull the suspected fuse straight out. Use the removal tool provided in the engine compartment fuse panel.
4. Check the removed fuse; replace it if it is blown.
5. Push in a new fuse of the same rating, and make sure it fits tightly in the clips.

If it fits loosely, consult an authorized HYUNDAI dealer.

If you do not have a spare, use a fuse of the same rating from a circuit you may not need for operating the vehicle, such as the cigar lighter fuse.

If the headlights or other electrical components do not work and the fuses are OK, check the fuse block in the engine compartment. If a fuse is blown, it must be replaced.

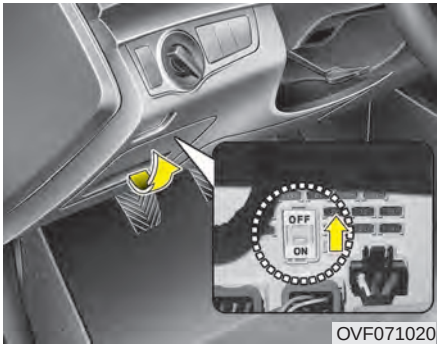

OVF071020

Fuse switch

Always, put the fuse switch at the ON position.

If you move the switch to the OFF position, some items such as audio and digital clock must be reset and transmitter (or smart key) may not work properly.

⚠ CAUTION

Always place the fuse switch in the ON position while driving the vehicle.

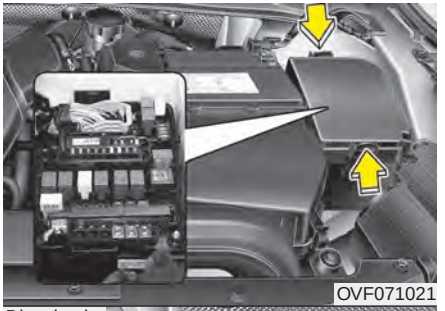
OVF071021

Diesel only

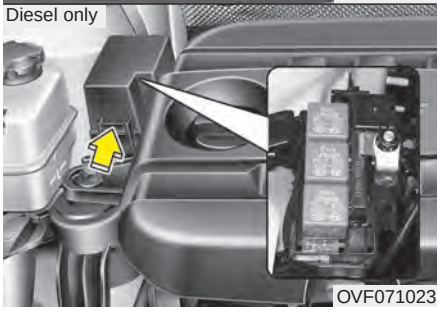
OVF071023

Engine compartment panel fuse replacement

1. Turn the ignition switch and all other switches off.
2. Remove the fuse box cover by pressing the tap and pulling up.
3. Check the removed fuse; replace it if it is blown. To remove or insert the fuse, use the fuse puller in the engine compartment fuse panel.
4. Push in a new fuse of the same rating, and make sure it fits tightly in the clips. If it fits loosely, consult an authorized HYUNDAI dealer.

⚠ CAUTION

After checking the fuse box in the engine compartment, securely install the fuse box cover. If not, electrical failures may occur from water leaking in.

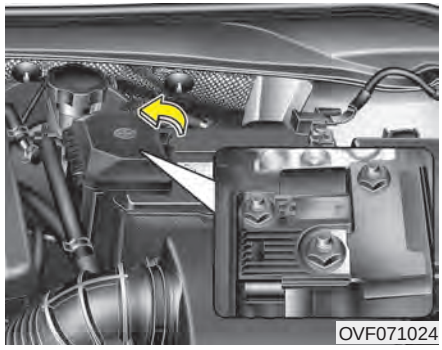
OVF071024

Main fuse

If the main fuse is blown, it must be removed as follows:

1. Turn off the engine.
2. Disconnect the negative battery cable.
3. Remove the nuts shown in the picture above.
4. Replace the fuse with a new one of the same rating.
5. Reinstall in the reverse order of removal.

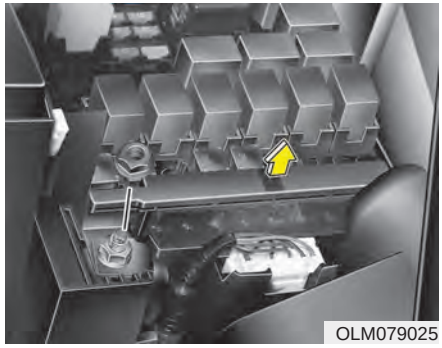
OLM079025

Multi fuse

If the multi fuse is blown, it must be removed as follows:

1. Turn off the engine.
2. Disconnect the negative battery cable.
3. Remove the fuse panel on the right side in the engine compartment.
4. Remove the nuts shown in the picture above.
5. Replace the fuse with a new one of the same rating.
6. Reinstall in the reverse order of removal.

✻ NOTICE

If the multi fuse or main fuse is blown, consult an authorized HYUNDAI dealer.

Fuse/Relay panel description

Inside the fuse/relay box covers, you can find the fuse/relay label describing fuse/relay name and capacity.

Driver's side panel

Engine compartment

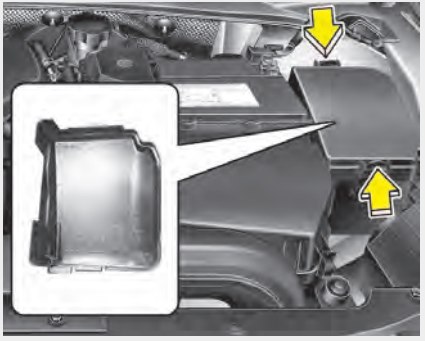

Diesel only

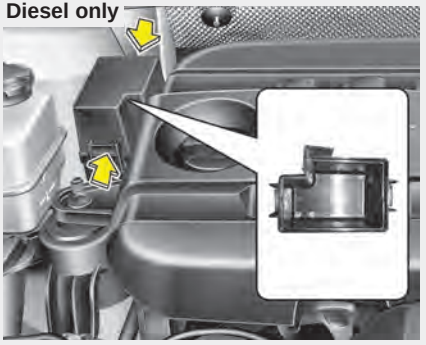

OVF071025/OVF071026/OVF071028/OVF071027

✻ NOTICE

Not all fuse panel descriptions in this manual may be applicable to your vehicle. It is accurate at the time of printing. When you inspect the fuse box on your vehicle, refer to the fuse box label.

Instrument panel (Driver's side fuse panel)

No.	Fuse rating	Symbol	Fuse Name	Protected component
1	20A	POWER OUTLET 2	POWER OUTLET 2	Console Power Outlet, Rear Power Outlet
2	30A	PWR	POWER TAIL GATE	Power Tail Gate
3	10A	MODULE 1	MODULE 1	Smart Key Control Module, BCM, Audio, AMP, JBL AMP, A/V & Navigation Head Unit, DC-DC Converter (Audio/AMP), Over Head Console Lamp, Parking Guide System, Power Outside Mirror Switch
4	10A	MODULE 4	MODULE 4	E/R Fuse & Relay Box (RLY. 12), Stop Lamp Switch, Multipurpose Check Connector, Active Air Flap Unit, Fuel Filter Warning Sensor (D4FD)
5	7.5A	MODULE 3	MODULE 3	Smart Key Control Module, BCM, Panorama Sunroof, Rain Sensor, Driver/Passenger CCS Control Module, ICM Relay Box (Headlamp Washer Relay)
6	15A	POWER OUTLET 1	POWER OUTLET 1	Front Power Outlet
7	20A	PASS	P/SEAT PASS	Passenger Manual Switch
8	10A		HTD MIRR	Driver/Passenger Power Outside Mirror, ECM/PCM, A/C Control Module
9	25A	AMP	AMP	AMP, JBL AMP, DC-DC Converter (AMP)
10	25A		WIPER FRT	ICM Relay Box (Rain Sensor Relay), Multifunction Switch, E/R Fuse & Relay Box (RLY. 7), Front Wiper Motor
11	7.5A		A/CON	E/R Fuse & Relay Box (RLY. 4), EMS Box (Fuel Heater Relay), Diesel Box (PTC Heater Relay #2/#3), A/C Control Module
12	15A	HTD STRG	STEERING WHEEL HEATER	Steering Wheel Heater

No.	Fuse rating	Symbol	Fuse Name	Protected component
13	25A	LH	P/WDW LH	Power Window LH Relay, Power Window Main Switch, Driver/Passenger Safety Power Window Module, Rear Safety Power Window Module LH, Rear Power Window Switch LH
14	10A		PDM 1	Tail Gate Open Relay, Trunk Lid Latch (SEDAN), Power Tail Gate Latch/Tail Gate Latch (WAGON), ICM Relay Box (Fuel Filler Lock/Unlock Relay)
15	30A	DRV	P/SEAT DRV	Driver IMS Module, Driver Manual Switch
16	7.5A	MODULE 2	MODULE 2	BCM, Immobilizer Module, DC-DC Converter (Audio/AMP), Audio, Electro Chromic Mirror, Lane Keeping Assist Module, A/C Control Module, Head Lamp LH/RH, Driver IMS Module, Auto Head Lamp Leveling Device Module, Portable Lamp, Head Lamp Leveling Device Actuator LH/RH, Rear Seat Warmer LH/RH, Tire Pressure Monitoring Module, Driver/Passenger CCS Control Module, ATM Shift Lever IND., Console Switch, Driver/Passenger Seat Warmer Modul
17	15A		WIPER RR	Rear Wiper Relay, Rear Wiper Motor, Multifunction Switch, Rear Curtain Module
18	10A	STOP LP	STOP LP	Stop Lamp Switch
19	25A	RH	P/WDW RH	Power Window RH Relay, Power Window Main Switch, Passenger Power Window Switch, Driver/Passenger Safety Power Window Module, Rear Safety Power Window Module RH, Rear Power Window Switch RH
20	10A	2	PDM 2	Smart Key Control Module, Start/Stop Button Switch, Immobilizer Module
21	7.5A	MODULE 5	MODULE 5	Driver/Passenger Smart Key Outside Handle, Driver/Passenger Power Outside Mirror, Active Air Flap Unit, Rear Seat Warmer Switch LH/RH, Auto Light & Photo Sensor, Sport Mode Switch, Key Solenoid

No.	Fuse rating	Symbol	Fuse Name	Protected component
22	20A	IG1	IG1	E/R Fuse & Relay Box (Fuse - F27, F28, F29, F30, F31)
23	10A	MODULE 6	MODULE 6	Instrument Cluster, Front Seat Warmer Switch LH/RH, Adaptive Front Lighting Module, Electric Parking Brake Module
24	10A	MDPS	MDPS	EPS Control Module
25	20A		DR LOCK	Door Lock/Unlock Relay, ICM Relay Box (Dead Lock Relay), Driver/Passenger Door Lock Actuator, Rear Door Lock Actuator LH/RH
26	15A	FRT	S/HEATER FRT	Driver/Passenger CCS Control Module, Driver/Passenger Seat Warmer Modul
27	10A	INTERIOR LAMP	INTERIOR LAMP	Driver/Passenger Door Lamp, Overhead Console Lamp, Portable Lamp, Room Lamp, Glove Box Lamp, Luggage Lamp, Driver/Passenger Foot Lamp, Trunk Room Lamp, Rear Personal Lamp LH/RH, Vanity Lamp LH/RH
28	15A	MULTI MEDIA	MULTI MEDIA	Audio, A/V & Navigation Head Unit, DC-DC Converter (Audio)
29	15A		A/BAG	SRS Control Module
30	10A	CURTAIN	CURTAIN	Rear Curtain Module
31	7.5A	MEMORY 1	MEMORY 1	Instrument Cluster, Tire Pressure Monitoring Module, Rear Curtain Module, Tilt Sensor, A/C Control Module, BCM, Ultrasonic Instrusion Protection Sensor, Siren, Driver IMS Module, Power Outside Mirror Switch
32	7.5A	IND	A/BAG IND	Instrument Cluster
33	7.5A	3	PDM 3	Smart Key Control Module

No.	Fuse rating	Symbol	Fuse Name	Protected component
34	10A	RR	S/HEATER RR	Rear Seat Warmer Module LH/RH
35	7.5A	MEMORY 2	MEMORY 2	RF Receiver
36	10A	1	PDM 1	Smart Key Control Module
37	7.5A		START	W/O Button Start : E/R Fuse & Relay Box (RLY. 8), Ignition Lock Switch, Transaxle Range Switch With Button Start : ECM/PCM, Transaxle Range Switch
38	20A		SUNROOF	Panorama Sunroof

Engine compartment main fuse panel

No.		Fuse rating	Symbol	Protected component
MULTI FUSE	1	80A	MDPS	EPS Control Module
	2	60A	B+1	I/P Junction Box (IPS 0 (4CH), IPS 1 (4CH), IPS 2 (2CH), Fuse - F13/F14/F19/F20/F21/F26/F36)
	3	40A	1 ABS	ESP Control Module, Multipurpose Check Connector
	4	40A	2 ABS	ESP Control Module, Multipurpose Check Connector
	5	40A	IG2	RLY. 9 (Start Relay), Ignition Switch (W/O Button Start), RLY. 6 (PDM 4 (IG2) Relay, With Button Start)
	6	40A		RLY. 4 (Blower Relay)
	7	40A	RR HTD	RLY. 11 (Rear Defogger Relay)
	8	60A	B+2	I/P Junction Box (IPS 3 (4CH), IPS 4 (4CH), Fuse - F2/F7/F9/F15)
FUSE	9	30A	AMP	DC-DC Converter (AMP)
	10	30A	EPB1	Electric Parking Brake Module
	11	30A	EPB2	Electric Parking Brake Module
	12	40A(GSL) 50A(DSL)		RLY. 1 (C/FAN LO Relay), RLY. 2 (C/FAN HI Relay)
	13	15A		ICM Relay Box (Front Deicer Relay)

No.		Fuse rating	Symbol	Protected component
FUSE	14	15A		RLY. 5 (Horn Relay), ICM Relay Box (Front Deicer Relay)
	15	15A	STOP LP	RLY. 12 (HAC Relay), Stop Signal Relay
	16	20A		ICM Relay Box (Head Lamp Washer Relay)
	17	20A		D4FD & A/T : TCM
	18	40A	IG1	W/O Button Start : Ignition Switch, With Button Start : RLY. 8 (PDM 2 (ACC) Relay)/RLY. 10 (PDM 3 (IG1) Relay
	19	40A		EMS Box
	20	50A	B+3	I/P Junction Box (Leak Current Autocut Device, Fuse - F18/F25/F30/F34/F38)
	21	10A	A/CON SW	A/C Control Module
	22	10A		PCM/ECM
	23	15A		A/T - TCM (D4FD), Transaxle Range Switch
	24	10A	B/UP LP	M/T - Back-Up Lamp Switch, A/T - Rear Combination Lamp (IN) LH/RH, Rear Curtain Module, A/V & Navigation Head Unit, Electro Chromic Mirror, IPS Control Module
	25	15A		RLY. 9 (D4FD, Start Relay), ECM/PCM, Air Flow Sensor (D4FD)
	26	10A	3 (ABS)	ESP Control Module

No.		Fuse rating	Symbol	Protected component
FUSE	27	15A	IGN COIL 2	G4FD/G4NC - Ignition Coil #1/ #2/ #3/ #4, Condenser
	28	15A	F/PUMP	Fuel Pump Relay
	29	15A		G4FD : ECM G4NA/G4NC : PCM (A/T), ECM (M/T)
	30	10A	SPARE	SPARE
	31	10A	INJECTOR	G4NA - Injector #1/#2/#3/#4
	32	10A		G4FD : ECM G4NA : Fuel Pump Relay G4NC : Fuel Pump Relay, PCM (A/T), ECM (M/T) D4FD : Oil Level Sensor, Fuel Pressure Regulating Valve
	33	20A	IGN COIL1	G4NA : Ignition Coil #1/#2/#3/#4, Condenser
	34	20A		G4FD/D4FD : ECM G4NA/G4NC : PCM (A/T), ECM (M/T)
	35	10A	SENSOR 2	G4FD : Oil Control Valve #1/ #2, Oil Level Sensor, E/R Fuse & Relay Box (RLY. 1) G4NA/G4NC : Oil Control Valve #1/ #2, Camshaft Position Sensor (Intake/Exhaust), E/R Fuse & Relay Box (RLY. 1) D4FD : E/R Fuse & Relay Box (RLY. 1), Diesel Box (PTC Heater Relay#1), Lambda Sensor, VGT Control Solenoid Valve
	36	10A	SENSOR 1	G4FD : Oxygen Sensor (UP/DOWN), Variable Intake Solenoid Valve, Purge Control Solenoid Valve G4NA/G4NC : Oxygen Sensor (UP/DOWN), Variable Intake Solenoid Valve, Purge Control Solenoid Valve D4FD : Camshaft Position Sensor, EGR Cooling Bypass Solenoid Valve, Diesel Box (Glow Relay)

No.	Symbol	Relay Name	Type
37	LO	C/FAN LO RELAY	PLUG MICRO
38	HI	C/FAN HI RELAY	PLUG MICRO
39	ESS	ESS RELAY	PLUG MICRO
40		BLOWER RELAY	PLUG MICRO
41		HORN RELAY	PLUG MICRO
42	4 (IG2)	PDM 4 (IG2) RELAY	PLUG MICRO
43		FRONT WIPER RELAY	PLUG MICRO
44	2 (ACC)	PDM 2 (ACC) RELAY	PLUG MICRO
		BURGLAR ALARM HORN RELAY	PLUG MICRO
45	1	START RELAY	PLUG MICRO
46	3 (IG1)	PDM 3 (IG1) RELAY	PLUG MICRO
47	RR HTD	RR HTD RELAY	PLUG MINI
48	HAC	HAC RELAY	PLUG MICRO

Engine compartment sub fuse panel (Diesel Engine)

Circuit

No.	Fuse Name	Fuse rating	Protected component
1	GLOW	80A	Glow Relay
2	PTC HEATER #1	50A	PTC Heater Relay #1
3	PTC HEATER #2	50A	PTC Heater Relay #2
4	PTC HEATER #3	50A	PTC Heater Relay #3

Relay Type

No.	Relay Name	Relay Type
1	Glow Relay	MINI PLUG
2	PTC Heater Relay #1	MINI PLUG
3	PTC Heater Relay #2	MINI PLUG
4	PTC Heater Relay #3	MINI PLUG

LIGHT BULBS

⚠ WARNING - Working on the lights

Prior to working on the light, firmly apply the parking brake, ensure that the ignition switch is turned to the "LOCK" position and turn off the lights to avoid sudden movement of the vehicle and burning your fingers or receiving an electric shock.

Use only the bulbs of the specified wattage.

⚠ CAUTION

Be sure to replace the burned-out bulb with one of the same wattage rating. Otherwise, it may cause damage to the fuse or electric wiring system.

⚠ CAUTION

If you don't have necessary tools, the correct bulbs and the expertise, consult an authorized HYUNDAI dealer. In many cases, it is difficult to replace vehicle light bulbs because other parts of the vehicle must be removed before you can get to the bulb. This is especially true if you have to remove the headlight assembly to get to the bulb(s). Removing/installing the headlight assembly can result in damage to the vehicle.

✻ NOTICE

After driving in heavy rain or washing the vehicle, headlight and taillight lenses could appear frosty. This condition is caused by the temperature difference between the lamp inside and outside. This is similar to the condensation on your windows inside your vehicle during rain and doesn't indicate a problem with your vehicle. If the water leaks into the lamp bulb circuitry, have the vehicle checked by an authorized HYUNDAI dealer.

Headlight, position light, turn signal light and front fog light bulb replacement

(1) Headlight (Low)
(2) Smart cornering light
(3) Headlight (High)
(4) Front turn signal light
(5) Position light
(6) Dedicated lamp (DRL) (if equipped)
(7) Front fog light (if equipped)

Headlight (Low/High), smart cornering light and turn signal light

1. Turn off the engine and open the hood.
2. Remove the front bumper.
3. Remove the headlight assembly from the body of the vehicle. If you can reach the bulb without removing the headlight assembly, you do not need to do step 2 and 3.
4. Disconnect the power connector(s) from the back of the headlight assembly.

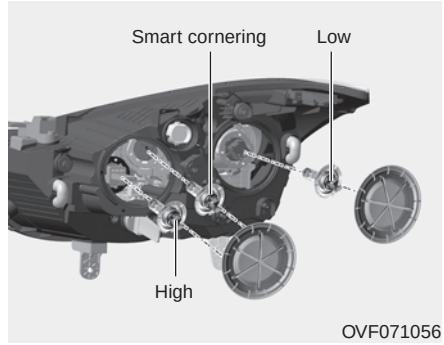

Headlight (Low/High) and Smart cornering light

5. Remove the headlight bulb cover by turning it counterclockwise.
6. Disconnect the headlight bulb socket-connector.
7. Remove the socket from the assembly by turning the socket counterclockwise until the tabs on the socket align with the slots on the assembly.
8. Pull the bulb out of the socket.
9. Insert a new bulb into the socket.
10. Install the socket in the assembly by aligning the tabs on the socket with the slots in the assembly. Push the socket into the assembly and turn the socket clockwise.
11. Connect the headlight bulb socket-connector.
12. Install the headlight bulb cover by turning it clockwise.

✻ NOTICE

If the headlight aiming adjustment is necessary after the headlight assembly is reinstalled, consult an authorized HYUNDAI dealer.

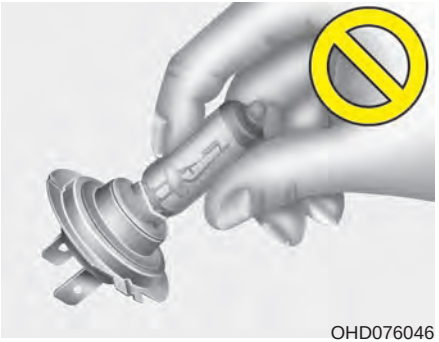

OHD076046

⚠ WARNING - Halogen bulbs

- **Halogen bulbs contain pressurized gas that will produce flying pieces of glass if broken.**
- **Always handle them carefully, and avoid scratches and abrasions. If the bulbs are lit, avoid contact with liquids. Never touch the glass with bare hands. Residual oil may cause the bulb to overheat and burst when lit. A bulb should be operated only when installed in a headlight.**
- **If a bulb is damaged or cracked, replace it immediately and carefully dispose of it.**
- **Wear eye protection when changing a bulb. Allow the bulb to cool down before handling it.**

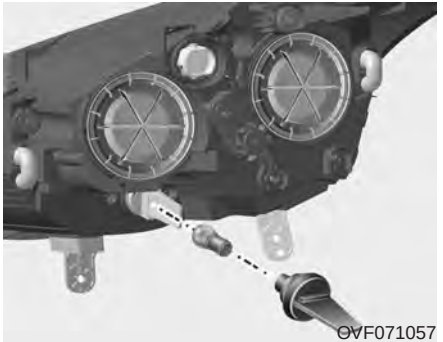

OVF071057

Turn signal light

Follow the steps 1 to 4 from the previous page.

5. Remove the socket from the assembly by turning the socket counterclockwise until the tabs on the socket align with the slots on the assembly.
6. Remove the bulb from the socket by pressing it in and rotating it counterclockwise until the tabs on the bulb align with the slots in the socket. Pull the bulb out of the socket.
7. Insert a new bulb by inserting it into the socket and rotating it until it locks into place.
8. Install the socket in the assembly by aligning the tabs on the socket with the slots in the assembly. Push the socket into the assembly and turn the socket clockwise.

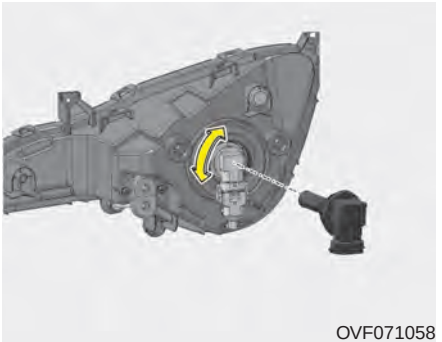

OVF071058

Front fog light bulbs

1. Turn off the engine.
2. Remove the under cover by rotating the screws.
3. Reach your hand into the back of the front bumper.
4. Disconnect the power connector from the socket.
5. Remove the bulb-socket from the housing by turning the socket counter clockwise until the tabs on the socket align with the slots on the housing.
6. Install a new bulb-socket into the housing by aligning the tabs on the socket with the slots in the housing. Push the socket into the housing and turn the socket clockwise.
7. Connect the power connector to the socket.

Headlight (HID type), position light and dedicated lamp

If the light bulb does not operate, have the vehicle checked by an authorized HYUNDAI dealer.

⚠ WARNING - HID Headlight low beam (if equipped)

Do not attempt to replace or inspect the low beam (XENON bulb) due to electric shock danger. If the low beam (XENON bulb) is not working, have your vehicle checked by an authorized HYUNDAI Dealer.

✻ NOTICE

HID lamps have superior performance vs. halogen bulbs. HID lamps are estimated by the manufacturer to last twice as long or longer than halogen bulbs depending on their frequency of use. They will probably require replacement at some point in the life of the vehicle. Cycling the headlamps on and off more than typical use will shorten HID lamps life. HID lamps do not fail in the same manner as halogen incandescent lamps. If a headlamp goes out after a period of operation but will immediately relight when the headlamp switch is cycled it is likely the HID lamp needs to be replaced. HID lighting components are more complex than conventional halogen bulbs thus have higher replacement cost.

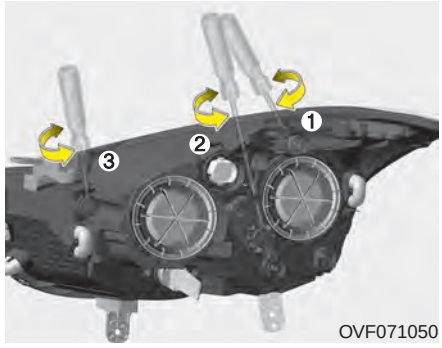

Headlight and front fog light aiming (for Europe)

Headlight aiming

1. Inflate the tires to the specified pressure and remove any loads from the vehicle except the driver, spare tire, and tools.
2. The vehicle should be placed on a flat floor.
3. Draw vertical lines (Vertical lines passing through respective head lamp centers) and a horizontal line (Horizontal line passing through center of head lamps) on the screen.
4. With the head lamp and battery in normal condition, aim the head lamps so the brightest portion falls on the horizontal and vertical lines.

5. To aim the low beam left or right, turn the driver (1) clockwise or counterclockwise. To aim the low beam up or down, turn the driver (2) clockwise or counterclockwise.

   To aim the high beam up or down, turn the driver (3) clockwise or counterclockwise.

AFLS type

1. Turn off the engine
2. Turn the light switch to the low beam position.
3. Position the tires straight ahead with the steering wheel.
4. Turn on the engine.
5. Inflate the tires to the specified pressure and remove any loads from the vehicle except the driver, spare tire, and tools.
6. The vehicle should be placed on a flat floor.
7. Draw vertical lines (Vertical lines passing through respective head lamp centers) and a horizontal line (Horizontal line passing through center of head lamps) on the screen.
8. With the head lamp and battery in normal condition, aim the head lamps so the brightest portion falls on the horizontal and vertical lines.
9. To aim the low beam left or right, turn the driver (1) clockwise or counterclockwise. To aim the low beam up or down, turn the driver (2) clockwise or counterclockwise. To aim the high beam up or down, turn the driver (3) clockwise or counterclockwise.

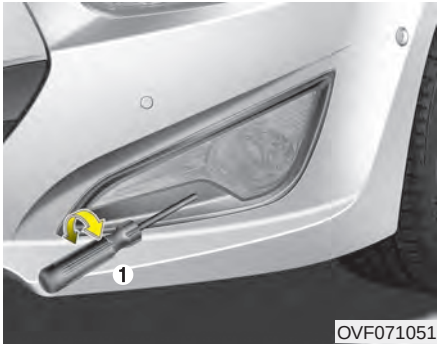

Front fog light aiming

The front fog lamp can be aimed as the same manner of the head lamps aiming.

With the front fog lamps and battery normal condition, aim the front fog lamps. To aim the front fog lamp up or down, turn the driver (1) clockwise or counterclockwise.

Aiming point

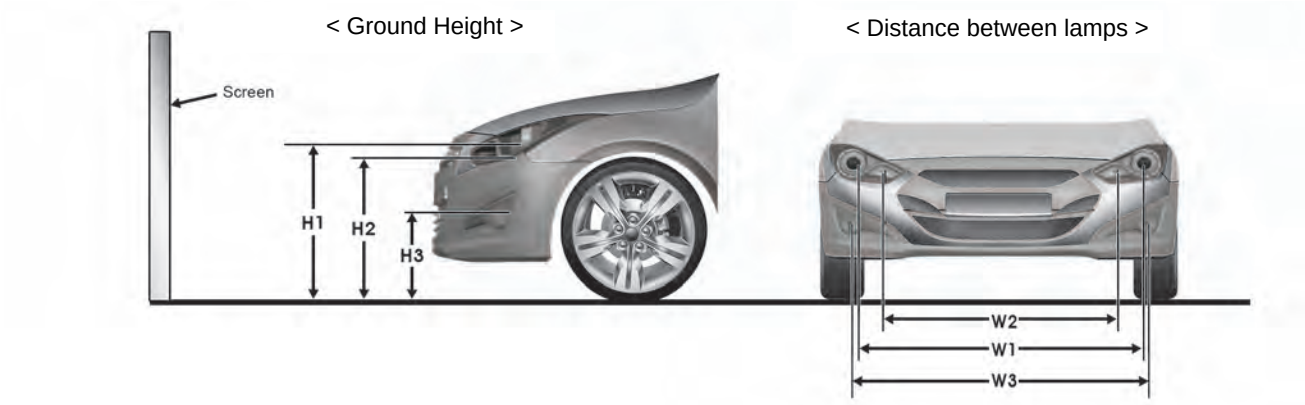

H1 : Height between the head lamp bulb center and ground (Low beam)
H2 : Height between the head lamp bulb center and ground (High beam)
H3 : Height between the fog lamp bulb center and ground
W1 : Distance between the two head lamp bulbs centers (Low beam)
W2 : Distance between the two head lamp bulbs centers (High beam)
W3 : Distance between the two fog lamp bulbs centers

Unit: mm (in)

Vehicle condition	H1	H2	H3	W1	W2	W3
Without driver	736 (28.9)	688 (27.0)	393 (15.4)	1,472 (57.9)	1,186 (46.6)	1508 (59.3)
With driver	728 (28.6)	680 (26.7)	385 (15.1)	1,472 (57.9)	1,186 (46.6)	1508 (59.3)

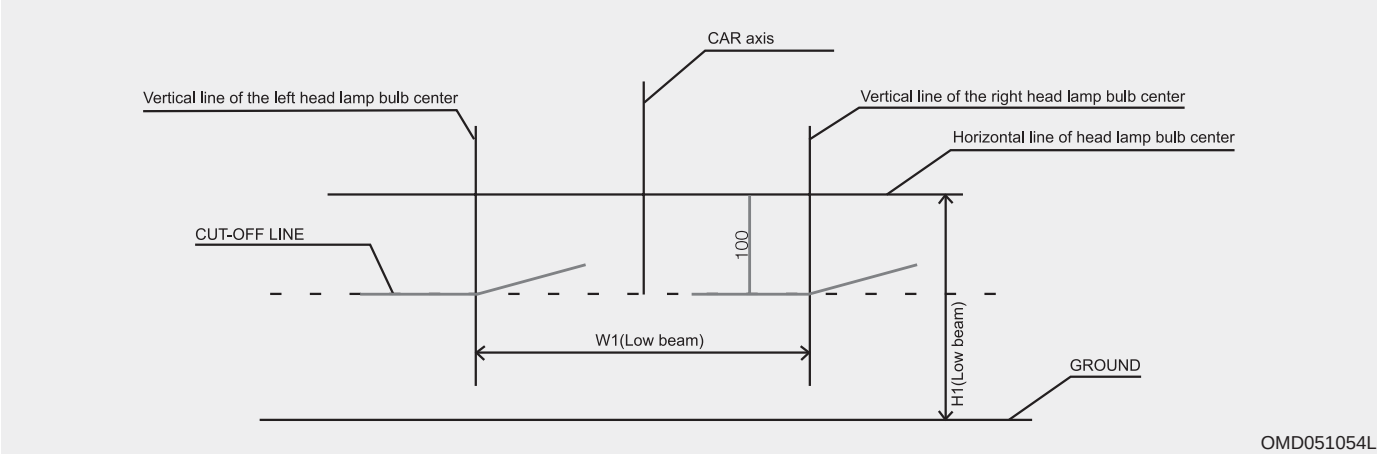

Head lamp low beam (driver's side)

1. Turn the low beam on without driver aboard.
2. The cut-off line should be projected in the cut-off line shown in the picture.
3. When aiming the low beam, vertical aiming should be adjusted after adjusting the horizontal aiming.
4. If head lamp leveling device is equipped, adjust the head lamp leveling device switch with 0 positions.

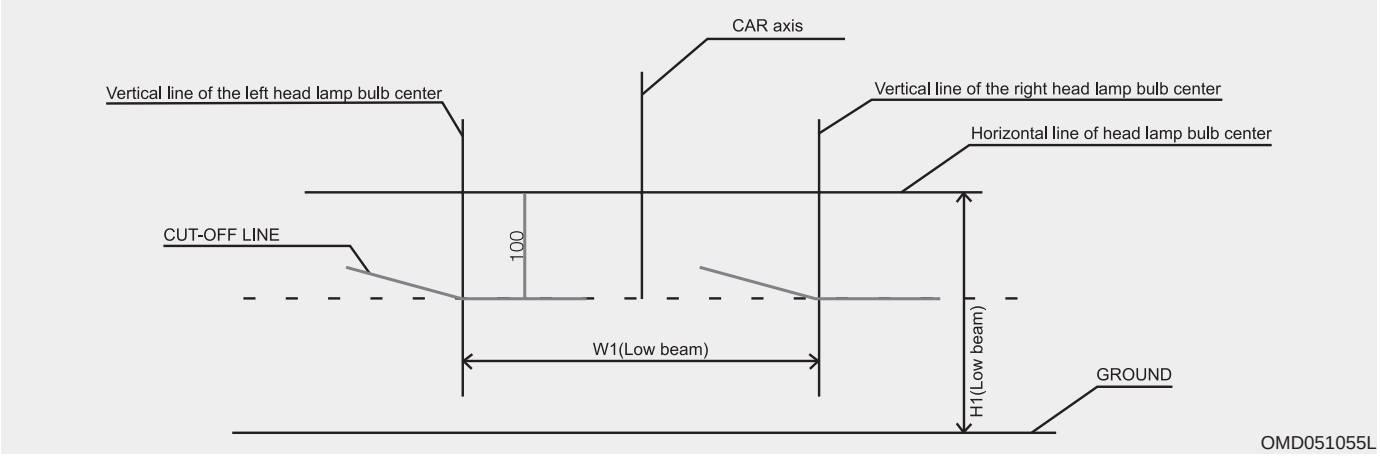

Head lamp low beam (front passenger's side)

1. Turn the low beam on without driver aboard.
2. The cut-off line should be projected in the cut-off line shown in the picture.
3. When aiming the low beam, vertical aiming should be adjusted after adjusting the horizontal aiming.
4. If head lamp leveling device is equipped, adjust the head lamp leveling device switch with 0 positions.

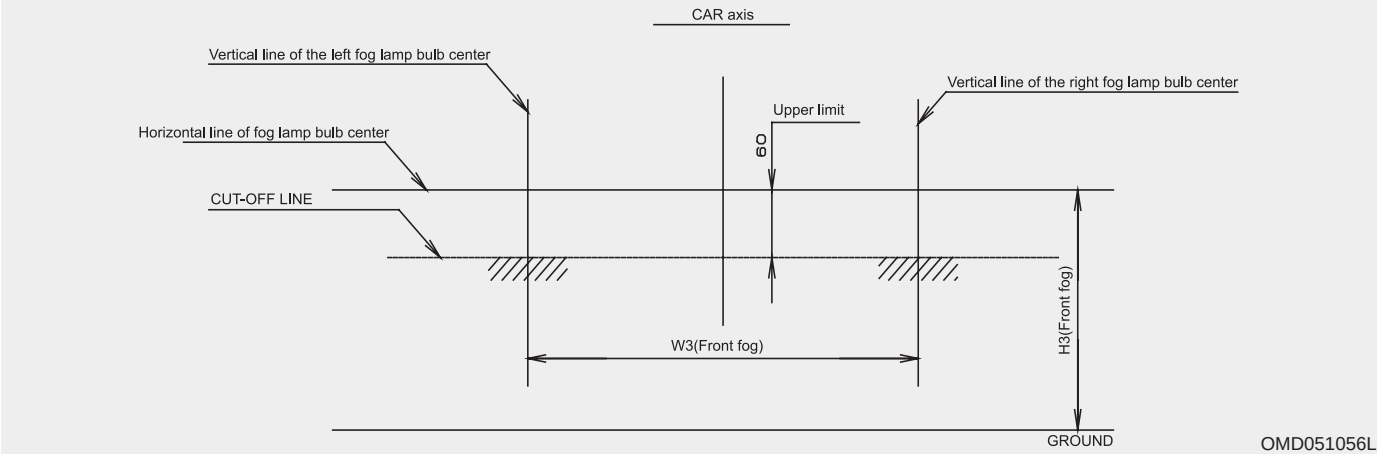

Front fog light

1. Turn the front fog lamp on without the driver aboard.
2. The cut-off line should be projected in the allowable range (shaded region).

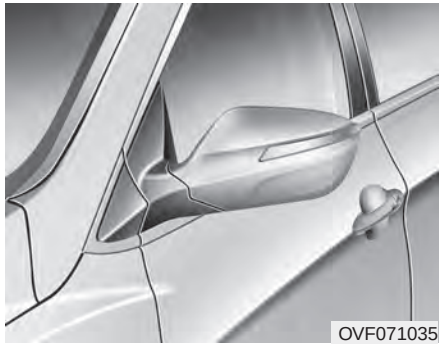

Side repeater light bulb replacement

If the light bulb does not operate, have the vehicle checked by an authorized HYUNDAI dealer.

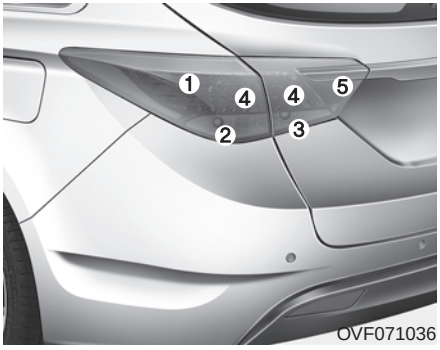

Rear combination light bulb replacement

(1) Stop light
(2) Rear turn signal light
(3) Back-up light
(4) Tail light
(5) Rear fog light (if equipped)

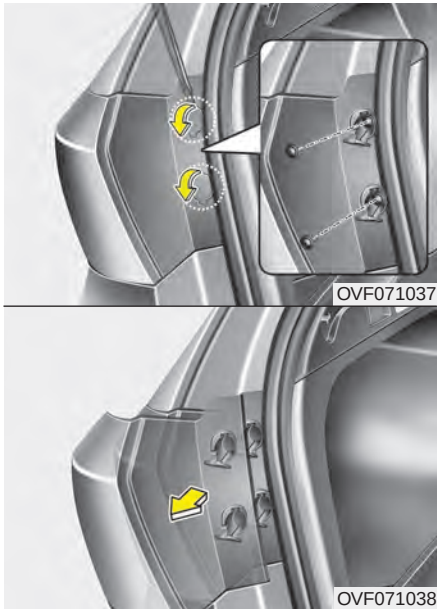

Outside light

Rear turn signal light

1. Turn off the engine.
2. Open the tailgate.
3. Remove the cover.

4. Loosen the light assembly retaining screws with a cross-tip screwdriver.
5. Remove the rear combination light assembly from the body of the vehicle.

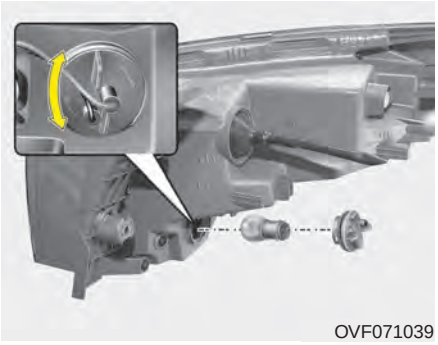
OVF071039

6. Remove the socket from the assembly by turning the socket counterclockwise until the tabs on the socket align with the slots on the assembly.
7. Remove the bulb from the socket by pressing it in and rotating it counter-clockwise until the tabs on the bulb align with the slots in the socket. Pull the bulb out of the socket.
8. Insert a new bulb by inserting it into the socket and rotating it until it locks into place.
9. Install the socket in the assembly by aligning the tabs on the socket with the slots in the assembly. Push the socket into the assembly and turn the socket clockwise.
10. Reinstall the light assembly to the body of the vehicle.

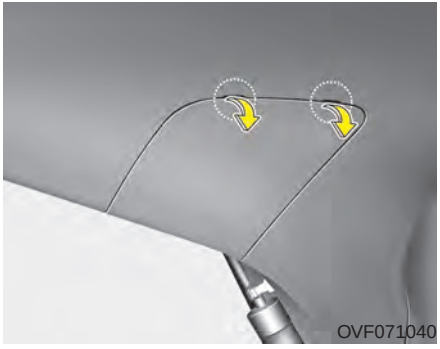
OVF071040

Inside light

1. Turn off the engine.
2. Open the tailgate.
3. Remove the service cover using a flat-blade screwdriver.

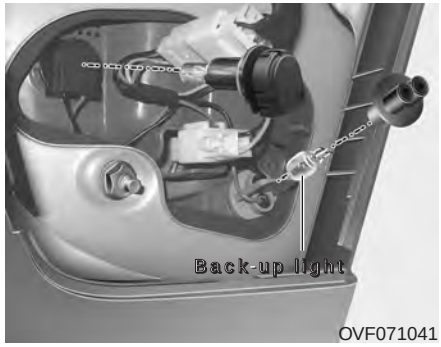

OVF071041

Back-up light

4. Remove the socket from the assembly by turning the socket counterclockwise until the tabs on the socket align with the slots on the assembly.
5. Remove the bulb from the socket by pressing it in and rotating it counterclockwise until the tabs on the bulb align with the slots in the socket. Pull the bulb out of the socket.
6. Insert a new bulb by inserting it into the socket and rotating it until it locks into place.
7. Install the socket in the assembly by aligning the tabs on the socket with the slots in the assembly. Push the socket into the assembly and turn the socket clockwise.
8. Install the service cover by putting it into the service hole.

OVF071041

Rear fog light

4. Remove the bulb-socket from the assembly by turning the socket counter clockwise until the tabs on the socket align with the slots on the assembly.
5. Install the new bulb-socket into the assembly by aligning the tabs on the socket with the slots in the housing. Push the socket into the assembly and turn the socket clockwise.

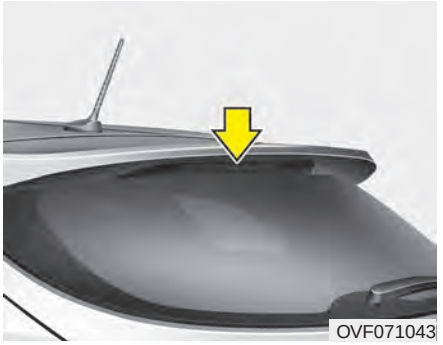

High mounted stop light bulb replacement (if equipped)

If the light does not operate, have the vehicle checked by an authorized HYUNDAI dealer.

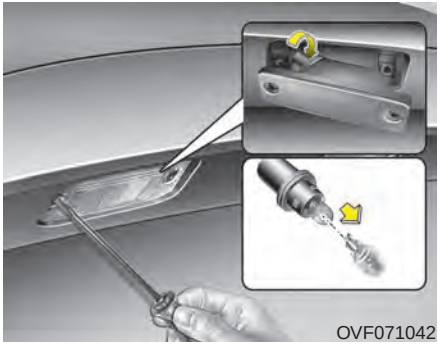

License plate light bulb replacement

1. Turn off the engine.
2. Loosen the retaining screws with a philips head screwdriver.
3. Remove the bulb assembly by turning it counterclockwise.
4. Remove the bulb by pulling it straight out.
5. Install a new bulb.
6. Reinstall the bulb assembly securely with the retaining screws.

Map lamp

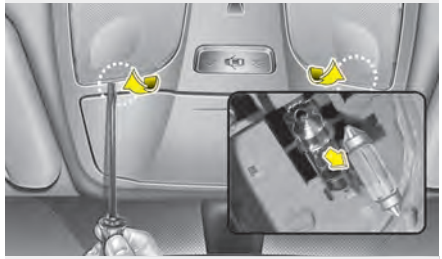

Vanity mirror lamp

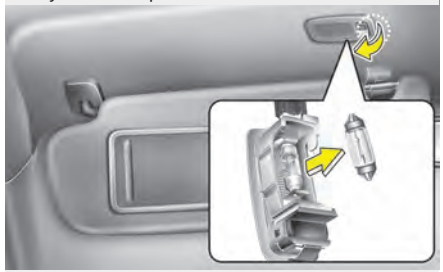

Glove box lamp

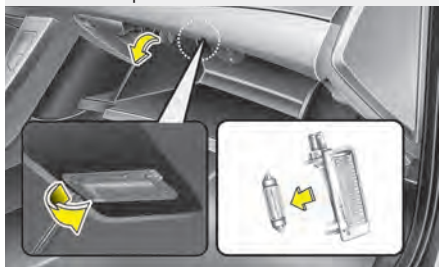

Luggage room lamp

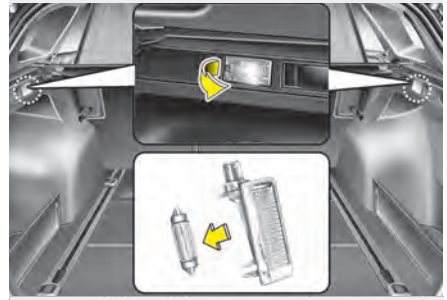

Room lamp

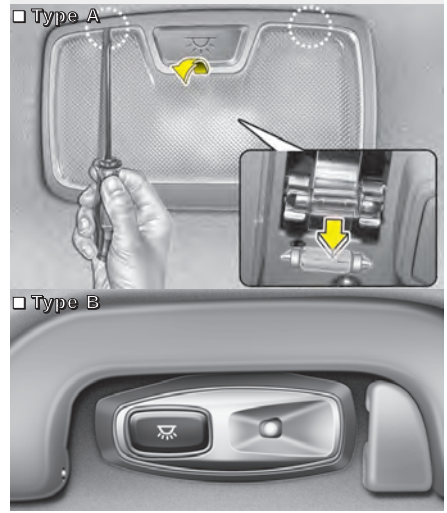

OVF071046/OXM079041/OVF071044/OVF071045/OVF071047/OHG070038

Interior light bulb replacement

Map lamp, vanity mirror lamp, room lamp (Type A), luggage room lamp and glove box lamp

1. Using a flat-blade screwdriver, gently pry the lens from the interior light housing.
2. Remove the bulb by pulling it straight out.

⚠ WARNING

Prior to working on the Interior Lights, ensure that the "OFF" button is pressed to avoid burning your fingers or receiving an electric shock.

3. Install a new bulb in the socket.
4. Align the lens tabs with the interior light housing notches and snap the lens into place.

⚠ CAUTION

Be careful not to dirty or damage lens, lens tab, and plastic housings.

Room lamp (Type B)

If the light bulb does not operate, have the vehicle checked by an authorized HYUNDAI dealer.

APPEARANCE CARE

Exterior care

Exterior general caution

It is very important to follow the label directions when using any chemical cleaner or polish. Read all warning and caution statements that appear on the label.

Finish maintenance

Washing

To help protect your vehicle's finish from rust and deterioration, wash it thoroughly and frequently at least once a month with lukewarm or cold water.

If you use your vehicle for off-road driving, you should wash it after each off-road trip. Pay special attention to the removal of any accumulation of salt, dirt, mud, and other foreign materials. Make sure the drain holes in the lower edges of the doors and rocker panels are kept clear and clean.

Insects, tar, tree sap, bird droppings, industrial pollution and similar deposits can damage your vehicle's finish if not removed immediately.

Even prompt washing with plain water may not completely remove all these deposits.

A mild soap, safe for use on painted surfaces, may be used.

After washing, rinse the vehicle thoroughly with lukewarm or cold water. Do not allow soap to dry on the finish.

⚠ CAUTION

- ***Do not use strong soap, chemical detergents or hot water, and do not wash the vehicle in direct sunlight or when the body of the vehicle is warm.***
- ***Be careful when washing the side windows of your vehicle. Especially, with high-pressure water, water may leak through the windows and wet the interior.***
- ***To prevent damage to the plastic parts and lamps, do not clean with chemical solvents or strong detergents.***

⚠ WARNING - Wet brakes

After washing the vehicle, test the brakes while driving slowly to see if they have been affected by water. If braking performance is impaired, dry the brakes by applying them lightly while maintaining a slow forward speed.

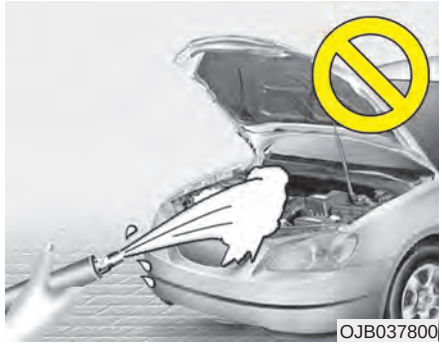

⚠ **CAUTION**

- ***Water washing in the engine compartment including high pressure water washing may cause the failure of electrical circuits located in the engine compartment.***
- ***Never allow water or other liquids to come in contact with electrical/electronic components inside the vehicle as this may damage them.***

Waxing

Wax the vehicle when water will no longer bead on the paint.

Always wash and dry the vehicle before waxing. Use a good quality liquid or paste wax, and follow the manufacturer's instructions. Wax all metal trim to protect it and to maintain its luster.

Removing oil, tar, and similar materials with a spot remover will usually strip the wax from the finish. Be sure to re-wax these areas even if the rest of the vehicle does not yet need waxing.

⚠ **CAUTION**

- ***Wiping dust or dirt off the body with a dry cloth will scratch the finish.***
- ***Do not use steel wool, abrasive cleaners, or strong detergents containing highly alkaline or caustic agents on chrome-plated or anodized aluminum parts. This may result in damage to the protective coating and cause discoloration or paint deterioration.***

Finish damage repair

Deep scratches or stone chips in the painted surface must be repaired promptly. Exposed metal will quickly rust and may develop into a major repair expense.

✻ **NOTICE**

If your vehicle is damaged and requires any metal repair or replacement, be sure the body shop applies anti-corrosion materials to the parts repaired or replaced.

Bright-metal maintenance

- To remove road tar and insects, use a tar remover, not a scraper or other sharp object.
- To protect the surfaces of bright-metal parts from corrosion, apply a coating of wax or chrome preservative and rub to a high luster.
- During winter weather or in coastal areas, cover the bright metal parts with a heavier coating of wax or preservative. If necessary, coat the parts with non-corrosive petroleum jelly or other protective compound.

Underbody maintenance

Corrosive materials used for ice and snow removal and dust control may collect on the underbody. If these materials are not removed, accelerated rusting can occur on underbody parts such as the fuel lines, frame, floor pan and exhaust system, even though they have been treated with rust protection.

Thoroughly flush the vehicle underbody and wheel openings with lukewarm or cold water once a month, after off-road driving and at the end of each winter. Pay special attention to these areas because it is difficult to see all the mud and dirt. It will do more harm than good to wet down the road grime without removing it. The lower edges of doors, rocker panels, and frame members have drain holes that should not be allowed to clog with dirt; trapped water in these areas can cause rusting.

⚠ WARNING

After washing the vehicle, test the brakes while driving slowly to see if they have been affected by water. If braking performance is impaired, dry the brakes by applying them lightly while maintaining a slow forward speed.

Aluminum wheel maintenance

The aluminum wheels are coated with a clear protective finish.

- Do not use any abrasive cleaner, polishing compound, solvent, or wire brushes on aluminum wheels. They may scratch or damage the finish.
- Use only a mild soap or neutral detergent, and rinse thoroughly with water. Also, be sure to clean the wheels after driving on salted roads. This helps prevent corrosion.
- Avoid washing the wheels with high-speed car wash brushes.
- Do not use any acid detergent. It may damage and corrode the aluminum wheels coated with a clear protective finish.

Corrosion protection

Protecting your vehicle from corrosion

By using the most advanced design and construction practices to combat corrosion, we produces cars of the highest quality. However, this is only part of the job. To achieve the long-term corrosion resistance your vehicle can deliver, the owner's cooperation and assistance is also required.

Common causes of corrosion

The most common causes of corrosion on your car are:

- Road salt, dirt and moisture that is allowed to accumulate underneath the car.
- Removal of paint or protective coatings by stones, gravel, abrasion or minor scrapes and dents which leave unprotected metal exposed to corrosion.

High-corrosion areas

If you live in an area where your car is regularly exposed to corrosive materials, corrosion protection is particularly important. Some of the common causes of accelerated corrosion are road salts, dust control chemicals, ocean air and industrial pollution.

Moisture breeds corrosion

Moisture creates the conditions in which corrosion is most likely to occur. For example, corrosion is accelerated by high humidity, particularly when temperatures are just above freezing. In such conditions, the corrosive material is kept in contact with the car surfaces by moisture that is slow to evaporate.

Mud is particularly corrosive because it is slow to dry and holds moisture in contact with the vehicle. Although the mud appears to be dry, it can still retain the moisture and promote corrosion.

High temperatures can also accelerate corrosion of parts that are not properly ventilated so the moisture can be dispersed. For all these reasons, it is particularly important to keep your car clean and free of mud or accumulations of other materials. This applies not only to the visible surfaces but particularly to the underside of the car.

To help prevent corrosion

You can help prevent corrosion from getting started by observing the following:

Keep your car clean

The best way to prevent corrosion is to keep your car clean and free of corrosive materials. Attention to the underside of the car is particularly important.

- If you live in a high-corrosion area — where road salts are used, near the ocean, areas with industrial pollution, acid rain, etc.—, you should take extra care to prevent corrosion. In winter, hose off the underside of your car at least once a month and be sure to clean the underside thoroughly when winter is over.
- When cleaning underneath the car, give particular attention to the components under the fenders and other areas that are hidden from view. Do a thorough job; just dampening the accumulated mud rather than washing it away will accelerate corrosion rather than prevent it. Water under high pressure and steam are particularly effective in removing accumulated mud and corrosive materials.
- When cleaning lower door panels, rocker panels and frame members, be sure that drain holes are kept open so that moisture can escape and not be trapped inside to accelerate corrosion.

Keep your garage dry

Don't park your car in a damp, poorly ventilated garage. This creates a favorable environment for corrosion. This is particularly true if you wash your car in the garage or drive it into the garage when it is still wet or covered with snow, ice or mud. Even a heated garage can contribute to corrosion unless it is well ventilated so moisture is dispersed.

Keep paint and trim in good condition

Scratches or chips in the finish should be covered with "touch-up" paint as soon as possible to reduce the possibility of corrosion. If bare metal is showing through, the attention of a qualified body and paint shop is recommended.

Bird droppings : Bird droppings are highly corrosive and may damage painted surfaces in just a few hours. Always remove bird droppings as soon as possible.

Don't neglect the interior

Moisture can collect under the floor mats and carpeting to cause corrosion. Check under the mats periodically to be sure the carpeting is dry. Use particular care if you carry fertilizers, cleaning materials or chemicals in the car.

These should be carried only in proper containers and any spills or leaks should be cleaned up, flushed with clean water and thoroughly dried.

Interior care

Interior general precautions

Prevent caustic solutions such as perfume and cosmetic oil from contacting the dashboard because they may cause damage or discoloration. If they do contact the dashboard, wipe them off immediately. See the instructions that follow for the proper way to clean vinyl.

⚠ CAUTION

Never allow water or other liquids to come in contact with electrical/electronic components inside the vehicle as this may damage them.

⚠ CAUTION

When cleaning leather products (steering wheel, seats etc.), use neutral detergents or low alcohol content solutions. If you use high alcohol content solutions or acid/alkaline detergents, the color of the leather may fade or the surface may get stripped off.

Cleaning the upholstery and interior trim

Vinyl

Remove dust and loose dirt from vinyl with a whisk broom or vacuum cleaner. Clean vinyl surfaces with a vinyl cleaner.

Fabric

Remove dust and loose dirt from fabric with a whisk broom or vacuum cleaner. Clean with a mild soap solution recommended for upholstery or carpets. Remove fresh spots immediately with a fabric spot cleaner. If fresh spots do not receive immediate attention, the fabric can be stained and its color can be affected. Also, its fire-resistant properties can be reduced if the material is not properly maintained.

⚠ CAUTION

Using anything but recommended cleaners and procedures may affect the fabric's appearance and fire-resistant properties.

Cleaning the lap/shoulder belt webbing

Clean the belt webbing with any mild soap solution recommended for cleaning upholstery or carpet. Follow the instructions provided with the soap. Do not bleach or re-dye the webbing because this may weaken it.

Cleaning the interior window glass

If the interior glass surfaces of the vehicle become fogged (that is, covered with an oily, greasy or waxy film), they should be cleaned with glass cleaner. Follow the directions on the glass cleaner container.

⚠ CAUTION

Do not scrape or scratch the inside of the rear window. This may result in damage to the rear window defroster grid.

EMISSION CONTROL SYSTEM

The emission control system of your vehicle is covered by a written limited warranty. Please see the warranty information contained in the Service Passport in your vehicle.

Your vehicle is equipped with an emission control system to meet all emission regulations.

There are three emission control systems which are as follows.

(1) Crankcase emission control system
(2) Evaporative emission control system
(3) Exhaust emission control system

In order to assure the proper function of the emission control systems, it is recommended that you have your car inspected and maintained by an authorized HYUNDAI dealer in accordance with the maintenance schedule in this manual.

Caution for the Inspection and Maintenance Test (With Electronic Stability Program (ESP) system)

- **To prevent the vehicle from misfiring during dynamometer testing, turn the Electronic Stability Program (ESP) system off by pressing the ESP switch.**
- **After dynamometer testing is completed, turn the ESP system back on by pressing the ESP switch again.**

1. Crankcase emission control system

The positive crankcase ventilation system is employed to prevent air pollution caused by blow-by gases being emitted from the crankcase. This system supplies fresh filtered air to the crankcase through the air intake hose. Inside the crankcase, the fresh air mixes with blow-by gases, which then pass through the PCV valve into the induction system.

2. Evaporative emission control System

The Evaporative Emission Control System is designed to prevent fuel vapors from escaping into the atmosphere.

Canister

Fuel vapors generated inside the fuel tank are absorbed and stored in the onboard canister. When the engine is running, the fuel vapors absorbed in the canister are drawn into the surge tank through the purge control solenoid valve.

Purge Control Solenoid Valve (PCSV)

The purge control solenoid valve is controlled by the Engine Control Module (ECM); when the engine coolant temperature is low during idling, the PCSV closes so that evaporated fuel is not taken into the engine. After the engine warms-up during ordinary driving, the PCSV opens to introduce evaporated fuel to the engine.

3. Exhaust emission control system

The Exhaust Emission Control System is a highly effective system which controls exhaust emissions while maintaining good vehicle performance.

Vehicle modifications

This vehicle should not be modified. Modification of your vehicle could affect its performance, safety or durability and may even violate governmental safety and emissions regulations.

In addition, damage or performance problems resulting from any modification may not be covered under warranty.

- If you use unauthorized electronic devices, it may cause the vehicle to operate abnormally, wire damage, battery discharge or fire. For your safety, do not use unauthorized electric devices.

Engine exhaust gas precautions (carbon monoxide)

- Carbon monoxide can be present with other exhaust fumes. Therefore, if you smell exhaust fumes of any kind inside your vehicle, have it inspected and repaired immediately. If you ever suspect exhaust fumes are coming into your vehicle, drive it only with all the windows fully open. Have your vehicle checked and repaired immediately.

⚠ WARNING - Exhaust

Engine exhaust gases contain carbon monoxide (CO). Though colorless and odorless, it is dangerous and could be lethal if inhaled. Follow the instructions following to avoid CO poisoning.

- Do not operate the engine in confined or closed areas (such as garages) any more than what is necessary to move the vehicle in or out of the area.
- When the vehicle is stopped in an open area for more than a short time with the engine running, adjust the ventilation system (as needed) to draw outside air into the vehicle.
- Never sit in a parked or stopped vehicle for any extended time with the engine running.
- When the engine stalls or fails to start, excessive attempts to restart the engine may cause damage to the emission control system.

Operating precautions for catalytic converters (if equipped)

⚠ WARNING - Fire

- **A hot exhaust system can ignite flammable items under your vehicle. Do not park, idle, or drive the vehicle over or near flammable objects, such as dry grass, paper, leaves, etc.**
- **The exhaust system and catalytic system are very hot while the engine is running or immediately after the engine is turned off. Keep away from the exhaust system and catalytic, you may get burned.**

  Also, do not remove the heat sink around the exhaust system, do not seal the bottom of the vehicle or do not coat the vehicle for corrosion control. It may present a fire risk under certain conditions.

Your vehicle is equipped with a catalytic converter emission control device.

Therefore, the following precautions must be observed:

- Use only UNLEADED FUEL for gasoline engine.
- Do not operate the vehicle when there are signs of engine malfunction, such as misfire or a noticeable loss of performance.
- Do not misuse or abuse the engine. Examples of misuse are coasting with the ignition off and descending steep grades in gear with the ignition off.
- Do not operate the engine at high idle speed for extended periods (5 minutes or more).
- Do not modify or tamper with any part of the engine or emission control system. All inspections and adjustments must be made by an authorized HYUNDAI dealer.
- Avoid driving with a extremely low fuel level. Running out of fuel cause the engine to misfire, damaging the catalytic converter.

Failure to observe these precautions could result in damage to the catalytic converter and to your vehicle. Additionally, such actions could void your warranties.

Diesel Particulate Filter (if equipped)

The Diesel Particulate Filter (DPF) system removes the soot emitted from the vehicle.

Unlike a disposable air filter, the DPF system automatically burns (oxidizes) and removes the accumulated soot according to the driving condition. In other words, the active burning by engine control system and high exhaust gas temperature caused by normal/high driving condition burns and removes the accumulated soot.

However, if the vehicle continues to be driven at low speed for long time, the accumulated soot may not be automatically removed because of low exhaust gas temperature. In this particular case, the amount of soot is out of detection limit, the soot oxidation process by engine control system may not happen and the malfunction indicator light may blink.

When the malfunction indicator light blinks, it may stop blinking by driving the vehicle at more than 60km/h (37 mph) or at more than second gear with 1500 ~ 2000 engine rpm for a certain time (for about 25 minutes).

If the malfunction indicator light continues to be blinked in spite of the procedure, please visit an authorized HYUNDAI dealer and then check the DPF system.

If you continue to drive with the malfunction indicator light blinking for a long time, the DPF system can be damaged and fuel consumption can be worsen.

⚠ CAUTION - Diesel Fuel (if equipped with DPF)

It is recommended to use the regulated automotive diesel fuel for diesel vehicle equipped with the DPF system.

If you use diesel fuel including high sulfur (more than 50 ppm sulfur) and unspecified additives, it can cause the DPF system to be damaged and white smoke can be emitted.

Dimensions / 8-2
Engine / 8-2
Bulb wattage / 8-3
Tires and wheels / 8-4
Weight and volume / 8-4
Recommended lubricants and capacities / 8-5
Vehicle identification number (VIN) / 8-8
Vehicle certification label / 8-8
Tire specification and pressure label / 8-9
Engine number / 8-9
E-mark label / 8-10

Specifications & Consumer information 8

DIMENSIONS

Item	mm (in)	
Overall length	4770 (187.7)	
Overall width	1815 (71.4)	
Overall height	1470 (57.8)	
Front tread	205/60R16	1591 (62.6)
	215/50R17	1579 (62.1)
	225/45R18	
Rear tread	205/60R16	1597 (62.8)
	215/50R17	1585 (62.4)
	225/45R18	
Wheelbase	2770 (109.0)	

ENGINE

Item	Gasoline 1.6	Gasoline 2.0	Diesel 1.7
Displacement cc (cu. in)	1591 (97.08)	1999 (121.9)	1685 (102.8)
Bore x Stroke mm (in.)	77x85.44 (3.03x3.36)	81x97 (3.18x3.81)	77.2x90 (3.04x3.54)
Firing order	1-3-4-2	1-3-4-2	1-3-4-2
No. of cylinders	4, In-line	4, In-line	4, In-line

BULB WATTAGE

Light Bulb			Wattage	Bulb type
Front	Headlights	Low	55 or 35 (HID or AFLS)	H7S or D1S
		High	55	H7L
	Smart cornering light		55	H7L
	Dedicated lamp		LED	LED
	Front turn signal lights		21	PY21W
	Position lights		LED	LED
	Side repeater lights		LED	LED
	Front fog lights		35	H8L
Rear	Rear fog light		21	H21W
	Stop and tail lights (Outside)		LED	LED
	Rear turn signal lights (Outside)		21	PY21W
	Tail light (Inside)		LED	LED
	Back-up lights (Inside)		16	W16W
	High mounted stop light		LED	LED
	License plate lights		5	W5W
Interior	Map lamps		8	FESTON
	Room lamps	Type A	10	FESTON
		Type B	LED	LED
	Luggage lamp		5	FESTON
	Glove box lamp		5	FESTON
	Vanity mirror lamps		5	FESTON

HID : High Intensity Discharge
AFLS : Adaptive Front-Lighting System

TIRES AND WHEELS

Item	Tire size	Wheel size	Inflation pressure bar (psi, kPa)				Wheel lug nut torque kg•m (lb•ft, N•m)
			Normal load		Maximum load		
			Front	Rear	Front	Rear	
Full size tire	205/60R16	7.0J×16	2.3 (33, 230)	2.3 (33, 230)	2.3 (33, 230)	2.3 (33, 230)	9~11 (65~79, 88~107)
	215/50R17	7.5Jx17	2.4 (35, 240)	2.4 (35, 240)	2.4 (35, 240)	2.4 (35, 240)	
	225/45R18	8.0Jx18					
Compact spare tire	T125/80D16	4.0Tx16	4.2 (60, 420)	4.2 (60, 420)	4.2 (60, 420)	4.2 (60, 420)	
	T135/80D17	4.0Tx17					

WEIGHT AND VOLUME

Item		Gasoline 1.6L	Gasoline 2.0L	Diesel 1.7L
Gross vehicle weight kg (lbs.)	M/T	2030 (4475)	2050 (4519)	2120 (4673)
	A/T	-	2080 (4585)	2150 (4739)
Luggage volume *l* (cu ft)	Min.	553 (19.5)		
	Max.	1719 (60.7)		

M/T : Manual transaxle
A/T : Automatic transaxle
Min. : Behind rear seat to upper edge of the seat back.
Max. : Behind front seat to roof.

RECOMMENDED LUBRICANTS AND CAPACITIES

To help achieve proper engine and powertrain performance and durability, use only lubricants of the proper quality. The correct lubricants also help promote engine efficiency that results in improved fuel economy.

These lubricants and fluids are recommended for use in your vehicle.

Lubricant				Volume	Classification
Engine oil *1 *2 (drain and refill) Recommends Shell HELIX Motor oils	Gasoline Engine	1.6L		3.3 *l* (3.48 US qt.)	**GDI engine** API Service SL or SM, ACEA A5 or above Use the engine oils approved by Hyundai Motor Company. Consult an authorized HYUNDAI dealer for details. **MPI engine** API Service SM, ILSAC GF-4 or above
		2.0L		4.0 *l* (4.22 US qt.)	
	Diesel Engine	1.7L	with DPF *3	5.3 *l* (5.60 US qt.)	ACEA C3
			without DPF *3	5.3 *l* (5.60 US qt.)	ACEA B4
Manual transaxle fluid	Gasoline Engine	1.6L		1.8 *l* ~ 1.9 *l* (1.90 ~ 2.01US qt.)	API GL-4, SAE 75W/85
		2.0L		1.9 *l* ~ 2.0 *l* (2.01 ~ 2.11 US qt.)	
	Diesel Engine	1.7L	High	1.8 *l* ~ 1.9 *l* (1.90 ~ 2.01US qt.)	
			Low	1.9 *l* ~ 2.0 *l* (2.01 ~ 2.11 US qt.)	
Automatic transaxle fluid	Gasoline Engine			7.1 *l* (7.50 US qt.)	MICHANG ATF SP-IV SK ATF SP-IV NOCA ATF SP-IV HYUNDAI genuine ATF SP-IV
	Diesel Engine			7.1 *l* (7.50 US qt.)	

*1 Refer to the recommended SAE viscosity numbers on 8-6 page.

*2 Engine oils labeled Energy Conserving Oil are now available. Along with other additional benefits, they contribute to fuel economy by reducing the amount of fuel necessary to overcome engine friction. Often, these improvements are difficult to measure in everyday driving, but in a year's time, they can offer significant cost and energy savings.

*3 Diesel Particulate Filter

Lubricant					Volume	Classification
Coolant	Gasoline Engine	1.6L			6.8 *l* (7.18 US qt.)	Mixture of antifreeze and distilled water (Ethylene glycol base coolant for aluminum radiator)
		2.0L	MT		7.1 *l* (7.50 US qt.)	
			AT	GDI	6.8 *l* (7.18 US qt.)	
				MPI	6.9 *l* (7.29 US qt.)	
	Diesel Engine				6.9 *l* (7.29 US qt.)	
Brake/clutch fluid					0.7~0.8 *l* (0.7~0.8 US qt.)	FMVSS116 DOT-3 or DOT-4
Fuel					70 *l* (18.49 US gal.)	Refer to “Fuel requirements” in section 1

Recommends Engine oil (For Europe)

Supplier	Product	
	Gasoline Engine (GDI)	Diesel Engine
SK	ZIC LD5W-30	ZIC LS 5W-30
Chevron	KIXX G1 LL	KIXX D1 5W-30
Total	QUARTZ HKS G-310	QUARTZ INEO MC3 5W-30
	QUARTZ INEO MC3 5W-30	
Shell	HELIX ULTRA AH-E 5W-30	HELIX ULTRA AP 5W-30
	HELIX ULTRA 5W-40	
Fuchs	TITAN SUPERSYN LONG LIFE 5W-30/40	

Recommended SAE viscosity number

⚠ CAUTION

Always be sure to clean the area around any filler plug, drain plug, or dipstick before checking or draining any lubricant. This is especially important in dusty or sandy areas and when the vehicle is used on unpaved roads. Cleaning the plug and dipstick areas will prevent dirt and grit from entering the engine and other mechanisms that could be damaged.

Engine oil viscosity (thickness) has an effect on fuel economy and cold weather operating (engine start and engine oil flowability). Lower viscosity engine oils can provide better fuel economy and cold weather performance, however, higher viscosity engine oils are required for satisfactory lubrication in hot weather. Using oils of any viscosity other than those recommended could result in engine damage.

When choosing an oil, consider the range of temperature your vehicle will be operated in before the next oil change. Proceed to select the recommended oil viscosity from the chart.

Temperature Range for SAE Viscosity Numbers

Temperature		°C	-30	-20	-10	0	10	20	30	40	50
		(°F)	-10	0	20	40	60	80	100	120	
Gasoline Engine Oil	GDI		0W-40, 5W-30, 5W-40								
	MPI *1		5W-20*2, 5W-30								
Diesel Engine Oil (1.7L)					15W-40						
					10W-30						
					5W-30						
			0W-30								

*1 For better fuel economy, it is recommended to use the engine oil of a viscosity grade SAE 5W-20*2 (API SM / ILSAC GF-4). However, if the engine oil is not available in your country, select the proper engine oil using the engine oil viscosity chart.

*2 In the Middle East, do not use the engine oil viscosity grade SAE 5W-20.

VEHICLE IDENTIFICATION NUMBER (VIN)

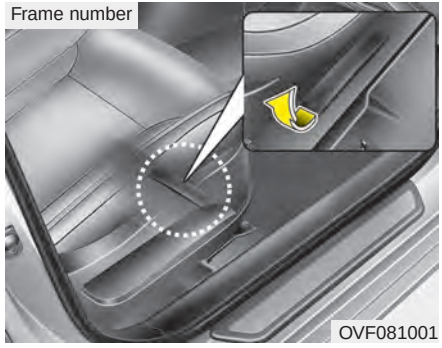

The vehicle identification number (VIN) is the number used in registering your vehicle and in all legal matters pertaining to its ownership, etc.

The number is punched on the floor under the passenger seat. To check the number, open the cover.

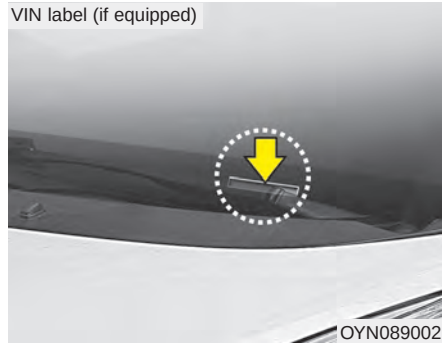

The VIN is also on a plate attached to the top of the dashboard. The number on the plate can easily be seen through the windshield from outside.

VEHICLE CERTIFICATION LABEL

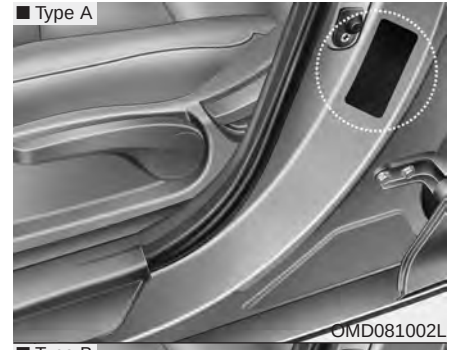

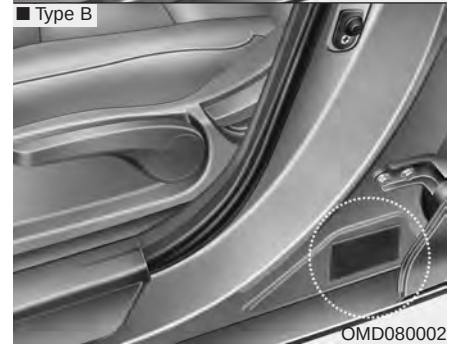

The vehicle certification label attached on the driver's (or front passenger's) side center pillar gives the vehicle identification number (VIN).

TIRE SPECIFICATION AND PRESSURE LABEL

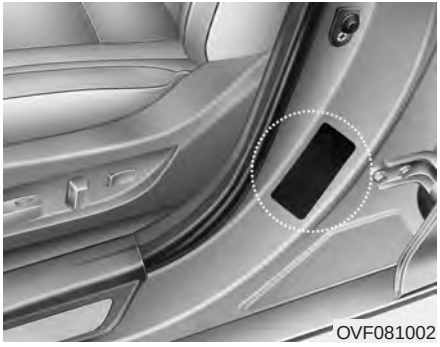

OVF081002

The tires supplied on your new vehicle are chosen to provide the best performance for normal driving.

The tire label located on the driver's side center pillar gives the tire pressures recommended for your vehicle.

ENGINE NUMBER

■ Gasoline engine (1.6L)

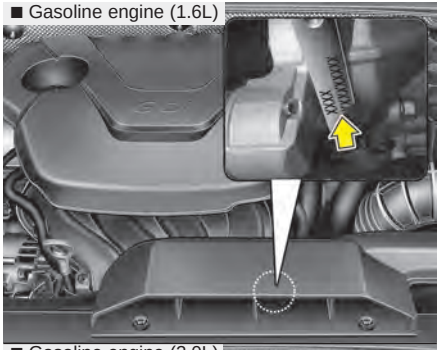

■ Gasoline engine (2.0L)

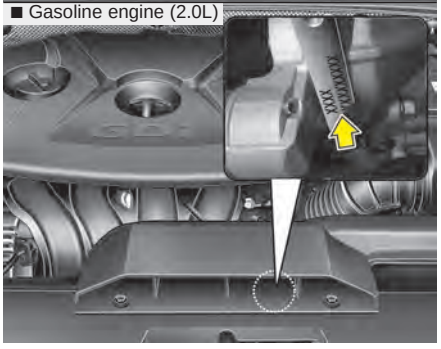

■ Diesel engine (1.7L)

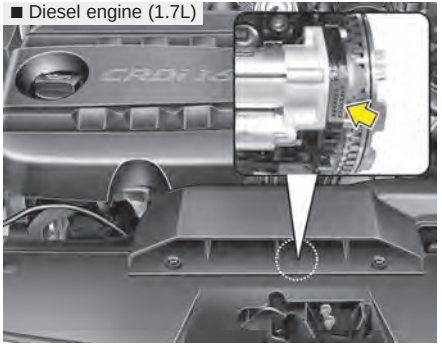

OVF081003/OVF081004/OVF081005

The engine number is stamped on the engine block as shown in the drawing.

E-MARK LABEL (FOR EUROPE) (IF EQUIPPED)

An E-mark label is located on the driver's side center pillar. The label certifies that your vehicle has satisfied the ECE Safety/Environment regulation. It contains the following information:

- Country code
- Regulation number
- Regulation amendment number
- Approval number

Index

I

A

AFLS (Adaptive Front Lighting System).....4-103
Air bag warning label 3-63
Air bag warning light.....3-43
Air bags.....3-40
Air bag warning label.....3-63
Air bag warning light 3-43
Curtain air bag.....3-54
Driver's and passenger's front air bag 3-48
Passenger’s front air bag ON indicator 3-44
Passenger’s front air bag ON/OFF switch 3-50
Side impact air bag.....3-53
SRS components and functions.....3-45
Air cleaner 7-51
Air ventilation seat.....3-11
Alarm system.....4-12
Anti-lock brake system (ABS) 5-39
Appearance care.....7-99
Exterior care 7-99
Interior care 7-104
Armrest 3-14
Ashtray.....4-140
Audio remote control.....4-154
Audio system 4-153
Audio remote control.....4-154
Roof antenna.....4-153
Auto defogging system.....4-135
Auto hold 5-36
Auto light/AFLS position 4-98
Automatic climate control system 4-121
Air conditioning 4-128
Automatic heating and air conditioning.....4-122
Climate control air filter.....4-131
Manual heating and air conditioning.....4-123
Automatic transaxle 5-22
Paddle shifter.....5-25
Shift lock system 5-26
Sports mode.....5-25
Automatic transaxle shift position indicator 4-52
Aux, USB and iPod 4-143

B

Barrier net 4-145
Battery.....7-58
Battery saver function.....4-96
Before driving.....5-3
Bottle holders, see cup holders.....4-141
Brake system.....5-29
Anti-lock brake system (ABS) 5-39
Auto hold.....5-36
Electric parking brake 5-31
Electronic stability program (ESP) 5-41

Emergency Stop Signal (ESS).....5-45
Hill-start assist control (HAC) 5-45
Power brakes 5-29
Vehicle stability management.....5-44
Brakes/clutch fluid.....7-48
Bulb replacement.....7-85
Bulb wattage 8-3
Button start/stop, see engine start/stop button.....5-8

C

Camera (Rear view).....4-94
Capacities (Lubricants).....8-5
Care
Exterior care 7-99
Interior care 7-104
Tire care.....7-61
Cargo security screen.....4-147
Center console storage.....4-136
Central door lock switch.....4-16
Certification label 8-8
Chains
Tire chains 5-70
Changing tires.....6-9
Checking tire inflation pressure.....7-63
Child restraint system 3-29
ISOFIX system 3-35
Seat belt 3-30
Tether anchor system.....3-33
Child-protector rear door lock 4-19
Cigarette lighter 4-140
Climate control air filter 4-120, 131
Climate control air filter 7-53
Clothes hanger 4-144
Combined instrument, see instrument cluster 4-48
Compact spare tire 6-14
Compact spare tire replacement 7-66
Cool box.....4-137
Coolant.....7-45
Cooling fluid, see engine coolant 7-45
Crankcase emission control system.....7-105
Cruise control system 5-48
Cup holder 4-141
Curtain air bag 3-54

D

Dashboard illumination, see instrument panel illumination .
.....4-49
Dashboard, see instrument cluster.....4-48
Daytime running light.....4-102
Deadlocks.....4-18
Defogging (Windshield) 4-133
Defroster (Rear window) 4-111

Defrosting (Windshield) 4-133
Dimensions 8-2
Display illumination, see instrument panel illumination 4-49
Displays, see instrument cluster 4-48
Door locks.....4-15
Central door lock switch 4-16
Child-protector rear door lock.....4-19
Deadlocks 4-18
Drinks holders, see cup holders.....4-141
Driver's and passenger's front air bag.....3-48
Driver's position memory system 4-39
Driving at night.....5-66
Driving in flooded areas 5-67
Driving in the rain 5-67

E

Easy access function.....4-40
Economical operation 5-63
Electric chromic mirror (ECM) 4-44
Electric parking brake.....5-31
Electric power steering 4-41
Electronic stability program (ESP).....5-41
E-mark label.....8-10
Emergency commodity 6-30
Emergency starting 6-5
Jump starting 6-5
Push starting 6-6
Emergency Stop Signal (ESS).....5-45
Emergency while driving.....6-3
Emission control system 7-105
Crankcase emission control system.....7-105
Evaporative emission control System 7-105
Exhaust emission control system 7-106
Engine 8-2
Engine compartment 2-8, 7-2
Engine coolant 7-45
Engine number.....8-9
Engine oil.....7-44
Engine overheats.....6-7
Engine start/stop button 5-8
Engine temperature gauge 4-50
Engine will not start.....6-4
Evaporative emission control System 7-105
Exhaust emission control system.....7-106
Explanation of scheduled maintenance items 7-41
Exterior care.....7-99
Exterior features
Mounting bracket for roof carrier 4-151

F

Flat tire (with spare tire) 6-8
Changing tires 6-9
Compact spare tire 6-14
Jack and tools 6-8
Removing and storing the spare tire 6-9
Flat tire (with tire mobility kit) 6-21
Floor mat anchor(s) 4-144
Fluid
Brakes/clutch fluid 7-48
Washer fluid 7-49
Fog light (front) 4-101
Fog light (rear) 4-101
Folding the rear seat 3-15
Front seat adjustment 3-5
Fuel filler lid 4-32
Fuel filter 7-50
Fuel gauge 4-51
Fuel requirements 1-2
Fuse switch 7-73
Fuses 7-71
Fuse switch 7-73
Fuse/relay panel description 7-75
Instrument panel fuse 7-72
Main fuse 7-74
Multi fuse 7-74

G

Gauge
Engine temperature gauge 4-50
Fuel gauge 4-51
Glove box 4-136
Glove box lamp 4-110

H

Hazard warning flasher 4-95
Hazardous driving conditions 5-65
Headlight (Headlamp) escort function 4-96
Headlight (Headlamp) welcome function 4-96
Headlight bulb replacement 7-85
Headlight leveling device 4-102
Headlight position 4-98
Headlight washer 4-107
Headrest(front) 3-8
Headrest(rear) 3-12
Heated steering wheel 4-42
High - beam operation 4-99
Height adjustment 3-20
Highway driving 5-67
Hill-start assist control (HAC) 5-45
Hood 4-30
Horn 4-43
How to use this manual 1-2

I

Icy road warning light 4-52
Indicator symbols on the instrument cluster 1-6
Indicators and warnings.....4-66
Inside rearview mirror 4-44
Instrument cluster 4-48
Automatic transaxle shift position indicator 4-52
Engine temperature gauge.....4-50
Fuel gauge 4-51
Icy road warning light 4-52
Instrument panel illumination 4-49
LCD display 4-53
Manual transaxle shift indicator.....4-52
Odometer 4-53
Outside temperature.....4-51
Speedometer 4-49
Tachometer 4-50
Tripmeter 4-53
User Settings.....4-56
Warning and indicators.....4-66
Instrument panel fuse.....7-72
Instrument panel illumination.....4-49
Instrument panel overview 2-2
Interior care.....7-104
Interior features.....4-140
Ashtray 4-140
Aux, USB and iPod 4-143
Barrier net.....4-145
Cargo security screen 4-147
Cigarette lighter.....4-140
Clothes hanger.....4-144
Cup holder 4-141
Floor mat anchor(s) 4-144
Luggage net (holder) 4-145
Luggage rail system.....4-149
Power outlet.....4-142
Sunvisor.....4-142
Interior light.....4-108
Glove box lamp 4-110
Luggage room lamp.....4-109
Map lamp.....4-108
Room lamp 4-109
Vanity mirror lamp 4-109
Interior overview 2-4
ISG (Idle stop and go) system 5-14
ISOFIX system 3-35

J

Jack and tools.....6-8
Jump starting.....6-5

K

Key positions 5-4
Keys 4-3

L

Label
Air bag warning label.....3-63
E-mark label 8-10
Tire sidewall labeling 7-67
Tire specification and pressure label.....8-9
Vehicle certification label.....8-8
Lane keeping assist system.....5-56
Lap/shoulder belt 3-20
LCD display.....4-53
Light bulbs.....7-85
Lighting.....4-96
AFLS (Adaptive Front Lighting System) 4-103
Auto light/AFLS position.....4-98
Battery saver function 4-96
Daytime running light 4-102
Front fog light.....4-101
Headlight (Headlamp) escort function 4-96
Headlight (Headlamp) welcome function 4-96
Headlight leveling device.....4-102
Headlight position 4-98
High - beam operation.....4-99
Parking light position 4-97
Rear fog light.....4-101
Smart cornering light.....4-97
Traffic change.....4-99
Turn signals 4-100
Lubricants and capacities.....8-5
Luggage net (holder) 4-145
Luggage rail system.....4-149
Luggage room lamp.....4-109
Luggage side partition 4-138
Luggage side tray.....4-138
Luggage tray 4-138

M

Main fuse 7-74
Maintenance
Explanation of scheduled maintenance items 7-41
Maintenance services.....7-5
Maintenance under severe usage conditions.....7-19,30,39
Normal maintenance schedule.....7-10,21,32
Owner maintenance 7-7

Scheduled maintenance service.....7-9
Tire maintenance 7-67
Maintenance schedule.....7-9
Maintenance under severe usage conditions.....7-19,30,39
Normal maintenance schedule.....7-10,21,32
Maintenance services.....7-5
Manual climate control system.....4-112
Air conditioning.....4-117
Climate control air filter.....4-120
Heating and air conditioning.....4-113
Manual transaxle.....5-19
Manual transaxle shift indicator.....4-52
Map lamp.....4-108
Memory system 4-39
Mirrors 4-44
Day/night rearview mirror.....4-44
Electric chromic mirror (ECM).....4-44
Inside rearview mirror.....4-44
Outside rearview mirror 4-45
Moonroof, see panorama sunroof.....4-35
Mounting bracket for roof carrier.....4-151
Multi fuse.....7-74

N

Non-powered tailgate.....4-20

O

Odometer 4-53
Oil (Engine) 7-44
Outside rearview mirror.....4-45
Outside temperature.....4-51
Overheats 6-7
Owner maintenance 7-7

P

Paddle shifter 5-25
Panorama sunroof 4-35
Parking light position.....4-97
Passenger’s front air bag ON indicator 3-44
Passenger’s front air bag ON/OFF switch.....3-50
Power brakes.....5-29
Power outlet 4-142
Power tailgate 4-21
Power window lock button.....4-29
Pre-tensioner seat belt.....3-23
Push starting.....6-6

R

Rear parking assist system.....4-79
Rear seat.....3-12

Rear seat floor pocket 4-139
Rear view camera 4-94
Recommended cold tire inflation pressures 7-61
Recommended lubricants and capacities 8-5
Recommended SAE viscosity number 8-7
Remote keyless entry 4-5
Replacement light bulb 7-85
Road warning 6-2
Rocking the vehicle 5-65
Roof antenna 4-153
Room lamp 4-109

S

Scheduled maintenance service 7-9
Maintenance under severe usage conditions 7-19,30,39
Normal maintenance schedule 7-10,21,32
Seat belt warning 3-19
Seat belts 3-18
Height adjustment 3-20
Lap/shoulder belt 3-20
Pre-tensioner seat belt 3-23
Seat belt warning 3-19
Seat warmer(front) 3-10
Seat warmer(rear) 3-14
Seatback pocket 3-12
Seats 3-2
Air ventilation seat 3-11
Armrest 3-14
Folding the rear seat 3-15
Front seat adjustment 3-5
Headrest(front) 3-8
Headrest(rear) 3-12
Rear seat 3-12
Seat warmer(front) 3-10
Seat warmer(rear) 3-14
Seatback pocket 3-12
Shift lock system 5-26
Side impact air bag 3-53
Smart cornering light 4-97
Smart key 4-9
Smooth cornering 5-66
Snow tires 5-69
Smart parking assist system 4-83
Spare tire
Compact spare tire 6-14
Compact spare tire replacement 7-66
Removing and storing the spare tire 6-9
Special driving conditions 5-65
Driving at night 5-66
Driving in flooded areas 5-67
Driving in the rain 5-67

Hazardous driving conditions.....5-65
Highway driving.....5-67
Rocking the vehicle.....5-65
Smooth cornering.....5-66
Speed limit control system.....5-53
Speedometer.....4-49
Sports mode.....5-25
SRS components and functions.....3-45
Starting difficulties, see engine will not start.....6-4
Steering wheel.....4-41
Electric power steering.....4-41
Heated steering wheel.....4-42
Horn.....4-43
Tilt steering.....4-42
Storage compartment.....4-136
Center console storage.....4-136
Cool box.....4-137
Glove box.....4-136
Luggage side partition.....4-138
Luggage side tray.....4-138
Luggage tray.....4-138
Rear seat floor pocket.....4-139
Sunglass holder.....4-137
Sunglass holder.....4-137
Sunroof, see panorama sunroof.....4-35
Sunvisor.....4-142

T

Tachometer.....4-50
Tailgate.....4-20
Non-powered tailgate.....4-20
Power tailgate.....4-21
Tether anchor system.....3-33
Theft-alarm system.....4-12
Tilt steering.....4-42
Tire chains.....5-70
Tire pressure monitoring system.....6-16
Tire rotation.....7-64
Tire specification and pressure label.....8-9
Tires and wheels.....7-61, 8-4
Checking tire inflation pressure.....7-63
Compact spare tire replacement.....7-66
Recommended cold tire inflation pressures.....7-61
Tire care.....7-61
Tire maintenance.....7-67
Tire replacement.....7-65
Tire rotation.....7-64
Tire sidewall labeling.....7-67
Tire traction.....7-67
Wheel alignment and tire balance.....7-65
Wheel replacement.....7-66
Towing.....6-26

Traffic change 4-99
Trailer towing 5-73
Transaxle
  Automatic transaxle.....5-22
  Manual transaxle 5-19
Tripmeter.....4-53
Turn signals.....4-100

U

User Settings.....4-56

V

Vanity mirror lamp.....4-109
Vehicle break-in process.....1-5
Vehicle certification label 8-8
Vehicle identification number (VIN).....8-8
Vehicle stability management.....5-44
Vehicle weight 5-82

W

Warning and indicators.....4-66
Washer fluid.....7-49
Weight/volume.....8-4
Welcome system 4-110
Wheel alignment and tire balance 7-65
Wheel replacement 7-66
Windows 4-26
  Power window lock button.....4-29
Windshield defrosting and defogging.....4-133
  Auto defogging system.....4-135
Windshield washers 4-106
Windshield wipers 4-105
Winter driving.....5-69
  Snow tires 5-69
  Tire chains 5-70
Wiper blades 7-55
Wipers and washers 4-104
  Headlight washer 4-107
  Windshield washers.....4-106
  Windshield wipers 4-105